FORM NO. 3312-442

TORO®

MODEL NO. 30790 - 50001 & UP
MODEL NO. 30562 - 50001 & UP
MODEL NO. 30555 - 50001 & UP
MODEL NO. 30560 - 50001 & UP

PARTS CATALOG

GROUNDSMASTER® 220

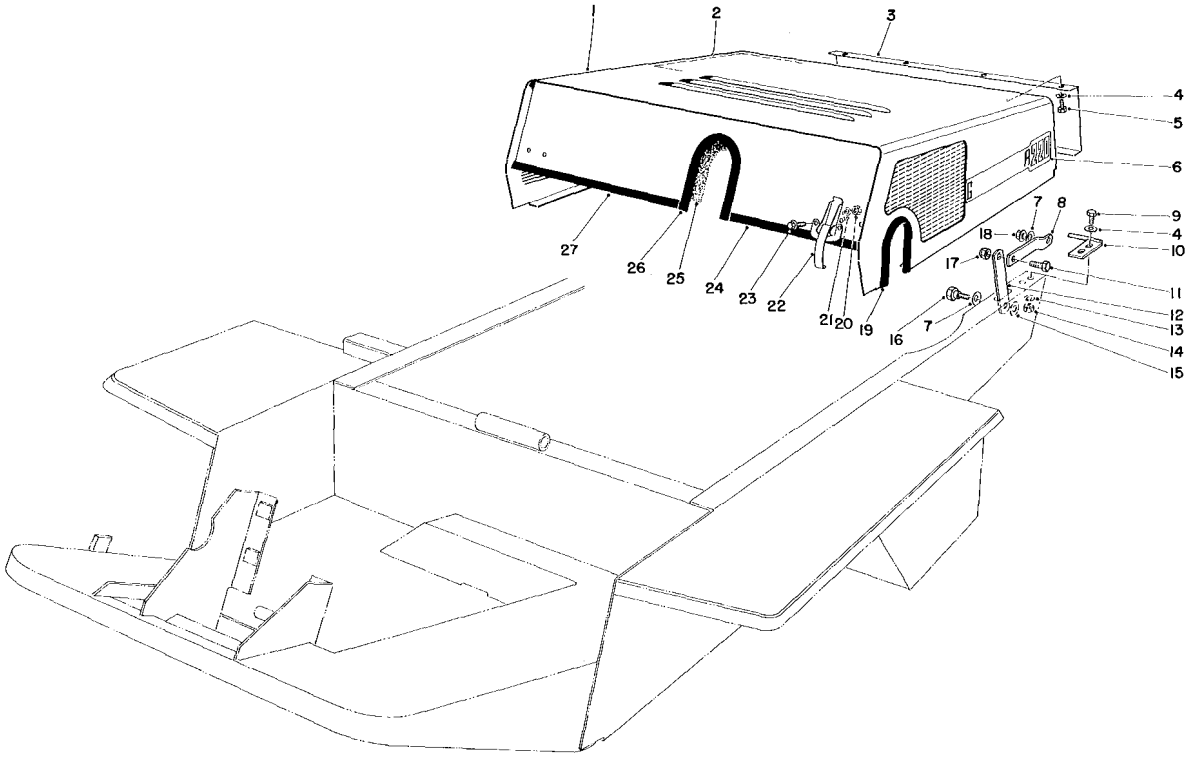

HOOD ASSEMBLY

Ref. No.	Part No.	Description	No. Used
1	44-9180	Hood	1
2	44-9040	Foam Strip – Hood (Rear)	1
3	44-8830	Grille – Rear Panel	1
4	3256-22	Washer	12
5	32140-16	Screw – Self Tapping Hex. Hd.	8
6	52-1470	Decal – Groundsmaster 220	2
7	3290-211	Washer – Lock Spring	4
8	27-6800	Link – Hood	2
9	321-4	Capscrew	4
10	27-4830	Pivot Pin L.H.	1
*	27-4800	Pivot Pin R.H.	1
11	3211-27	Screw – Cap Hex Hd.	2
12	27-6810	Tie – Hood	2
13	3253-3	Washer – Lock Spring	4
14	3217-5	Nut – Hex	4

*Not Illustrated

Ref. No.	Part No.	Description	No. Used
15	4-2390	Washer	2
16	19-1470	Shoulder Screw	2
17	3296-5	Nut – Lock	2
18	32128-19	Nut – Flange	2
19	44-9190	Hood Trim	1
20	3217-26	Nut – Hex	4
21	3253-17	Washer – Lock	4
22	249-21	Latch	2
23	3290-144	Screw – Machine Hex Slotted Hd.	4
24	46-3320	Hood Trim	1
25	44-9030	Foam Strip – Hood (Front)	1
26	38-4070	Hood Trim	1
27	38-4080	Hood Trim	1

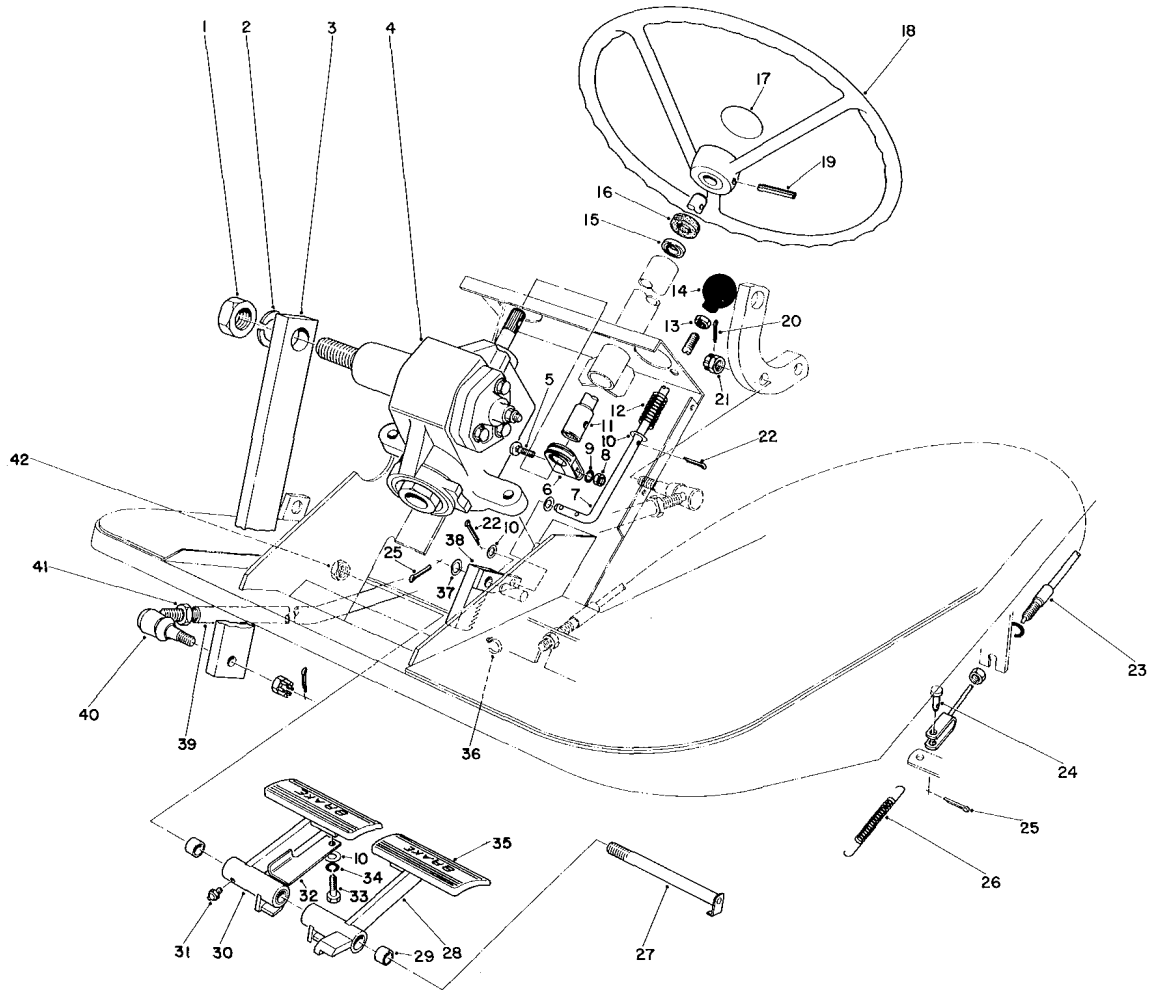

PEDALS AND STEERING WHEEL ASSEMBLY

Ref. No.	Part No.	Description	No. Used
1	3220-8	Nut	1
2	3253-28	Lockwasher	1
3	41-8880	Arm – Gear Box	1
4	41-8820	Steering Gear Assembly	1
5	3232-16	Bolt – Carriage	1
6	41-8830	Clamp – Coupling	1
7	27-3550	Rod – Brake Latch	1
8	3217-8	Nut – Hex	1
9	3253-6	Washer – Lock, Spring	1
10	3256-22	Washer – Plain Flat	4
11	41-8840	Steering Shaft	1
12	3-3251	Spring	1
13	3217-5	Nut – Hex	1
14	233-17	Knob	1
15	251-275	Bearing – Ball	1
16	21-9260	Dust Cover	1
17	24-2090	Cap – Steering Wheel	1
18	25-6260	Steering Wheel	1
19	32121-10	Pin – Roll	1
20	3272-7	Cotter Pin	2
21	32136-4	Slotted Nut	2
22	3272-5	Pin – Cotter	3
23	21-3370	Brake Cable Assembly	2

Ref. No.	Part No.	Description	No. Used
24	283-58	Pin – Clevis	2
25	3272-10	Pin – Cotter	3
26	3-7243	Spring – Return	2
27	42-2540	Pin – Brake	1
28	41-8810	Brake Pedal L.H. (Incl. Ref. #29 & 31)	1
29	256-42	Bushing	4
30	41-8800	Brake Pedal R.H. (Incl. Ref. #29 & 31)	1
31	302-5	Grease Fitting	2
32	27-3560	Latch – Parking Brake	1
33	329-4	Screw – Cap, Hex Hd.	1
34	3253-3	Washer – Lock Spring	1
35	7-3900	Foot Pad – Brake	2
36	3290-378	Plastic Ty-On	1
37	3256-26	Washer – Plain Flat	2
38	42-3220	Rack	1
39	27-3390	Tube – Front Steering	1
40	21-0140	Socket Assembly R.H. (Incl. Ref. #21)	2
41	3220-5	Nut – Hex Jam	2
42	3296-33	Nut – Lock, Nylon Insert	1

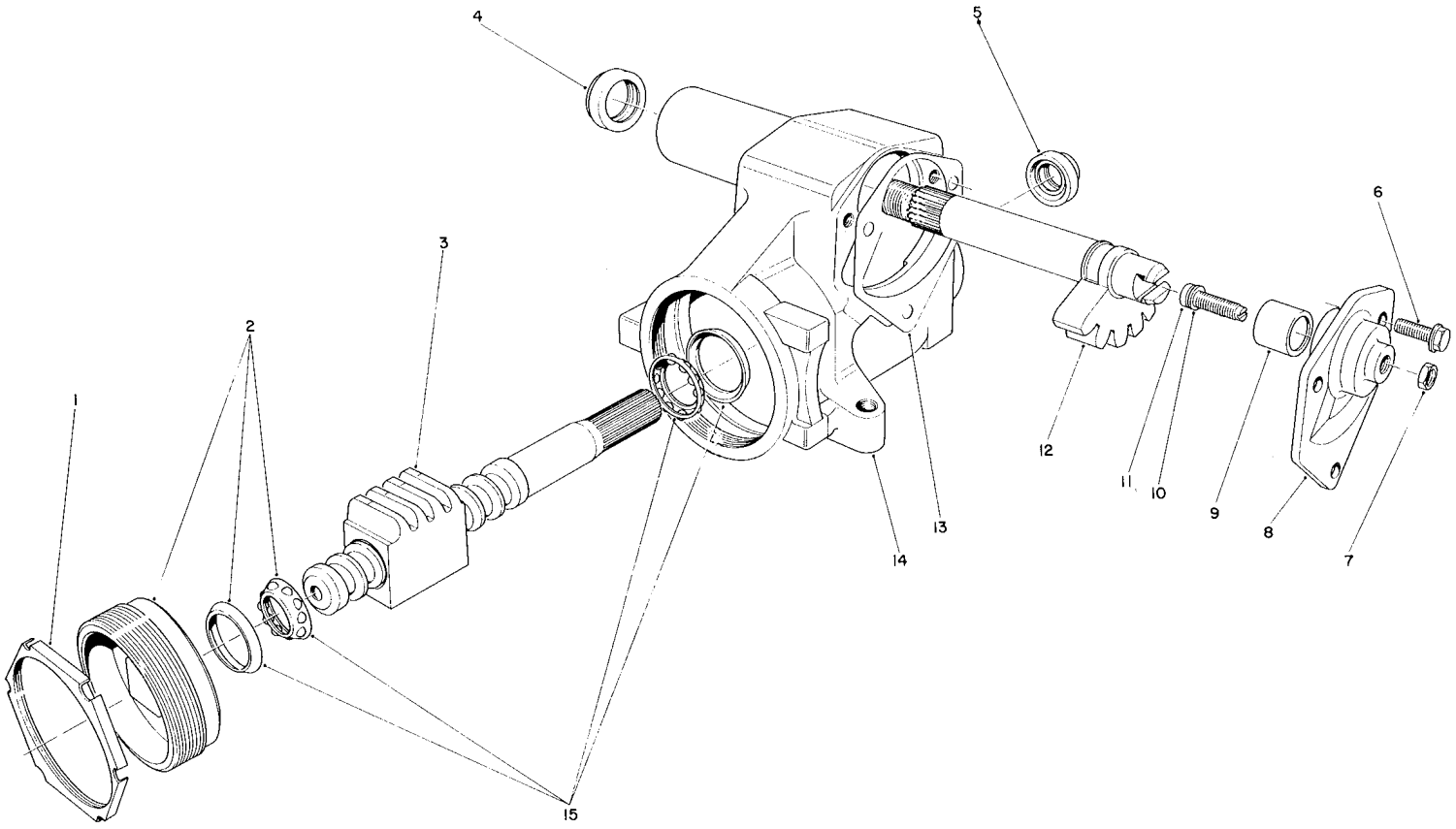

STEERING GEAR ASSEMBLY NO. 41-8820

Ref. No.	Part No.	Description	No. Used
1	5676217	Nut – Adjuster Lock	1
2	5666681	Adjuster Assembly	1
3	7812946	Worm Assembly – Steering	1
4	7801626	Seal	1
5	7802160	Seal	1
6	7807009	Hex Head Flange Bolt	3
7	114495	Nut	1
8	7806748	Side Cover Service Kit (Incl. Ref. #6, 9, 11 & 13)	1

Ref. No.	Part No.	Description	No. Used
9		Bushing	1
10	605142	Shim Kit	1
11	7802482	Adjuster	1
12	7812834	Gear – Pitman Shaft	1
13	5666734	Gasket	1
14	5679292	Steering Gear Housing	1
15	5666693	Bearing Assembly – Worm Thrust	1

Note: Obtain parts from your local GMC, Chevrolet Dealer.

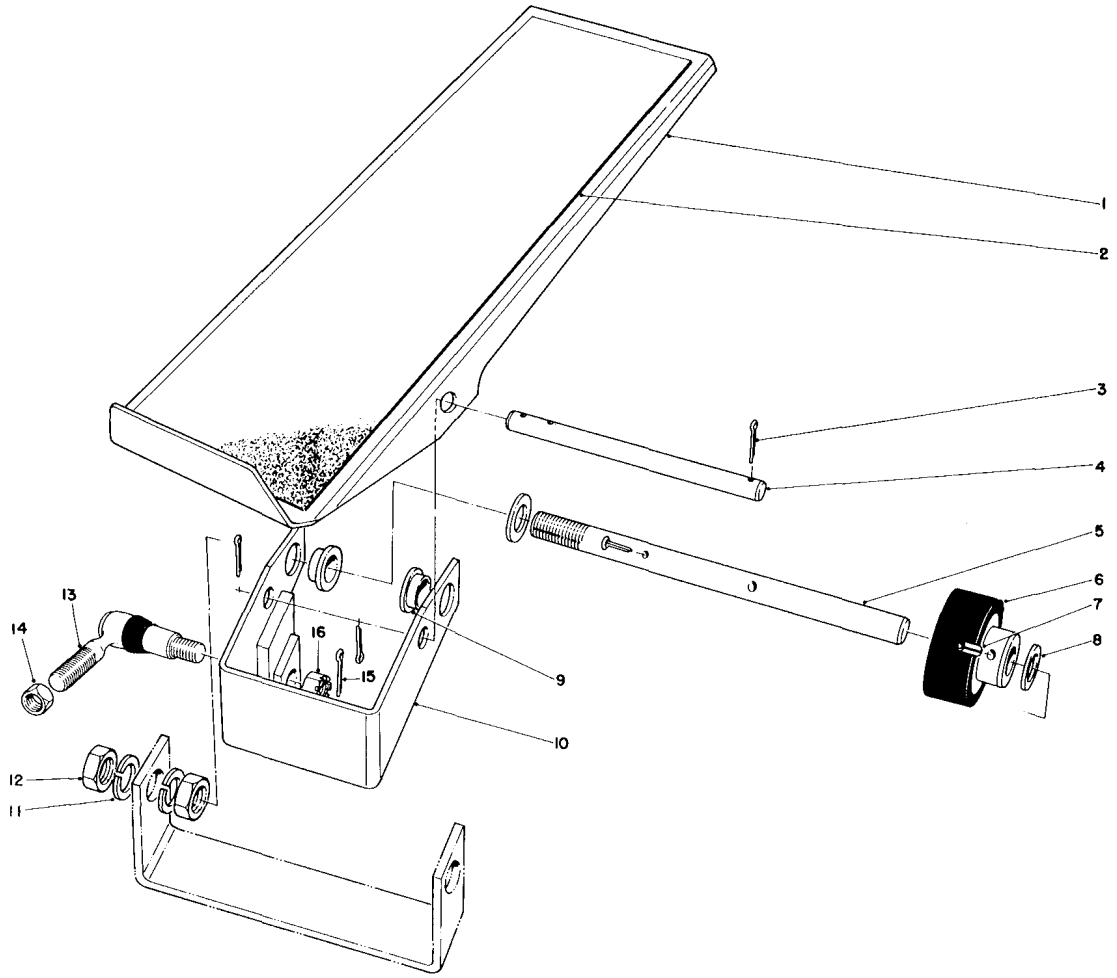

TRACTION PEDAL ASSEMBLY

Ref. No.	Part No.	Description	No. Used
1	29-5670	Traction Pedal	1
2	28-5130	Pad Pedal	1
3	3272-10	Cotter Pin	4
4	29-5630	Pivot Pin Pedal	1
5	29-5640	Shaft – Traction Pedal	1
6	28-5220	Friction Wheel Assembly	1
7	32121-16	Roll Pin	1
8	5-7570	Washer	2
9	256-156	Bushing	2

Ref. No.	Part No.	Description	No. Used
10	29-5600	Pivot Bracket Assembly (Incl. Ref. #9)	1
11	3253-7	Lockwasher	2
12	3218-5	Jam Nut	2
13	21-0140	Socket Assembly R.H. (Incl. Ref. #16)	1
14	3220-5	Jam Nut	1
15	3272-7	Cotter Pin	1
16	32136-4	Slotted Nut	1

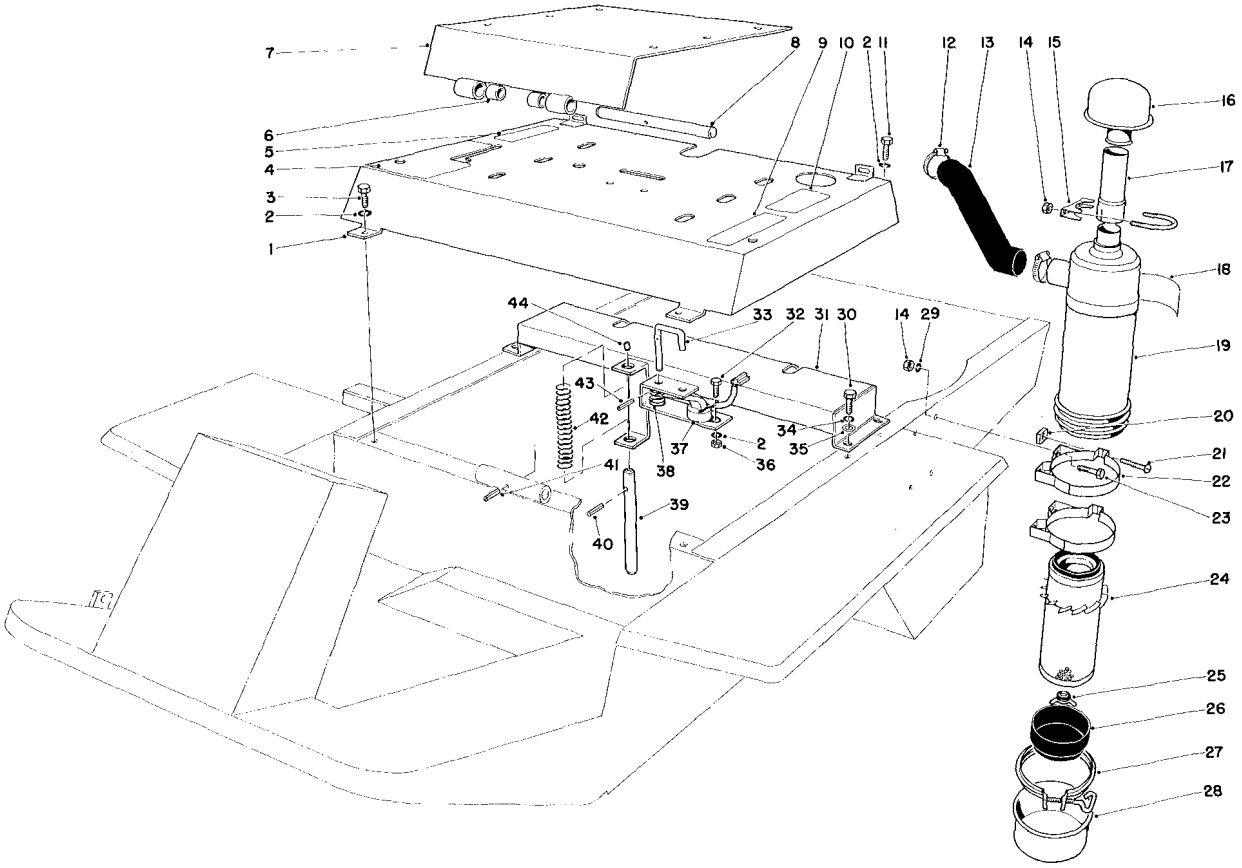

SEAT MOUNT AND AIR CLEANER ASSEMBLY

Ref. No.	Part No.	Description	No. Used
1	38-2470	Cover – Seat Support (Incl. Ref. #4, 5, 9 & 10)	1
2	3253-3	Washer – Lock Spring	5
3	32104-114	Screw – Self Tapping Hex. Hd.	2
4	27-4390	Decal – Hydraulic Lift	1
5	28-3290	Decal – Caution	1
6	256-173	Bushing	2
7	38-4020	Seat Mounting (Incl. Ref. #6)	1
8	27-4720	Shaft – Seat Pivot	1
9	27-4620	Decal – Caution	1
10	27-7310	Decal – Refueling	1
11	321-4	Capscrew	2
12	2412-42	Hose Clamp	2
13	44-9050	Hose – Air Cleaner Inlet	1
14	3217-6	Nut – Hex	6
15	20-4840	Muffler Clamp	1
16	27-7180	Cap Assembly	1
17	44-8950	Tube – Air Cleaner	1
18	27-7160	Decal – Instruction	1
19	27-7100	Air Cleaner Assembly (Incl. Ref. #18 & 24-28)	1
20	32107-11	Nut – Square	2
21	3258-19	Machine Screw	2

Ref. No.	Part No.	Description	No. Used
22	27-7170	Band Assembly Mounting (Incl. Ref. #20 & 21)	2
23	322-3	Screw – Cap Hex. Hd.	4
24	27-7110	Element Assembly	1
25	27-7120	Nut & Gasket Assembly	1
26	27-7140	Skirt – Baffle	1
27	27-7130	Clamp Assembly	1
28	27-7150	Cup Assembly	1
29	3253-4	Washer – Lock	4
30	323-5	Screw – Cap Hex Hd.	4
31	37-9770	Seat Support	1
32	321-2	Screw – Cap Hex. Hd.	1
33	38-3170	Pin – Seat Switch	1
34	3253-21	Washer – Lock	4
35	3256-24	Washer – Plain	4
36	3217-5	Nut – Hex	1
37	29-6930	Switch Arm	1
38	3-6685	Spring	1
39	27-9870	Pin – Seat Switch	1
40	32121-6	Pin – Roll	1
41	32121-4	Pin – Roll	1
42	37-9590	Spring	1
43	32121-50	Pin – Roll	1
44	28-6180	Pin – Plastic	1

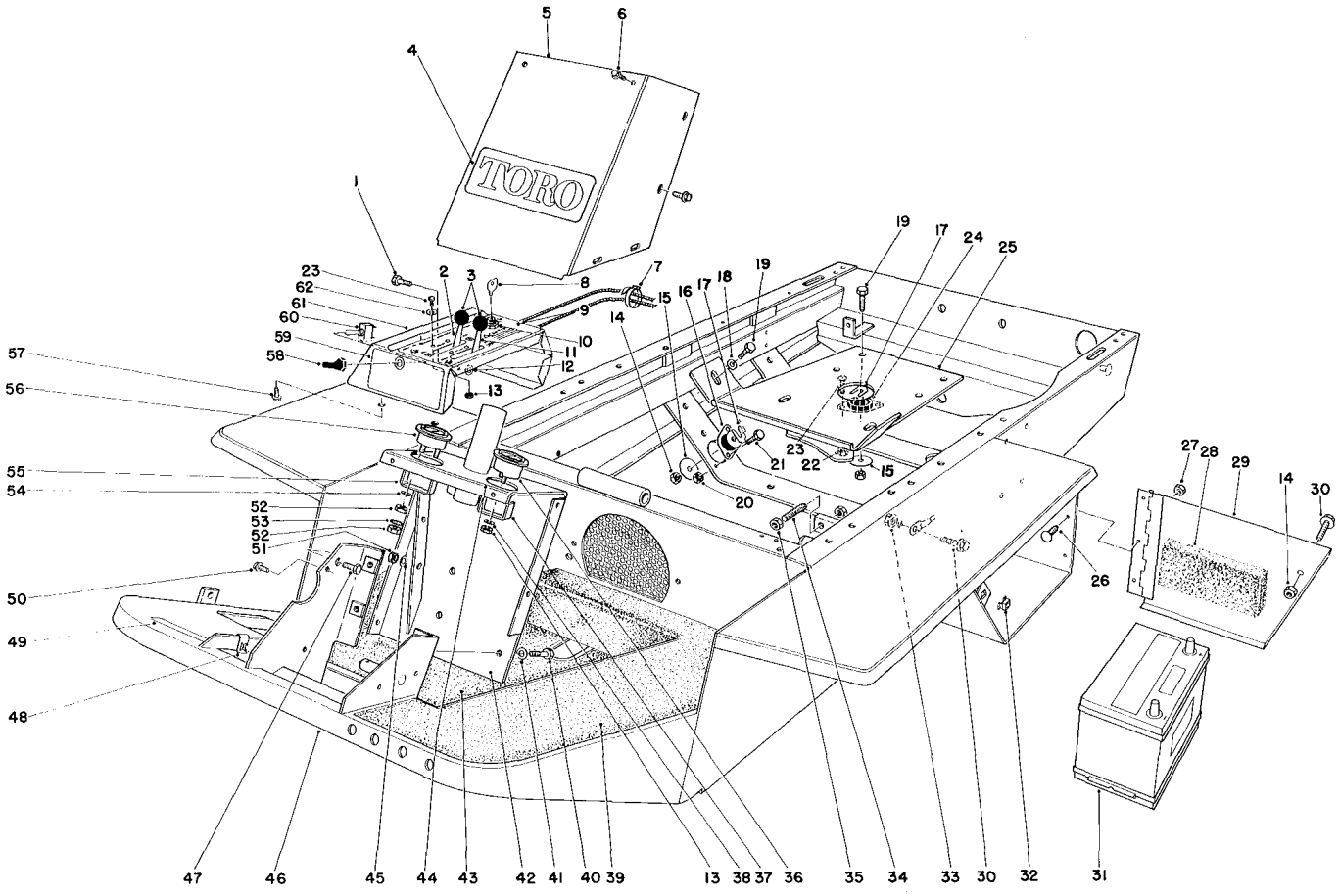

INSTRUMENT PANEL AND STEERING POST ASSEMBLY

Ref. No.	Part No.	Description	No. Used
1	321-4	Capscrew	1
2	44-9300	Control – Choke	1
3	233-35	Knob	2
4	43-5110	Decal – Toro	1
5	41-8900	Cover – Steering Tower	1
6	46-8560	Screw – Tapping Hex Hd.	11
7	3290-378	Plastic Ty-on	1
8	218-412	Key (Set of 2)	1
9	44-9370	Decal – Instrument Panel	1
10	27-2360	Switch – Ignition	1
11	44-9250	Control Throttle	1
12	3256-22	Washer – Plain Flat	1
13	3217-26	Nut – Hex	5
14	3296-39	Nut – Lock Nylon Insert	5
15	28-1140	Washer	4
16	44-9390	Mount – Engine Rubber	2
17	42-6080	Shim – Axle	A/R
18	3256-24	Washer – Plain Flat	2
19	323-12	Screw – Cap Hex Hd.	4
20	3296-29	Nut – Lock Nylon Insert	4
21	322-3	Capscrew	4
22	3296-2	Nut – Lock Nylon Insert	4
23	3251-3	Screw – Machine Rd. Hd.	8

Ref. No.	Part No.	Description	No. Used
24	18-8000	Rubber Mount	2
25	44-9320	Engine Base	1
26	3274-31	Screw – Cap Button Hd.	3
27	3296-42	Nut – Lock Nylon Insert	3
28	44-9460	Foam Strip – Battery Cover	1
29	44-8920	Battery Cover	1
30	3234-11	Screw – Cap Hex Hd. w/Locking Flange	2
31†		Battery Assy.	1
32	3290-433	Retainer – Grip Nut	1
33	3290-357	Nut – Hex Hd. w/Locking Flange	1
34	27-6940	Pin – Stop	1
35	3218-3	Nut – Hex, Jam	2
36	12-9990	Hour Meter	1
37	218-515	Mounting Bracket	1
38	3254-1	Washer – External Tooth	1
39	27-3250	Nonskid – Tunnel	1
40	324-6	Screw – Cap Hex Hd.	3
41	3253-6	Washer – Lock, Spring	3
42	42-2580	Steering Post Bracket	1
43	27-3260	Nonskid Floor	1
44	41-8910	Decal – Instruction	1

†Obtain Locally

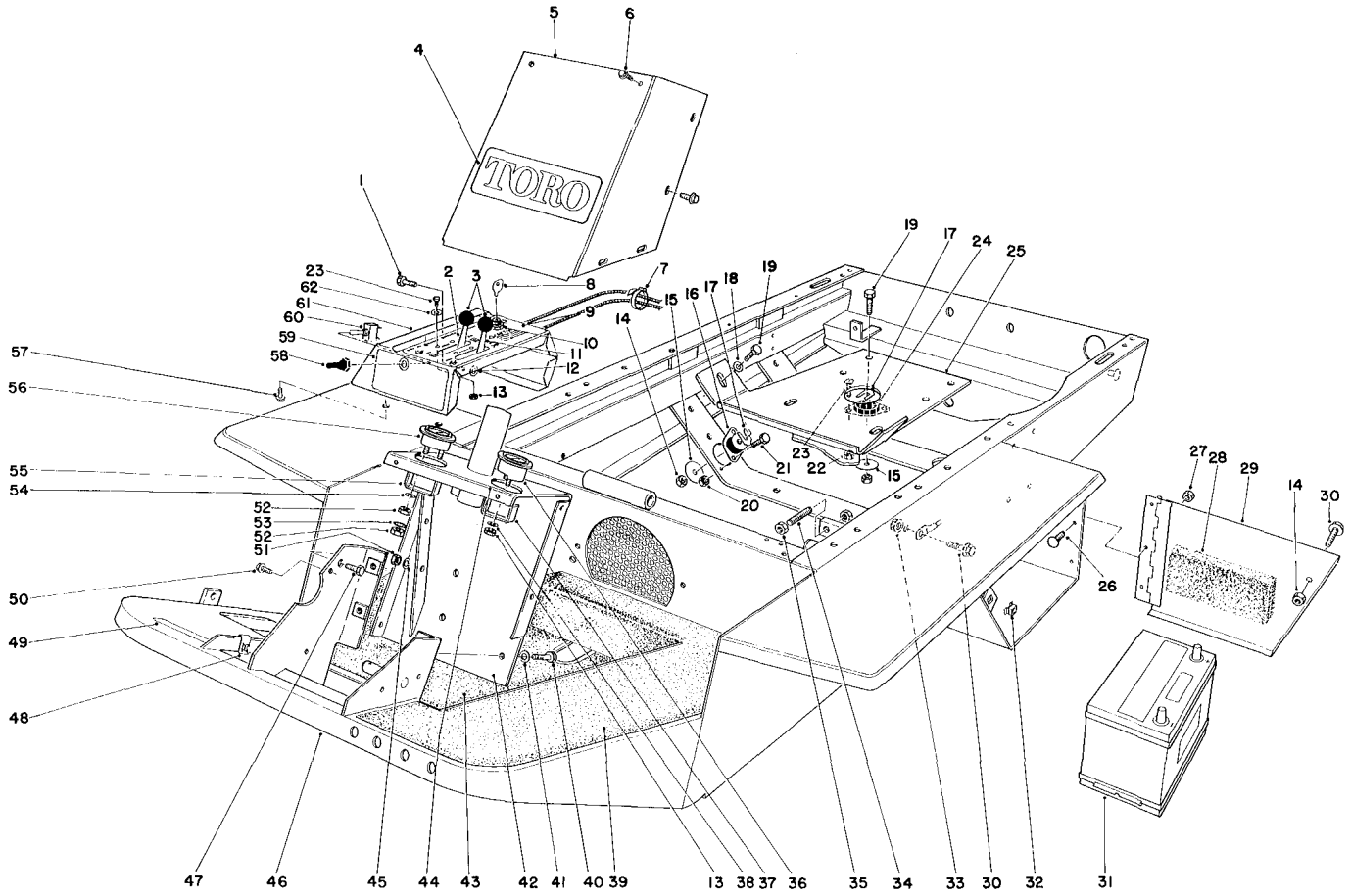

INSTRUMENT PANEL AND STEERING POST ASSEMBLY (Continued)

Ref. No.	Part No.	Description	No. Used
45	3253-21	Washer – Lock Spring	1
46	44-9170	Frame	1
47	323-5	Screw – Cap, Hex Hd.	1
48	3290-192	Nut – Clip, U-Type	2
49	27-7320	Decal – Traction Pedal	1
50	32104-60	Screw – Self Tapping Hex Washer Hd.	1
51	3217-7	Nut – Hex	1
52	3219-14	Nut – Brass	6
53	3254-8	Lockwasher	2

Ref. No.	Part No.	Description	No. Used
54	3256-21	Washer	2
55	39-9600	Mounting Clamp	1
56	33-0990	Ammeter	1
57	32104-116	Screw – Self Tapping Hex Washer Hd.	2
58	218-473	Boot – Toggle Switch	1
59	46-3460	Decal – By-Pass	1
60	6-1659	Switch – Toggle (Incl. Ref. #58)	1
61	46-3350	Instrument Panel	1
62	3253-17	Washer – Lock Spring	4

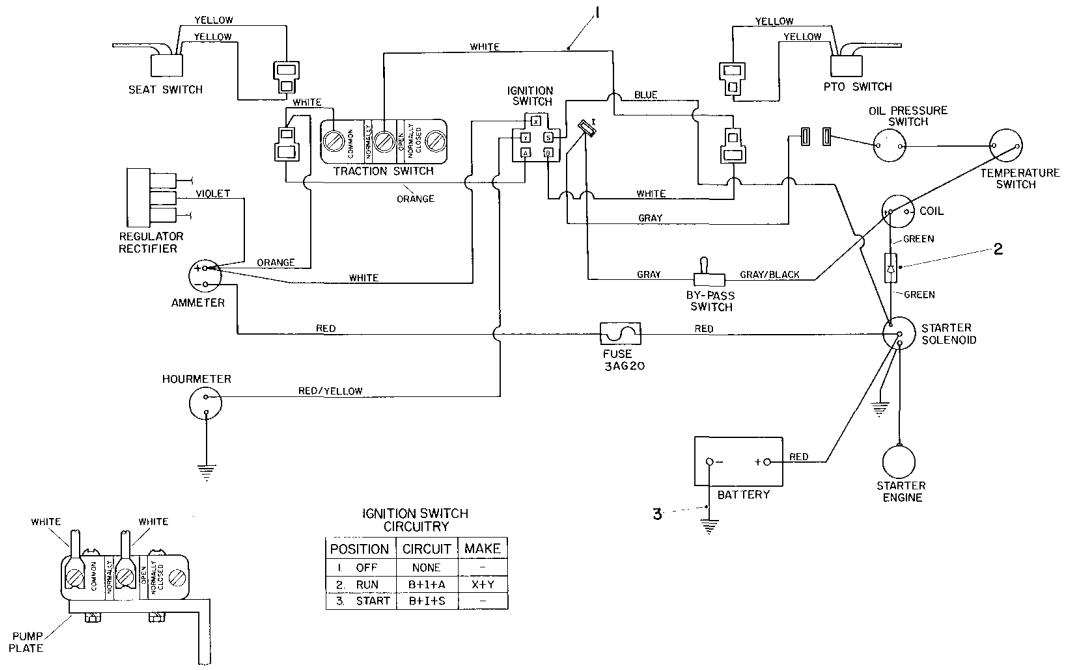

IGNITION SWITCH CIRCUITRY

POSITION	CIRCUIT	MAKE
1. OFF	NONE	–
2. RUN	B+I+A	X+Y
3. START	B+I+S	–

ELECTRICAL SCHEMATIC

Ref. No.	Part No.	Description	No. Used
1	44-9430	Wire Harness (Incl. Ref. # 2)	1
2	44-9930	Jumper Wire Ass'y	1

Ref. No.	Part No.	Description	No. Used
3	27-5090	Wire Battery Ground	1

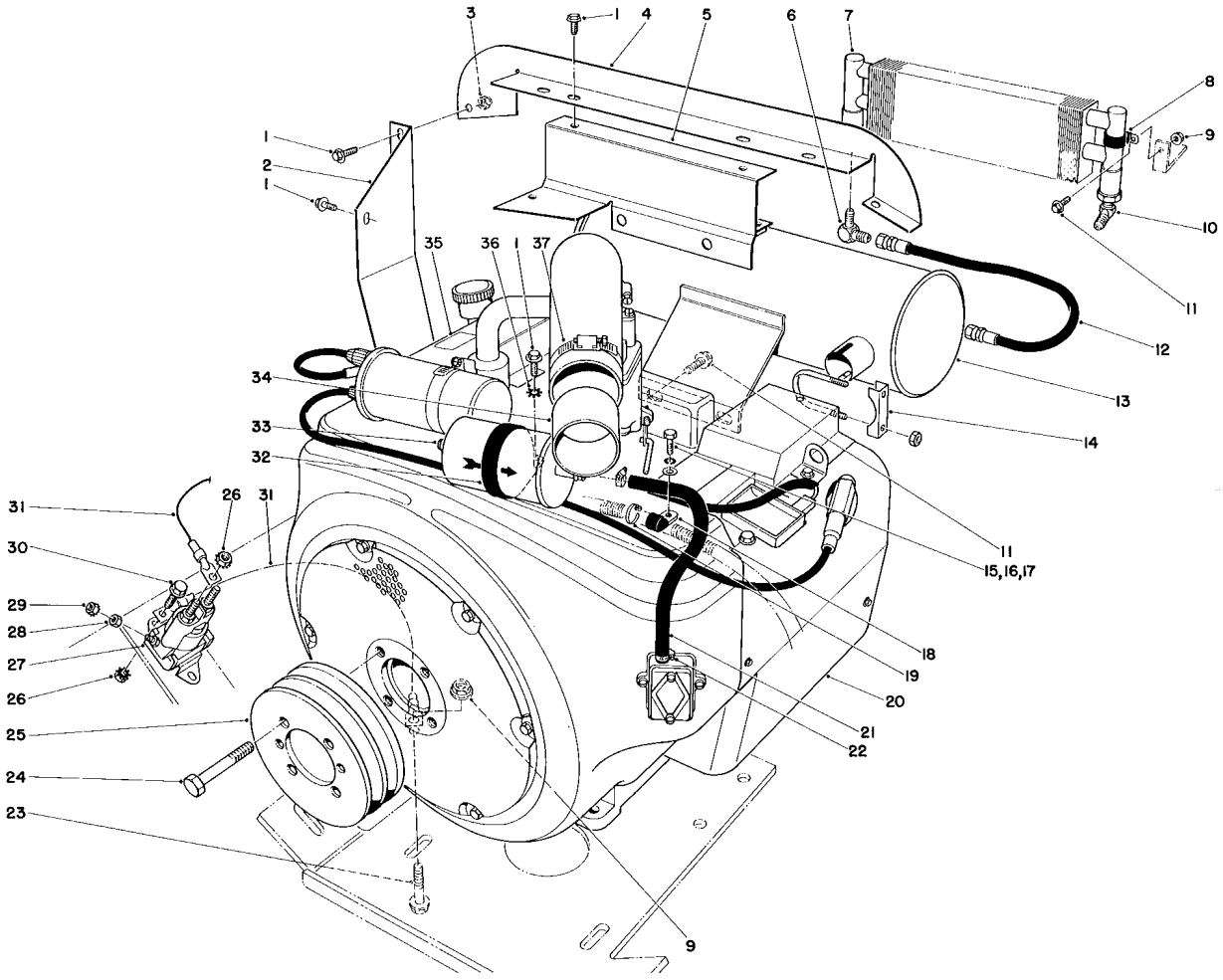

ENGINE ASSEMBLY

Ref. No.	Part No.	Description	No. Used
1	3234-13	Screw – Cap Hex Hd. Flange	11
2	44-8690	Shield – Engine Heat	1
3	3296-16	Nut – Lock, Nylon Insert	1
4	44-8710	Shroud – Engine	1
5	44-9010	Bracket – Shield Support	1
6	353-428	Elbow – Male 90°	1
7	22-7320	Oil Cooler	1
8	2412-39	Clamp – R	2
9	3290-357	Nut – Hex Hd. w/Locking Flange	4
10	353-714	Elbow – Male 45°	1
11	3234-11	Screw – Cap, Hex Hd. w/Locking Flange	4
12	44-9020	Hose Assembly – Oil	1
13	44-8960	Muffler	1
*	46-2390	Muffler – Spark Arrestor (Optional)	1
14	2412-37	Clamp – Muffler	2
15	321-4	Capscrew	1
16	3253-3	Washer – Lock Spring	1
17	3256-22	Washer – Plain, Flat	1
18	2412-81	Clamp – R	1
19	3290-336	Tie Cable	1

*Not Illustrated

Ref. No.	Part No.	Description	No. Used
20	221-765	Engine (Onan Model No. B48G-GA020 Type No. 4139F	1
21	44-9060	Line – Fuel	1
22	2412-36	Hose Clamp	2
23	3234-18	Screw – Cap Hex Hd. w/Locking Flange	2
24	322-40	Screw – Cap, Hex Hd.	4
25	43-5340	Pulley – Engine	1
26	32149-2	Nut – Lock	4
27	44-9380	Solenoid Starter	1
28	3219-14	Nut – Hex	1
29	32149-8	Nut – Lock	1
30	3234-4	Screw – Cap Hex Hd. w/Locking Flange	2
31	10-7160	Wire Assembly	2
32	2412-44	Clamp – Filter	1
33	18-1520	Filter Gas	1
34	44-9450	Adapter – Air Inlet	1
35	42-4180	Decal – Head Service	1
36	3255-8	Washer – Lock, External Tooth	2
37	2412-42	Hose Clamp	1

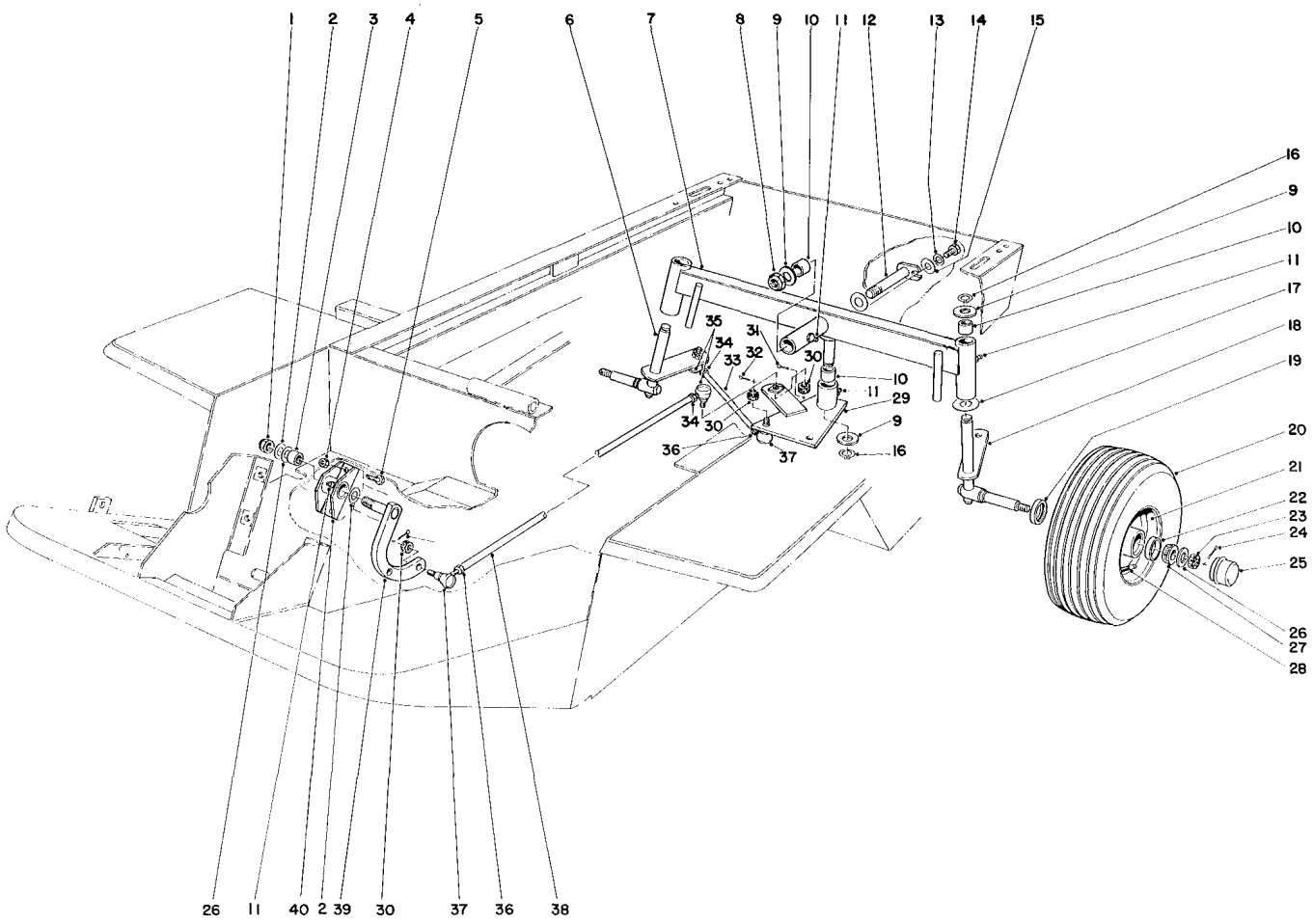

REAR AXLE ASSEMBLY

Ref. No.	Part No.	Description	No. Used
1	3296-15	Nut – Lock	1
2	3-6514	Washer – Thrust	2
3	252-6	Bearing	2
4	3296-44	Locknut	2
5	323-5	Screw – Cap, Hex. Hd.	2
6	39-8900	Spindle R.H.	1
7	44-9090	Rear Axle (Incl. Ref. #10 & 11)	1
8	3296-49	Nut – Lock, Nylon Insert	1
9	10-8110	Washer	4
10	3-0348	Bushing	8
11	302-5	Grease Fitting	4
12	27-4060	Pin – Rear Axle	1
13	3253-3	Lockwasher	1
14	321-2	Capscrew	1
15	3256-22	Washer – Plain, Flat	1
16	32151-36	Ring – Retaining Ext.	3
17	256-121	Bushing	2
18	39-8850	Spindle L.H.	1
19	253-129	Oil Seal	2
20	231-104	Tire	2
*	232-39	Inner Tube (Optional)	2
21	217-108	Rim (Incl. Ref. #22)	2
22	254-72	Bearing Cup	4

Ref. No.	Part No.	Description	No. Used
23	32136-5	Nut – Hex, Castle	2
24	3272-13	Cotter Pin	2
25	241-119	Dust Cap	2
26	3256-28	Washer – Plain, Flat	3
27	254-94	Bearing Cone	4
28	232-35	Valve Stem w/Cap	2
29	44-9120	Steering Plate (Incl. Ref. #10 & 11)	1
30	32136-4	Slotted Nut	6
31	3272-7	Cotter Pin	2
32	3272-6	Cotter Pin	4
33	27-4090	Tie Rod – Steering	2
34	3220-12	Nut – Hex Jam	3
35	21-0150	Socket Assembly L.H. (Incl. Ref. #30)	3
36	3220-5	Nut – Hex Jam	3
37	21-0140	Socket Assembly R.H. (Incl. Ref. #30)	3
38	44-9110	Tube – Rear Steering	1
39	27-5230	Pivot Arm	1
40	27-3640	Pivot Mount (Incl. Ref. #3 & 11)	1

*Not Illustrated

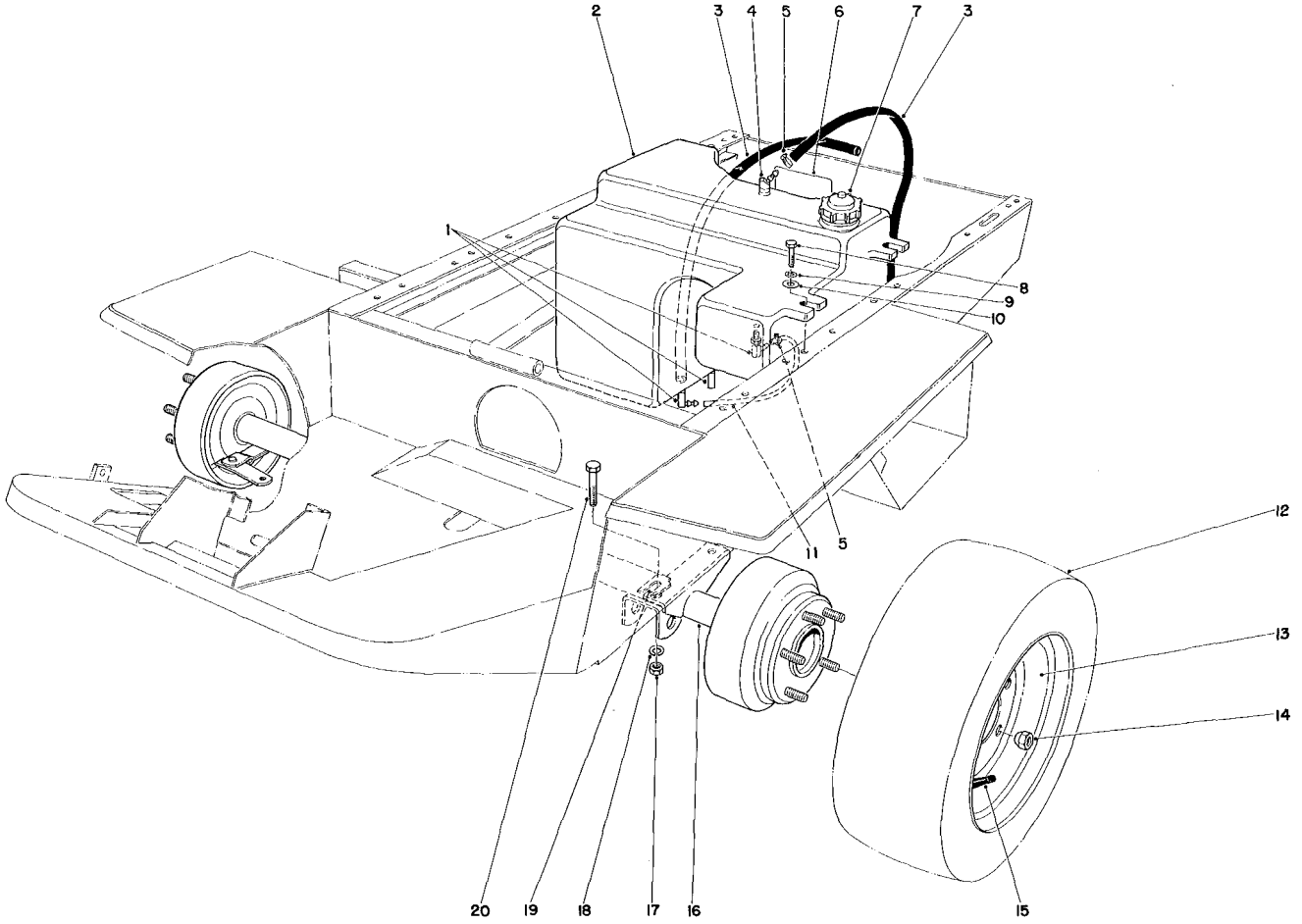

GAS TANK AND AXLE ASSEMBLY

Ref. No.	Part No.	Description	No. Used
1	353-536	90° Elbow	3
2	43-5350	Gas Tank (Incl. Ref. # 1 & 3)	1
3	37-9920	Hose	2
4	353-705	45° Elbow	1
5	2412-36	Clamp – Worm Drive	5
6	43-8480	Decal – Danger	1
7	37-9540	Gas Cap	1
8	323-19	Screw – Cap, Hex Hd.	3
9	3253-21	Lockwasher	3
10	3256-41	Washer – Plain	3
11	27-5370	Gas Line – Tank Connection	1

Ref. No.	Part No.	Description	No. Used
12	231-103	Tire	2
13	217-107	Rim	2
14	242-35	Nut – Hex	10
15	232-35	Valve Stem w/Cap	2
16	43-9040	Axle Assembly	1
17	3217-8	Nut – Hex	4
18	3253-6	Washer – Lock	4
19	42-6080	Shim Axle	A/R
20	324-9	Screw – Cap, Hex Hd.	4
*	232-43	Inner Tube (Optional)	2

* Not Illustrated

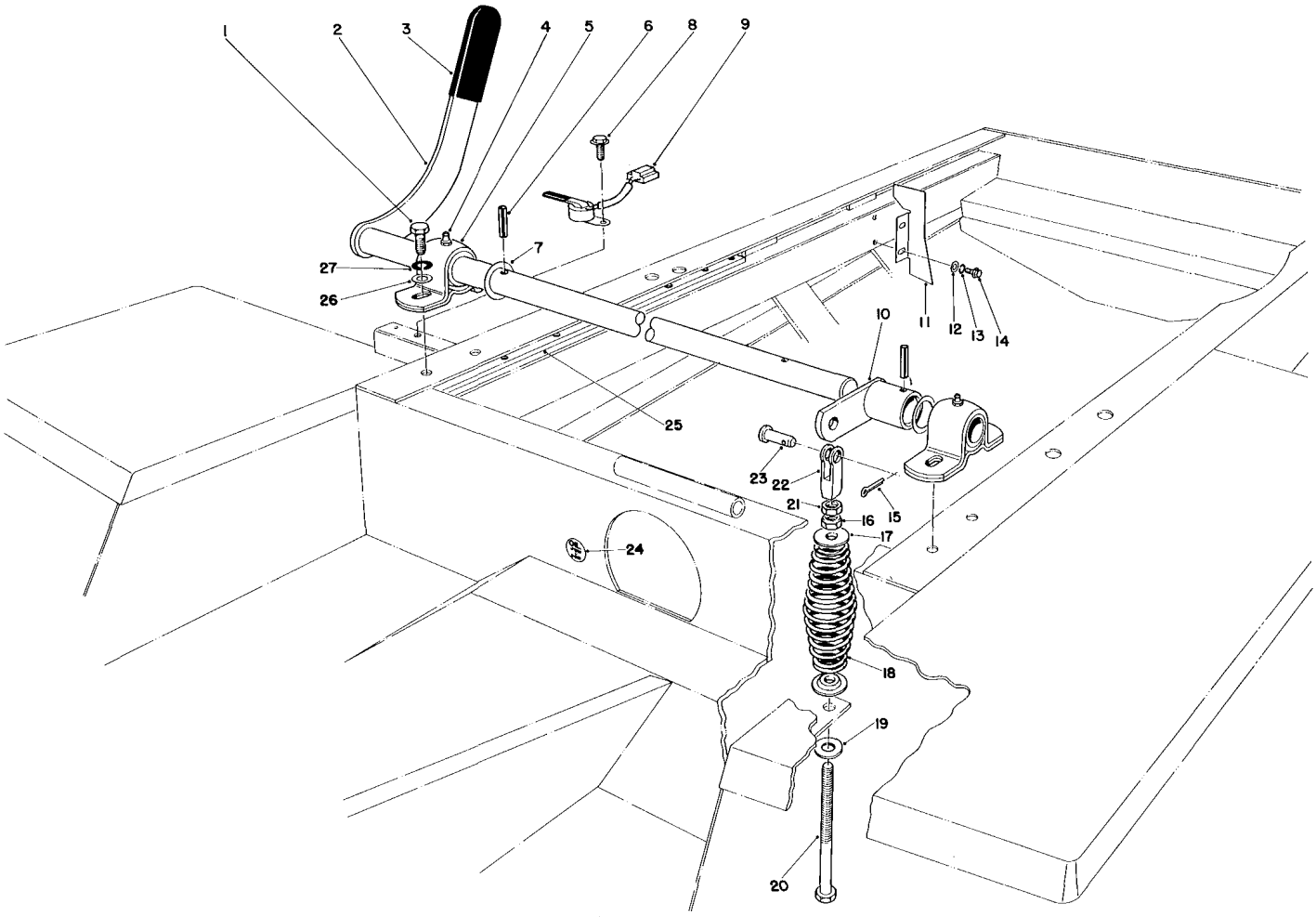

POWER TAKE OFF LEVER ASSEMBLY

Ref. No.	Part No.	Description	No. Used
1	321-4	Capscrew	4
2	27-4910	Power Take Off Lever	1
3	21-1880	Grip Handle	1
4	302-5	Grease Fitting	2
5	251-269	Bearing – Pillow Block	2
6	32121-31	Pin – Roll	2
7	3-6514	Washer	2
8	32104-116	Screw – Self Tapping Hex Washer Hd.	1
9	29-6930	Switch Arm	1
10	47-4780	Engagement Arm	1
11	44-8680	Shield – Heat	1
12	3256-23	Washer – Plain	2
13	3253-4	Washer – Lock Spring	2

Ref. No.	Part No.	Description	No. Used
14	32144-11	Screw – Self Tapping Hex Hd.	2
15	3272-5	Cotter Pin	1
16	3296-5	Nut – Lock	1
17	44-8890	Retainer – Spring	2
18	44-8820	Spring – Compression	1
19	3256-41	Washer – Plain	1
20	27-7900	Screw – Adjusting	1
21	3220-3	Nut – Hex Jam	1
22	282-1	Yoke	1
23	283-42	Pin – Clevis	1
24	11-6350	Decal – Oil	1
25	37-7060	Bar – Frame Rail	2
26	3256-22	Washer – Plain	4
27	3253-3	Washer – Lock Spring	4

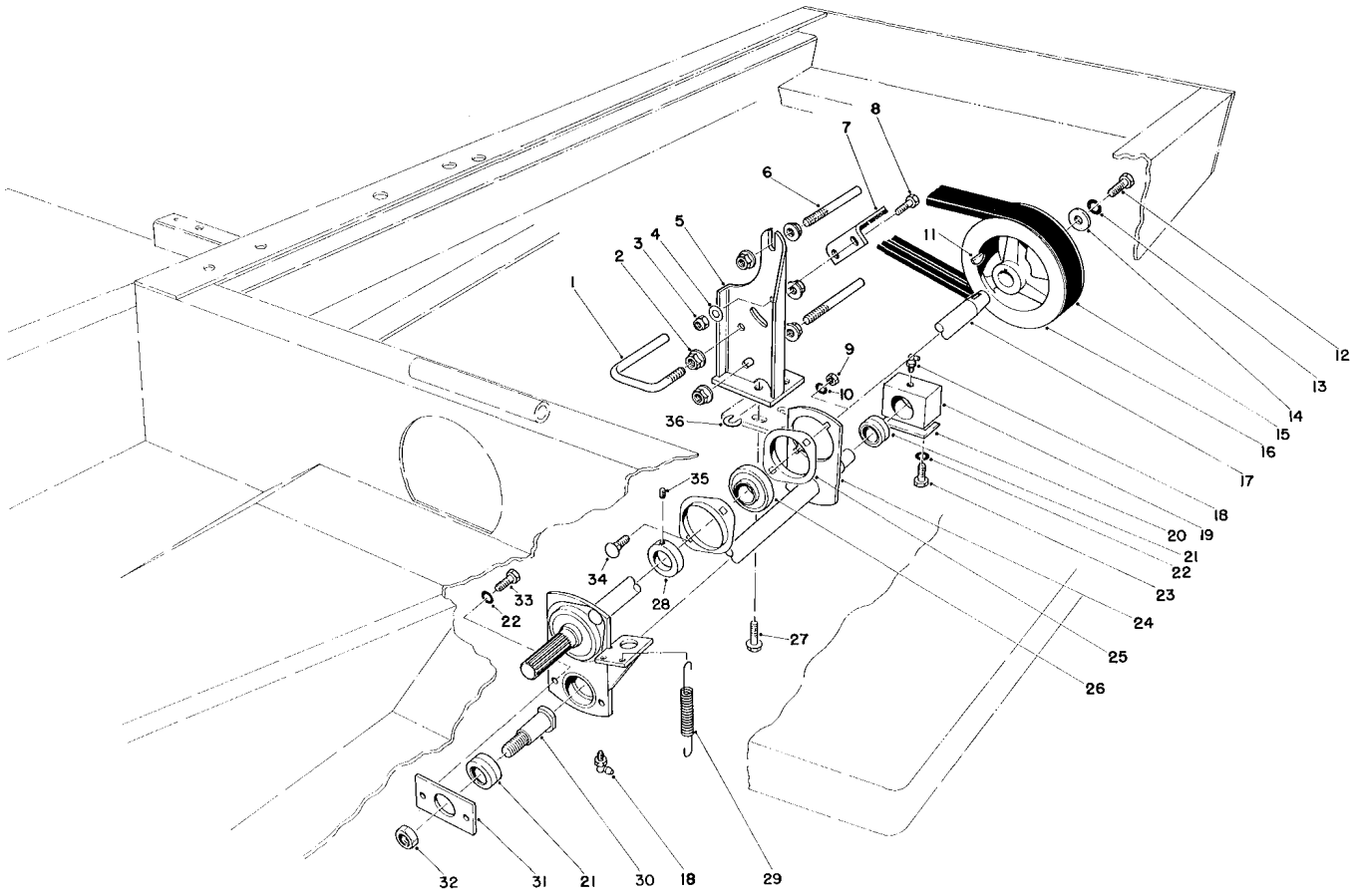

POWER TAKE OFF ASSEMBLY

Ref. No.	Part No.	Description	No. Used
1	44-9220	Guide – Belt, Power Take Off (Lower)	1
2	3290-357	Nut – Hex Hd. w/Locking Flange	6
3	3296-29	Nut – Lock, Nylon Insert	2
4	3256-23	Washer	2
5	44-9310	Bracket – Power Take Off Brake	1
6	44-9230	Guide – Belt Power Take Off	2
7	44-9330	Support Pad Assembly – Power Take Off Brake	1
8	322-4	Screw – Cap Hex Hd.	2
9	3217-6	Nut – Hex	4
10	3253-4	Washer – Lock, Spring	4
11	3257-5	Key – Woodruff	1
12	323-18	Screw – Cap, Hex Hd.	1
13	3253-21	Washer – Lock, Spring	1
14	29-4730	Washer – Power Take Off	1
15	44-8990	V-Belt – Torque Team	1
16	43-5320	Pulley – Power Take Off	1
17	27-4980	Shaft – Power Take Off	1

Ref. No.	Part No.	Description	No. Used
18	302-40	Grease Fitting	2
19	28-9050	Hub – Bearing	1
20	47-4760	Shim – P.T.O. Block	1
21	251-268	Bearing	2
22	3253-3	Washer – Lock Spring	4
23	321-7	Screw – Cap, Hex Head	2
24	44-9350	Engagement Arm	1
25	251-255	Flange Bearing	4
26	251-253	Bearing w/Collar (Incl. Ref. #28 & 35)	2
27	3234-11	Screw – Cap, Hex Hd.	3
28	251-77	Locking Collar	2
29	28-8950	Spring – Extrusion	2
30	27-6970	Stud – Bearing	1
31	27-6650	Retainer – Bearing	1
32	3296-33	Nut – Lock Nylon Insert	1
33	321-3	Screw – Cap Hex Hd.	2
34	3230-16	Carriage Bolt	4
35	3245-1	Set Screw	2
36	28-5640	Washer – Special	A/R

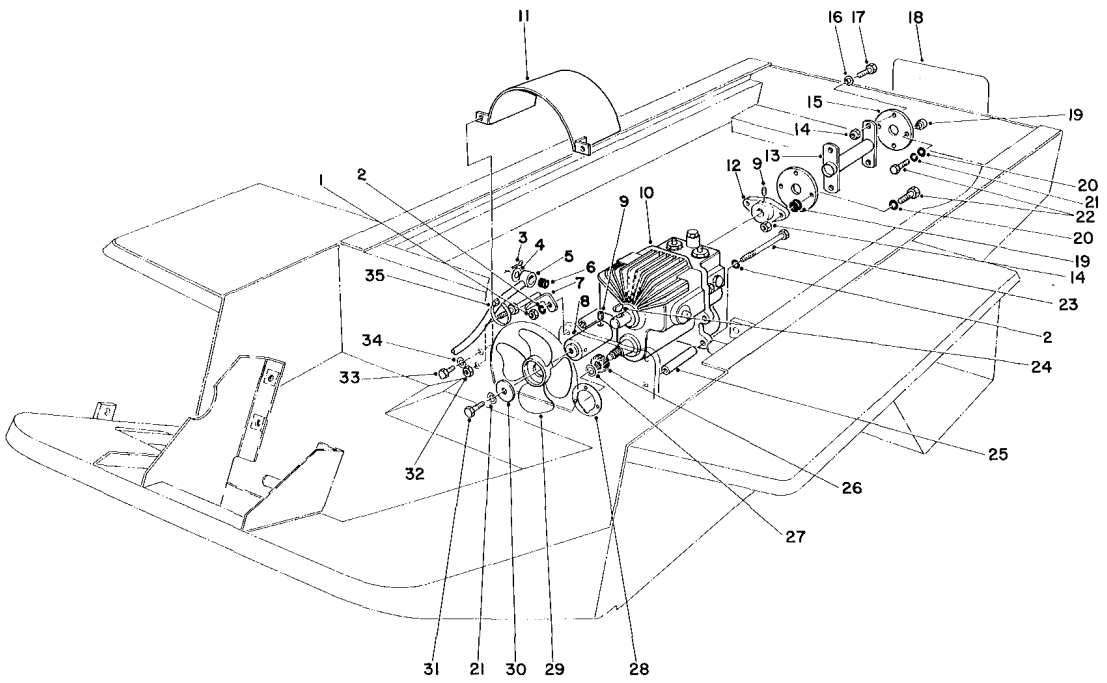

TRANSMISSION AND DRIVE COUPLING ASSEMBLY

Ref. No.	Part No.	Description	No. Used
1	3217-7	Nut Hex	1
2	3253-21	Washer – Lock Spring	3
3	3272-10	Pin Cotter	1
4	3256-26	Washer – Plain, Flat	1
5	27-4160	Pump Control Tube	1
6	23-2270	Bushing – Rubber	1
7	27-5310	Axle Support	1
8	27-4340	Hub & Plug Assembly	1
9	3245-1	Setscrew	4
10	49-7910	Transmission	1
11	27-3270	Fan Shroud	1
12	27-4370	Pump Hub	1
13	44-8720	Drive Shaft	1
14	32152-5	Nut – Lock, Top Deform	6
15	44-2230	Coupling – Rubber	2
16	27-6600	Spacer – Rubber Coupling	4
17	3210-5	Screw – Cap, Hex. Hd.	4
18	43-5120	Decal – Toro	1

Ref. No.	Part No.	Description	No. Used
19	33-2020	Spacer	4
20	3256-3	Washer – Plain, Flat	4
21	3253-4	Washer – Lock, Spring	2
22	3210-8	Screw – Cap, Hex. Hd.	4
23	323-38	Screw – Cap Hex Hd.	2
24	3257-5	Woodruff Key	2
25	27-3680	Mounting Spacer	4
26	23-4810	Spur Gear	1
27	32120-72	Snap Ring	1
28	27-3690	Gasket – Transmission	1
29	27-3740	Fan	1
30	27-4360	Washer	1
31	322-5	Capscrew	1
32	3218-5	Nut – Hex Jam	2
33	321-2	Screw – Cap Hex Hd.	2
34	3253-3	Washer – Lock Spring	2
35	3290-378	Plastic Ty-On	1

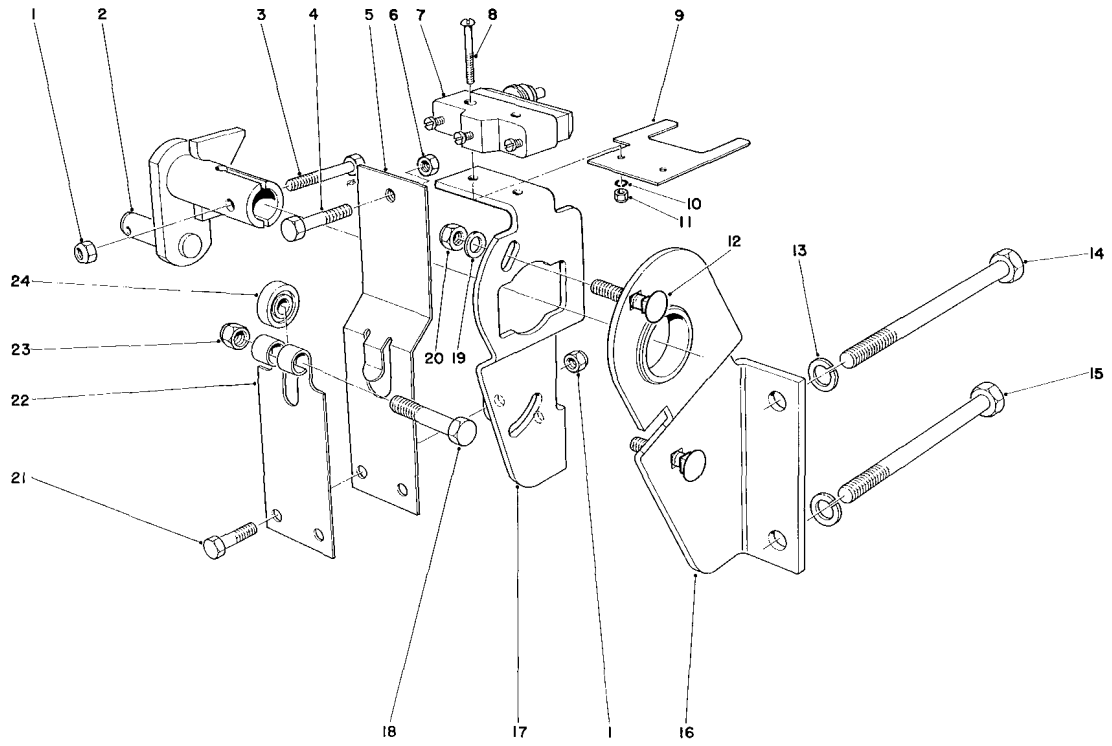

TRANSMISSION INTERLOCK ASSEMBLY

Ref. No.	Part No.	Description	No. Used
1	3296-42	Nut – Lock	4
2	29-9790	Pump Lever	1
3	321-9	Capscrew	2
4	3210-7	Screw – Cap Hex Hd.	1
5	29-6170	Extended Leaf Spring	1
6	3219-2	Nut Hex	1
7	29-6160	Micro Switch	1
8	3249-11	Screw–Machine, Round Head	2
9	46-8810	Stop – Leaf Spring	1
10	3254-9	Washer – Lock Internal Tooth	2
11	3217-16	Nut – Hex	2
12	3230-2	Carriage – Bolt	2

Ref. No.	Part No.	Description	No. Used
13	3253-21	Washer – Lock	2
14	27-9620	Capscrew	1
15	323-39	Screw – Cap Hex. Hd.	1
16	52-8890	Mounting Bracket	1
17	52-9070	Pump Plate	1
18	322-17	Screw – Cap Hex. Hd.	1
19	3256-2	Washer	2
20	3296-29	Nut – Lock	2
21	321-4	Screw – Cap Hex. Hd.	2
22	29-6150	Leaf Spring	1
23	3296-29	Nut – Lock	1
24	251-259	Ball Bearing	1

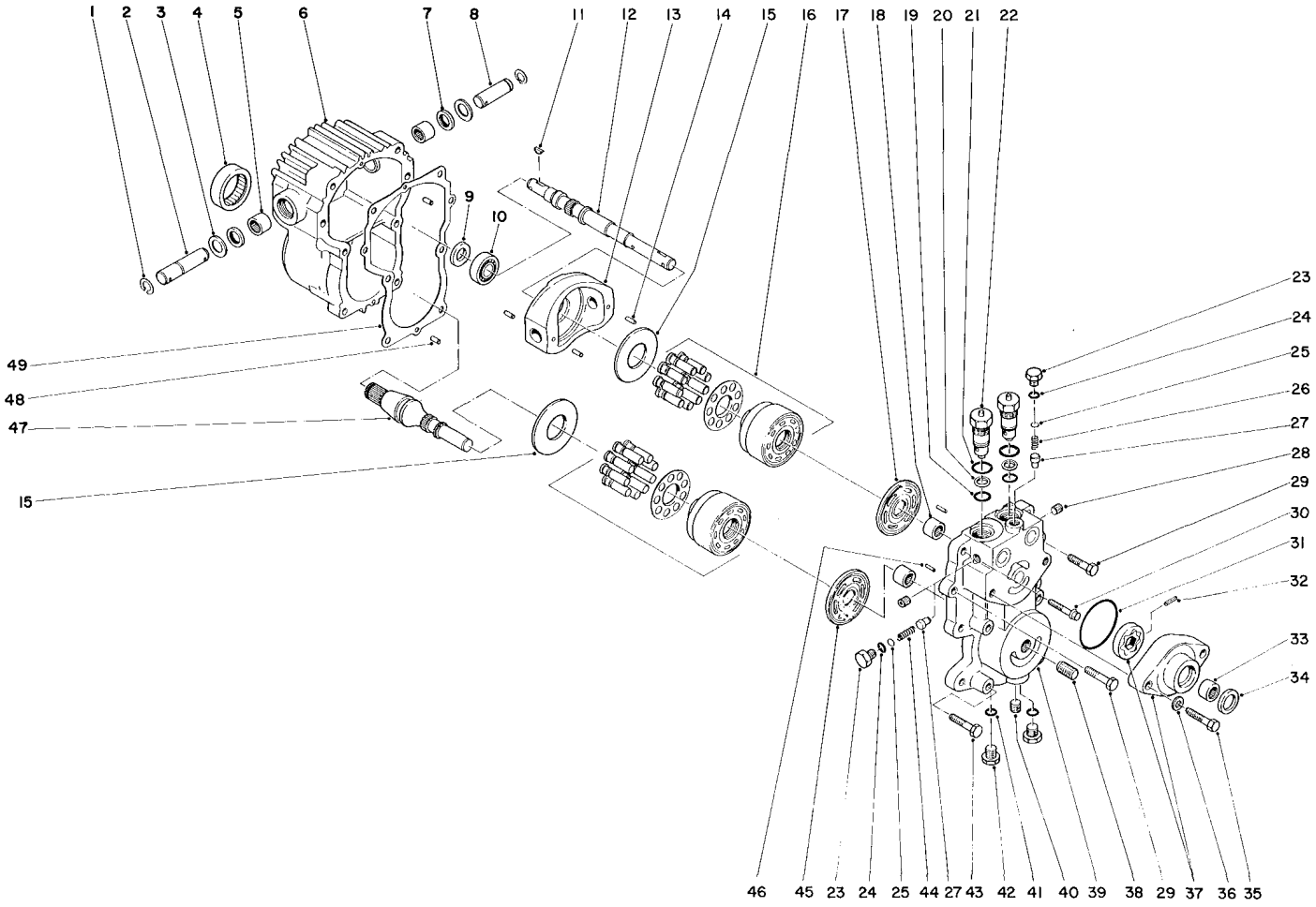

TRANSMISSION ASSEMBLY 49-7910

Ref. No.	Part No.	Description	No. Used
1	32151-46	Retaining Ring	2
2	25-2500	Trunnion Shaft	1
3	25-2510	Washer	2
4	28-3300	Roller Bearing	1
5	28-3310	Needle Bearing	2
6	49-7870	Housing	1
7	25-3210	Lip Seal	2
8	28-3670	Trunnion Shaft	1
9	28-3660	Lip Seal	1
10	28-3650	Ball Bearing	1
11	3257-5	Woodruff Key	2
12	28-3640	Pump Shaft	1
13	49-7820	Variable Swashplate	1
14	32121-91	Pin	3
15	25-2380	Thrust Plate	2
16	48-1800	Cylinder Block Kit	2
17	46-7320	Pump Valve Plate	1
18	25-3300	Needle Bearing	2
19	28-3590	"O" Ring	2
20	28-3580	Back Up Ring	2
21	28-3570	"O" Ring	2
22	49-7830	Check Valve Assembly (Incl. Ref. # 19 - 21)	2
23	25-2460	Hex Hd. Plug	2
24	28-3400	"O" Ring	2
25	25-2470	Shim Pack	A/R
26	46-7310	Relief Valve Spring Imp.	1

Ref. No.	Part No.	Description	No. Used
27	28-3420	Relief Valve Cone Chg.	2
28	285-17	Pipe Plug	4
29	323-8	Capscrew	2
30	28-3530	Capscrew	2
31	28-3520	"O" Ring	1
32	38-2680	Pin	1
33	28-3480	Needle Bearing	1
34	28-3470	Lip Seal	1
35	324-23	Hex Hd. Capscrew	2
36	28-3450	Flat Washer	2
37	38-2670	Charge Pump Kit (Incl. Ref. # 31 - 34)	1
38	25-2660	Filter Union	1
39	49-7850	Center Section	1
40	46-7280	Plug – Pipe	1
41		"O" Ring	2
42	28-3440	Threaded Plug (Incl. Ref. # 41)	2
43	323-10	Capscrew	4
44	25-2480	Relief Valve Spring Chg.	1
45	28-3380	Motor Valve Plate	1
46	25-2430	Pin	2
47	49-8200	Motor Shaft	1
48	28-3350	Pin	2
49	28-3340	Gasket	1

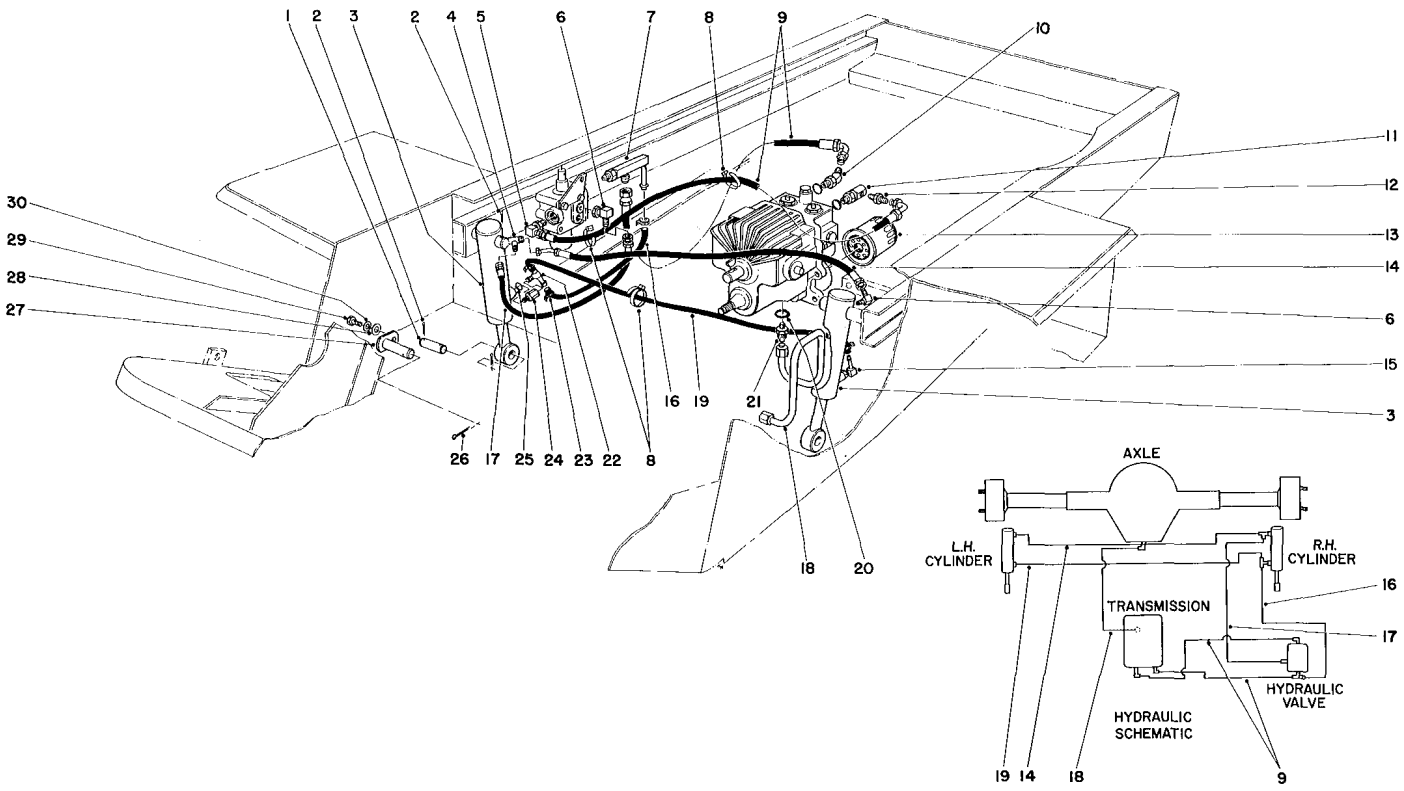

HYDRAULIC VALVE AND LIFT ARM AND CYLINDERS

Ref. No.	Part No.	Description	No. Used
1	27-4240	Pin – Cylinder	2
2	3272-23	Pin – Cotter	6
3	43-5260	Hydraulic Cylinder	2
4	353-566	Fitting – Adjustment Tee	1
5	353-374	90° Elbow	1
6	353-375	90° Elbow	2
7	38-2550	Fitting Assembly	1
8	3290-378	Plastic Ty – On	3
9	38-2560	Hose – Transmission To Valve	2
10	353-212	Fitting	1
11	36-7960	Fitting Special	1
12	353-678	Adapter	1
13	23-2300	Oil Filter	1
14	27-5010	Hose – Cylinder Connector	1
15	304-99	90° Barb Hose Stem	1

Ref. No.	Part No.	Description	No. Used
16	27-4490	Hose – Low Pressure	1
17	27-5020	Hose – Cylinder Tee To Valve	1
18	27-3760	Hydraulic Tube	1
19	27-4480	Hose – Low Pressure	1
20	237-80	"O" – Ring	1
21	353-385	Fitting (Incl. Ref. #20)	1
22	353-567	Fitting – Male Tee	1
23	2412-36	Clamp – Worm Drive	4
24	353-565	Fitting – Connector	1
25	237-78	"O" Ring	1
26	3272-17	Pin Cotter	2
27	27-4310	Pivot Pin	2
28	3256-22	Washer – Plain Flat	2
29	321-2	Screw – Cap Hex. Hd.	2
30	3253-3	Washer – Lock Spring	2

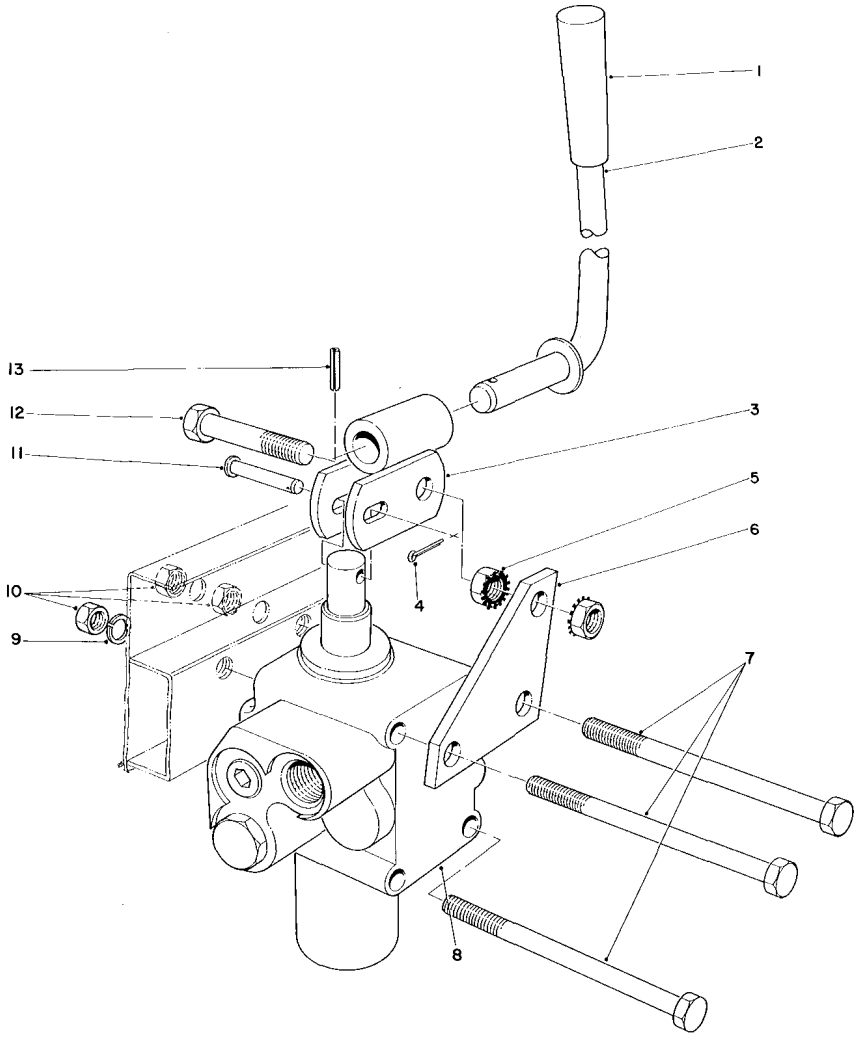

VALVE AND LEVER ASSEMBLY

Ref. No.	Part No.	Description	No. Used
1	233-39	Knob	1
2	27-4200	Valve Lever	1
3	27-4220	Valve Lever Link	1
4	3272-6	Cotter Pin	1
5	32149-2	Nut – Lock	2
6	27-4230	Bracket – Valve	1
7	321-24	Screw – Cap, Hex Hd.	3

Ref. No.	Part No.	Description	No. Used
8	43-1700	Valve Hydraulic	1
9	3253-3	Lockwasher	2
10	3217-5	Nut – Hex	4
11	283-17	Clevis Pin	1
12	321-10	Screw – Cap, Hex Hd.	1
13	32121-73	Roll Pin	1

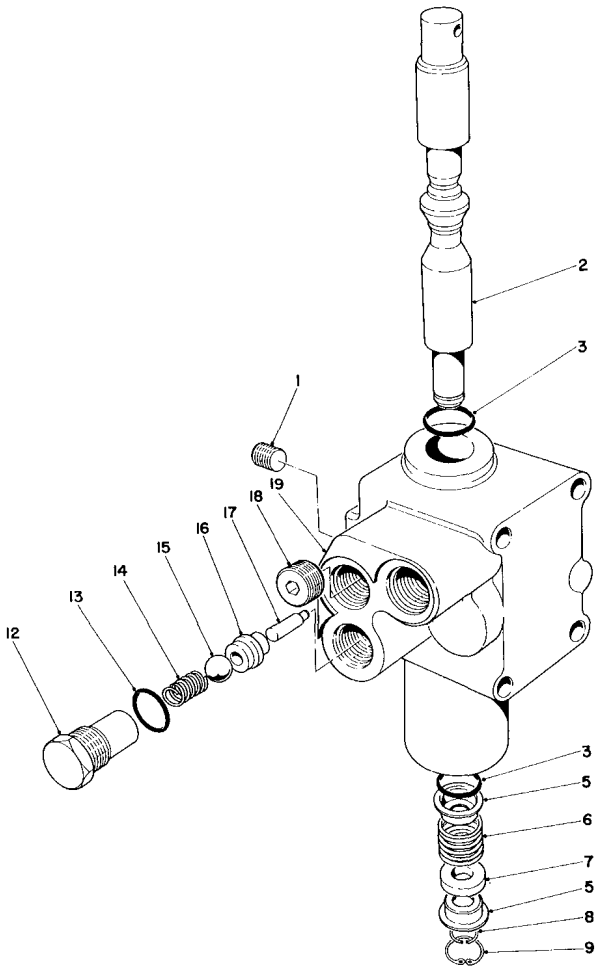

VALVE ASSEMBLY NO. 43-1700

Ref. No.	Part No.	Description	No. Used
1	28-1120	Plug	1
2	27-5210	Spool	1
3	22-8500	O-Ring	2
5	22-8380	Retainer – Spring	2
6	22-8410	Spring	1
7	27-5200	Float Spacer	1
8	22-8480	Snap Ring – Spool	1
9	22-8490	Snap Ring	1

Ref. No.	Part No.	Description	No. Used
12	22-8330	Plug	1
13	237-42	O-Ring	1
14	22-8340	Spring	1
15	22-8350	Ball	1
16	22-8370	Seat – Check Valve	1
17	22-8360	Pin Cam	1
18	28-1130	Plug	1
19		Body	1



HYDRAULIC CYLINDER NO. 43-5260

Ref. No.	Part No.	Description	No. Used
1		Tube Assembly	1
2	43-5130	Jam Nut	1
3		Back Up Washer	3
4		O-Ring Piston	2
5	43-5150	Piston	1
6		O-Ring	1
7	43-5140	Head	1

Ref. No.	Part No.	Description	No. Used
8		O-Ring	1
9		Leather	1
10		Dust Seal	1
11	43-5220	Ring Retaining	1
12	43-5230	Shaft w/Clevis	1
*	43-5250	Seal Repair Kit (Incl. Ref. # 3, 4, 6, 8, 9 & 10)	1

*Not Illustrated

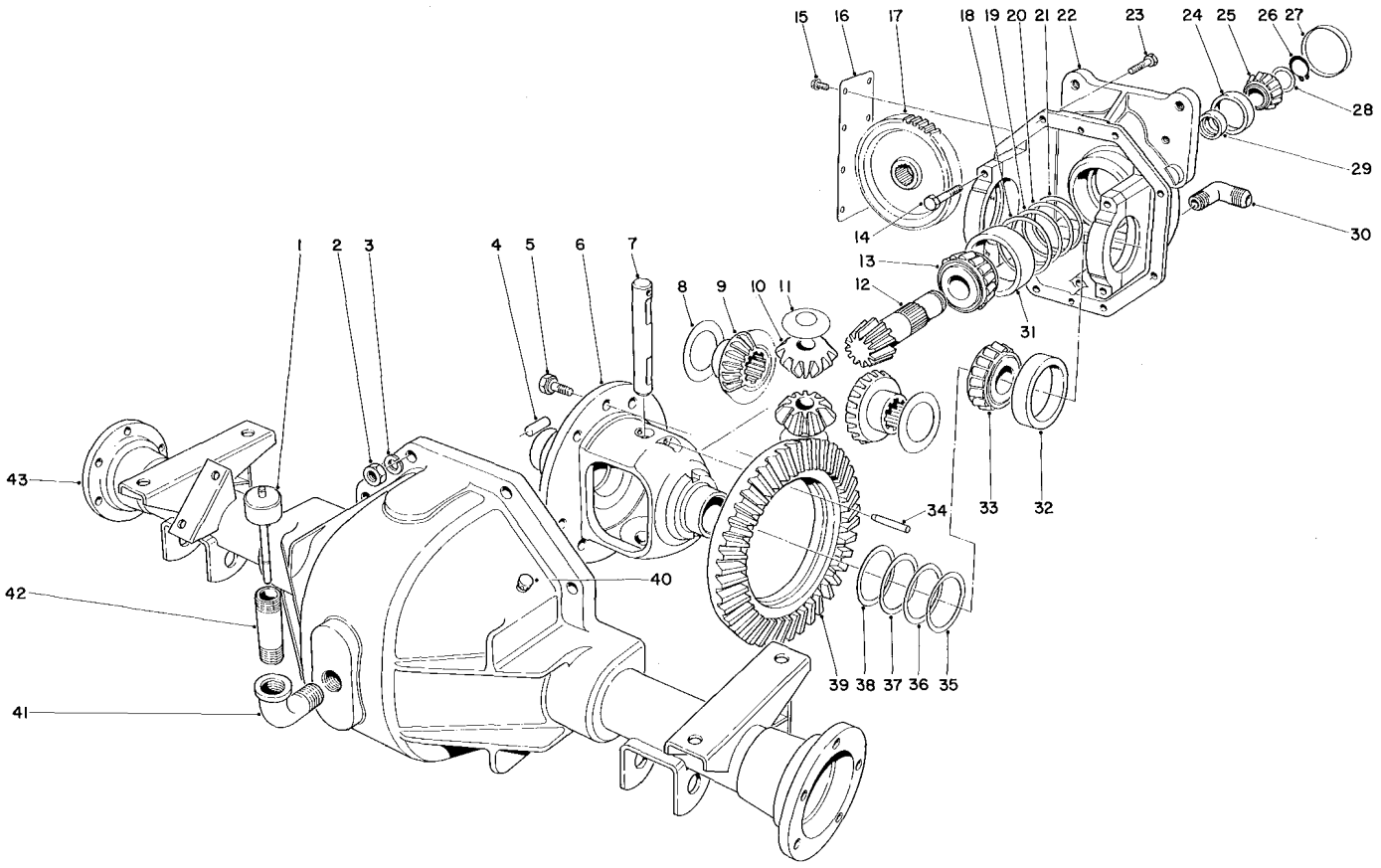

DIFFERENTIAL ASSEMBLY

Ref. No.	Part No.	Description	No. Used
1	27-3710	Dipstick	1
2	3219-2	Nut	8
3	3255-8	Lockwasher	8
4	21-8270	Dowel Pin	2
5	21-7770	Drive Gear Screw	5
6	21-7670	Differential Case	1
7	21-7700	Pinion Mate Shaft	1
8	21-7720	Thrust Washer	2
9	24-8790	Differential Bevel Side Gear	2
10	21-7690	Pinion Gear	2
11	21-7730	Thrust Washer	2
12		Drive Pinion (Incl. Ref. #39)	1
13	43-6760	Tapered Roller Bearing Cone	1
14	324-23	Capscrew	4
15	12-5450	Thread Forming Screw	8
16	21-7830	Gear Cover	1
17	21-8150	Spur Gear	1
18	43-6710	Shim Adjusting Differential Bearing .003	A/R
19	43-6711	Shim Adjusting Differential Bearing .005	A/R
20	43-6712	Shim Adjusting Differential Bearing .010	A/R
21	43-6713	Shim Adjusting Differential Bearing .030	A/R
22	43-6860	Upper Housing Assembly (Incl. Ref. #14)	1
23	3210-7	Capscrew	8

Ref. No.	Part No.	Description	No. Used
24	254-90	Bearing Cup	1
25	254-91	Bearing Cone	1
26	43-6550	Retaining Ring	1
27	21-7850	Cap Plug	1
28	46-2210	Shim Front Pinion Bearing (.031)	A/R
*	46-2211	Shim Front Pinion Bearing (.033)	A/R
*	46-2212	Shim Front Pinion Bearing (.035)	A/R
*	46-2213	Shim Front Pinion Bearing (.037)	A/R
*	46-2214	Shim Front Pinion Bearing (.039)	A/R
*	46-2215	Shim Front Pinion Bearing (.041)	A/R
*	46-2216	Shim Front Pinion Bearing (.043)	A/R
*	46-2220	Shim Front Pinion Bearing (.045)	A/R
*	46-2221	Shim Front Pinion Bearing (.047)	A/R
*	46-2222	Shim Front Pinion Bearing (.049)	A/R
*	46-2223	Shim Front Pinion Bearing (.051)	A/R
*	46-2224	Shim Front Pinion Bearing (.053)	A/R

*Not Illustrated

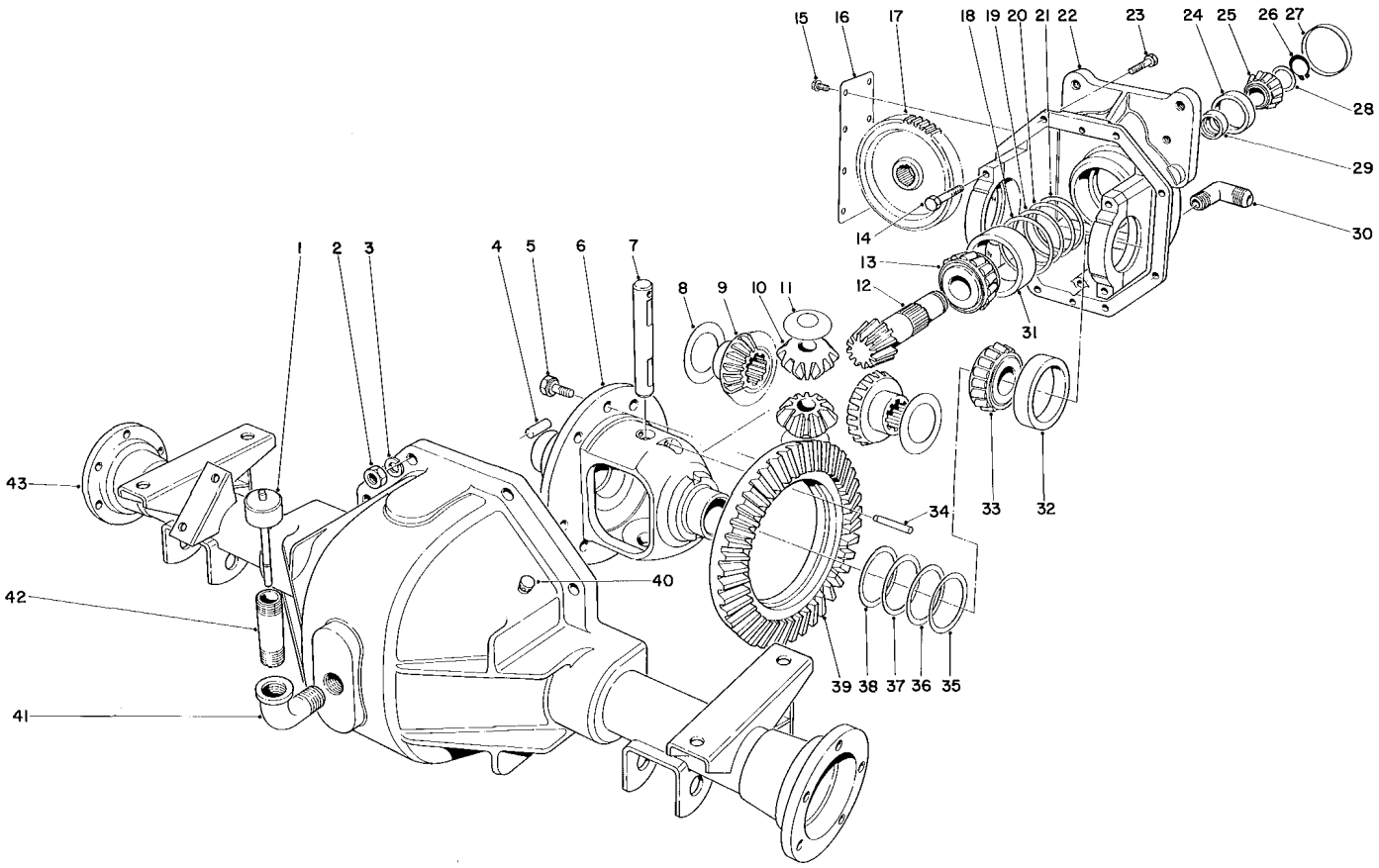

DIFFERENTIAL ASSEMBLY (Continued)

Ref. No.	Part No.	Description	No. Used
*	46-2225	Shim Front Pinion Bearing (.055)	A/R
*	46-2226	Shim Front Pinion Bearing (.057)	A/R
29	21-8020	Front Pinion Bearing Spacer	1
30	353-533	Fitting 90° Elbow	1
31	43-6750	Tapered Roller Bearing Cup	1
32	254-66	Cup – Tapered Bearing	2
33	254-65	Cone – Tapered Bearing	2
34	32121-15	Roll Pin	1
35	21-8090	Differential Adjust. Shim. .003	A/R
36	21-8100	Differential Adjust. Shim. .005	A/R
37	21-8110	Differential Adjust. Shim. .010	A/R
38	21-8120	Differential Adjust. Shim. .030	A/R
39		Ring Gear	1
40	46-3330	Vent Tube Assembly	1
41	2811-9	Street Elbow 90°	1
42	289-38	Pipe Nipple	1
43	43-6850	Lower Housing Assembly	1
*	43-6510	Gear & Pinion Assembly (Incl. Ref. # 12 & 39)	1

*Not Illustrated

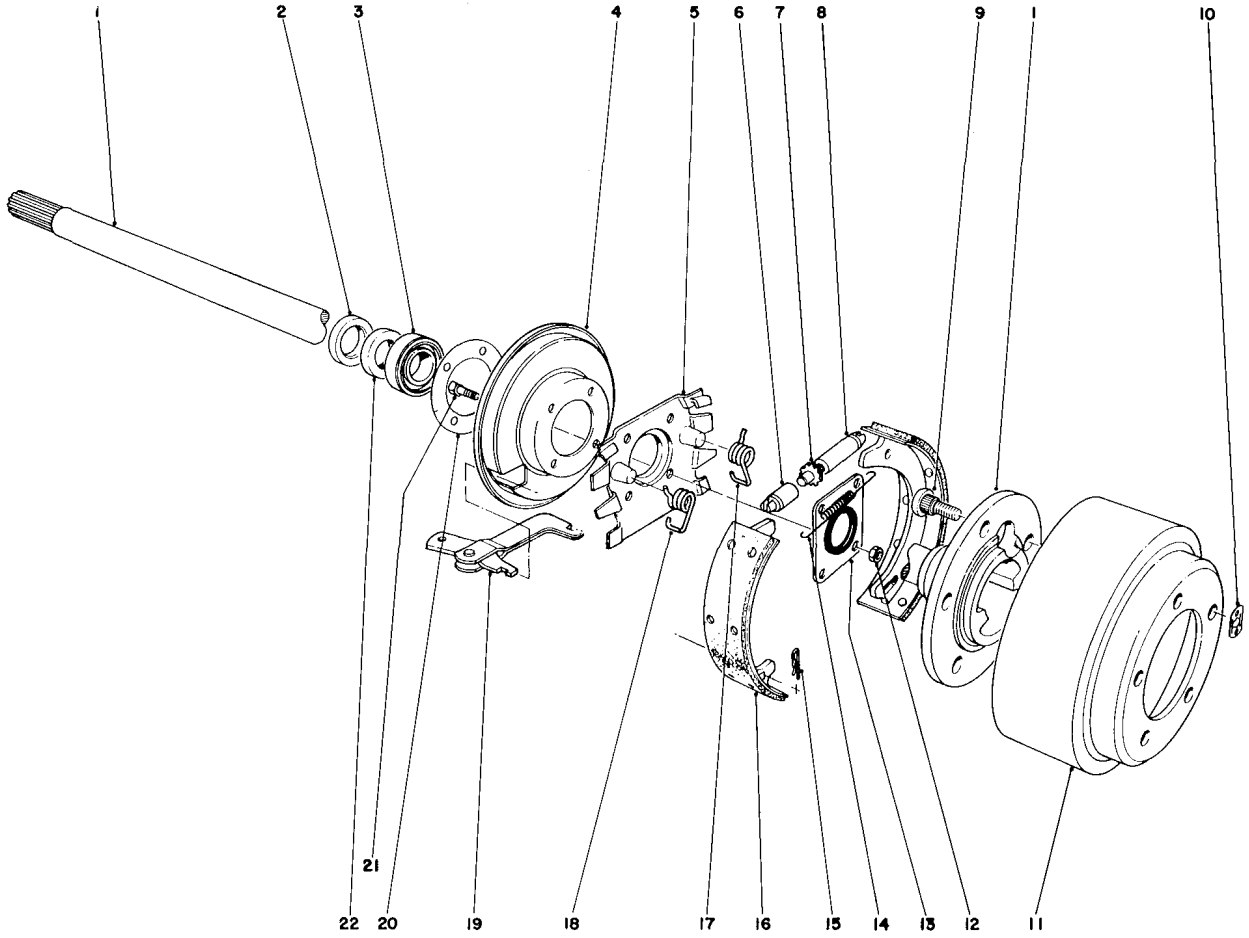

BRAKE ASSEMBLY

Ref. No.	Part No.	Description	No. Used
1	27-6860	Axle Shaft Flanged L.H.	1
*	27-6850	Axle Shaft Flanged R.H.	1
2	21-8330	Oil Seal	2
3	21-8180	Bearing – Tapered Roller	2
4	21-9450	Dust Shield	2
5	40-2190	Torque Spider	2
6	21-9390	Socket – Adjusting Screw	2
7	21-9370	Adjusting Screw	2
8	21-9380	Pivot Nut	2
9	242-34	Axle Flange Stud	10
10	21-8360	Clip Retaining	2
11	28-0680	Brake Drum	2

Ref. No.	Part No.	Description	No. Used
12	43-6800	Locknut – Flange Hd.	8
13	28-0670	Oil Seal	2
14	21-9440	Spring – Adjusting Screw	2
15	21-9460	Retainer – Parking Brake Lever	4
16	43-2690	Shoe & Lining Ass'y.	4
17	21-9420	Spring – Shoe Return L.H.	2
18	21-9430	Spring – Shoe Return R.H.	2
19	27-6880	Strut & Lever Parking Brake	2
20	21-8320	Gasket Wheel Bearing	2
21	28-0660	Capscrew	8
22	24-8840	Ring Wheel Bearing	2

*Not Illustrated

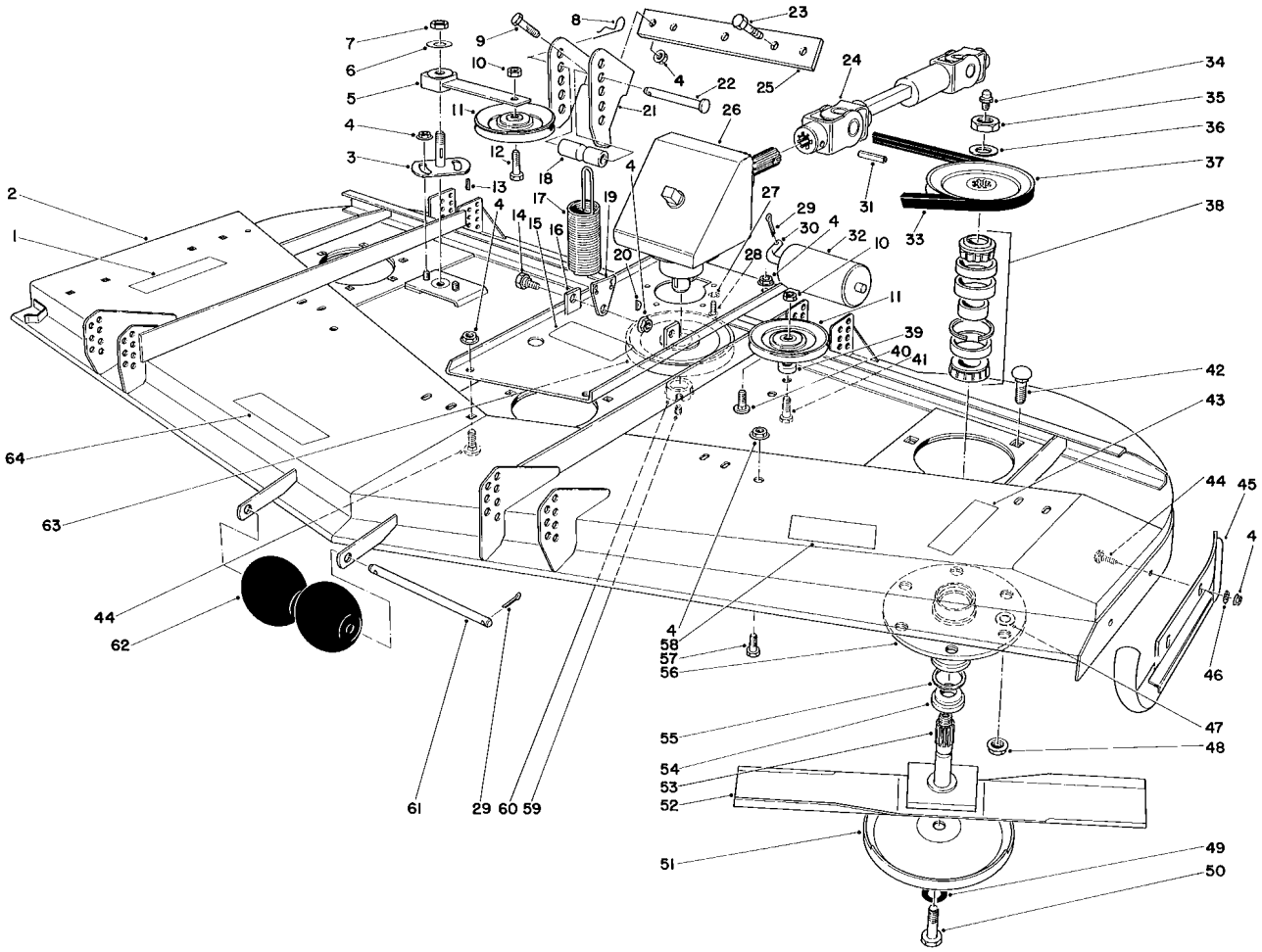

CUTTING UNIT MODEL NO. 30562

Ref. No.	Part No.	Description	No. Used
1	26-7980	Decal – Caution	1
2	52-5780	Cutting Deck	1
3	44-6300	Plate – Idler	1
4	3290-357	Nut – Lock	17
5	27-8580	Idler Socket & Bushing Assy.	1
6	3256-27	Washer	1
7	3296-33	Nut – Lock	1
8	3290-355	Pin – Hair	2
9	323-11	Screw – Cap, Hex Hd.	3
10	3296-5	Nut – Lock	2
11	52-4580	Pulley – Idler	2
12	3211-8	Screw – Cap, Hex Hd.	1
13	5-1077	Key Square	1
14	46-3380	Bolt – Shoulder	2
15	44-6470	Decal – Caution	1
16	47-5530	Base – Gear Box	1
17	46-3200	Spring – Extension	2
18	40-0300	Spacer	2
19	46-3190	End Spring	2
20	3257-5	Key – Woodruff	1
21	46-2620	Bracket Spring	2
22	283-55	Pin Clevis	2
23	323-6	Screw – Cap, Hex Hd.	2

Ref. No.	Part No.	Description	No. Used
24	27-4520	Universal Drive Shaft	1
25	47-5450	Mount – Bracket	1
26	8-0909	Gear Box	1
27	3253-21	Washer – Lock	5
28	3274-1	Screw – Cap, Socket Hd.	5
29	3272-11	Cotter Pin	4
30	40-0340	Shaft – Rear Roller	2
31	32121-34	Pin – Roll	2
32	36-1740	Roller – Deck	2
33	44-6260	V-Belt	1
34	302-2	Grease Fitting	3
35	32146-20	Nut – Lock, Hex Jam	3
36	7-4150	Washer	3
37	44-6340	Pulley – Hub Spindle	3
38	46-8530	Bearing Assembly	3
39	44-6390	Spacer	1
40	3231-27	Bolt – Carriage	2
41	3211-9	Screw – Cap, Hex. Hd.	1
42	3231-22	Bolt – Carriage Short Neck	20
43	26-7970	Decal – Caution (Rotating Blades)	1
44	3231-21	Bolt – Carriage, Short Neck	2
45	47-5480	L.H. Skid	1

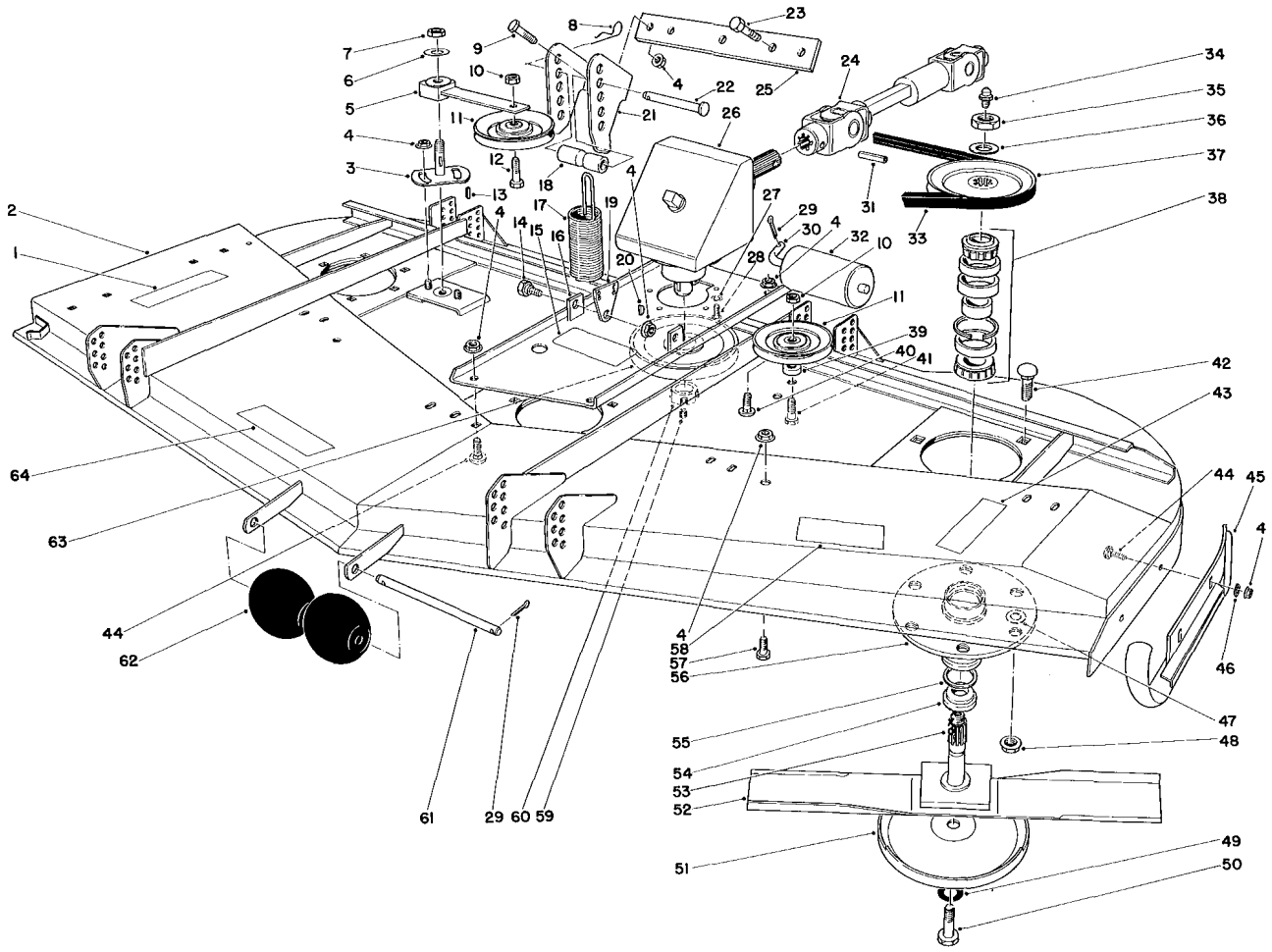

CUTTING UNIT MODEL NO. 30562 (Continued)

Ref. No.	Part No.	Description	No. Used
46	3290-224	Pyramidal Washer	2
47	3256-24	Washer	A/R
48	32128-21	Nut – Lock, Flange	18
49	3253-27	Washer – Lock, Spring	3
50	44-2200	Capscrew – Blade	3
51	27-1000	Anti-Scalp Cup	3
52	44-6250	Blade	3
53	27-0920	Spindle Shaft	3
54	27-0950	Spacer – Spindle Bearing	3

Ref. No.	Part No.	Description	No. Used
55	253-139	Seal – Wave	6
56	27-0880	Spindle Housing	3
57	323-4	Screw – Cap Hex. Hd.	2
58	52-1430	Decal – Rear Weight	1
59	3245-9	Screw – Set, Socket Hd.	2
60	27-6140	Bushing – Taper Lock	1
61	40-6400	Shaft – Roller	1
62	29-4820	Roller – Front	2
63	27-6110	Pulley – Gear Box	1
64	26-7960	Decal – Caution	1

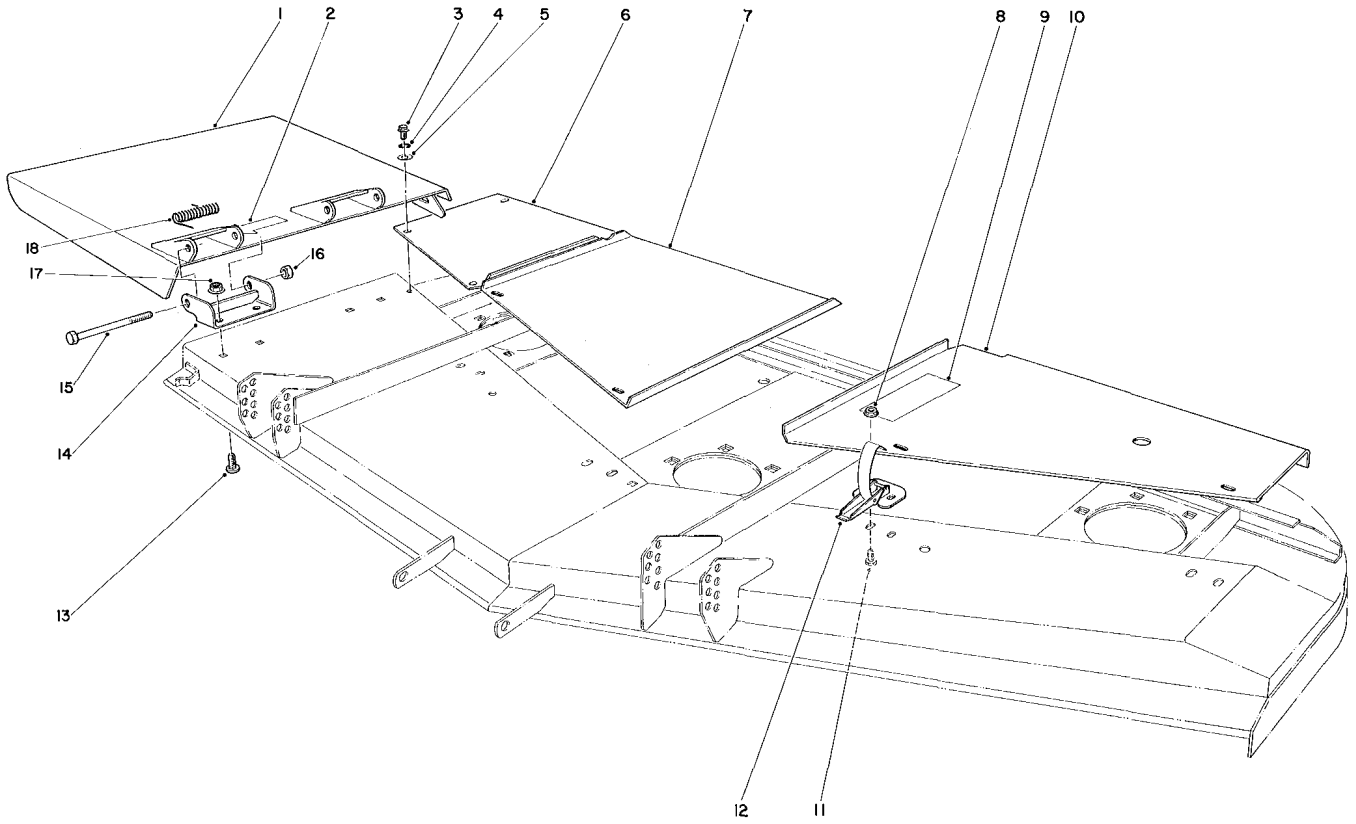

CUTTING UNIT MODEL NO. 30562 (Continued)

Ref. No.	Part No.	Description	No. Used
1	52-5790	Deflector	1
2	26-7120	Decal – Blade Line	1
3	32104-114	Screw Self Tapping Hex. Hd.	4
4	3253-3	Washer – Lock	4
5	3256-22	Washer	4
6	44-6280	Cover – Deck R.H.	1
7	44-6270	Cover – Deck Center	1
8	32128-17	Nut – Lock, Flange	8
9	42-6860	Decal – Height of Cut	1

Ref. No.	Part No.	Description	No. Used
10	44-6290	Cover – Deck L.H.	1
11	3290-321	Screw – Machine Hex Slotted	8
12	249-21	Latch Draw	4
13	3231-27	Bolt – Carriage	4
14	51-1530	Hinge Bracket	2
15	325-17	Screw – Cap Hex. Hd.	2
16	32153-5	Nut – Lock	2
17	3290-357	Nut – Lock	4
18	51-1550	Spring	2

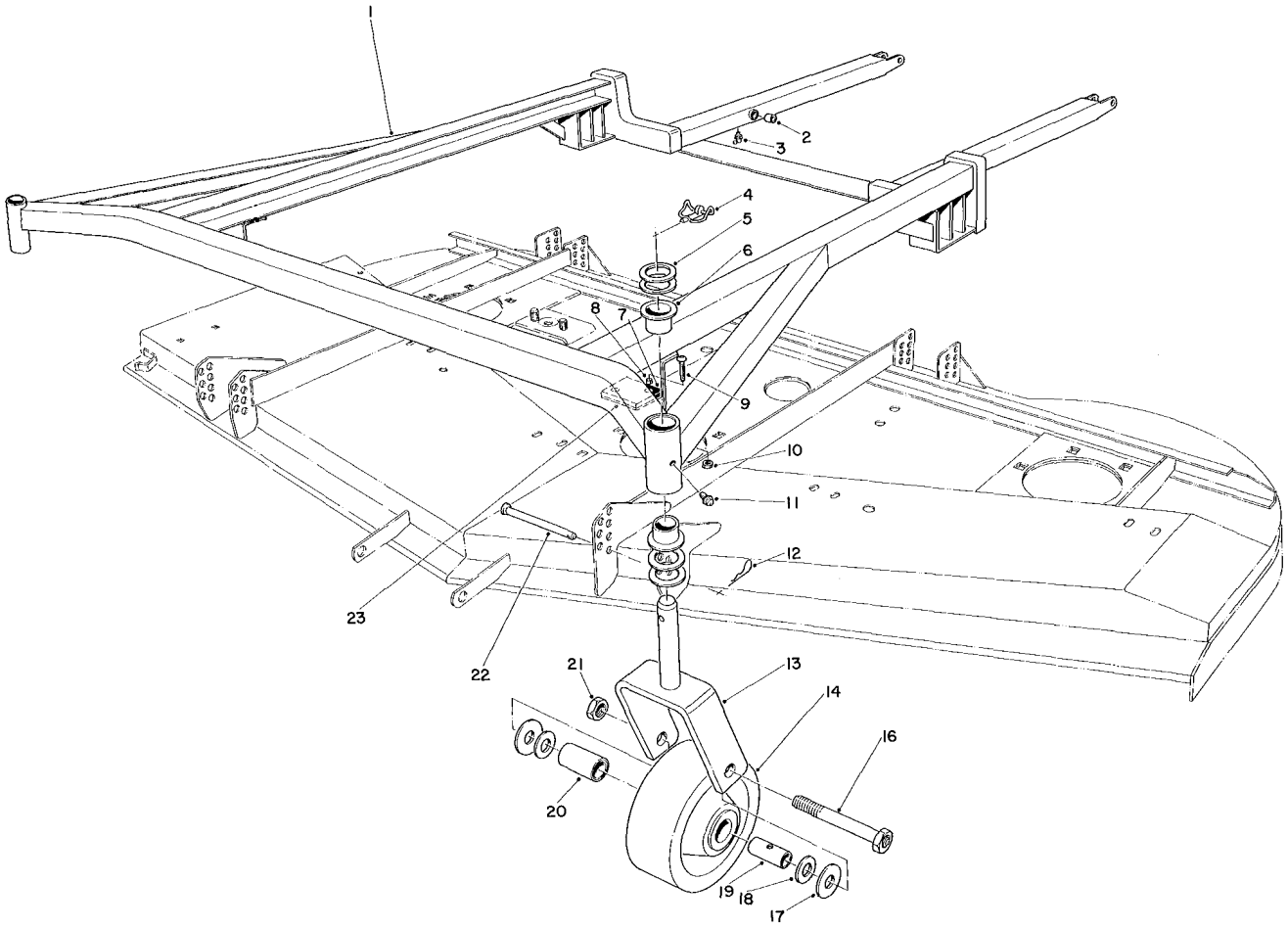

CUTTING UNIT MODEL NO. 30562 (Continued)

Ref. No.	Part No.	Description	No. Used
1	44-6410	Frame (Incl. Ref. #2, 3 & 6)	1
2	256-101	Bushing	4
3	302-40	Grease Fitting	2
4	3290-384	Lynch Pin	2
5	3-6781	Washer – Thrust	8
6	28-9290	Bushing Special	4
7	40-0330	Cushion – Rubber	2
8	40-9520	Spacer – Split	4
9	32122-28	Screw – Machine Truss Hd.	4
10	3296-2	Nut – Lock	4
11	302-5	Grease Fitting	2
12	3290-355	Pin – Hair	4

Ref. No.	Part No.	Description	No. Used
13	40-0370	Front Castor Fork	2
14	46-8230	Castor Wheel (Incl. Ref. #17-20)	2
16	46-8140	Axle	2
17	27-1170	Thrust Washer	4
18	27-1180	Bearing Retainer	4
19	46-8640	Spanner Bushing	2
20	27-1210	Roller Bearing	2
21	32146-20	Locknut	2
22	283-55	Pin Clevis	4
23	42-6200	Shim – Cushion	A/R

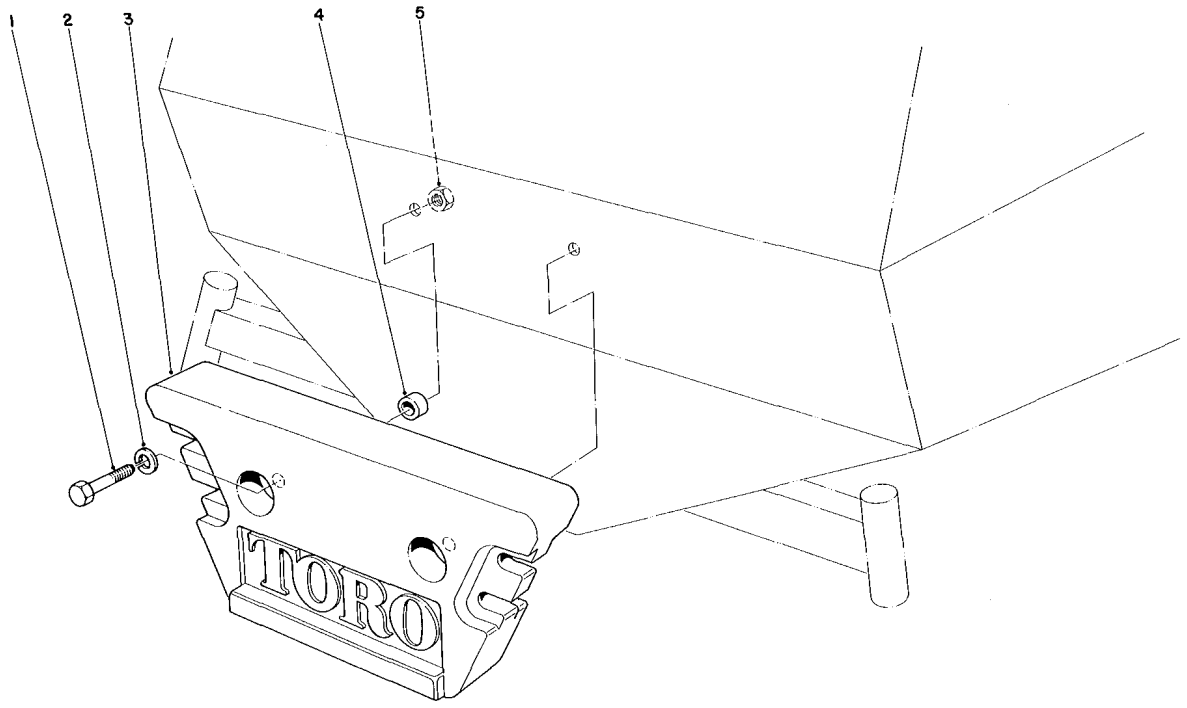

REAR WEIGHT †

Ref. No.	Part No.	Description	No. Used
1†	325-8	Screw – Cap, Hex Hd.	2
2†	3253-7	Washer – Lock, Spring	2
3†	24-5790	Rear Weight	1
4†	3-8847	Spacer	2
5†	3217-9	Nut – Hex	2

†Required on Groundsmaster 220 with 62" cutting unit. Parts must be ordered separately.

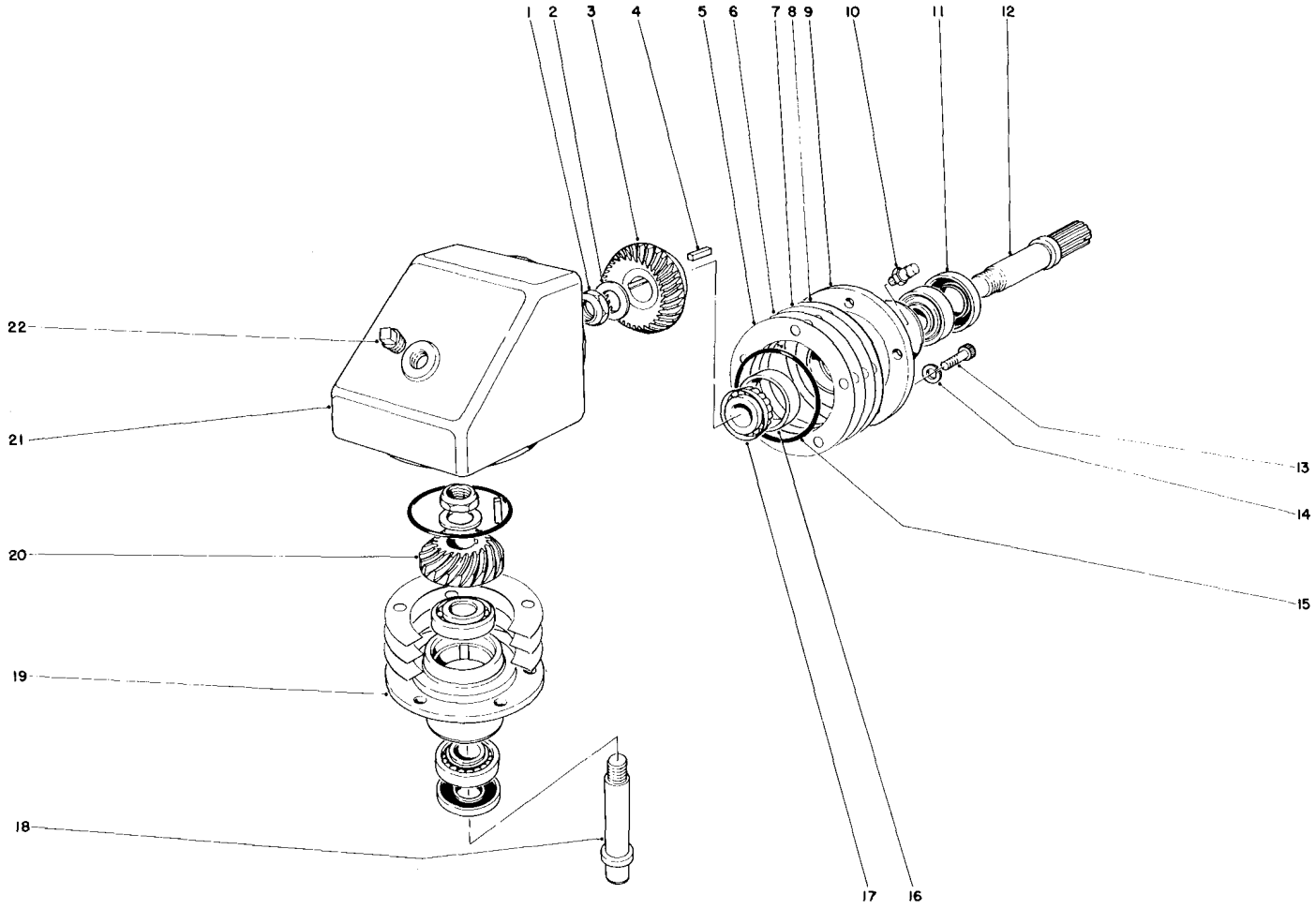

CUTTING UNIT MODEL NO. 30562, 30555, & 30560

Ref. No.	Part No.	Description	No. Used
1	3296-15	Nut	2
2	3-6514	Thrust Washer	2
3	26-1340	Gear – Spiral Bevel	1
4	18-6430	Square Key	2
5	26-1350	Shim .002 Thick Red	A/R
6	26-1360	Shim .005 Thick Blue	A/R
7	26-1370	Shim .015 Thick Pink	A/R
8	33-2040	Shim .020 Thick Yellow	A/R
9	26-1290	Bearing Housing – Input	1
10	302-14	Vent Plug	1
11	253-137	Oil Seal	2
12	26-1310	Shaft – Input	1

Ref. No.	Part No.	Description	No. Used
13	3274-7	Capscrew Socket Head	5
14	3253-21	Lockwasher	5
15	237-97	O-Ring	2
16	254-90	Bearing Cup	4
17	254-91	Bearing Cone	4
18	26-1320	Shaft – Output	1
19	26-1380	Bearing Housing – Output	1
20	26-1330	Pinion Spiral	1
21	26-1270	Gear Box	1
22	281-11	Pipe Plug Sq. Hd.	1

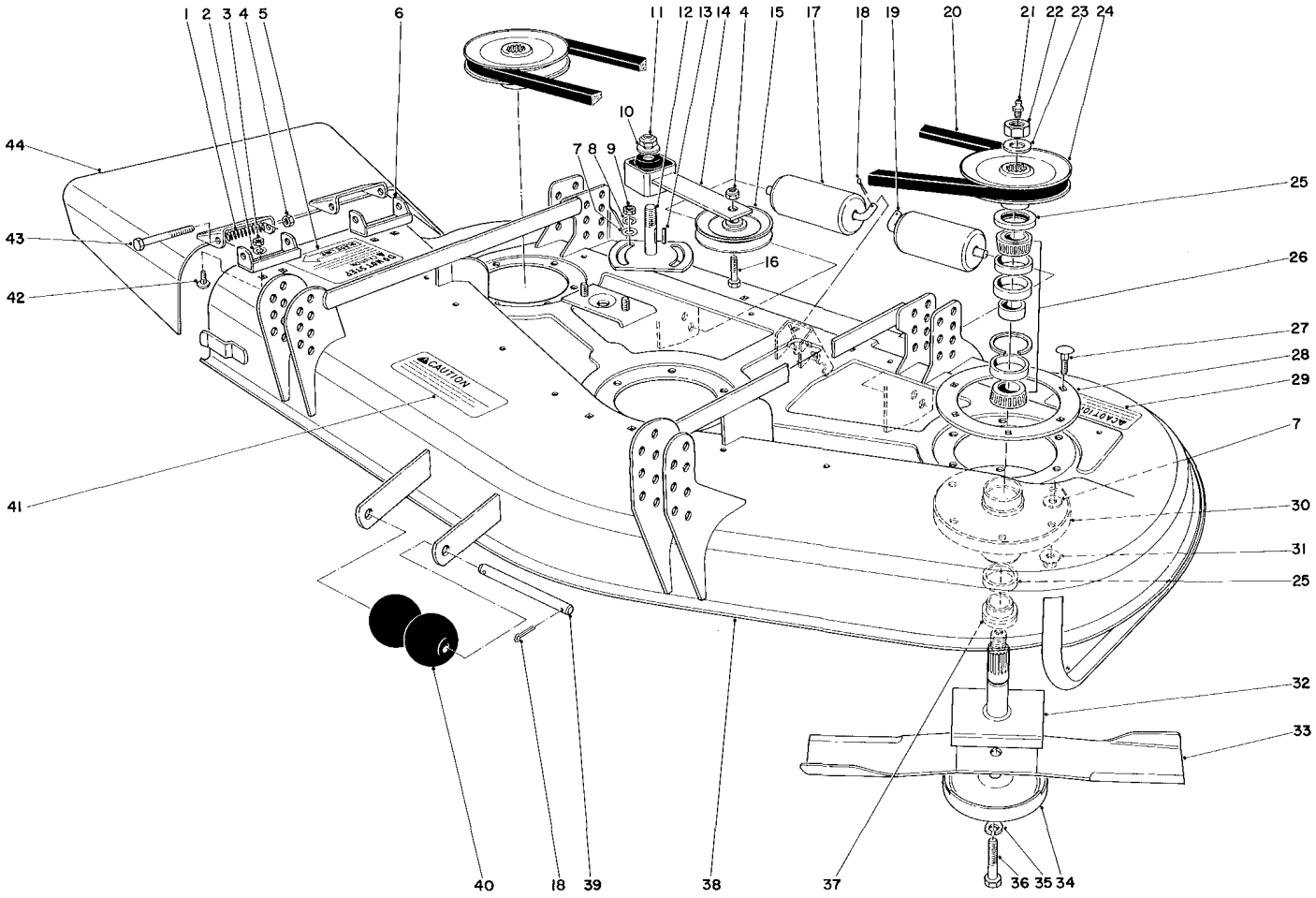

CUTTING UNIT MODEL NO. 30555

Ref. No.	Part No.	Description	No. Used
1	40-6230	Spring – Torsion	2
2	3253-4	Lockwasher	4
3	3217-6	Nut	4
4	3296-5	Locknut	3
5	40-5730	Decal – Caution	1
6	29-5590	Pivot Bracket – Deflector	2
7	3256-24	Washer – Flat	20
8	3253-21	Lockwasher	2
9	3218-3	Nut – Jam	2
10	3256-27	Washer – Flat	1
11	3296-33	Locknut	1
12	28-9060	Plate – Idler	1
13	5-1077	Key Square	1
14	27-8580	Idler Socket	1
15	52-4580	Pulley – Idler	1
16	3211-8	Capscrew	1
17	36-1740	Roller – Deck	2
18	3272-11	Cotter Pin	4
19	40-0340	Shaft – Rear Roller	2
20	27-1160	V-Belt	1
21	302-2	Grease Fitting	3
22	32146-20	Locknut	3
23	7-4150	Washer	3

Ref. No.	Part No.	Description	No. Used
24	27-0970	Pulley	3
25	253-139	Seal – Wave	6
26	46-8530	Bearing Assembly	3
27	3231-22	Carriage Bolt	18
28	27-7680	Ring – Deck Support	3
29	26-7970	Decal – Caution	1
30	27-0880	Spindle Housing	3
31	32128-21	Locknut – Flange	18
32	27-0920	Spindle Shaft	3
33	27-0990	Blade	3
34	27-1000	Anti-Scalp Cup	3
35	3253-27	Lockwasher	3
36	44-2200	Screw – Blade Bolt	3
37	27-0950	Spacer – Spindle Bearing	3
38	40-0020	Cutting Deck	1
39	40-6400	Shaft – Roller	1
40	29-4820	Roller	2
41	26-7960	Decal – Caution	1
42	3230-20	Carriage Bolt	4
43	3211-15	Capscrew	2
44	40-6200	Grass Deflector	1
*	44-5480	Blade – High Sail (Optional)	3

*Not Illustrated

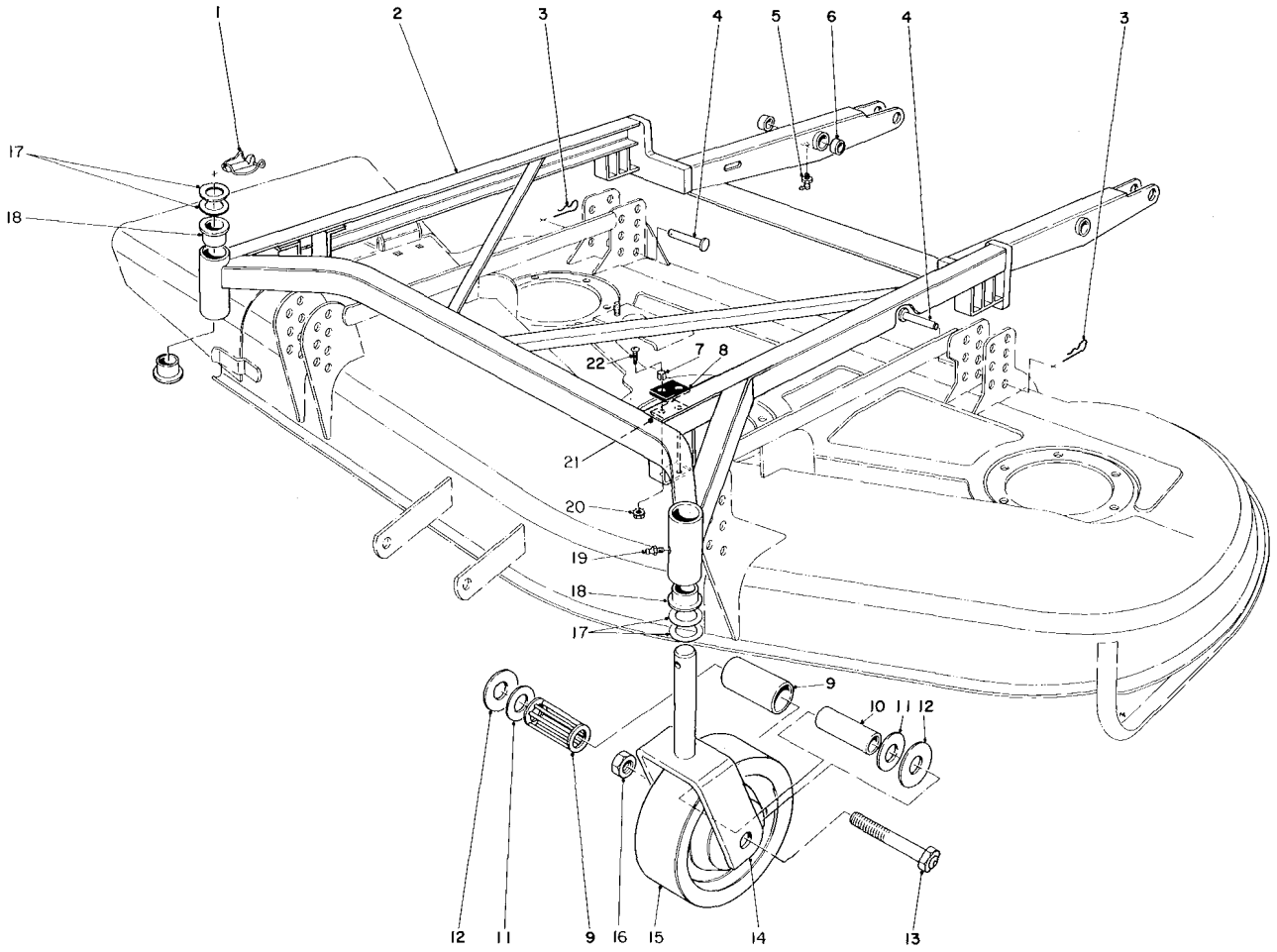

CUTTING UNIT MODEL NO. 30555 (Continued)

Ref. No.	Part No.	Description	No. Used
1	3290-384	Lynch Pin	2
2	44-2170	Frame – Deck Suspension (Incl. Ref. #5-6 & 18)	1
3	3290-355	Pin – Hair	4
4	283-55	Pin Clevis	4
5	302-40	Grease Fitting	2
6	256-101	Bushing	4
7	40-9520	Spacer – Split	4
8	40-0330	Cushion – Rubber	2
9	27-1210	Roller Bearing	2
10	46-8640	Spanner Bushing	2
11	27-1180	Bearing Retainer	4

Ref. No.	Part No.	Description	No. Used
12	27-1170	Thrust Washer	4
13	46-8140	Axle Assembly	2
14	40-0370	Front Castor Fork	2
15	46-8230	Wheel Assy. (Incl. Ref. #9-12)	2
16	32146-20	Nut – Lock	2
17	3-6781	Washer – Thrust	8
18	28-9290	Bushing – Special	4
19	302-5	Grease – Fitting	2
20	3296-2	Locknut	4
21	42-6200	Shim Cushion	A/R
22	32122-28	Machine Screw Truss Head	4

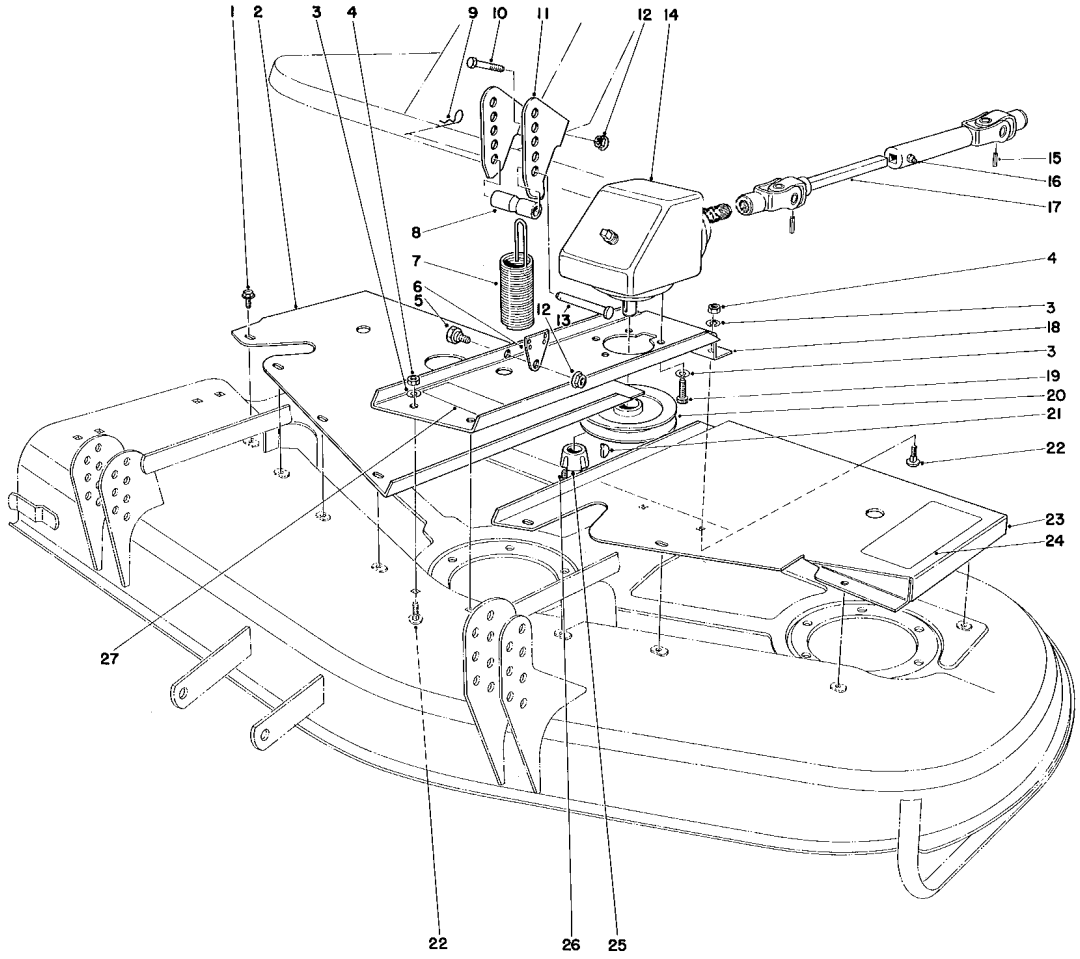

CUTTING UNIT MODEL NO. 30555 (Continued)

Ref. No.	Part No.	Description	No. Used
1	46-8560	Self Tapping Screw Hex Hd. w/Locking Flange	11
2	40-0410	Cover R.H.	1
3	3253-21	Lockwasher	9
4	3217-7	Nut	4
5	46-3380	Bolt – Shoulder	1
6	46-3190	End – Spring	1
7	46-3200	Spring – Extension	1
8	40-0300	Spacer	1
9	3290-355	Hair – Pin	1
10	323-11	Capscrew	2
11	46-2620	Bracket – Spring	1
12	3290-357	Nut – Lock Flange	3
13	283-55	Pin – Clevis	1

Ref. No.	Part No.	Description	No. Used
14	8-0909	Gear Box Assembly	1
15	32121-34	Roll Pin	2
16	302-5	Grease Fitting	1
17	27-4520	Universal Drive Shaft	1
18	40-0360	Base – Gear Box	1
19	3274-1	Capscrew – Socket Hd.	5
20	27-6110	Pulley – Gear Box	1
21	3257-5	Key Woodruff	1
22	3231-21	Carriage Bolt	4
23	40-0390	Cover L.H.	1
24	42-6860	Decal – Height of Cut	1
25	27-6140	Bushing – Taper Lock	1
26	3245-9	Set Screw – Socket Hd.	1
27	44-6470	Decal – Caution	1

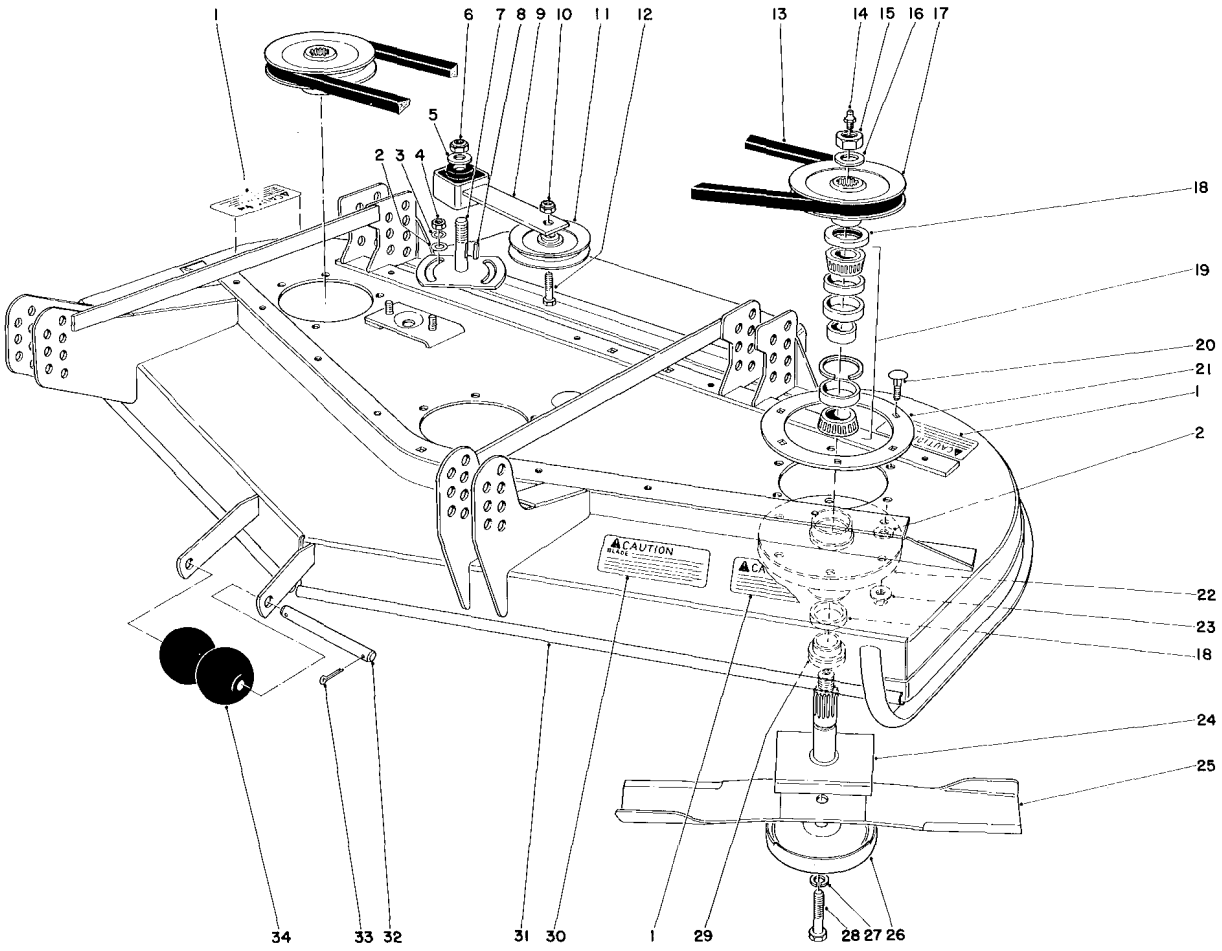

CUTTING UNIT MODEL NO. 30560

Ref. No.	Part No.	Description	No. Used
1	26-7970	Decal – Caution (Rotating Blades)	3
2	3256-24	Washer – Plain	A/R
3	3253-21	Washer – Lock	2
4	3218-3	Nut – Jam	2
5	3256-27	Washer – Plain	1
6	3296-33	Nut – Lock	1
7	28-9060	Plate – Idler	1
8	5-1077	Key Square	1
9	27-8580	Idler Socket	1
10	3296-5	Nut – Lock	1
11	52-4580	Pulley – Idler	1
12	3211-8	Screw – Cap Hex Hd.	1
13	27-1160	V-Belt	1
14	302-2	Grease Fitting	3
15	32146-20	Nut – Hex Lock Jam	3
16	7-4150	Washer	3
17	27-0970	Pulley	3

Ref. No.	Part No.	Description	No. Used
18	253-139	Seal – Wave	6
19	46-8530	Bearing Assembly	3
20	3231-22	Bolt – Carriage	18
21	27-7680	Ring Deck Support	3
22	27-0880	Housing – Spindle	3
23	32128-21	Nut – Locking Flange	18
24	27-0920	Spindle Shaft	3
25	27-0990	Blade	3
26	27-1000	Cup – Anti Scalp	3
27	3253-27	Washer – Lock	3
28	44-2200	Screw – Blade	3
29	27-0950	Spacer – Spindle Bearing	3
30	26-7960	Decal – Caution	1
31	42-4650	Cutting Deck	1
32	40-6400	Shaft – Roller	1
33	3272-11	Pin – Cotter	2
34	29-4820	Roller	2

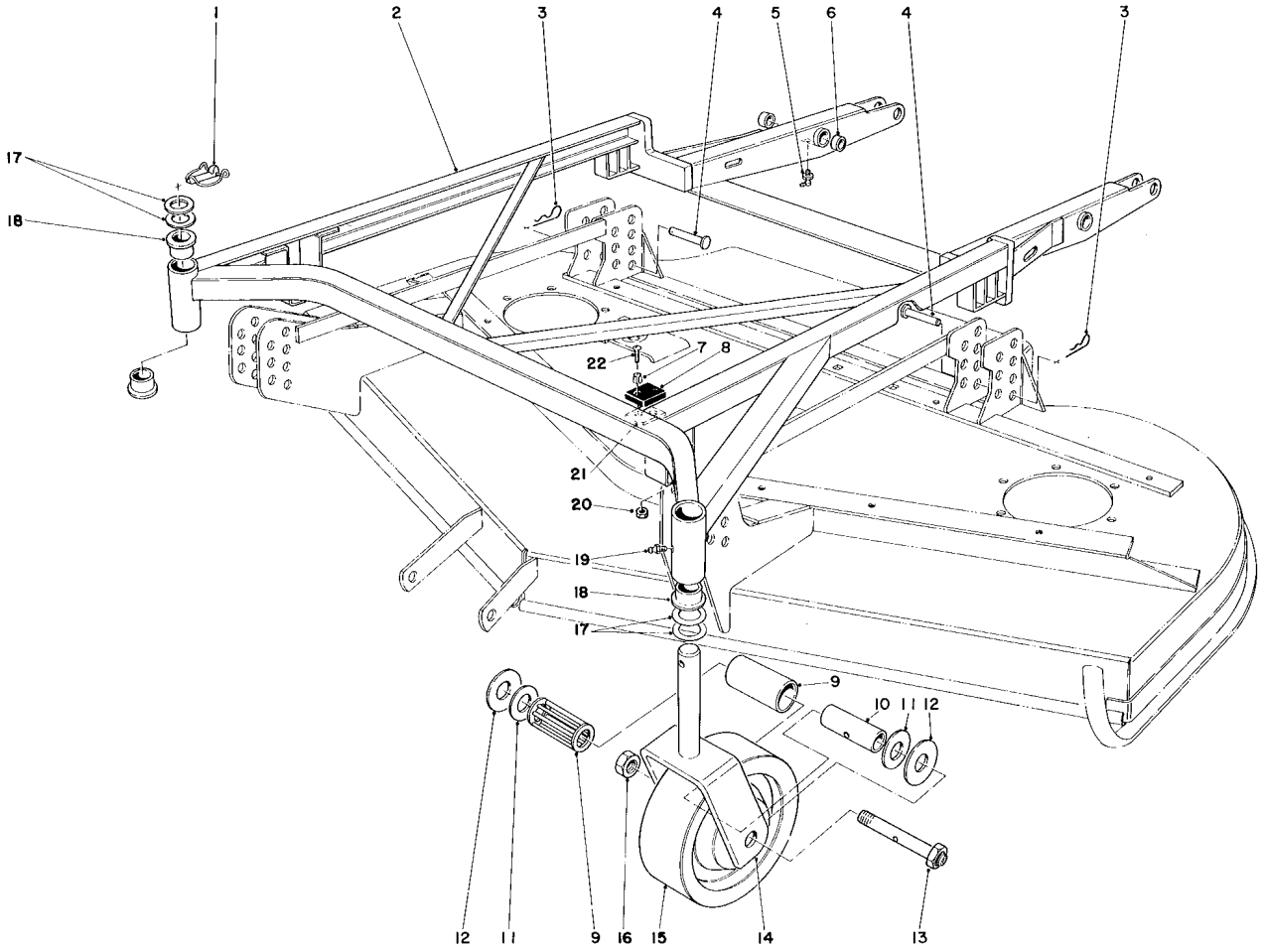

CUTTING UNIT MODEL NO. 30560 (Continued)

Ref. No.	Part No.	Description	No. Used
1	3290-384	Lynch Pin	2
2	44-2170	Frame – Deck Assembly (Incl. Ref. #5, 6 & 18)	1
3	3290-355	Pin – Hair	4
4	283-55	Pin Clevis	4
5	302-40	Grease Fitting	2
6	256-101	Bushing	4
7	40-9520	Spacer – Split	4
8	40-0330	Cushion Rubber	2
9	27-1210	Roller Bearing	2
10	46-8640	Spanner Bushing	2
11	27-1180	Bearing Retainer	4

Ref. No.	Part No.	Description	No. Used
12	27-1170	Thrust Washer	4
13	46-8140	Axle	2
14	40-0370	Front Castor Fork	2
15	46-8230	Wheel Assembly (Incl. Ref. #9-12)	2
16	32146-20	Nut – Lock	2
17	3-6781	Washer – Thrust	8
18	28-9290	Bushing – Special	4
19	302-5	Fitting – Grease	2
20	3296-2	Nut – Lock	4
21	42-6200	Shim – Cushion	3
22	32122-28	Screw – Machine Truss Hd.	4

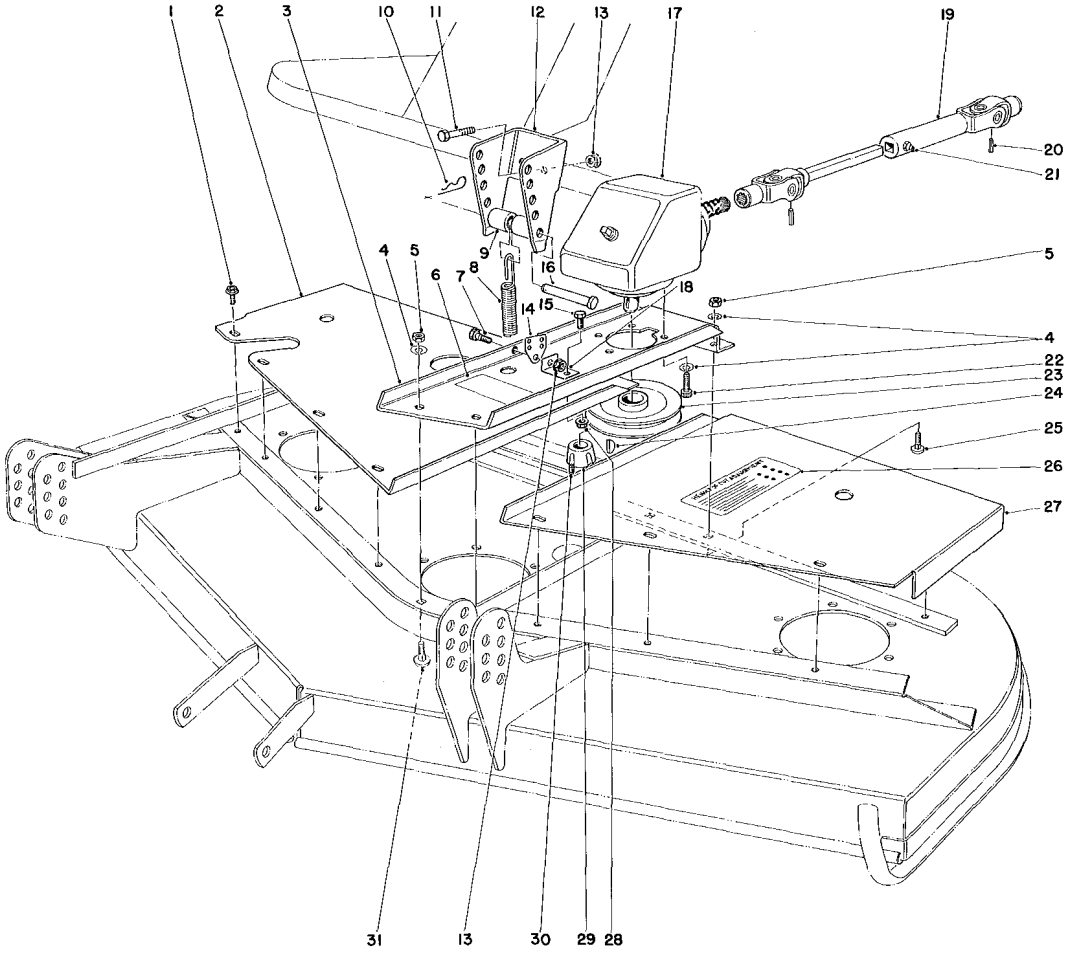

CUTTING UNIT MODEL NO. 30560 (Continued)

Ref. No.	Part No.	Description	No. Used
1	46-8560	Screw Self Tapping Flange Hex. Hd.	11
2	40-0410	Cover R.H.	1
3	40-0360	Base – Gear Box	1
4	3253-21	Washer – Lock	9
5	3217-7	Nut	4
6	44-6470	Decal – Caution	1
7	46-3380	Shoulder Bolt	1
8	46-3200	Spring – Extension	1
9	40-0300	Spacer	1
10	3290-355	Pin – Hair	1
11	323-11	Capscrew	2
12	46-2620	Bracket – Spring	1
13	3290-357	Nut – Lock	3
14	46-3190	End – Spring	1
15	322-4	Screw – Cap Hex Hd.	2
16	283-55	Clevis Pin	1

Ref. No.	Part No.	Description	No. Used
17	8-0909	Gear Box	1
18	46-3590	Bracket – Extension	1
19	27-4520	Universal Drive Shaft	1
20	32121-34	Pin – Roll	2
21	302-5	Grease Fitting	1
22	3274-1	Capscrew Socket Hd.	5
23	27-6110	Pulley	1
24	3257-5	Key Woodruff	1
25	3231-2	Bolt – Carriage	2
26	42-6860	Decal – Height of Cut	1
27	42-4660	Cover L.H.	1
28	32128-20	Nut – Lock Flange Hex	2
29	27-6140	Bushing – Taper Lock	1
30	3245-9	Set Screw Socket Hd.	1
31	3231-27	Bolt – Carriage	2

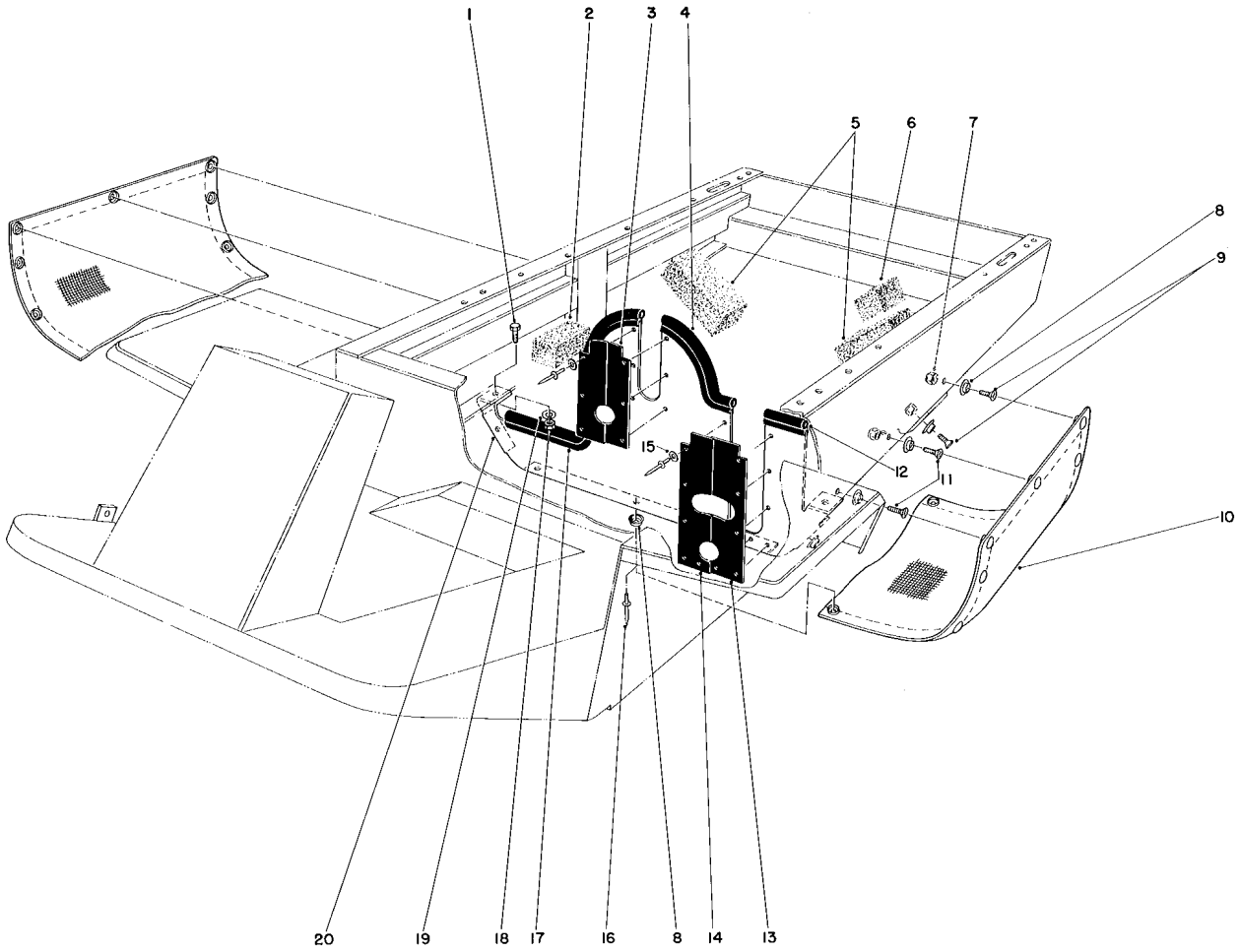

CUTTING UNIT MODEL NO. 30560 (Continued)

Ref. No.	Part No.	Description	No. Used
1	323-5	Screw – Cap Hex Hd.	4
2	46-8130	Foam Sides	2
3	46-8170	Flap – Rubber, Drive Coupling	2
4	46-8200	Seal Trim	1
5	46-8110	Foam – Rear	2
6	46-8120	Foam – Rear	1
7	3296-9	Nut – Lock	7
8	41-9060	Stud – Snap	21
9	32108-99	Screw – Flat Hd.	7
10	41-8920	Screen – Grass	1
11	32104-91	Screw Self Tapping Phillips Flat Hd.	4

Ref. No.	Part No.	Description	No. Used
12	46-8190	Seal – Trim	1
13	46-8150	Flap – Rubber P.T.O. L.H.	1
14	46-8160	Flap – Rubber P.T.O. R.H.	1
15	5-1254	Washer	16
16	3290-55	Rivet – Pop	21
17	46-8210	Seal – Trim	1
18	3217-7	Nut	4
19	3253-29	Washer – Lock	4
20	46-8180	Shield Assembly Front (Incl. Ref. #3-4, 8, & 12-17)	1

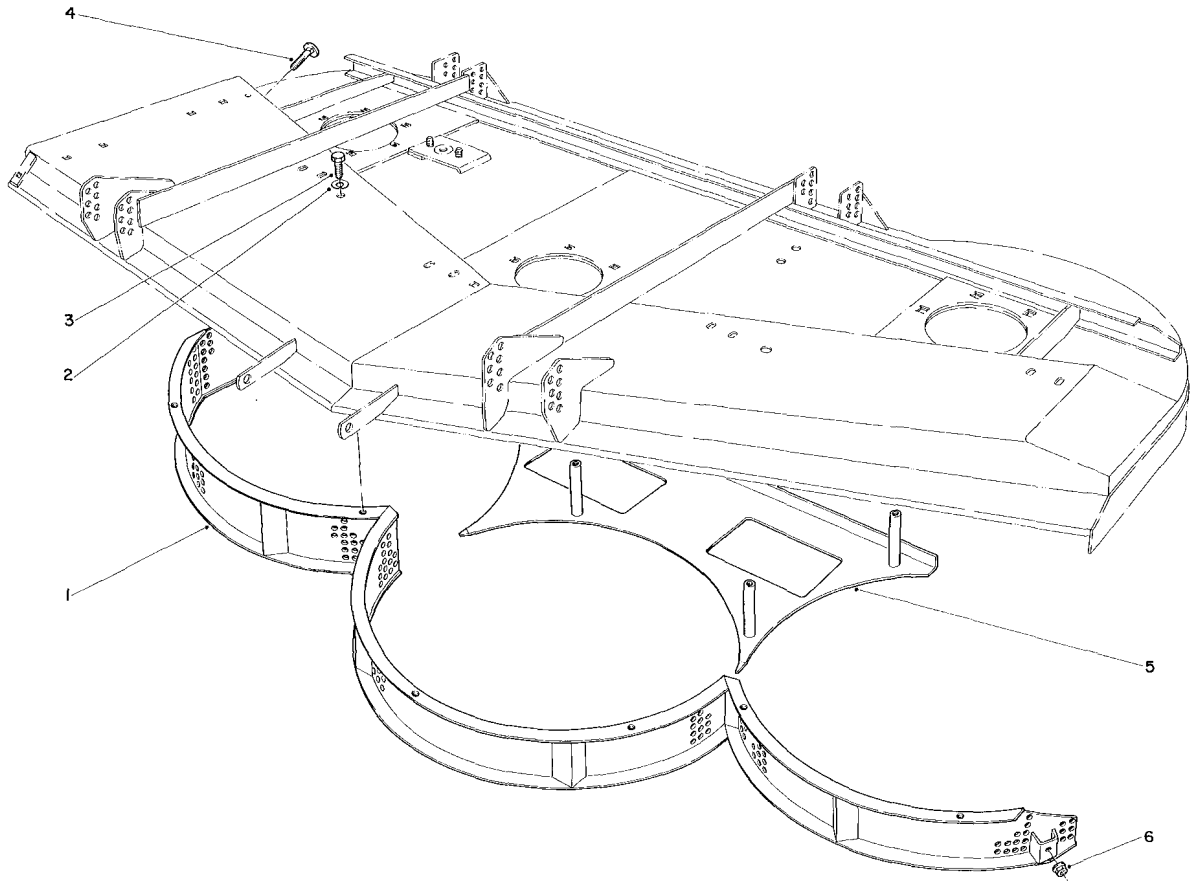

MULCHER KIT MODEL NO. 30792 (Optional)

(Used With Model 30562 Cutting Unit)

Ref. No.	Part No.	Description	No. Used
1	46-3010	Mulcher Screen	1
2	3253-21	Washer – Lock	10
3	323-4	Capscrew – Hex. Hd.	11

Ref. No.	Part No.	Description	No. Used
4	3230-2	Bolt – Carriage	1
5	46-3150	Shelf – Bottom Rear	1
6	3290-357	Nut – Lock Hex Flange	6

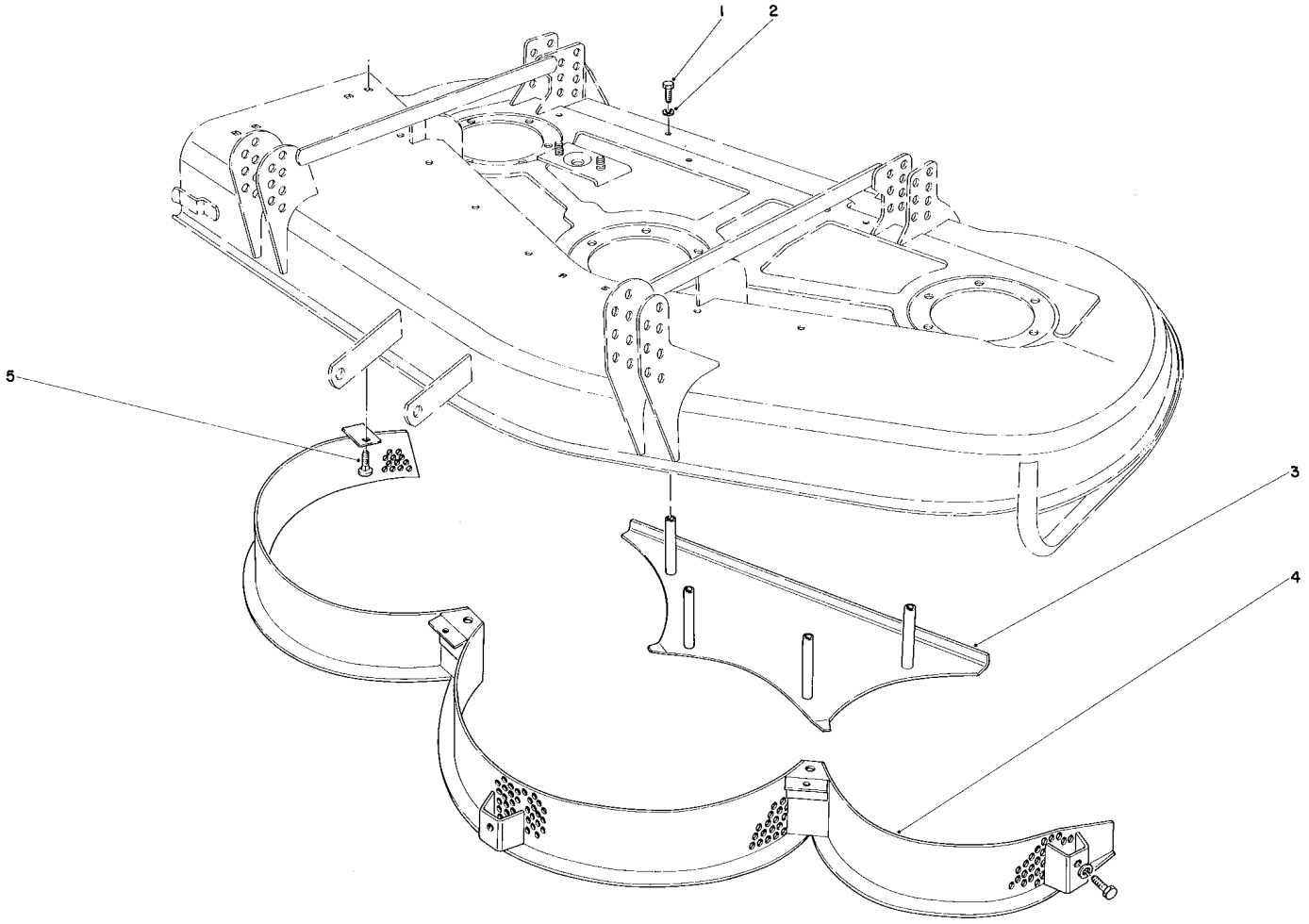

MULCHER KIT MODEL NO. 30700 (Optional)

(For Cutting Unit Model 30555)

Ref. No.	Part No.	Description	No. Used
1	323-6	Capscrew	8
2	3253-21	Lockwasher	8
3	42-6340	Bottom Rear Shelf	1

Ref. No.	Part No.	Description	No. Used
4	42-6310	Mulcher Screen	1
5	3230-1	Carriage Bolt	1

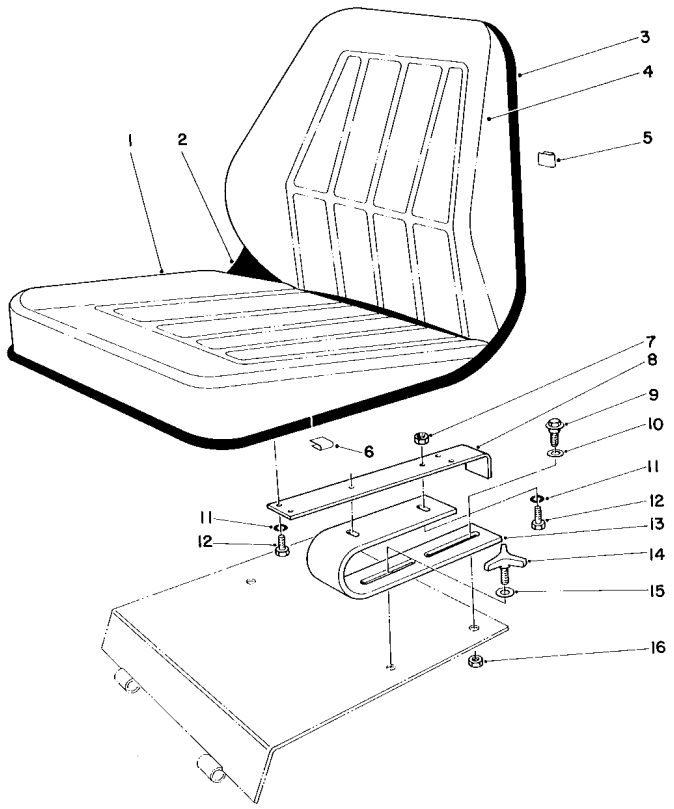

SEAT KIT NO. 30764

Ref. No.	Part No.	Description	No. Used
1	351-76	Seat – Cushion (Incl. Ref. #5 & 6)	1
2	351-77	Shell	1
3	351-78	Edging	2
4	351-75	Backrest (Incl. Ref. #5 & 6)	1
5	351-79	Clip	6
6	351-80	Clip	1
7	3217-6	Nut – Hex	4
8	46-9120	Mount – Seat	2

Ref. No.	Part No.	Description	No. Used
9	27-5240	Bolt – Shoulder	2
10	3256-26	Washer – Plain	2
11	3253-4	Washer – Lock	8
12	322-5	Screw – Cap Hex Hd.	8
13	46-9110	Spring – Seat	2
14	27-4570	Handle – Adjustment	2
15	36-8020	Washer	2
16	3296-39	Nut – Lock	2
*	49-8130	Seat Assembly (Incl. Ref. #1-6)	1

*Not Illustrated

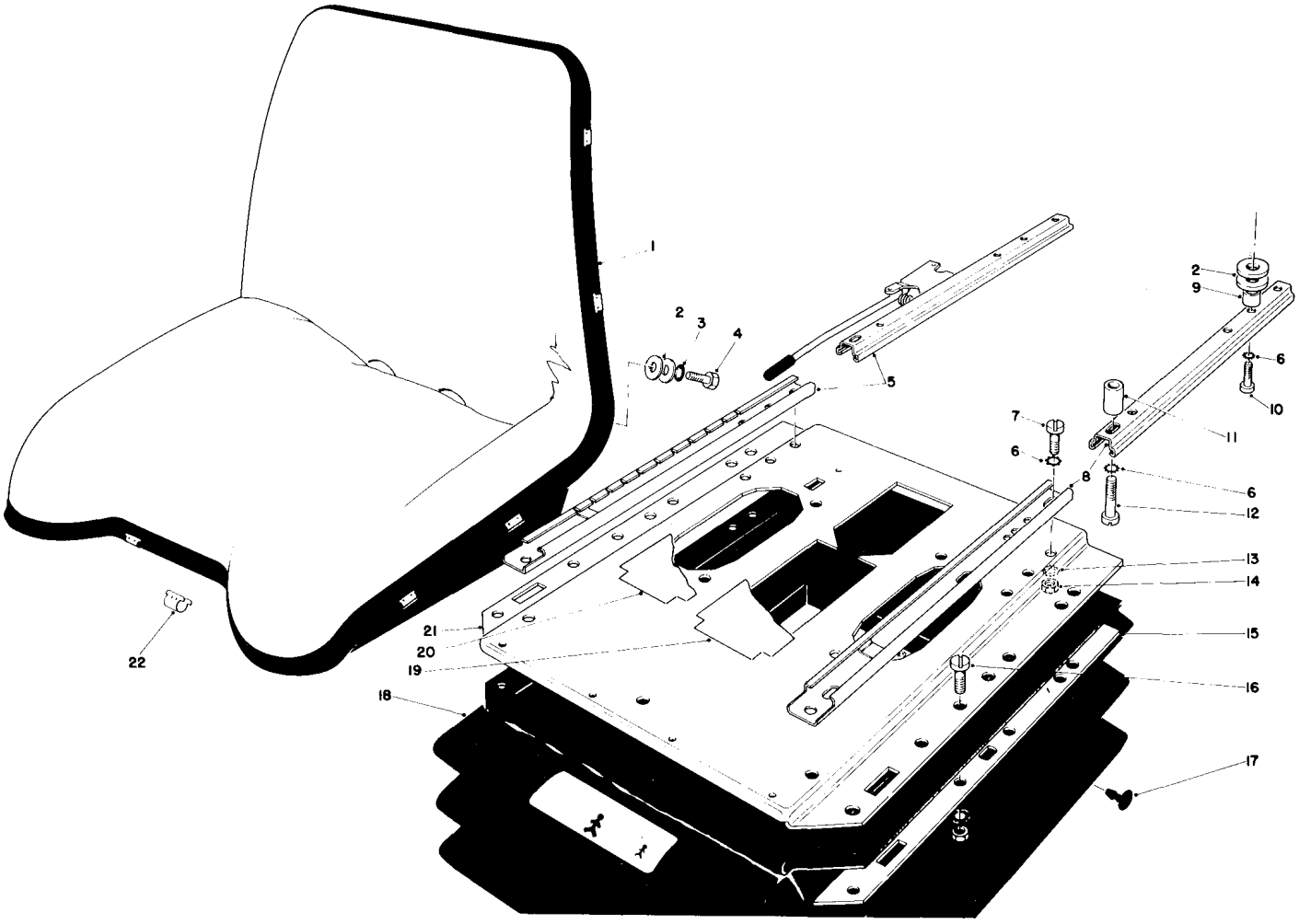

DELUXE SEAT KIT MODEL NO. 30786

Ref. No.	Part No.	Description	No. Used
1	39-5730	Seat Bucket Complete	1
2	39-5690	Washer 13 MM	8
3	39-5680	Serrated Washer	2
4	39-5670	Capscrew 7/16 – 20 U.N.F.	2
5	40-3790	Adjustment Track & Latch	1
6	40-3800	Serrated Washer	8
7	40-3810	Cylinder Bolt M8X16	4
8	40-3820	Adjustment Track	1
9	40-3830	Sleeve	2
10	40-3840	Cylinder Bolt M8X25MM	2
11	40-3850	Sleeve	2
12	40-3860	Cylinder Bolt	2

Ref. No.	Part No.	Description	No. Used
13	40-3870	Spring Washer	6
14	40-3880	Nut M8	6
15	40-3890	Trim	2
16	39-9220	Capscrew M8X16	6
17	39-5710	Plug	24
18	40-3900	Rubber Bellows	1
19	40-3910	Cover – Center	1
20	40-3920	Cover	2
21	40-3930	Upper Suspension Plate Complete	1
22	39-9540	Outside Bead Clip	13
*	37-9630	Seat ASM – Complete	1

*Not Illustrated

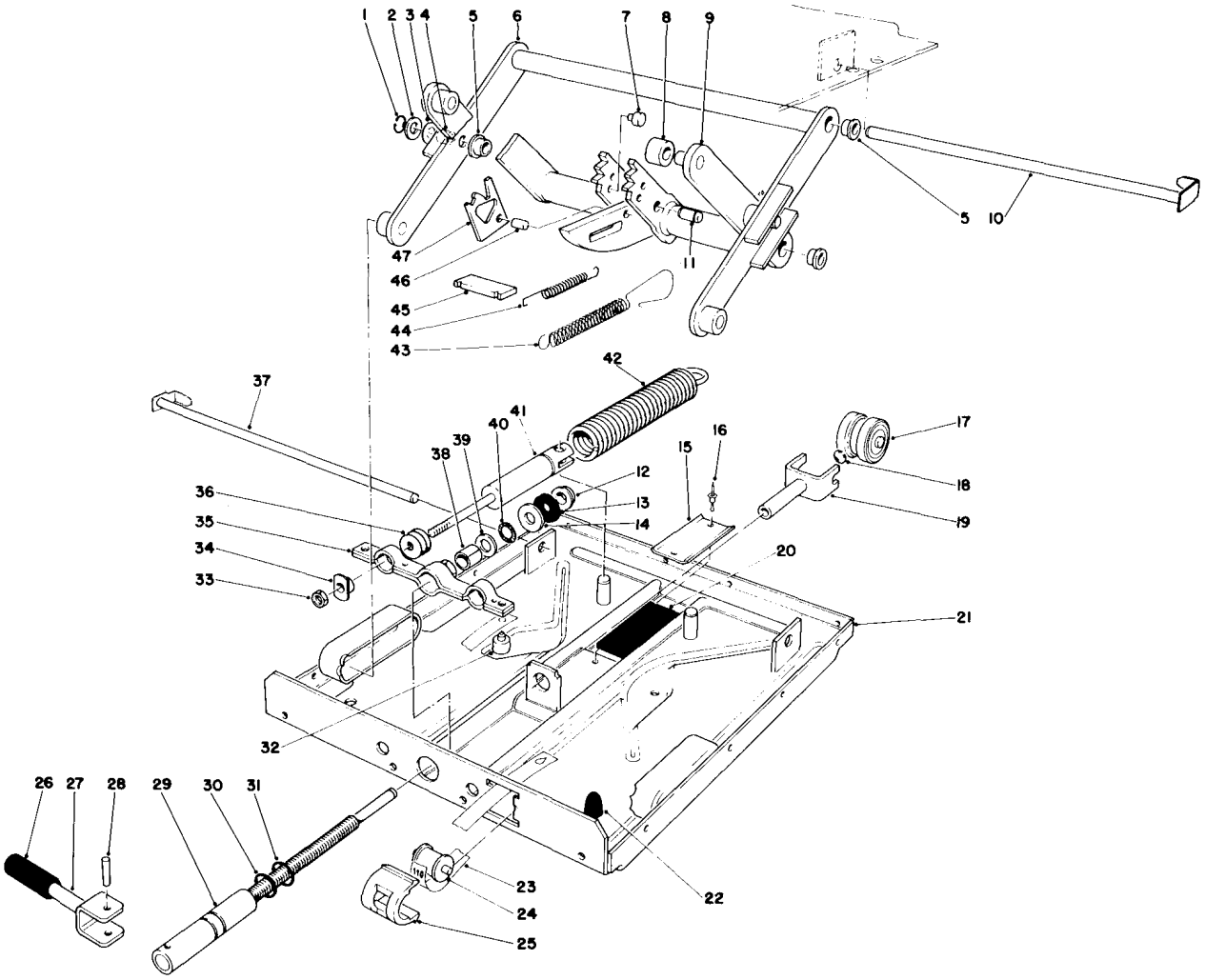

DELUXE SEAT KIT MODEL NO. 30786 (Continued)

Ref. No.	Part No.	Description	No. Used
1	40-3950	Washer	2
2	39-9500	Washer 13 MM	2
3	40-3960	Washer	2
4	40-3970	Bearing Bushing	2
5	40-3980	Bearing	4
6	40-3990	Swing Arm – Outside	1
7	40-4000	Bolt	2
8	40-4010	Roller	4
9	40-4020	Swing Arm Inside	1
10	40-4030	Pin	1
11	40-4040	Grooved Locking Pin 08X16MM	2
12	40-4050	Sleeve	1
13	40-4060	Rubber Washer	1
14	40-4070	Washer 8 MM	1
15	40-4080	U-Track	1
16	40-4090	Plate 4X 10MM	2
17	40-4100	Trible-Bearing	1
18	39-9310	Retaining Ring	1
19	40-4110	Fork	1
20	40-4120	Rubber Plate	1
21	40-4130	Lower Suspension Plate – Complete (Incl. Ref. #15 - 16 & 20)	1
22	39-9520	Rubber Bumper	2

Ref. No.	Part No.	Description	No. Used
23	40-4140	Weight Indicator Band	1
24	40-4150	Roller	1
25	40-4160	Guide Sleeve	1
26	40-4170	Handle	1
27	40-4180	Toggle	1
28	40-4190	Grooved Pin 5X28MM	1
29	40-4200	Pin	1
30	40-4210	Rubber Ring 14MM Black	1
31	40-4220	Rubber Ring 14MM Red	1
32	40-4230	Plug	1
33	40-4240	Nut	2
34	40-4250	Weld Nut	2
35	40-4260	Spring Bracket	1
36	40-4270	Threaded Rod	2
37	40-4280	Pin	1
38	40-4290	Sleeve 14X 1X 19MM	1
39	40-4300	Washer	1
40	40-4310	Thrust Needle Bearing	1
41	40-4320	Shock Absorber	2
42	40-4330	Coil Spring	2
43	40-4340	Coil Spring	1
44	40-4350	Coil Spring	2
45	40-4360	Plate	1
46	40-4370	Bolt	1
47	40-4380	Release Bracket	2

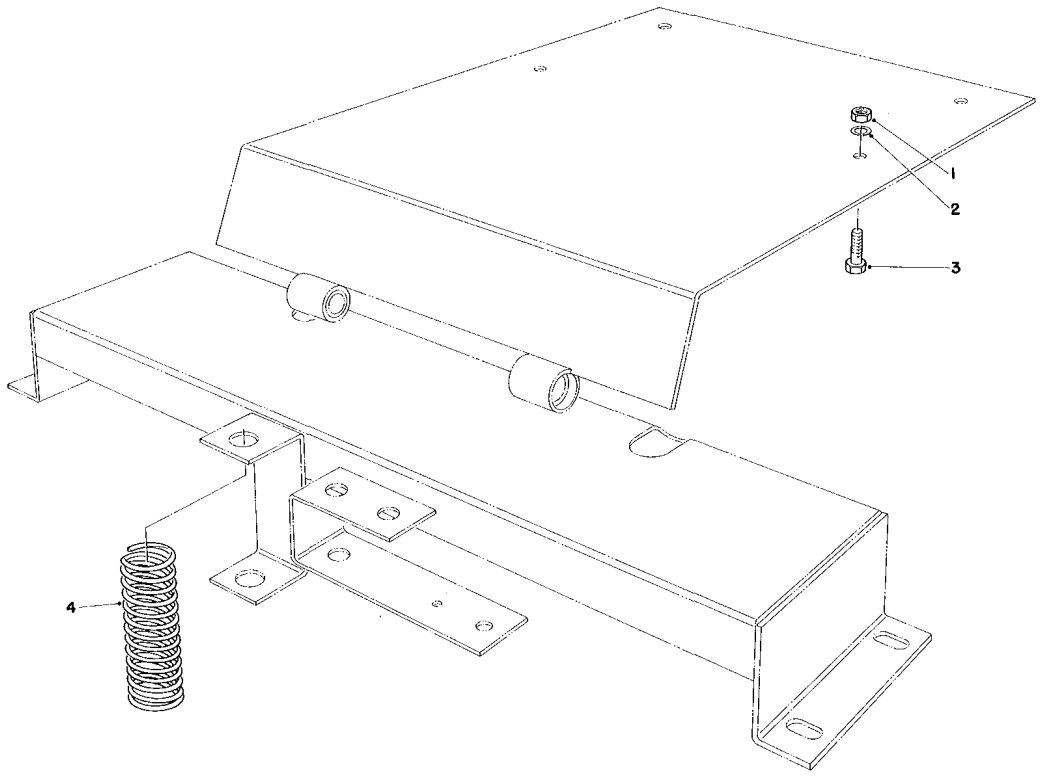

DELUXE SEAT KIT MODEL NO. 30786 (Continued)

Ref. No.	Part No.	Description	No. Used
1	3217-6	Nut	4
2	3253-24	Lockwasher	4

Ref. No.	Part No.	Description	No. Used
3	322-3	Capscrew	4
4	37-9780	Spring – Compression	1

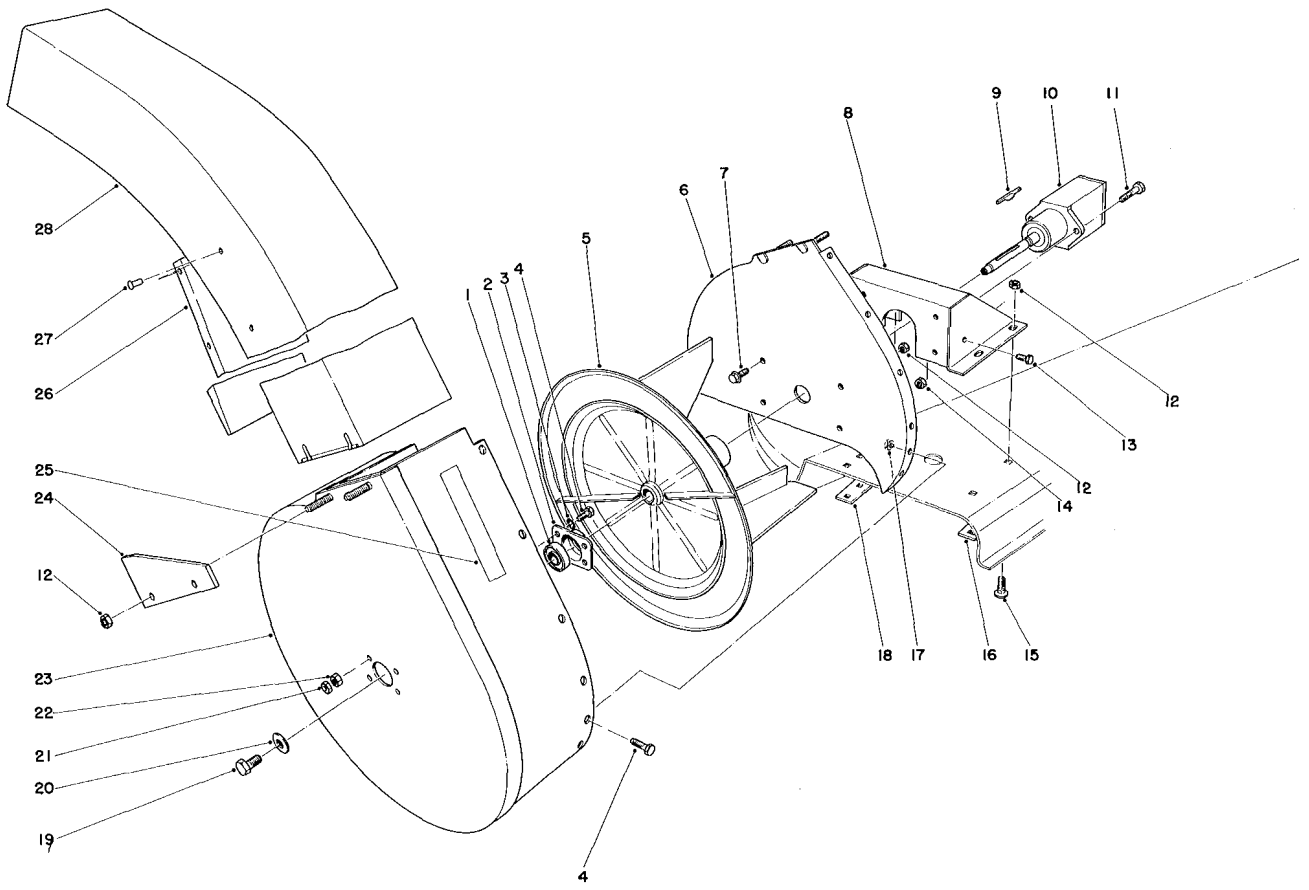

GRASS COLLECTION SYSTEM MODEL NO. 30557

(For Cutting Unit Model 30555)

Ref. No.	Part No.	Description	No. Used
1	38-7820	Ball Bearing	1
2	37-6730	Cup Bearing	1
3	3254-8	Washer – Lock Int. Tooth	4
4	321-3	Capscrew	14
5	43-0870	Impeller	1
6	44-5250	Mounting Plate	1
7	3234-5	Screw – Cap Hex Hd. Locking Flange	4
8	44-1050	Gear Box Bracket	1
9	3257-40	Key – Hi Pro	1
10	43-0810	Gear Box Assembly	1
11	323-6	Screw – Cap Hex Head	2
12	32152-1	Locknut	12
13	321-2	Capscrew	2
14	32152-2	Locknut	2
15	3230-1	Bolt Carriage	4
16	44-5450	Plate – Bracket R.H.	1

Ref. No.	Part No.	Description	No. Used
17	32152-4	Locknut	10
18	44-5460	Plate – Bracket L.H.	1
19	36-4030	Screw – Cap Hex Hd. Nylon Patch	1
20	43-0940	Spacer – Blower Hub	1
21	3218-1	Nut – Jam	4
22	3217-5	Nut – Hex	4
23	11-2839	Housing – Blower (Incl. Ref. #24)	1
24	43-0960	Bracket Chute	2
25	43-1110	Decal Warning	1
26		Deflector – Chute	1
27	3290-409	Rivet Pop	8
28	44-5300	Chute Assembly (Incl. Ref. #26 & 27)	1
*	46-8650	Template – Blower	1

*Not Illustrated

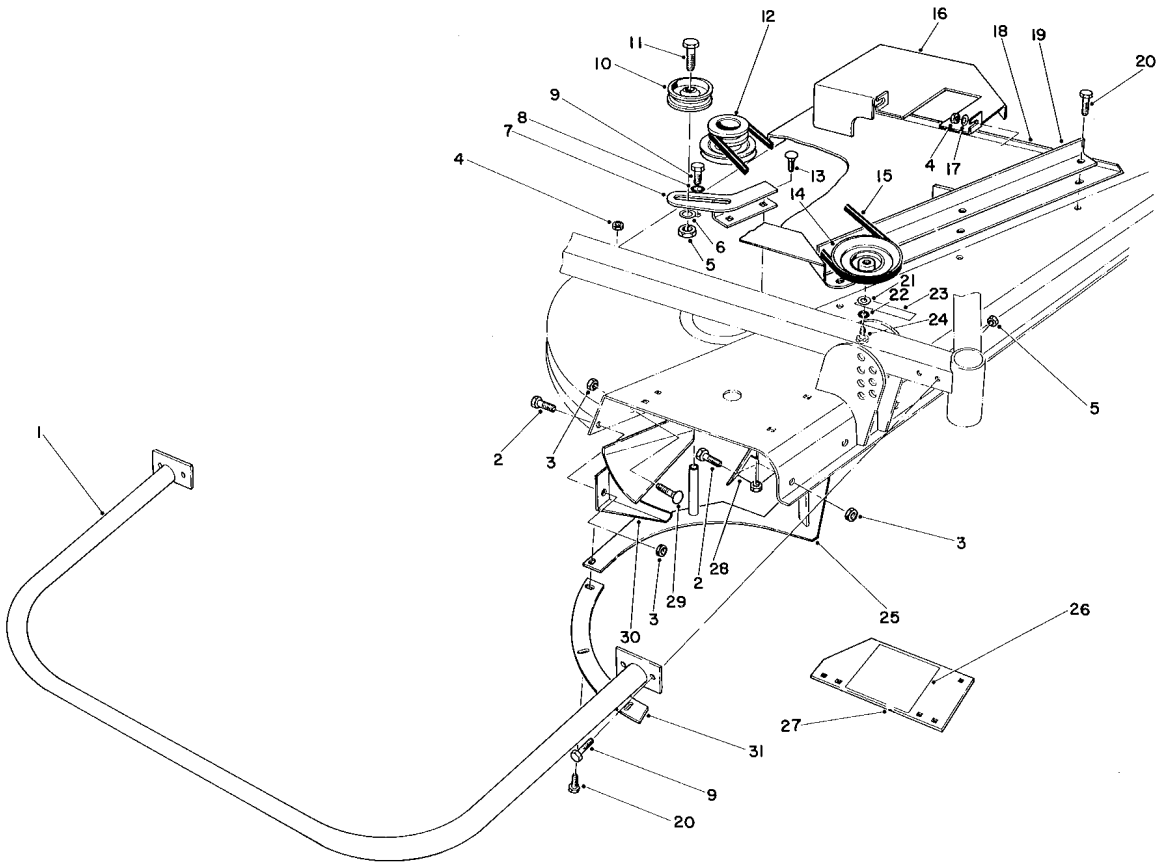

GRASS COLLECTION SYSTEM MODEL NO. 30557 (Continued)

(For Cutting Unit Model 30555)

Ref. No.	Part No.	Description	No. Used
1	44-7570	Bumper	1
2	322-4	Capscrew	4
3	32152-1	Locknut	6
4	32152-4	Locknut	6
5	32152-2	Locknut	5
6	3256-3	Washer	1
7	43-0970	Bracket Idler	1
8	3253-21	Lockwasher	4
9	323-6	Capscrew	8
10	43-1040	Pulley Idler	1
11	323-9	Capscrew	1
12	43-0770	Pulley	1
13	3231-25	Carriage Bolt	2
14	44-5350	Pulley	1
15	43-1030	V-Belt	1
16	43-1200	Cover Blower Drive	1
17	3256-16	Washer	2

Ref. No.	Part No.	Description	No. Used
18	43-1160	Cover – Right	1
19	43-1130	Spring Bracket	1
20	321-4	Capscrew	7
21	5-2958	Washer	1
22	3253-3	Lockwasher	1
23	43-1120	Decal Warning	1
24	3235-18	Capscrew – Locking Patch	1
25	44-7770	Rear Shelf	1
26	40-5730	Decal – Caution	1
27	44-5750	Cover Plate (Incl. Ref. #26)	1
28	46-2350	Front Deflector	1
29	3230-1	Bolt – Carriage	2
30	43-1060	Deflector Rear	1
31	44-7780	Shelf R.H.	1
*	44-5480	Blade – High Sail (18") Optional	3

*Not Illustrated

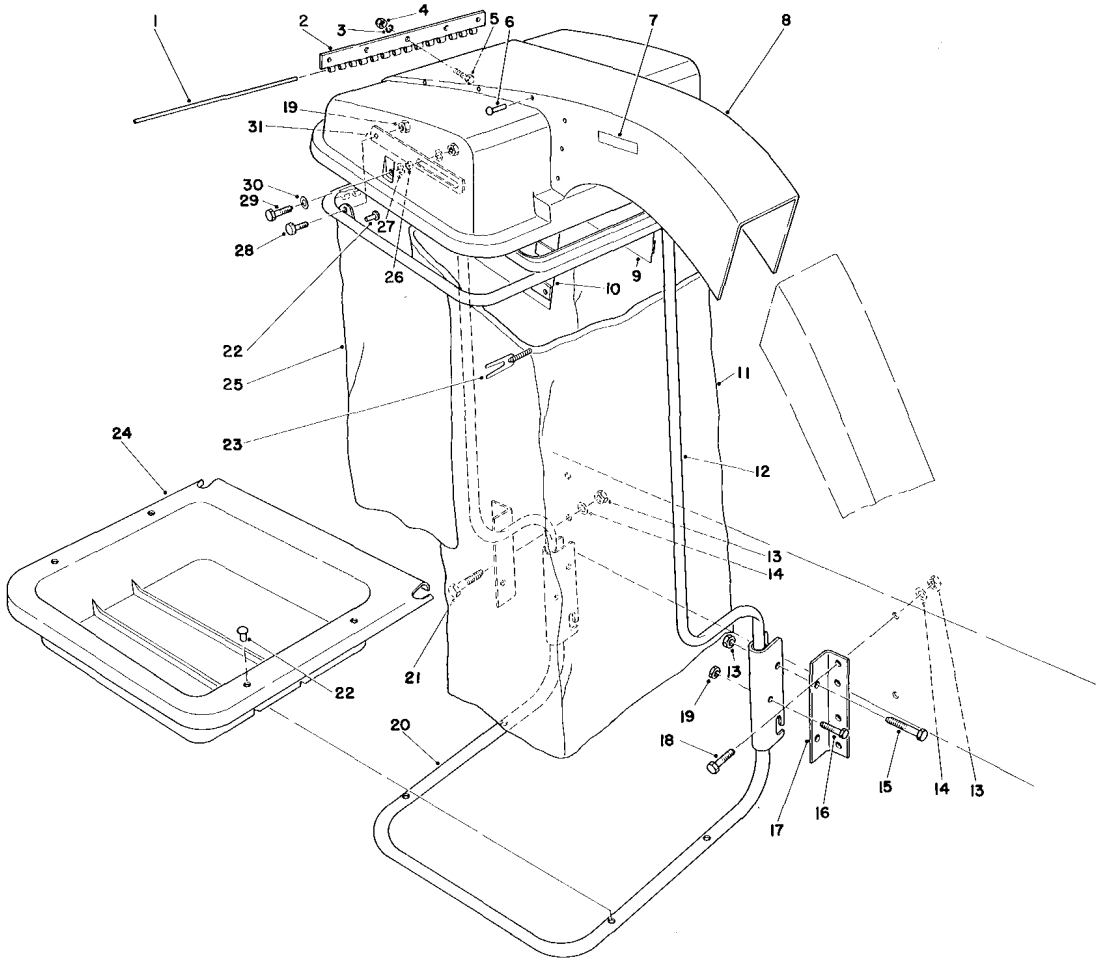

GRASS COLLECTION SYSTEM MODEL NO. 30557 (Continued)

(For Cutting Unit Model 30555)

Ref. No.	Part No.	Description	No. Used
1	43-1000	Hinge Pin Hood	1
2		Hinge – Half	1
3	3256-14	Washer	5
4	3296-2	Locknut	5
5	3290-134	Screw Machine	5
6	3290-412	Rivet	14
7	43-1100	Decal – Caution	2
8	11-2829	Hood Assembly (Incl. Ref. #2-7, 9 & 10)	1
9	43-0600	Screen Left Hand	1
10	43-0570	Screen Right Hand	1
11	43-0990	Bag – Cloth 32"	1
*	43-0980	Bag – Cloth 38" (optional)	1
12	43-0620	Support Tube Assy. Upper (Incl. Ref. #22 & 25)	1
13	32152-2	Locknut	12
14	3256-3	Washer	8
15	323-11	Capscrew	4
16	322-11	Capscrew	2

Ref. No.	Part No.	Description	No. Used
17	43-1010	Bracket – Frame	4
18	323-7	Capscrew	7
19	32152-1	Locknut	6
20	43-0720	Support Tube Assy. – Lower (Incl. Ref. #22 & 24)	1
21	323-10	Capscrew	1
22	3290-409	Rivet Pop	21
23	3-2781	Retainer – Cord	1
*+	36-7770	Cord Retainer (optional)	1
24		Tray Lower	1
25		Skirt – Bagging Frame	1
26	43-1020	Spacer	2
27	3256-57	Washer	4
28	322-3	Capscrew	2
29	322-4	Capscrew	2
30	3256-56	Washer	2
31	43-1050	Stop – Hood	2
*	44-9720	Template Bracket	1

*Not Illustrated

+For use with 30 gallon plastic bags.

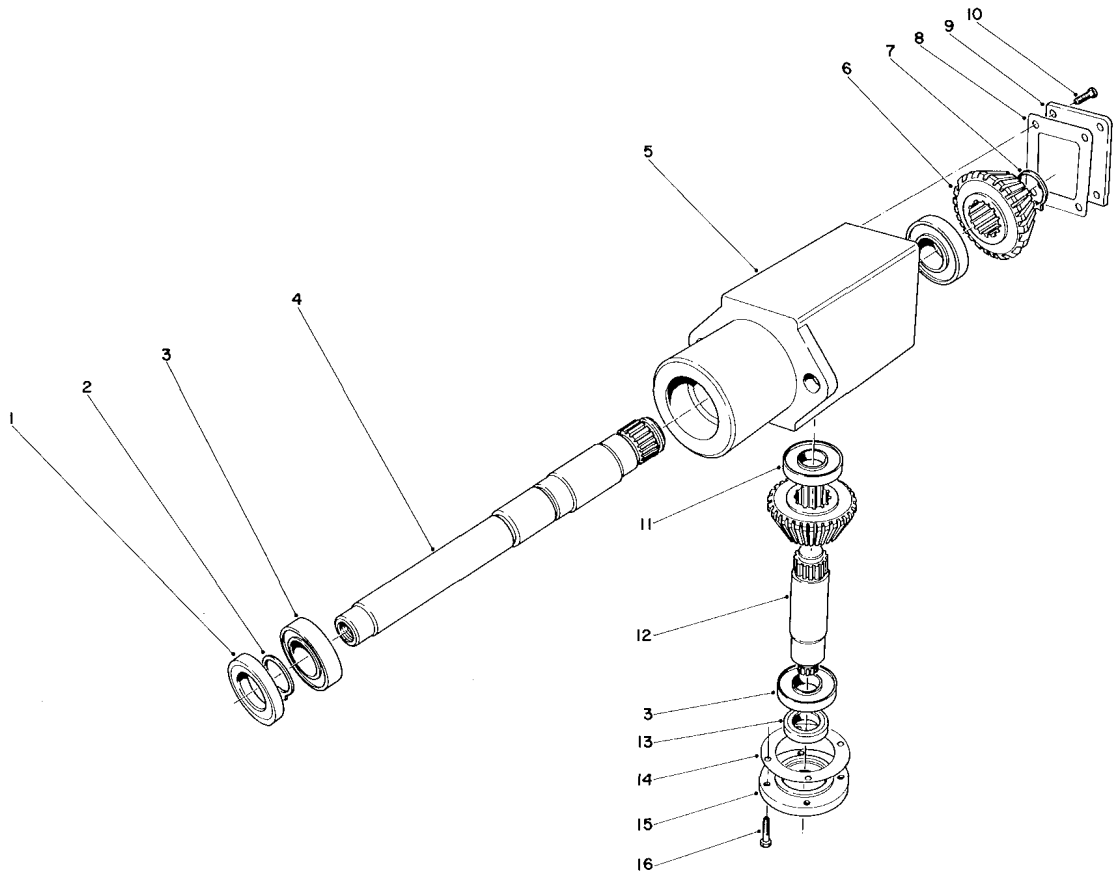

GRASS COLLECTION SYSTEM MODEL NO. 30557 (Continued)

(For Cutting Unit Model 30555)

Ref. No.	Part No.	Description	No. Used
1	788029	Oil Seal	1
2	788019	Snap Ring	1
3	780034	Ball Bearing	3
4	776211	Shaft, Output	1
5	770026	Housing, Right Angle Drive	1
6	778046	Gear, Miter	2
7	788018	Ring, Snap	1
8	788028	Gasket, Cover	1
9	772035	Cover	1
10	792025	Screw, Rd. Hd. Self Tapping	4

Ref. No.	Part No.	Description	No. Used
11	780024	Bearing, Ball	1
12	776210	Shaft, Input	1
13	788031	Seal, Oil	1
14	788030	Gasket, Cap	1
15	786029	Cap & Seal Assembly (Incl. Ref. #13 & 16)	1
16†	321-5	Screw, Hex Hd.	4
*†	43-0810	Gear Box Assembly—Complete (Incl. Ref. #1-16)	1

*Not Illustrated

†Obtain from your local Toro Dealer. Obtain all other parts from your local Peerless Dealer.

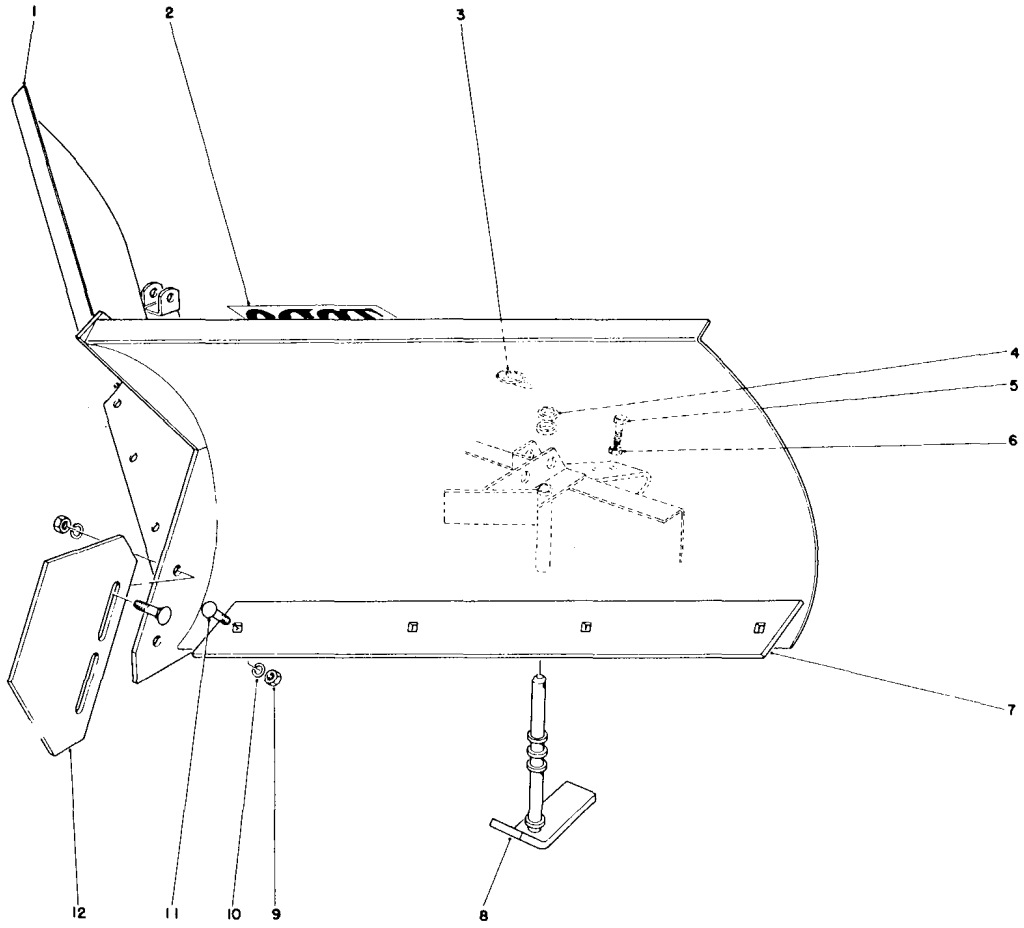

V-PLOW MODEL NO. 30750 (Optional)

Ref. No.	Part No.	Description	No. Used
1	23-9960	V-Plow	1
2	18-2180	Decal	1
3	3290-243	Lynch Pin	2
4	20-4370	Spacer Tubes	10
5	325-6	Capscrew	1
6	3218-5	Jam Nut	1

Ref. No.	Part No.	Description	No. Used
7	24-5570	Scraper Blade	2
8	24-5540	Skid	2
9	3217-9	Nut	10
10	3253-7	Lockwasher	10
11	3233-2	Carriage Bolt	10
12	24-5530	Nose Skid	1

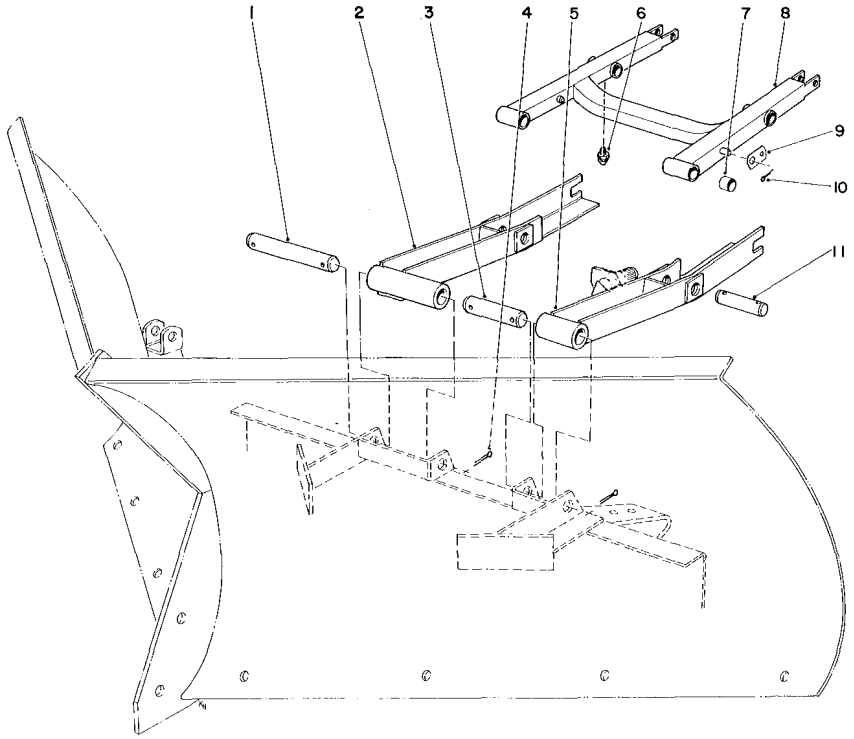

V-PLOW INSTALLATION NO. 30755 (Optional)

Ref. No.	Part No.	Description	No. Used
1	28-5490	Pin R.H.	1
2	28-5510	Push Arm R.H.	1
3	25-1350	Pin L.H.	1
4	3272-23	Cotter Pin	8
5	28-5500	Push Arm L.H.	1
6	302-53	Grease Fitting	2

Ref. No.	Part No.	Description	No. Used
7	256-101	Bushing	8
8†	27-4270	Lift Arm (Incl. Ref. #6 & 7)	1
9†	27-5270	Strap Brake Spring	2
10†	3272-12	Cotter Pin	2
11	28-6460	Pin	2
*	28-5470	Tire Chains	2

*Not Illustrated

†Parts must be ordered for mounting V-Plow on Model No. 30790 order parts separately.

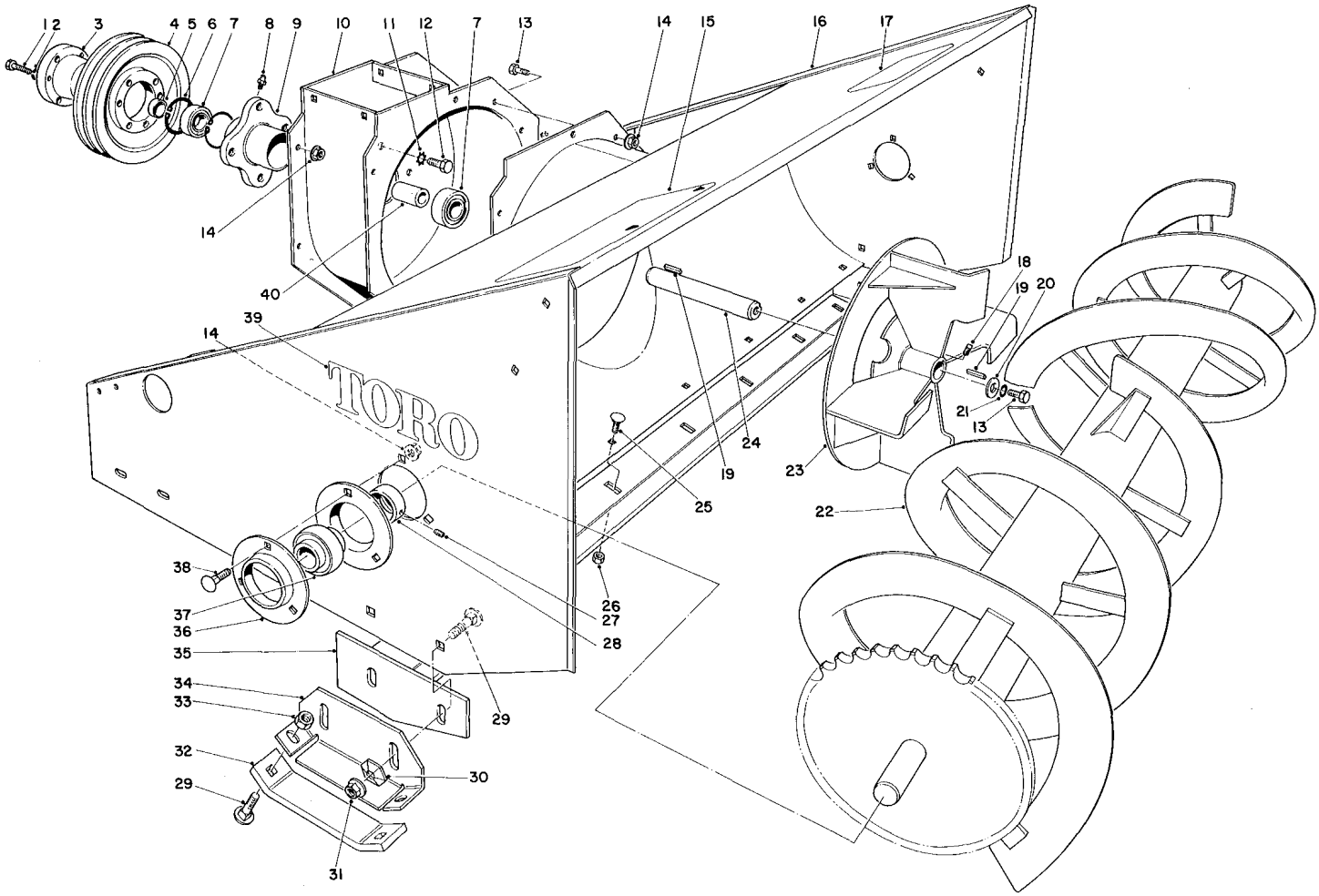

48" SNOWTHROWER MODEL NO. 30570 (Optional)

Ref. No.	Part No.	Description	No. Used
1	321-3	Screw, Cap Hex Hd.	3
2	3253-3	Lockwasher	3
3	46-3650	Hub – "QD" (Incl. Ref. #1 & 2)	1
4	46-3640	Pulley – "QD"	1
5	37-5170	Spacer	1
6	32151-20	Snap Ring	2
7	251-276	Bearing	2
8	302-11	Grease Fitting	1
9	32-4950	Housing Spindle	1
10	39-5030	Blower Housing	1
11	3255-2	Lockwasher	4
12	3213-20	Capscrew	4
13	322-3	Capscrew	9
14	32128-20	Flange Nut	16
15	46-5860	Decal – Rear Weight	1
16	39-5010	Auger Housing	1
17	29-6350	Decal – Warning	1
18	3243-1	Square Head Setscrew	2
19	31-0700	Square Key	2
20	3-6715	Flat Washer	1

Ref. No.	Part No.	Description	No. Used
21	3253-4	Lockwasher	1
22	32-6140	Auger	1
23	32-6130	Impeller	1
24	37-5240	Shaft – Impeller	1
25	3230-19	Carriage Bolt	7
26	3296-47	Locknut	7
27	3245-1	Set Screw	2
28	251-77	Locking Collar	2
29	3231-2	Carriage Bolt	8
30	3290-224	Pyramidal Lockwasher	4
31	32128-18	Flange Nut	4
32	37-5110	Skid – Shoe	2
33	32152-2	Locknut	4
34	37-4950	Skid – Mount Plate	2
35	37-5380	Scraper	1
36	251-287	Flange	4
37	251-253	Bearing (Incl. Ref. #27 & 28)	2
38	3230-18	Carriage Bolt	6
39	27-4600	Decal – Toro	2
40	31-0540	Sleeve	1

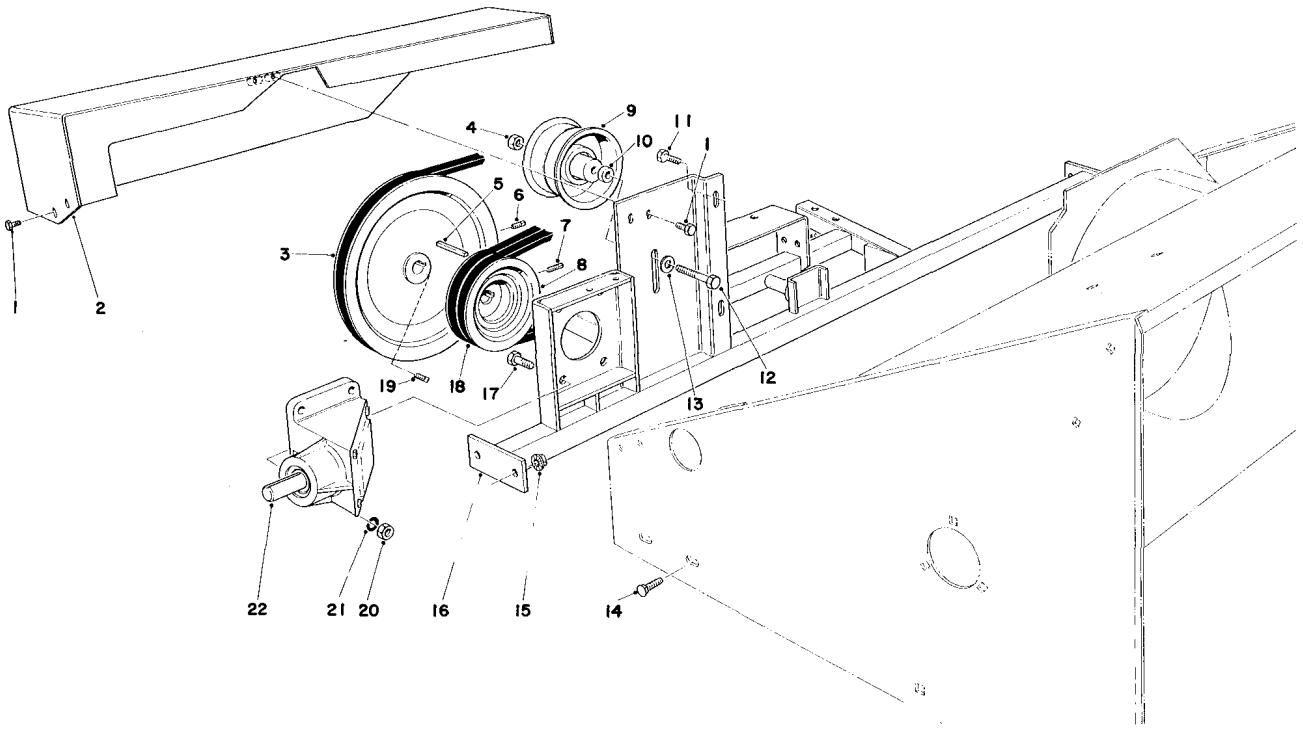

48" SNOWTHROWER MODEL NO. 30570 (Optional)

Ref. No.	Part No.	Description	No. Used
1	3234-13	Flange Screw	4
2	37-5510	Belt Shield	1
3	32-4480	Sheave	1
4	32152-2	Locknut	1
5	3-0971	Key	1
6	3242-2	Sq. Hd. Setscrew	1
7	3242-6	Sq. Hd. Setscrew	2
8	37-5090	Pulley – Gear Box	1
9	37-5760	Idler Pulley	1
10	37-5210	Spacer – Idler	1
11	322-3	Capscrew	2

Ref. No.	Part No.	Description	No. Used
12	323-11	Capscrew	1
13	3256-3	Flatwasher	1
14	3231-30	Carriage Bolt	4
15	3290-357	Hex Locknut	4
16	37-5400	Cross Brace	1
17	323-7	Capscrew	4
18	37-5670	V-Belt (Matched Set of 2)	1
19	3242-4	Sq. Hd. Setscrew	1
20	3217-7	Hexnut	4
21	3253-21	Lockwasher	4
22	37-5410	Gear Box Assembly	1

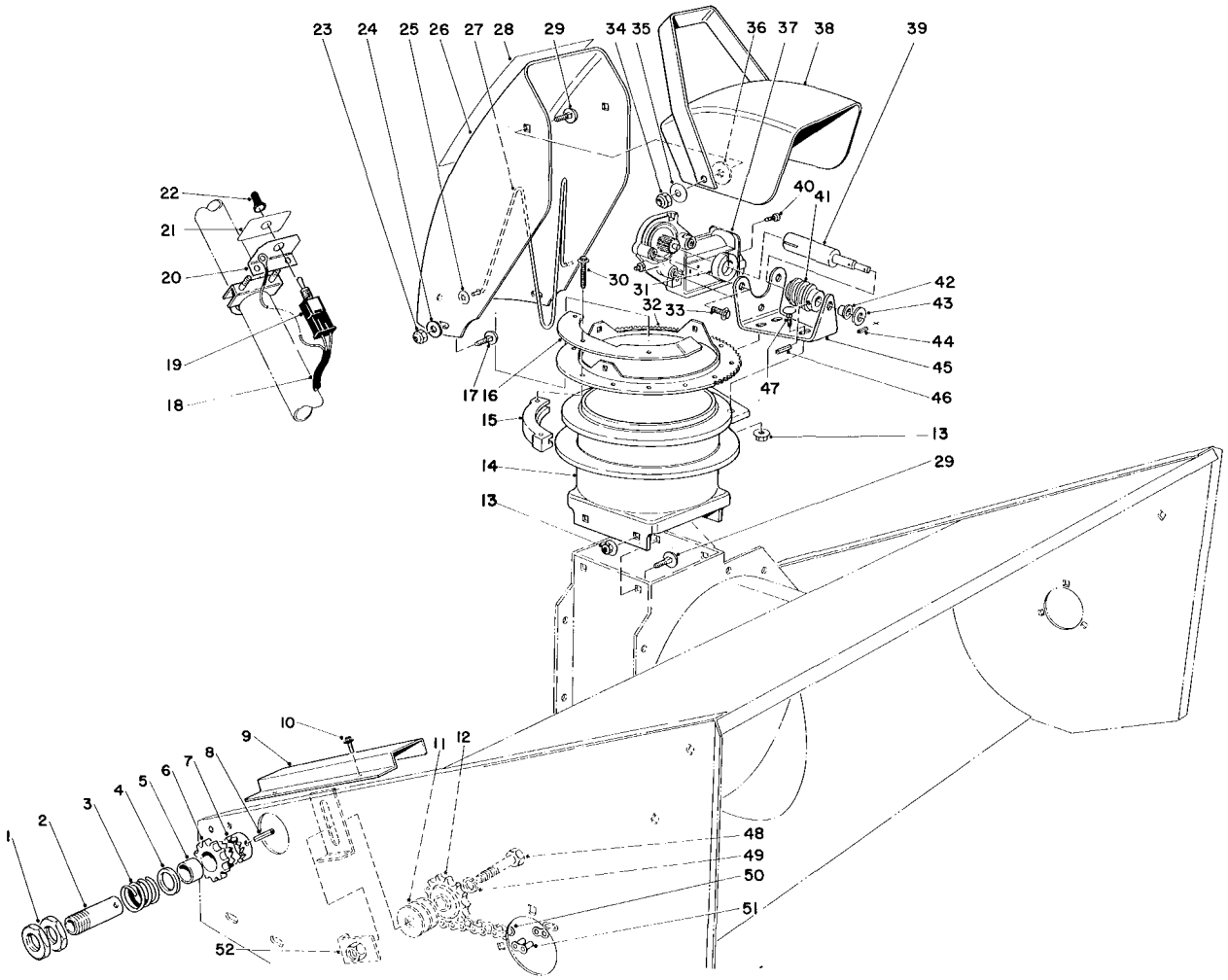

48" SNOWTHROWER MODEL NO. 30570 (Optional)

Ref. No.	Part No.	Description	No. Used
1	37-5720	Nut – Thin	2
2		Clutch Sleeve	1
3		Spring Compression	1
4		Spacer	1
5		Bushing	1
6		Clutch Sprocket	1
7		Clutch Collar	1
8	32121-34	Roll Pin	1
9	32-1620	Chain Cover	1
10	32104-76	Self-Tapping Screw	2
11	3256-7	Flatwasher	3
12	30-0090	Idler Sprocket	1
13	3290-357	Locknut	7
14	39-4870	Chute Transition	1
15	25-5450	Swivel Block	6
16	39-4900	Stop-Chute Rotator	1
17	3230-18	Carriage Bolt	3
18	39-4990	Wire Harness	1
19		Toggle Switch	1
20		Toggle Switch Mount	1
21	39-4970	Decal – Chute Rotation	1
22	218-473	Toggle Switch Boot	1
23	3296-47	Locknut	3
24	3256-23	Flatwasher	3
25	3290-326	Pushnut	2
26	25-5440	Upper Chute	1
27	12-2040	Chute Wire	1
28	29-6350	Decal – Warning	1

Ref. No.	Part No.	Description	No. Used
29	3231-27	Carriage Bolt	6
30	27-0220	Special Screw	12
31	39-4940	Collar	1
32	39-4890	Ring – Chute Swivel	1
33	3234-13	Flange Screw	3
34	32152-2	Locknut	2
35	3290-340	Belleville Washer	2
36	20-4320	Rubber Washer	2
37	39-4920	Gearmotor	1
38	11-7120	Deflector	1
39	39-4930	Shaft – Worm Gear	1
40	3274-26	Socket Head Screw	1
41	8-8600	Worm Gear	1
42	256-255	Bushing	1
43	3256-1	Flatwasher	2
44	32121-20	Roll Pin	1
45	39-4910	Motor Mount	1
46	32121-50	Roll Pin	1
47	3231-2	Carriage Bolt	3
48	327-6	Capscrew	1
49	3253-8	Lockwasher	1
50	30-0160	Chain – Roller	1
51	2710-11	Connecting Link	1
52	30-0450	Nut Plate	1
*	37-5640	Slip Clutch (Incl. Ref. #1-8)	1
*	39-4950	Toggle Switch Assembly (Incl. Ref. #19-22)	1

*Not Illustrated

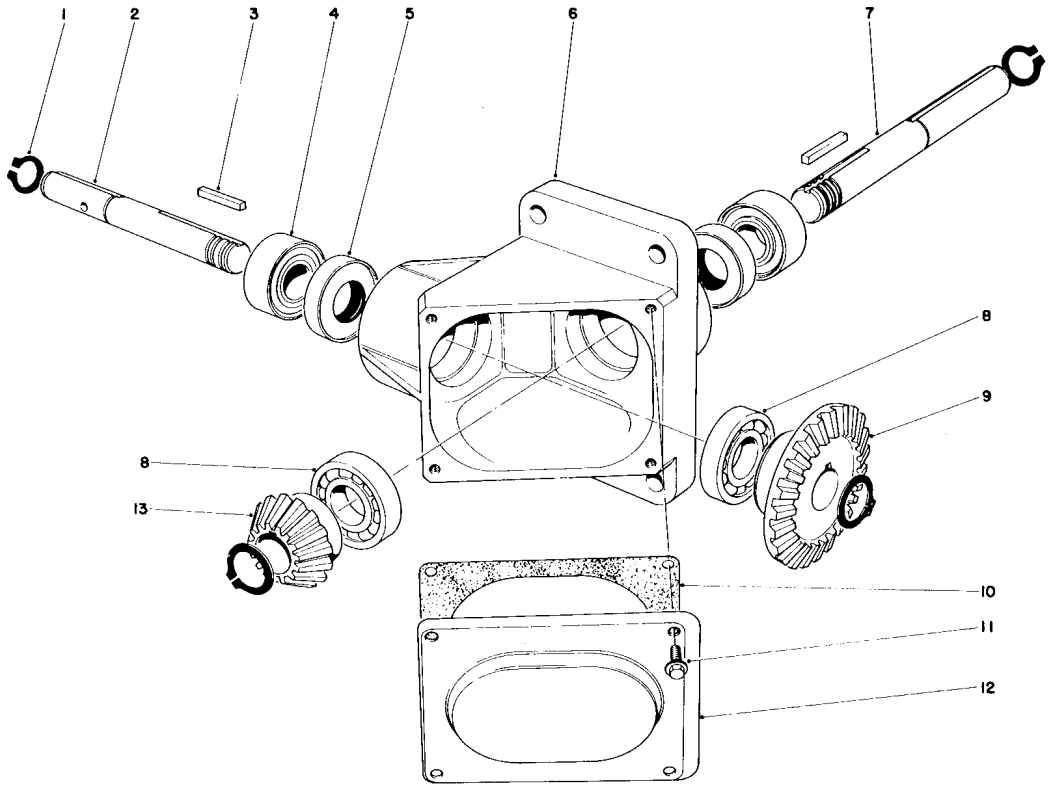

48" SNOWTHROWER MODEL NO. 30570 (Optional)

Ref. No.	Part No.	Description	No. Used
1	32120-72	Retaining Ring	4
2	30-0590	Shaft	1
3	30-0660	Key	2
4	30-0630	Bearing	2
5	30-0640	Oil Seal	2
6	30-0650	Housing	1
7	37-5840	Shaft	1

Ref. No.	Part No.	Description	No. Used
8	30-0620	Bearing	2
9	30-0670	Gear	1
10	30-0680	Gasket – Cover Plate	1
11	12-3270	Screw Special	4
12	30-0690	Cover Plate	1
13	30-0600	Gear	1

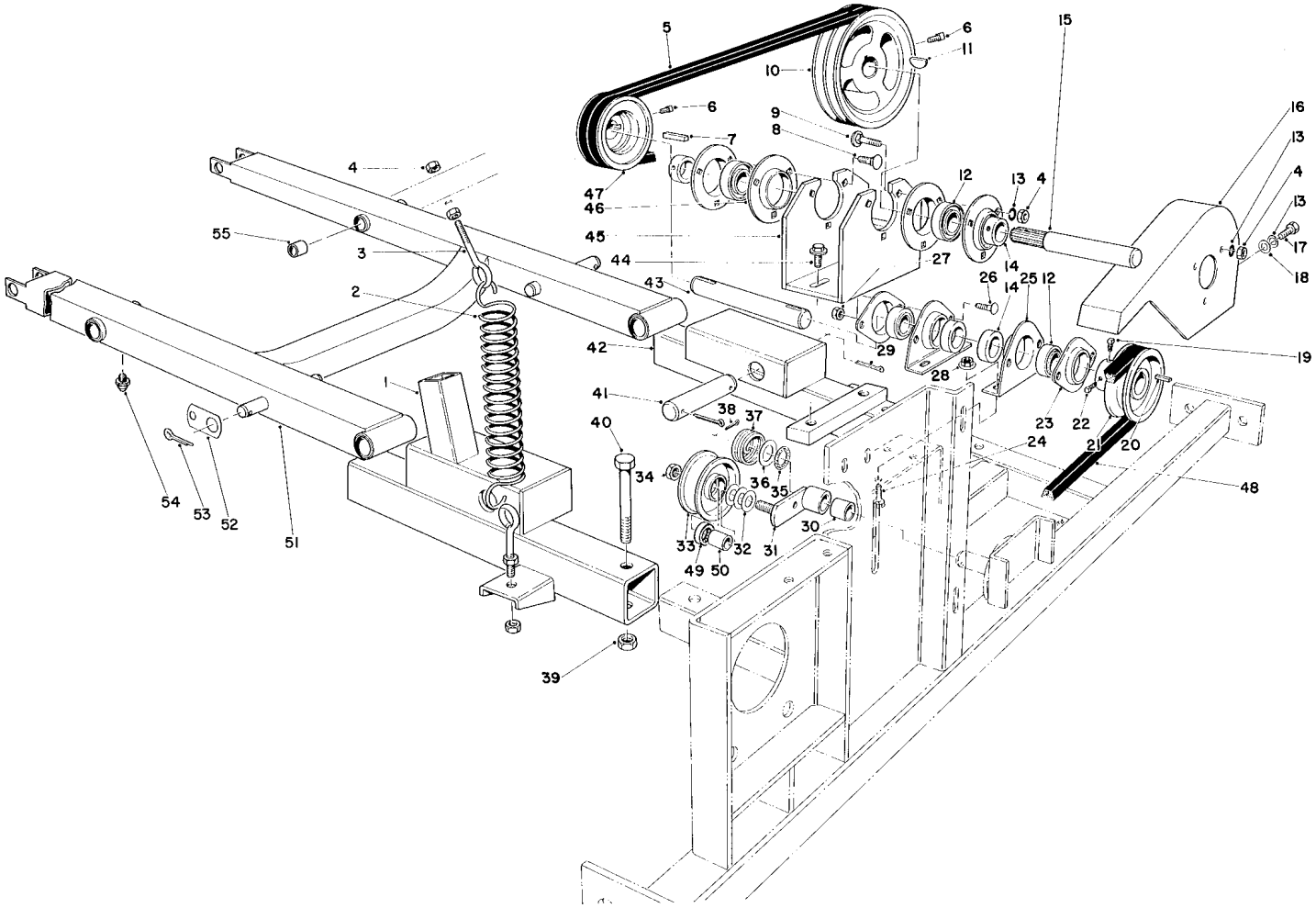

48" SNOWTHROWER ADAPTER KIT MODEL NO. 30572

Ref. No.	Part No.	Description	No. Used
1	37-5600	Adapter R.H.	1
2	30-1020	Spring – Extension	2
3	30-0980	Eye Bolt	4
4	3217-6	Hex Nut	17
5	37-5650	V-Belt (Matched Set)	1
6	3242-6	Square Head Setscrew	4
7	3-3267	Square Key	1
8	3230-16	Carriage Bolt	3
9	3230-4	Carriage Bolt	3
10	37-5340	Pulley	1
11	3257-8	Key – Woodruff	1
12	251-253	Bearing (Incl. Ref. #14)	4
13	3253-24	Lockwasher	11
14	251-77	Collar	4
15	39-4370	Jackshaft	1
16	37-5580	Belt Shield	1
17	322-3	Capscrew	2
18	3256-23	Washer	2
19	3242-1	Square Head Setscrew	1
20	5-7280	Key – Square	1
21	32-1790	Sheave	1
22	3242-2	Square Head Setscrew	1
23	251-285	Flange	2
24	323-4	Capscrew	4
25	251-286	Flange	2
26	3230-1	Carriage Bolt	4
27	32128-20	Nut – Flange	4
28	3290-357	Nut – Flange	4
29	3272-52	Cotter Pin	4
30	31-0680	Bushing Bronze	1

Ref. No.	Part No.	Description	No. Used
31	37-5470	Idler Arm (Incl. Ref. #30)	1
32	3256-27	Washer	3
33	32-1450	Idler Pulley	1
34	30-8670	Locknut	1
35	31-7620	Felt Washer	1
36	31-0210	Washer	1
37	31-9500	Spring – Torsion	1
38	3272-23	Pin – Cotter	1
39	32152-2	Locknut	2
40	323-11	Capscrew	2
41	37-5160	Pin	2
42	37-5620	Adapter L.H.	1
43	37-5250	Jackshaft	1
44	3234-12	Flangescrew	2
45	37-5610	Jackshaft – Support	1
46	251-287	Flange	4
47	37-5070	Pulley	1
48	37-5660	V-Belt	1
49	31-0530	Ball Bearing	1
50	30-5440	Sleeve	1
51†	27-4270	Lift Arm (Incl. Ref. #53 & 54)	1
52†	27-5270	Strap Brake Spring	2
53†	3272-12	Cotter Pin	2
54	302-53	Grease Fitting	2
55	256-101	Bushing	8
*	32-2820	Idler Assembly (Incl. Ref. #33 & 49-50)	1
*	37-5790	Reflector	2
*	32104-42	Self-Tapping Screw	4

*Not Illustrated

†Parts must be ordered for mounting 48" Snowthrower on Model No. 30790 order parts separately.

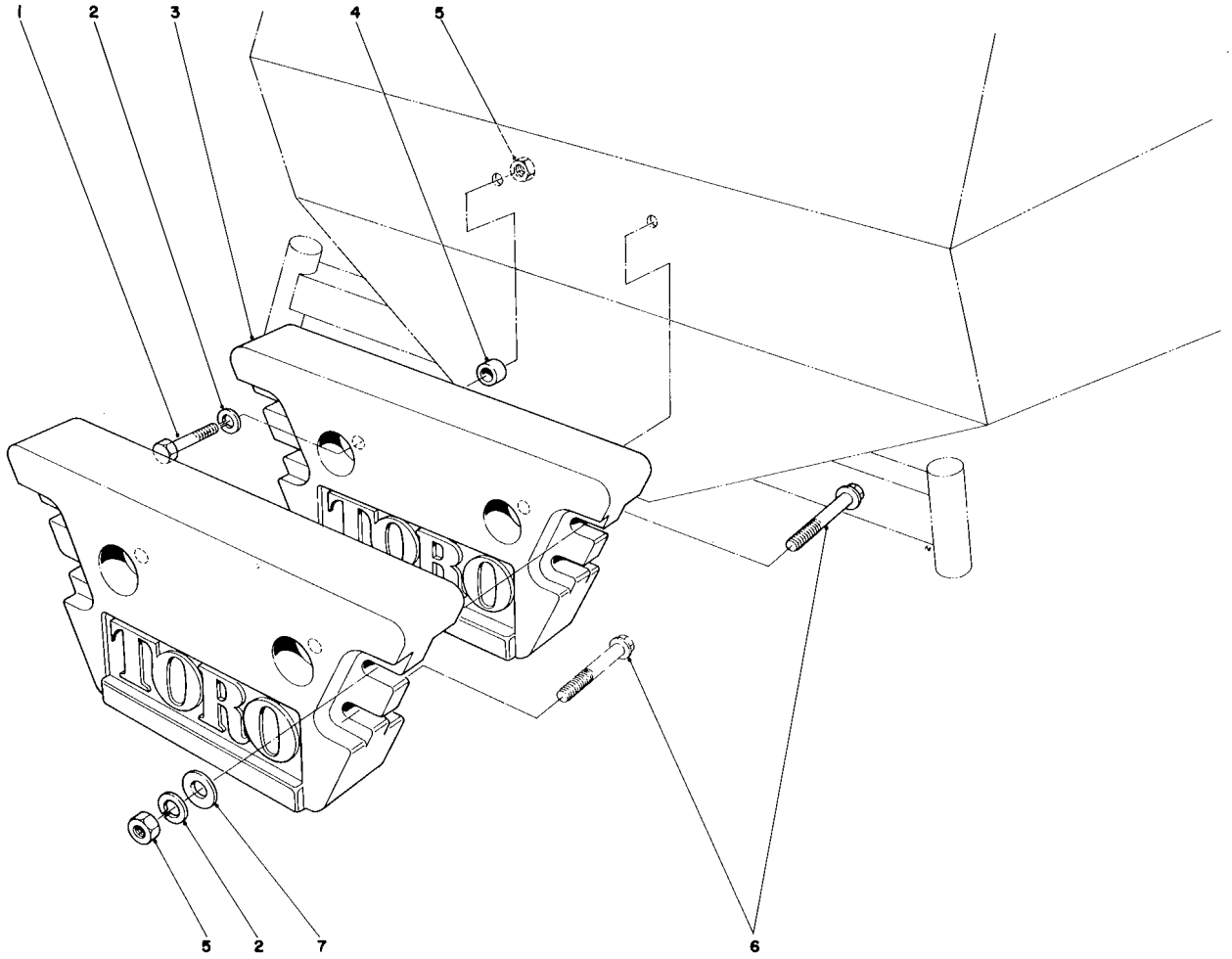

REAR WEIGHT KIT MODEL NO. 24-5780 (Optional)

Ref. No.	Part No.	Description	No. Used
1	325-6	Capscrew	2
2	3253-7	Lockwasher	6
3	24-5790	Rear Weight	2
4	3-8847	Spacer	2

Ref. No.	Part No.	Description	No. Used
5	3217-9	Nut	6
6	325-14	Capscrew	4
7	3256-26	Flatwasher	8

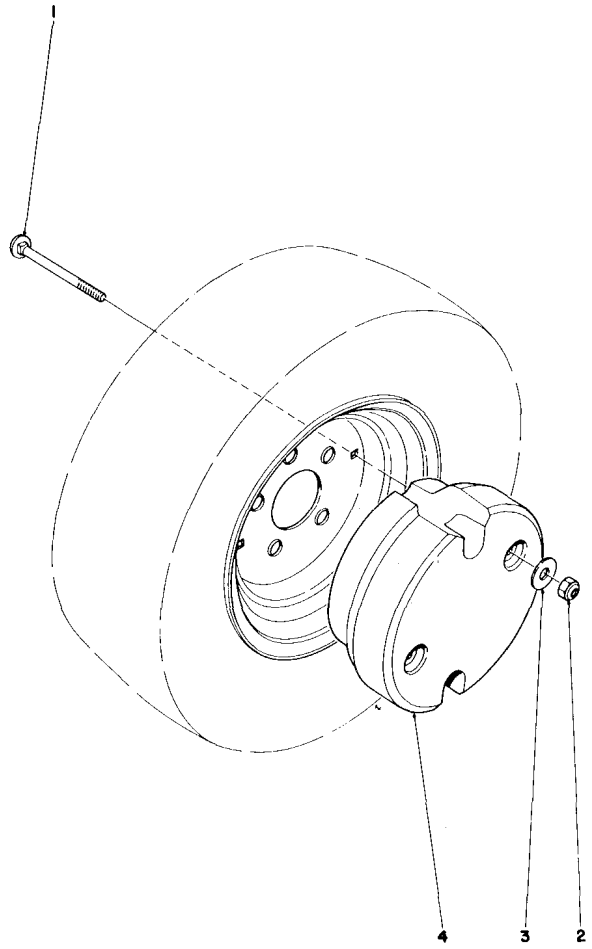

WHEEL WEIGHT KIT NO. 30762 (Optional)

Ref. No.	Part No.	Description	No. Used
1	3231-24	Carriage Bolt	4
2	3296-26	Nut	4

Ref. No.	Part No.	Description	No. Used
3	3256-24	Washer	4
4†		Wheel Weight	2

†Order Replacement Kit Model No. 30762

ENGINE, ONAN MODEL NO. B48G - GA020 TYPE NO. 4139F
CYLINDER BLOCK AND OIL SYSTEM

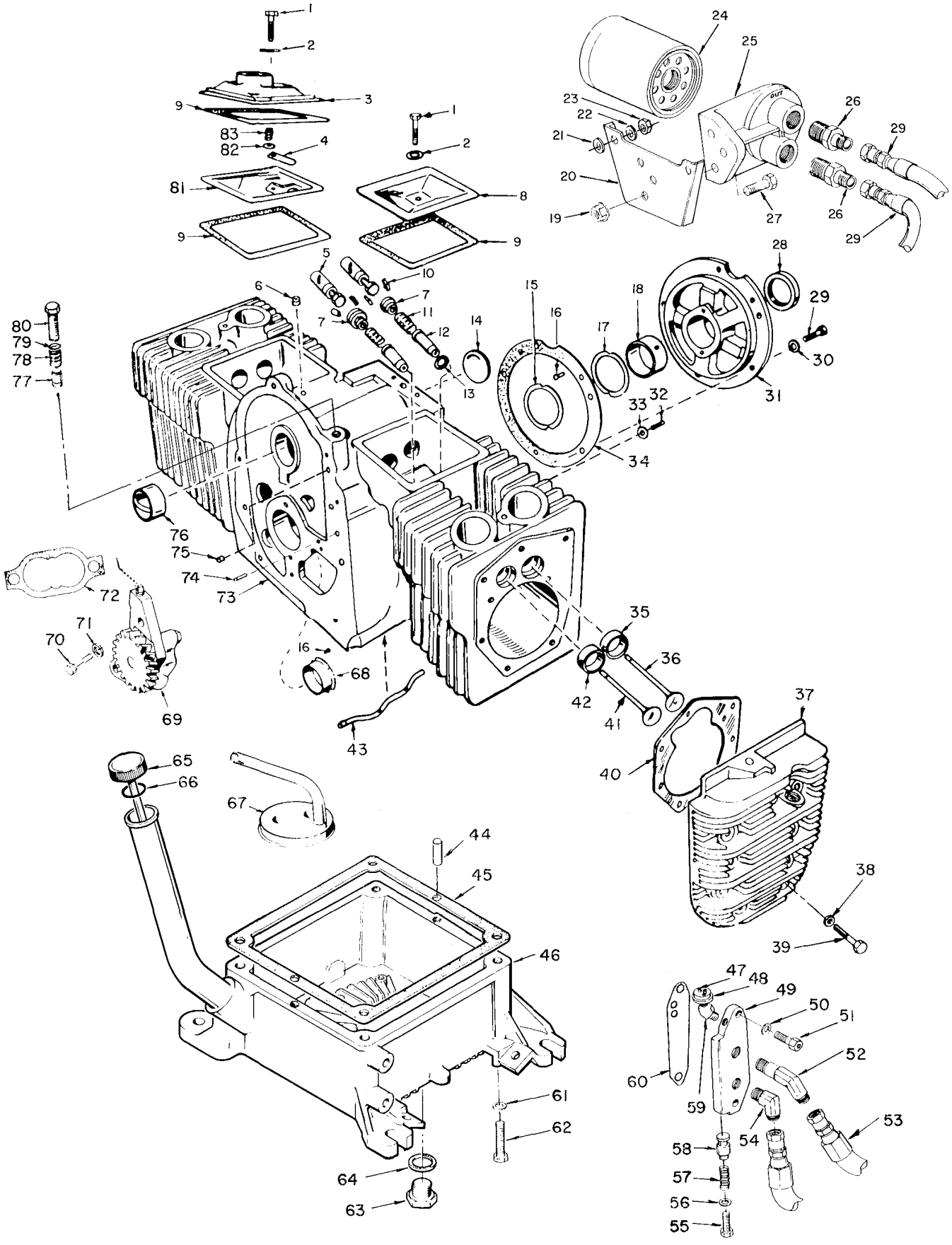

ENGINE, ONAN MODEL NO. B48G - GA020 TYPE NO. 4139F
CYLINDER BLOCK AND OIL SYSTEM

Ref. No.	Part No.	Description	No. Used
1	800-0010	Screw – Cap Hex Hd.	2
2	526-0063	Washer, Flat – Copper	2
3	110-2274	Cover – Valve	1
4	123-1175	Reed – Breather Valve	1
5	115-0006	Tappet, Valve (Standard)	4
*	115-0006-02	Tappet, Valve (.002 Oversize)	4
*	115-0006-05	Tappet, Valve (.005 Oversize)	4
6	517-0120	Plug, Breather Hole	1
7	110-0904	Roto Cap – Valve	4
8	110-1879	Cover, Valve	1
9	110-1921	Gasket, Valve Cover	3
10	110-0639	Lock, Valve Spring	8
11	110-0539	Spring Valve	4
12	110-1807	Guide, Valve	4
13	110-0068	Gasket, Intake Valve Guide	2
14	517-0048	Plug, Welch – Camshaft Opening	1
15	104-0575	Washer, Thrust	1
16	516-0072	Pin, Drive – Bearing Stop	4
17	104-0776	Shim, Crankshaft End Play (.005)	A/R
18	101-0450	Bearing, Crankshaft Rear Standard (Incl. Ref. #15)	1
*	101-0450-02	Bearing, Crankshaft Rear .002 Undersize (Incl. Ref. #15)	1
*	101-0450-10	Bearing, Crankshaft Rear .010 Undersize (Incl. Ref. #15)	1
*	101-0450-20	Bearing, Crankshaft Rear .020 Undersize (Incl. Ref. #15)	1
*	101-0450-30	Bearing, Crankshaft Rear .030 Undersize (Incl. Ref. #15)	1
19	870-0257	Nut, Self-Lock	3
20	122-0559	Bracket, Remote Oil Filter	1
21	526-0174	Washer, Over Bracket	2
22	526-0030	Washer, Under Bracket	2
23	862-0003	Nut, Hex	2
24	122-0469	Filter Oil	1
25	122-0476	Base, Remote Oil Filter	1
26	502-0804	Connector, Male	2
27	800-0027	Screw, Cap Hex Head	3
28	509-0041	Seal, Oil – Crankshaft Rear	1
29	800-0051	Screw, Cap – Hex Hd.	5
30	850-0050	Washer, Lock – Spring	5
31	101-0439	Plate, Bearing – Rear	1
32	520-0820	Stud	2
33	526-0066	Washer, Flat Copper	2
34	101-0415	Gasket, Bearing Plate	1
35	110-0197	Insert, Valve Seat – Intake (Standard)	2
*	110-0197-02	Insert, Valve Seat – Intake (.002 Oversize)	2
*	110-0197-05	Insert, Valve Seat – Intake (.005 Oversize)	2
*	110-0197-10	Insert, Valve Seat – Intake (.010 Oversize)	2
*	110-0197-25	Insert, Valve Seat – Intake (.025 Oversize)	2
36	110-2368	Valve, Intake	2
37	110-3214	Head, Cylinder – Right Side	1
*	110-3213	Head, Cylinder – Left Side	1
38	526-0122	Washer, Flat	18
39	800-0540	Screw, Cap – Hex Head (Special) (5/16-18 x 1-5/8")	8
*	800-0541	Screw, Cap – Hex Head (Special) 5/16-18 x 2")	10
40	110-3181	Gasket, Cylinder Head	2

Ref. No.	Part No.	Description	No. Used
41	110-1955	Valve, Exhaust	2
42	110-1824	Insert, Valve Seat – Exhaust (Std.)	2
*	110-1824-02	Insert, Valve Seat – Exhaust (.002 Oversize)	
*	110-1824-05	Insert, Valve Seat – Exhaust (.005 Oversize)	2
*	110-1824-10	Insert, Valve Seat – Exhaust (.010 Oversize)	2
*	110-1824-25	Insert, Valve Seat – Exhaust (.025 Oversize)	2
43	120-0735	Tube, Oil – Cylinder Block	1
44	516-0212	Pin Dowel – Oil Base	2
45	102-1200	Gasket, Oil Base	1
46	102-1216	Base, Oil	1
47	336-8117	Lead, Low Oil Pressure Cut Off	1
48	309-0105	Switch, Low Oil Pressure Cut Off	1
49	122-0369	Adapter, Oil Filter	1
50	526-0065	Washer, Flat Copper	2
51	802-0057	Screw, Cap – Socket Head	2
52	502-0806	Elbow, Male (To Filter)	1
53	501-0440	Hose, Oil	2
54	502-0805	Elbow, Male (From Filter)	1
55	801-0046	Screw, Cap Hex Hd.	1
56	526-0066	Washer, Flat	1
57	120-0140	Spring, By-Pass	1
58	120-0398	Valve, By-Pass Plunger	1
59	502-0053	Elbow, Street 45°	1
60	122-0375	Gasket, Oil Filter Adapter	1
61	850-0050	Washer, Lock-Spring	4
62	800-0061	Screw, Cap – Hex Head	4
63	102-0938	Plug, Oil Drain	1
64	102-0743	Gasket, Oil Drain	1
65	123-1402	Cap and Indicator, Oil Fill	1
66	509-0142	O-Ring, Oil Fill Cap	1
67	120-0713	Cup, Intake – Oil Pump	1
68	101-0432	Bearing, Crankshaft – Front (Flanged) Standard	1
*	101-0432-02	Bearing, Crankshaft – Front (Flanged .002 Undersize	1
*	101-0432-10	Bearing, Crankshaft – Front (Flanged) .010 Undersize	1
*	101-0432-20	Bearing, Crankshaft – Front (Flanged) .020 Undersize	1
*	101-0432-30	Bearing, Crankshaft – Front (Flanged) .003 Undersize	1
69	120-0491	Pump, Oil	1
70	800-0007	Screw, Cap – Hex Hd.	2
71	850-0040	Washer, Lock Spring	2
72	120-0161	Gasket Kit, Oil Pump	1
73	110-3029	Block Assy. (Incl. Ref. #6, 12-18, 29-31, 34-35, 42-43, 68, 74 & 76)	1
74	516-0141	Pin, Gear Cover Alignment	2
75	517-0067	Plug, Core Hole	1
76	101-0405	Bearing, Camshaft	2
77	120-0398	Plunger, Bypass Valve	1
78	120-0140	Spring, Bypass Valve	1
79	526-0066	Washer, Flat – Copper	1
80	801-0049	Screw, Cap – Hex Head	1
81	123-1173	Baffle, Breather Valve	1
82	526-0018	Washer, Flat	1
83	123-1174	Spring, Breather Valve	1

*Not Illustrated

ENGINE, ONAN MODEL NO. B48G - GA020 TYPE NO. 4139F

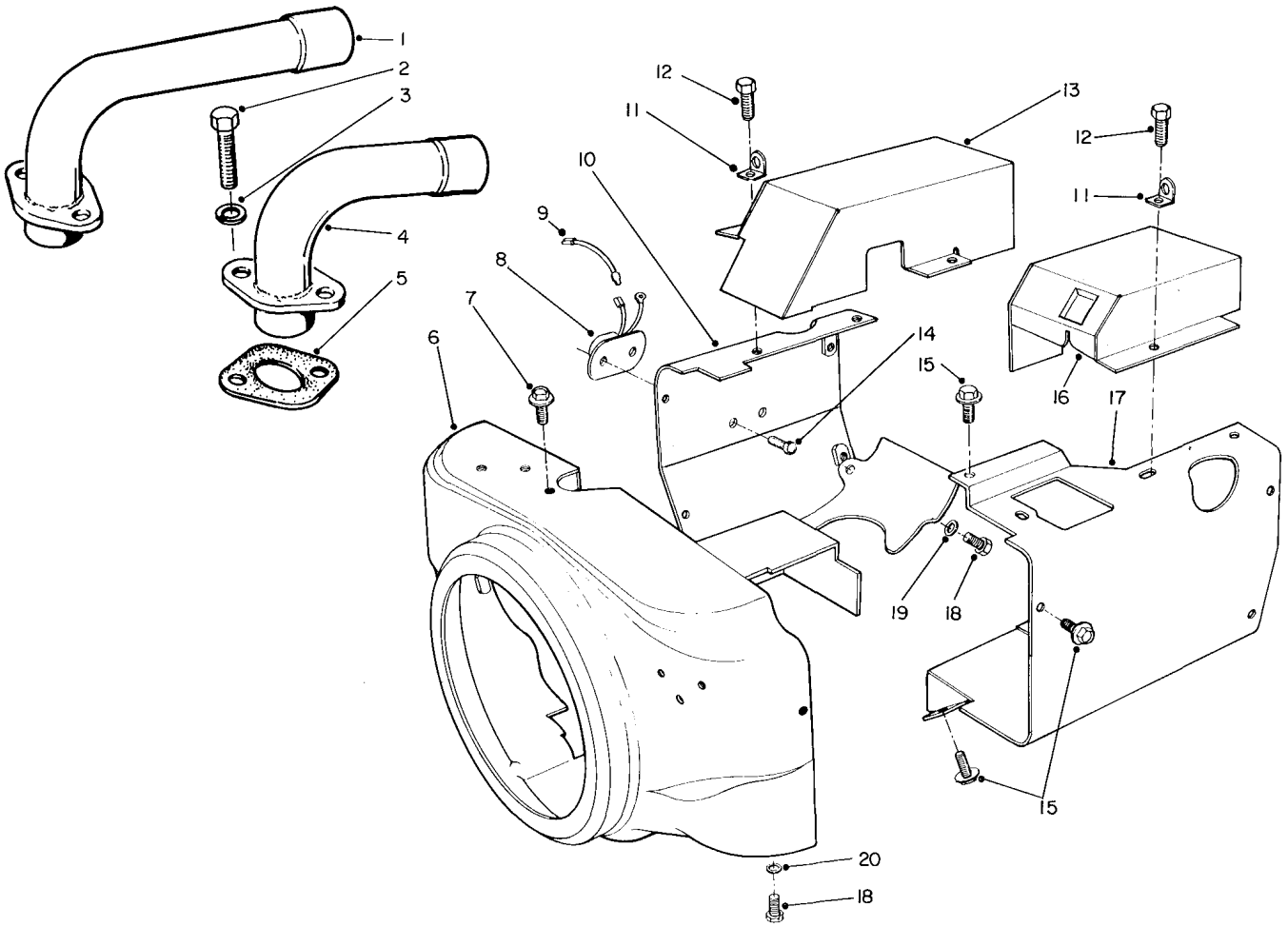

ENGINE AIR HOUSING

Ref. No.	Part No.	Description	No. Used
1	154-2129	Adapter, Exhaust – Left	1
2	800-0026	Screw, Cap – Hex Hd.	4
3	850-0045	Washer, Lock – Spring	4
4	154-2128	Adapter, Exhaust – Right	1
5	154-1725	Gasket, Exhaust	2
6	134-4285	Housing, Blower	1
7	815-0261	Screw, Cap – Hex. Hd.	1
8	309-0497	Switch, High Air Temp. Cut Off	1
9	3369501	Lead	1
10	134-4265	Housing, Cylinder Air – Left Side	1

Ref. No.	Part No.	Description	No. Used
11	403-1523	Bracket, Lifting	2
12	815-0508	Screw, Tapping – Hex Hd.	2
13	134-4028	Cover, Exhaust – Left	1
14	818-0076	Rivet, High Air Temp. Cut Off	2
15	821-0008	Screw, Cup Hex Washer Hd.	5
16	134-4341	Cover, Exhaust – Right	1
17	134-4280	Housing, Cylinder Air – Right Side	1
18	815-0290	Screw, Cap – Hex Hd.	4
19	526-0021	Washer, Flat	2
20	526-0018	Washer, Flat	2

ENGINE, ONAN MODEL NO. B48G - GA020 TYPE NO. 4139F

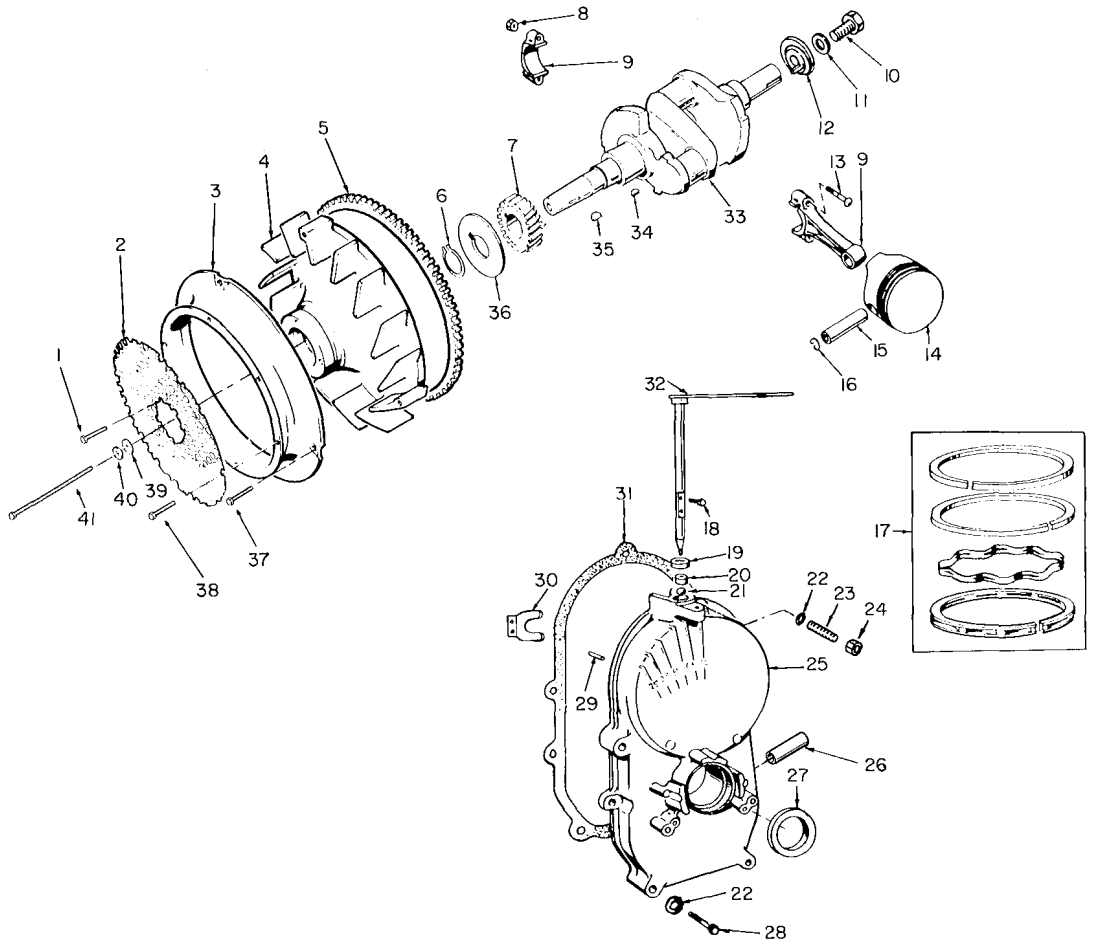

CRANKSHAFT AND FLYWHEEL

Ref. No.	Part No.	Description	No. Used
1	821-0014	Screw, Cap – Hex Head Locking	4
2	134-4120	Guard, Flywheel	1
3	134-3847	Venture, Blower Wheel	1
4	134-3912	Flywheel (Incl. Ref. #5)	1
5	104-0779	Gear, Ring	1
6	518-0014	Ring, Retaining	1
7	104-0032	Gear, Crankshaft	1
8	870-0302	Nut, Hex – Crown Lock	4
9	114-0257	Rod, Connecting – Standard (Incl. Ref. #8 & 13)	2
*	114-0257-10	Rod, Connecting (.010 Undersize) (Incl. Ref. #8 &13)	2
*	114-0257-20	Rod, Connecting (.020 Undersize) (Incl. Ref. #8 &13)	2
*	114-0257-30	Rod, Connecting (.030 Undersize) (Incl. Ref. #8 &13)	2
10	801-0050	Screw, Cap Hex Hd.	1
11	850-0050	Washer, Lock-Spring	1
12	104-1156	Weight, Balance	1
13	114-0240	Bolt, Special – Connecting Rod	4

Ref. No.	Part No.	Description	No. Used
14	112-0186	Piston & Pin – Standard (Incl. Ref. #15 & 16)	2
*	112-0186-05	Piston & Pin (.005 Oversize) (Incl. Ref. #15 & 16)	2
*	112-0186-10	Piston & Pin (.010 Oversize) (Incl. Ref. #15 & 16)	2
*	112-0186-20	Piston & Pin (.020 Oversize) (Incl. Ref. #15 & 16)	2
*	112-0186-30	Piston & Pin (.030 Oversize) (Incl. Ref. #15 & 16)	2
*	112-0186-40	Piston & Pin (.040 Oversize) (Incl. Ref. #15 & 16)	2
15	112-0122	Pin, Piston	2
16	518-0311	Ring, Retaining	4
17	113-0189	Ring Set, Piston – Standard	2
*	113-0189-05	Ring Set, Piston (.005 Oversize)	2
*	113-0189-10	Ring Set, Piston (.010 Oversize)	2
*	113-0189-20	Ring Set, Piston (.020 Oversize)	2
*	113-0189-30	Ring Set, Piston (.030 Oversize)	2
*	113-0189-40	Ring Set, Piston (.040 Oversize)	2
18	815-0046	Screw, Machine – Pan Hd.	2
19	510-0014	Ball, Bearing – Governor Shaft	1

*Not Illustrated

ENGINE, ONAN MODEL NO. B48G - GA020 TYPE NO. 4139F

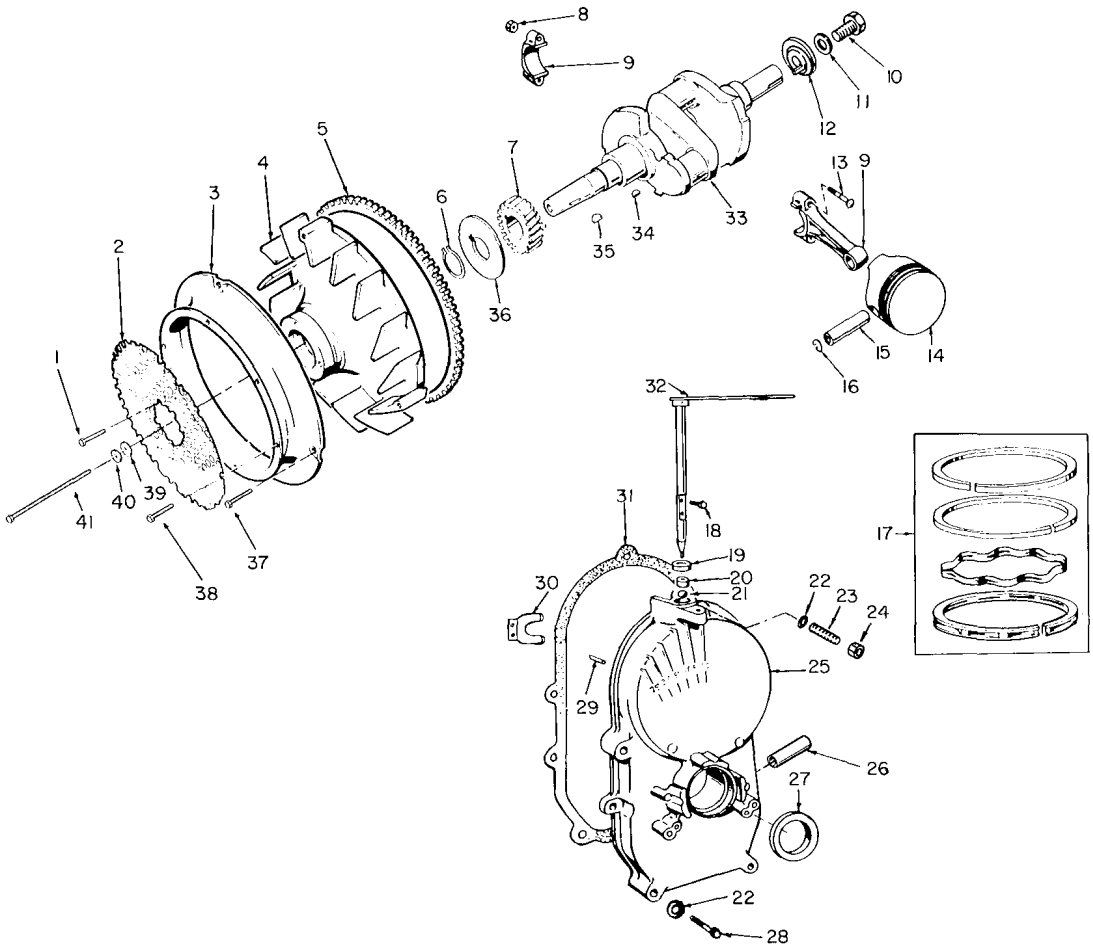

CRANKSHAFT AND FLYWHEEL (Continued)

Ref. No.	Part No.	Description	No. Used
20	510-0105	Bearing, Governor Shaft	1
21	509-0008	Seal, Oil – Governor Shaft	1
22	526-0065	Washer, Flat – Copper	5
23	520-0933	Stud, Gear Cover – Top Hole	1
24	826-0015	Nut, Gear Cover Top Hole	1
25	103-0669	Gear Case Assembly (Incl. Ref. #18-21, 23-24, 27-28 & 30)	1
26	149-1299	Tube, Vacuum Port	1
27	509-0040	Seal, Oil – Crankshaft	1
28	800-0032	Screw, Cap Hex Hd.	4
29	516-0130	Pin, Dowel – Governor Cup Stop	1

Ref. No.	Part No.	Description	No. Used
30	150-1187	Yoke, Governor Shaft	1
31	103-0408	Gasket, Gearcase Mounting	1
32	150-1470	Shaft and Arm, Governor	1
33	104-1419	Crankshaft	1
34	515-0001	Key, Crankshaft Gear	1
35	515-0227	Key, Flywheel	1
36	104-0043	Washer, Gear Retaining	1
37	821-0010	Screw, Cap Hex Washer Hd.	5
38	815-0518	Screw, Tapping Hex Washer Hd.	6
39	526-0017	Washer, Flat	1
40	850-0055	Washer, Lock – Spring	1
41	104-0170	Screw, Cap – Hex Head	1

ENGINE, ONAN MODEL NO. B48G - GA020 TYPE NO. 4139F

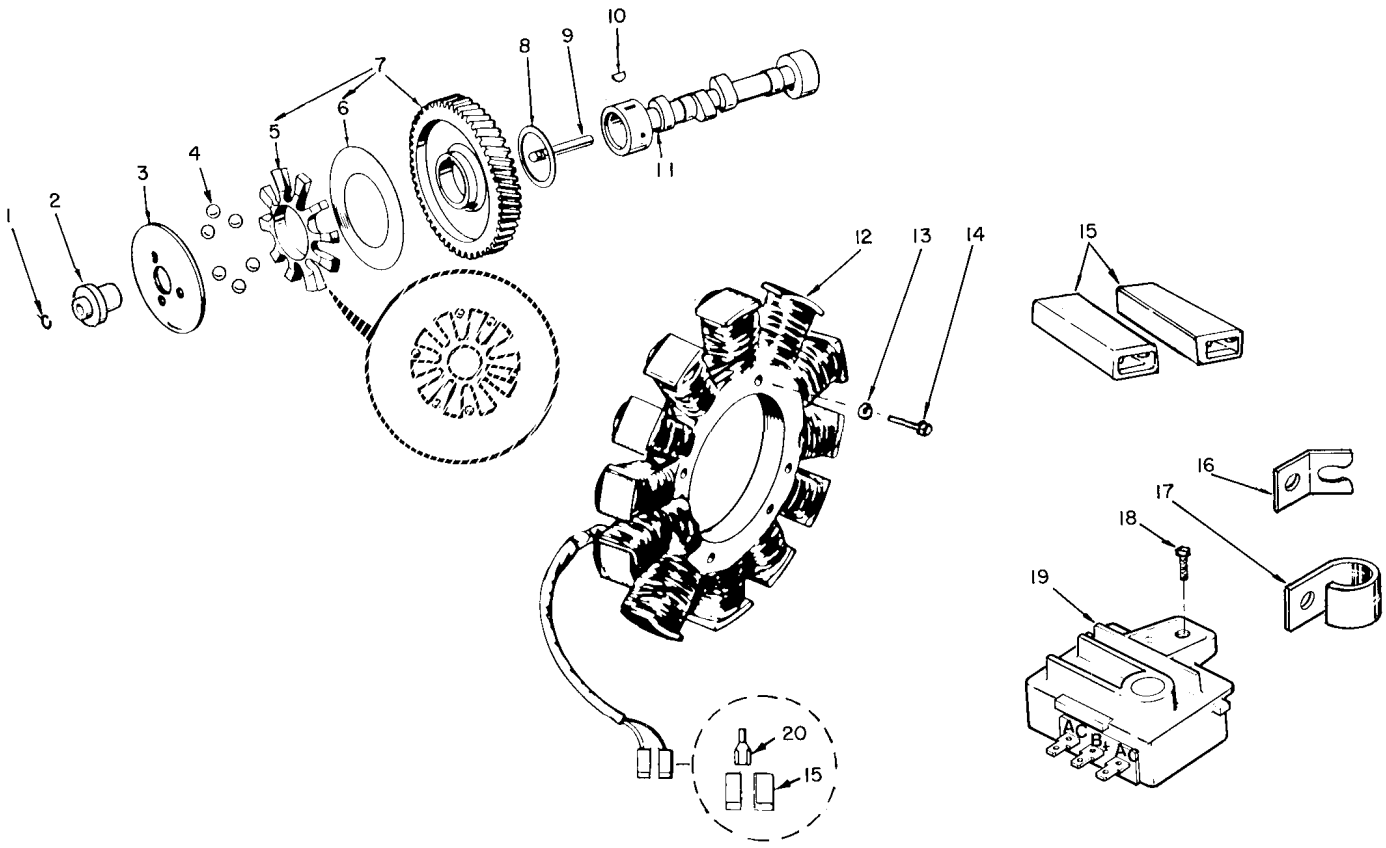

CAMSHAFT AND FLYWHEEL ALTERNATOR

Ref. No.	Part No.	Description	No. Used
1	150-0078	Ring, Retaining	1
2	150-1519	Hub, Governor Cup	1
3	150-1520	Cup, Governor	1
4	510-0015	Ball, Governor	6
5	150-1257	Spacer, Flyball	1
6	150-0077	Plate, Flyball	1
7	105-0332	Gear, Camshaft (Incl. Ref. #5 & 6)	1
8	105-0541	Washer, Thrust	1
9	150-0075	Pin, Center	1
10	515-0001	Key, Woodruff—Camshaft Gear	1

Ref. No.	Part No.	Description	No. Used
11	105-0402	Camshaft (Incl. Ref. #9)	1
12	191-1256	Stator (Incl. Ref. #15 & 20)	1
13	850-0030	Washer — Lock, Spring	3
14	813-0148	Screw — Machine, Round Hd.	3
15	323-1216	Body, Terminal Connector (AC Terminals)	2
16	167-0188	Bracket, Alternator Lead	1
17	332-2319	Clamp, Wire — Alternator Leads	1
18	821-0007	Screw — Cap Hex Washer Hd.	1
19	191-1206	Regulator Voltage	1
20	332-2423	Terminal, Stator Leads	2

ENGINE, ONAN MODEL NO. B48G - GA020 TYPE NO. 4139F

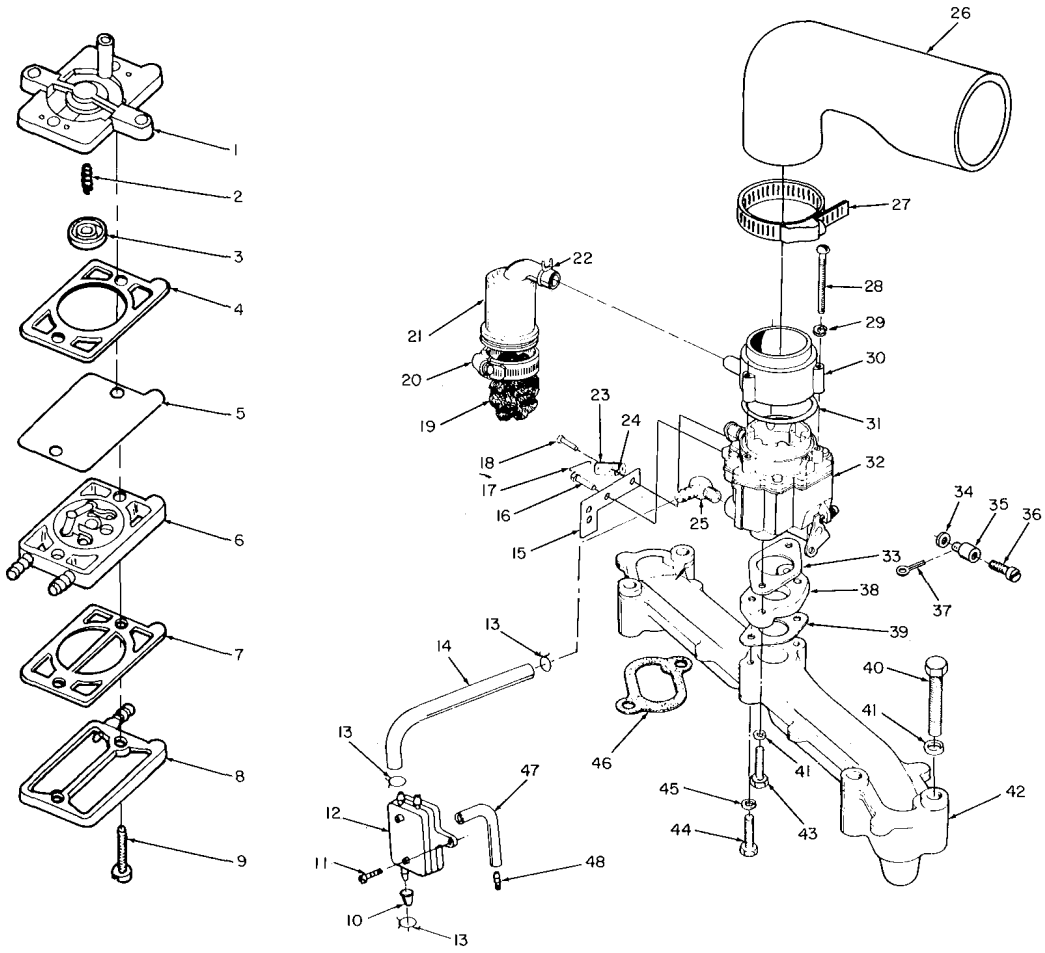

FUEL SYSTEM

Ref. No.	Part No.	Description	No. Used
1	149-1324	Base, Pump	1
2	142-0545	Spring, Fuel Pump	1
3	142-0552	Plate, Drive – Fuel Pump	1
4	142-0541	Gasket – Pump Cover	1
5	142-0555	Diaphragm – Fuel Pump	1
6	142-0537	Valve Assembly, Reed – Fuel Pump (Includes Cap & Clamp)	1
7	149-1323	Gasket – Cover to Valve Assy.	1
8	149-1326	Cover – Pump	1
9	142-0540	Screw – Pump Cover to Body	2
10	149-1321	Cap, Fuel Outlet	1
11	815-0555	Screw, Tapping Pan Hd.	2
12	149-1322	Pump, Fuel – Vacuum Pluse (Incl. Ref. #1-9)	1
13	503-0301	Clamp, Hose	3
14	503-0874	Hose, Fuel (13")	1
15	153-0524	Bracket, Cable Choke	1
16	821-0002	Screw, Cap Hex Washer Hd.	1
17	153-0500	Link, Choke	1
18	815-0480	Screw, Shoulder	1
19	123-1428	Filter, Breather Tube	1
20	503-01071	Clamp, Breather Tube	1
21	123-1539	Tube, Crankcase Breather	1
22	503-0171	Clamp, Hose	1
23	153-0523	Swivel, Choke	1
24	854-0010	Washer, Lock Internal Tooth	1

Ref. No.	Part No.	Description	No. Used
25	502-0313	Elbow – Hose	1
26	140-1428	Elbow, Air Inlet	1
27	503-0274	Clamp, Hose	1
28	813-0106	Screw – Machine Round Hd.	3
29	850-0030	Washer – Lock	3
30	140-1714	Adapter, Air Cleaner	1
31	509-0145	Seal, O-Ring	1
32	146-0386	Carburetor, Complete (Incl. Ref. #33)	1
33	154-0733	Gasket, Carburetor to Adapter	1
34	526-0140	Washer	1
35	152-0155	Swivel	1
36	815-0104	Screw	1
37	516-0059	Cotter Pin	1
38	154-1977	Adapter, Carburetor	1
39	145-0438	Gasket, Adapter to Manifold	1
40	800-0033	Screw, Cap – Hex Head	4
41	850-0045	Washer, Lock-Spring	6
42	154-2206	Manifold, Intake	1
43	800-0027	Screw, Cap – Hex Hd.	2
44	800-0023	Screw, Cap – Hex Hd.	2
45	850-0040	Washer, Lock – Spring	2
46	154-1744	Gasket, Manifold to Block	2
47	503-0663	Hose, Fuel Pump Vacuum	1
48†	149-1299	Tube, Vacuum Port	1

†Part included in 103-0669 Gear Case Assembly

ENGINE, ONAN MODEL NO. B48G - GA020 TYPE NO. 4139F

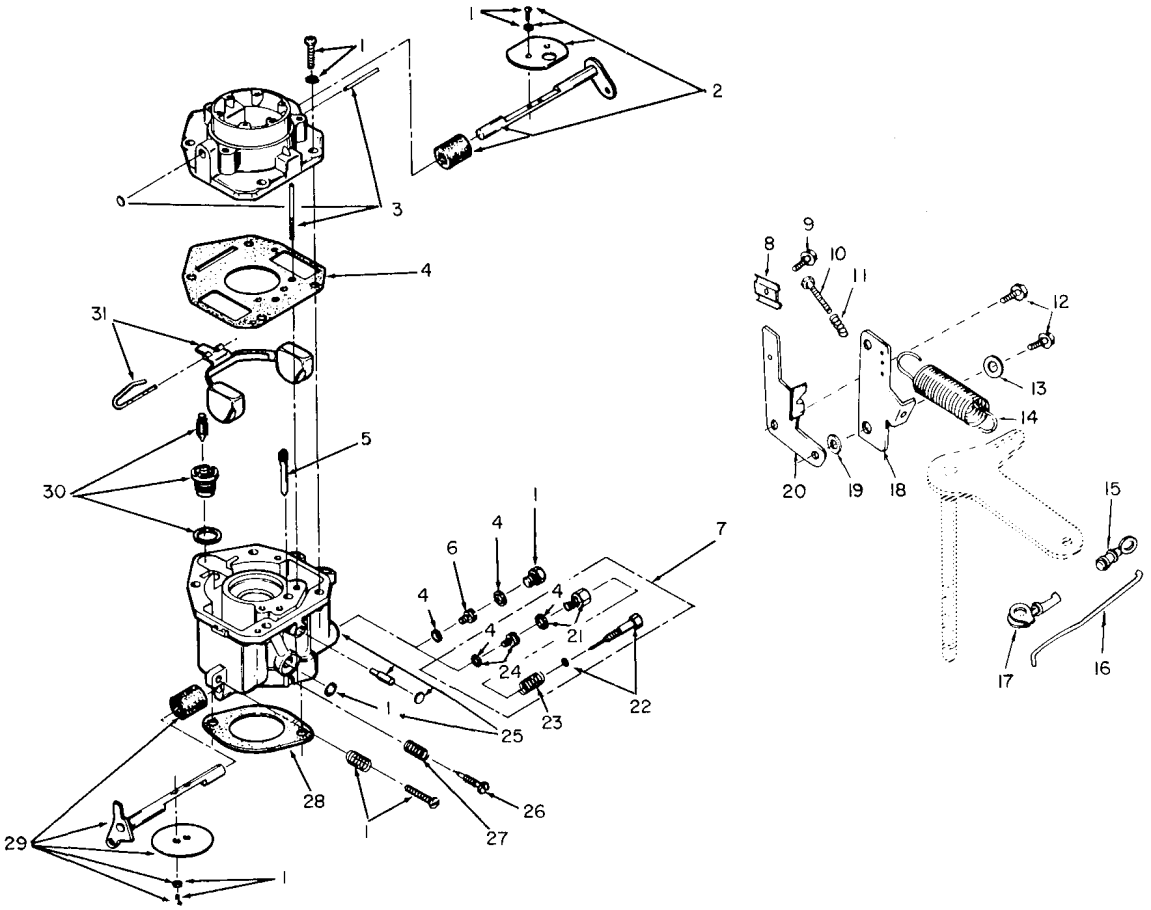

CARBURETOR AND GOVERNOR CONTROL—VARIABLE SPEED (Side Pull)

Ref. No.	Part No.	Description	No. Used
1	146-0322	Screw and Plug Kit	1
2	146-0323	Choke, Shaft Kit	1
3†		Intake, Air	1
4	146-0326	Gasket Kit	1
5	146-0337	Jet, Idle	1
6	146-0391	Jet, Power	1
7	146-0349	Variable Speed Jet Kit — Optional (High Altitude Application)	1
8	153-0514	Clamp, Cable	1
9	815-0391	Screw, Tapping Hex. Hd.	1
10	815-0510	Screw, Tapping Hex. Hd.	1
11	150-1398	Spring Idle Setting	1
12	815-0436	Screw — Cap Hex Washer Hd.	2
13	526-0214	Washer, Flat	1
14	150-1214	Spring, Governor	1
15	518-0004	Clip, Retaining — Control Rod	1
16	150-1924	Rod, Governor Control	1

Ref. No.	Part No.	Description	No. Used
17	518-0406	Clip, Retaining — Control Rod	1
18	150-1576	Arm-Governor Control	1
19	150-1269	Bushing Control Arm	1
20	150-1725	Bracket Cable	1
21	146-0340	Retainer, Power Needle (Incl. Gasket)	1
22	146-0342	Needle Complete Power	1
23	146-0341	Spring, Power Needle	1
24	146-0343	PowerJet, Variable (Incl. Gasket)	1
25†		Body	1
26	146-0335	Needle, Idle Adjusting	1
27	146-0331	Spring, Idle Adjusting Needle	1
28	154-0733	Gasket, Carburetor Mounting	1
29	146-0393	Throttle Shaft Kit	1
30	146-0329	Valve & Seat Kit	1
31	146-0325	Float Kit	1
*	146-0386	Carburetor, Complete (Incl. Mounting Gasket)	1

*Not Illustrated
†Not Sold Separately

ENGINE, ONAN MODEL NO. B48G - GA020 TYPE NO. 4139F

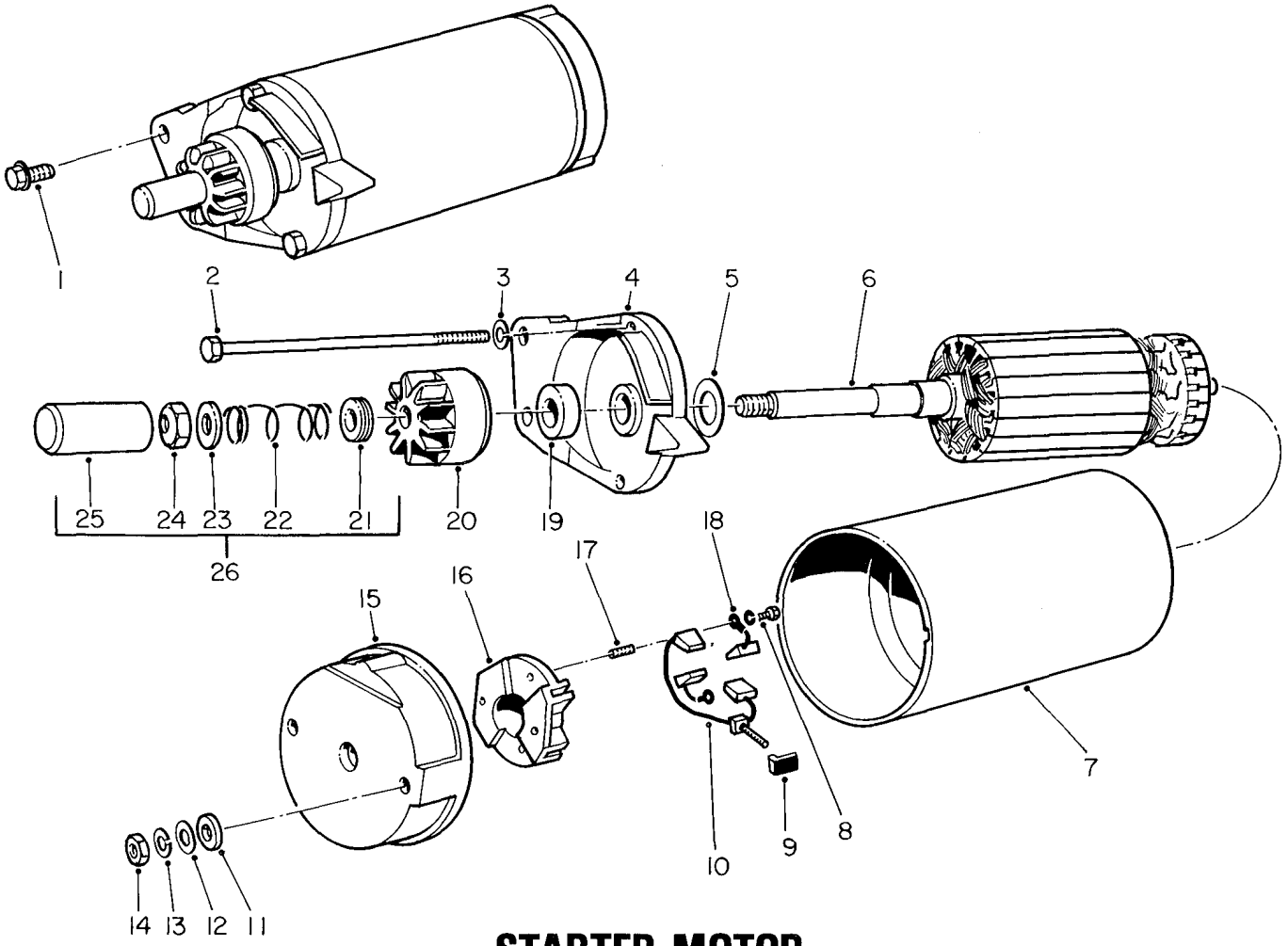

STARTER MOTOR

Ref. No.	Part No.	Description	No. Used
1	850-0570	Screw – Cap, Hex Hd.	1
2	191-1048	Screw – Hex Hd.	2
3	850-0040	Washer, Lock	2
4	191-1597	Cap Assembly, Drive End	1
5	191-1038	Washer, Armature Thrust	1
6	191-1039	Armature	1
7†		Housing, Starter Motor	1
8†		Screw and Lockwasher	2
9†		Bushing Insulation – Input Stud	1
10†		Stud and Brush Assembly Input	1
11†		Nut, Securing – Input Stud	1
12†		Washer, Lock – Input Stud	1
13†		Washer, Flat – Input Stud	1
14†		Washer, Insulation – Input Stud	1
15	191-1532	Cap Assembly, Commatator (Incl. Ref. #9-14&16-18&20)	1

Ref. No.	Part No.	Description	No. Used
16†		Brush Holder	1
17†		Spring, Brush	4
18†		Brush, Ground	2
19	191-1534	Cap, Dust	1
20	191-1156	Drive Assembly	1
21†		Spacer, Dust Cover	1
22†		Spring, Anti-Drift	1
23†		Washer, Stop Nut	1
24†		Nut, Stop	1
25†		Cover, Dust	1
26	191-1359	Dust Cover Assembly (Incl. Ref. #21-25)	1
*	191-1533	Repair Kit, Brush, Spring and Stud (Incl. Ref. #10, 17 - 18)	1
*	191-1567	Motor Starter Complete	1

*Not Illustrated
†Not Sold Separately

ENGINE, ONAN MODEL NO. B48G - GA020 TYPE NO. 4139F

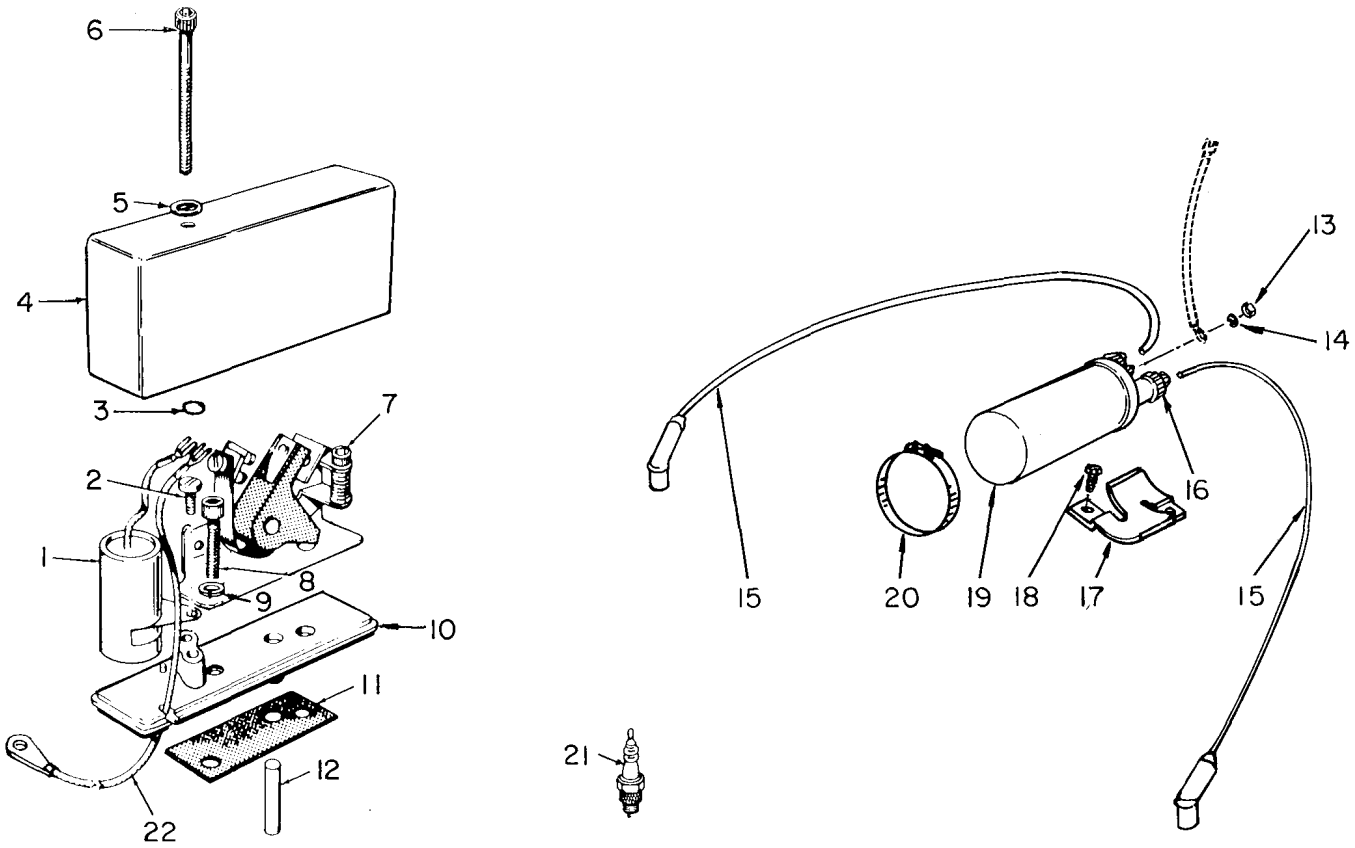

IGNITION SYSTEM

Ref. No.	Part No.	Description	No. Used
1	312-0244	Condenser	1
2	815-0358	Cap Screw Slotted	1
3	509-0065	Retainer ("O" Ring)	1
4	160-1285	Cover, Breaker Box	1
5	526-0008	Flat Washer	1
6	802-0022	Screw, Cap-Hex Socket	1
7	160-1183	Point Set Breaker	1
8	802-0034	Cap Screw Socket Hd.	2
9	850-0038	Lockwasher	2
10	160-1219	Base Breaker	1
11	160-1150	Gasket, Breaker Box	1
12	160-1151	Plunger, Breaker Points	1

Ref. No.	Part No.	Description	No. Used
13	166-0554	Nut – Hex, Special	1
14	850-2005	Washer, Lock – Spring	1
15	167-1595	Cable – Spark Plug 27" Right	1
*	167-1596	Cable – Spark Plug 9" Left	1
16	166-0604	Cap Coil Terminal	2
17	166-0721	Bracket Ignition Coil	1
18	821-0009	Screw, Cap Hex Washer Hd.	1
19	166-0535	Coil, Ignition	1
20	503-0311	Clamp, Ignition Coil	1
21	167-0263	Plug, Spark	2
22	336-8402	Lead – Breaker Box to Coil	1
*	160-1303	Breaker Box (Incl. Ref. #1-11)	1

*Not Illustrated

The Toro Promise

A ONE YEAR LIMITED WARRANTY ON COMMERCIAL PRODUCTS OTHER THAN WALK ROTARY MOWERS, TRIMMERS AND BLOWERS.

The Toro Company promises to repair your TORO Product if defective in materials or workmanship. The following time periods from the date of purchase apply:

Commercial Products	1 Year
Hevi-Duty Walk Rotary Mowers	1 Year

The costs of parts and labor are included, but the customer pays the transportation costs on walk rotary mowers, trimmers and blowers.

If you feel your TORO product is defective and wish to rely on The Toro Promise, the following procedure is recommended:

1. Contact your Authorized TORO Distributor or Commercial Dealer (the Yellow Pages of your telephone directory is a good reference source).
2. The TORO Distributor or Commercial Dealer will advise you on the arrangements that can be made to inspect and repair your product.
3. The TORO Distributor or Commercial Dealer will inspect the product and advise you whether the product is defective and, if so, make all repairs necessary to correct the defect without an extra charge to you.

If for any reason you are dissatisfied with the distributor's analysis of the defect or the service performed, you may contact us.

Write:

TORO Commercial Products Service Department
8111 Lyndale Avenue South
Minneapolis, Minnesota 55420

The above remedy of product defects through repair by an Authorized TORO Distributor or Commercial Dealer is the purchaser's sole remedy for any defect.

THERE IS NO OTHER EXPRESS WARRANTY. ALL IMPLIED WARRANTIES OF MERCHANTABILITY AND FITNESS FOR USE ARE LIMITED TO THE DURATION OF THE EXPRESS WARRANTY.

Some states do not allow limitations on how long an implied warranty lasts, so the above limitation may not apply to you.

This Warranty applies only to parts or components which are defective and does not cover repairs necessary due to normal wear, misuse, accidents, or lack of proper maintenance. Regular, routine maintenance of the unit to keep it in proper condition is the responsibility of the owner.

All warranty repairs reimbursable under the Toro Promise must be performed by an Authorized TORO Commercial Dealer or Distributor using Toro approved replacement parts.

Repairs or attempted repairs by anyone other than an Authorized TORO Distributor or Commercial Dealer are not reimbursable under the Toro Promise. In addition, these unauthorized repair attempts may result in additional malfunctions, the correction of which is not covered by warranty.

THE TORO COMPANY IS NOT LIABLE FOR INDIRECT, INCIDENTAL OR CONSEQUENTIAL DAMAGES IN CONNECTION WITH THE USE OF THE PRODUCT INCLUDING ANY COST OR EXPENSE OF PROVIDING SUBSTITUTE EQUIPMENT OR SERVICE DURING PERIODS OF MALFUNCTION OR NON-USE.

Some states do not allow the exclusion or limitation of incidental or consequential damages, so the above limitation or exclusion may not apply to you.

This warranty gives you specific legal rights, and you may also have other rights which vary from state to state.

COUNTRIES OTHER THAN THE UNITED STATES OR CANADA

Customers who have purchased TORO products exported from the United States or Canada should contact their TORO Distributor (Dealer) to obtain guarantee policies for your country, province or state. If for any reason you are dissatisfied with your Distributor's service or have difficulty obtaining guarantee information, contact the TORO importer. If all other remedies fail, you may contact us at The Toro Company.

Compliance with Radio Interference Regulations Certified.
Certifie Conforme au Reglement sur le Brouillage Radioelectrique.