Form No. 3464-392 Rev C

TORO®

Count on it.

Parts Catalog

Haven™ Robotic

5000m² Lawn Mower

Model No. 31062—Serial No. 324000000 and Up

Register at www.Toro.com.
Original Instructions (EN)

CE

3464-392 C

Ordering Replacement Parts

To order replacement parts, please supply the part number, the quantity, and the description of each part desired.

Understanding Reference Numbers

Each identified part in an illustration has a reference number. The reference number for a part also appears in the parts list, along with other information about the part.

This catalog uses two special reference number formats, one to indicate parts in a service assembly and another to indicate the quantity of a given part in an illustration.

Service Assembly Reference Numbers

Parts in service assemblies have reference numbers in the form a:b. The a represents the reference number of the entire service assembly and the b represents a sequential number unique to each part within the service assembly.

For example, a wheel assembly might be identified by reference number 6, the tire by 6:1, the valve by 6:2, and the wheel by 6:3. When you order the assembly identified by reference number 6, you receive all parts identified by reference numbers 6:1,6:2, and 6:3. However, you may also order any part individually. Reference numbers of this type appear in illustration and in parts lists.

Reference Numbers Indicating Quantity

In an illustration, if a reference number indicates more than one part, the reference number has the form nX y. The n represents the quantity of the part, the X is the multiplication symbol, and the y represents the reference number.

For example, in an illustration, the reference number 2X 37 means that two of the parts identified by reference number 37 are indicated.

Contents

Lower Chassis Assembly 4
Front Caster Rework Kit Assembly No. 163-1940 6
Lower Chassis Bellows and Battery Assembly 8
Upper Chassis Assembly 10
Light Camera Module Assembly No. 147-6426 12
Light Camera Module Ultrasonic Assembly No. 147-6427 14
Lift Sensor Assembly No. 138-7684 16
Upper Chassis Wiring Assembly 18
Cutting System Assembly 20
Height-of-Cut Assembly No. 147-6430 22
Shroud Assembly 24
Charging Station Assembly 26
Charging Base Assembly No. 161-4847 28
Handle Assembly No. 161-4848 30
Attachments and Accessories 32

© 2025—The Toro® Company
8111 Lyndale Avenue South
Bloomington, MN 55420

Contact us at www.Toro.com.
Printed in the USA.
All Rights Reserved

Lower Chassis Assembly

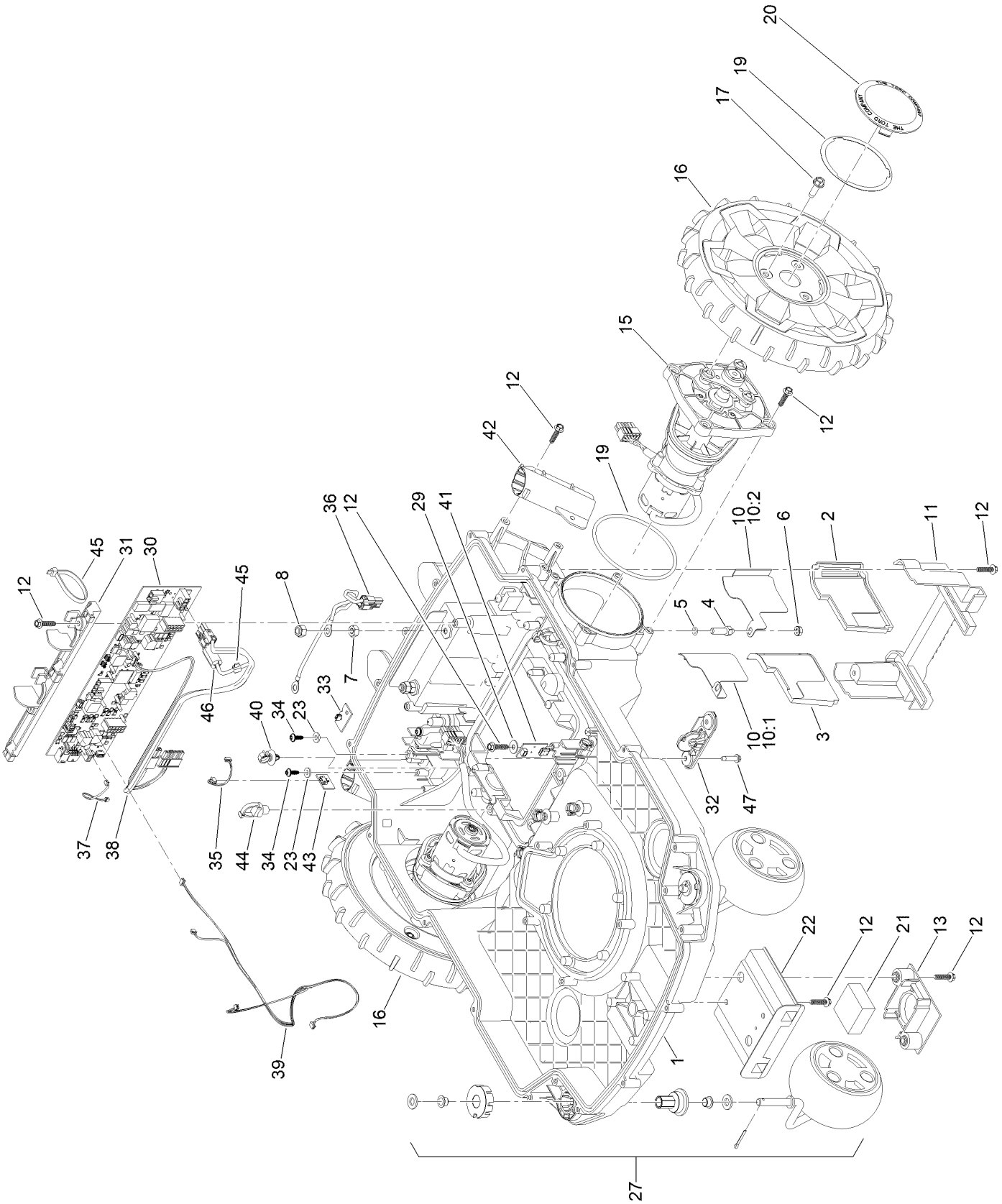

Lower Chassis Assembly (continued)

Ref.	Part Number	Qty.	Description
1	138-5410	1	Chassis-Bottom
2	145-4025	1	Conductor Block LH
3	145-4026	1	Conductor Block RH
4	147-6413	2	Stud-Conductor
5	138-8915	2	O-Ring
6	147-7730	2	Nut-Hex NI
7	147-0578	2	Nut-Hex
8	137-3094	2	Nut-Hex
10	147-6437	1	Conductor Plates ASM
10:1		1	Conductor-RH ●
10:2		1	Conductor-LH ●
11	145-5858	1	Chassis Handle
12	121-9102	30	Screw-HWH
13	147-6385	1	Lid
15	147-6423	1	Motor-Drive
16	147-6424	1	Traction Wheel ASM
17	49-2040	6	Screw-HWHTF
19	140-1348	2	Ring-Cap, Center
20	140-1349	2	Cap-Hub, Wheel
21	147-6351	1	Foam-Dampening
22	147-6378	1	Base
23	94-3868	3	Washer-Flat
27	163-1940	1	Front Caster Rework Kit
29	364-1194	1	Washer-Nylon

Ref.	Part Number	Qty.	Description
30	122-2530	1	P C A Module
31	145-5859	1	B H C Mount
32	140-4100	1	Reed Switch ASM
33	140-4101	1	P C A-Module, Reed Switch
34	145-5837	3	Screw-Plastic,Tbfh
35	147-0457	1	Harness-Wire, Handle Sensor
36	139-5911	1	Harness-Wire Docking Terminals
37	139-5907	1	Harness-Wire, Power Switch
38	139-6397	1	Harness-Wire, Battery Bundle
39	147-0503	1	Harness-Wire, Cutterhead
40	145-1460	6	Clip-Harness
41	145-5872	1	Module-P C A, USB-C Diag Board
42	147-2184	2	*obs* Holder-Tube, Handle
43	122-2544	1	Module-P C A, Dual Analog Hall Sensor
44	32180-030	2	Clip-Tie
45	3290-378	2	Tie-Cable
46	32180-642	1	Ferrite-Core, Snap On
47	163-1919	3	Screw-Plastic, HWH

● Not serviced separately

Front Caster Rework Kit Assembly No. 163-1940

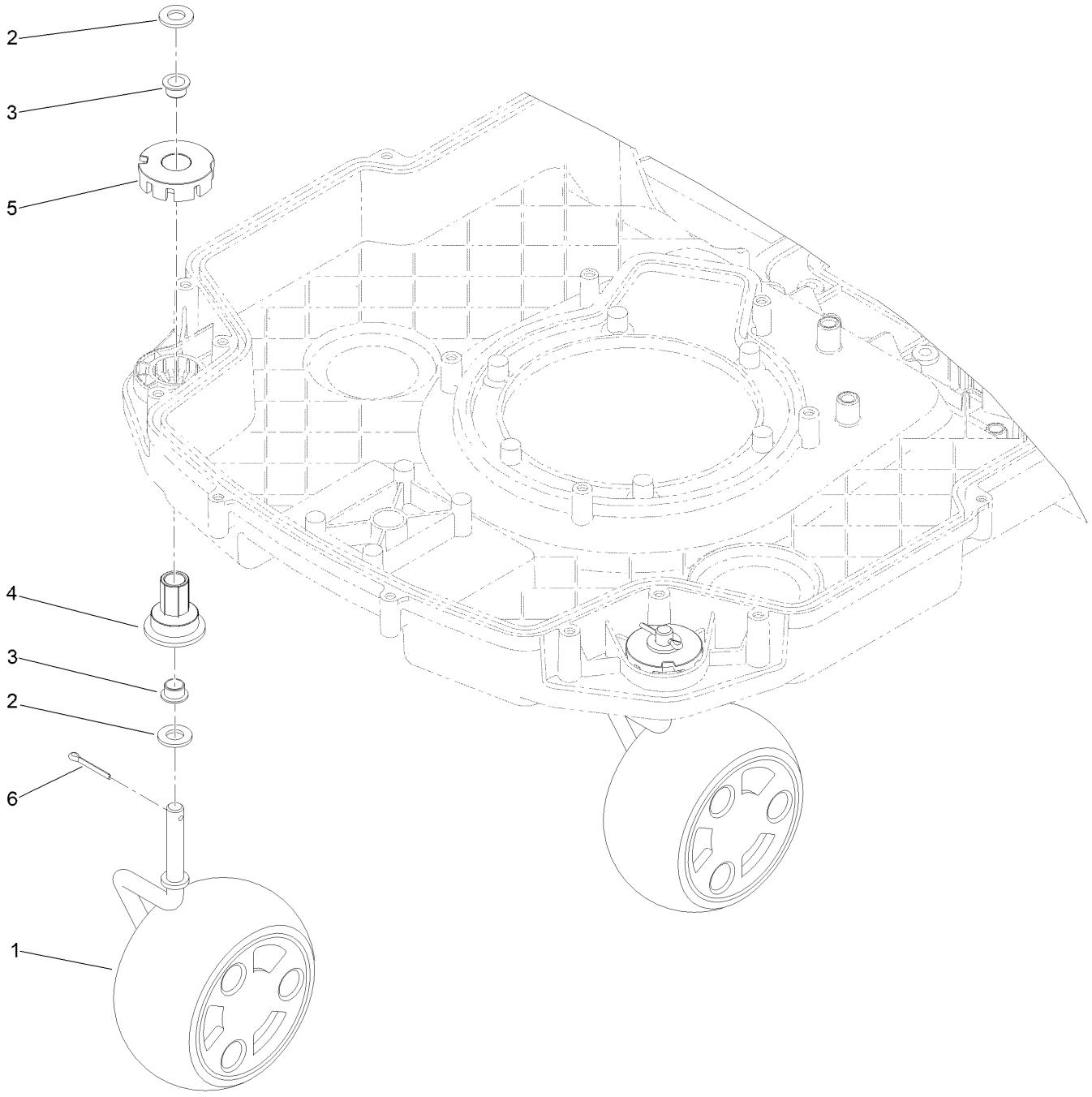

Front Caster Rework Kit Assembly No. 163-1940 (continued)

Ref.	Part Number	Qty.	Description
1	163-1920	2	Wheel-Caster ASM
2	3256-74	4	Washer-Flat
3	138-5538	4	Bushing-Flange
4		2	Support-Bearing, Lower ●
5		2	Support-Bearing, Upper ●
6	120-9716	2	Pin-Cotter

● Not serviced separately

Lower Chassis Bellows and Battery Assembly

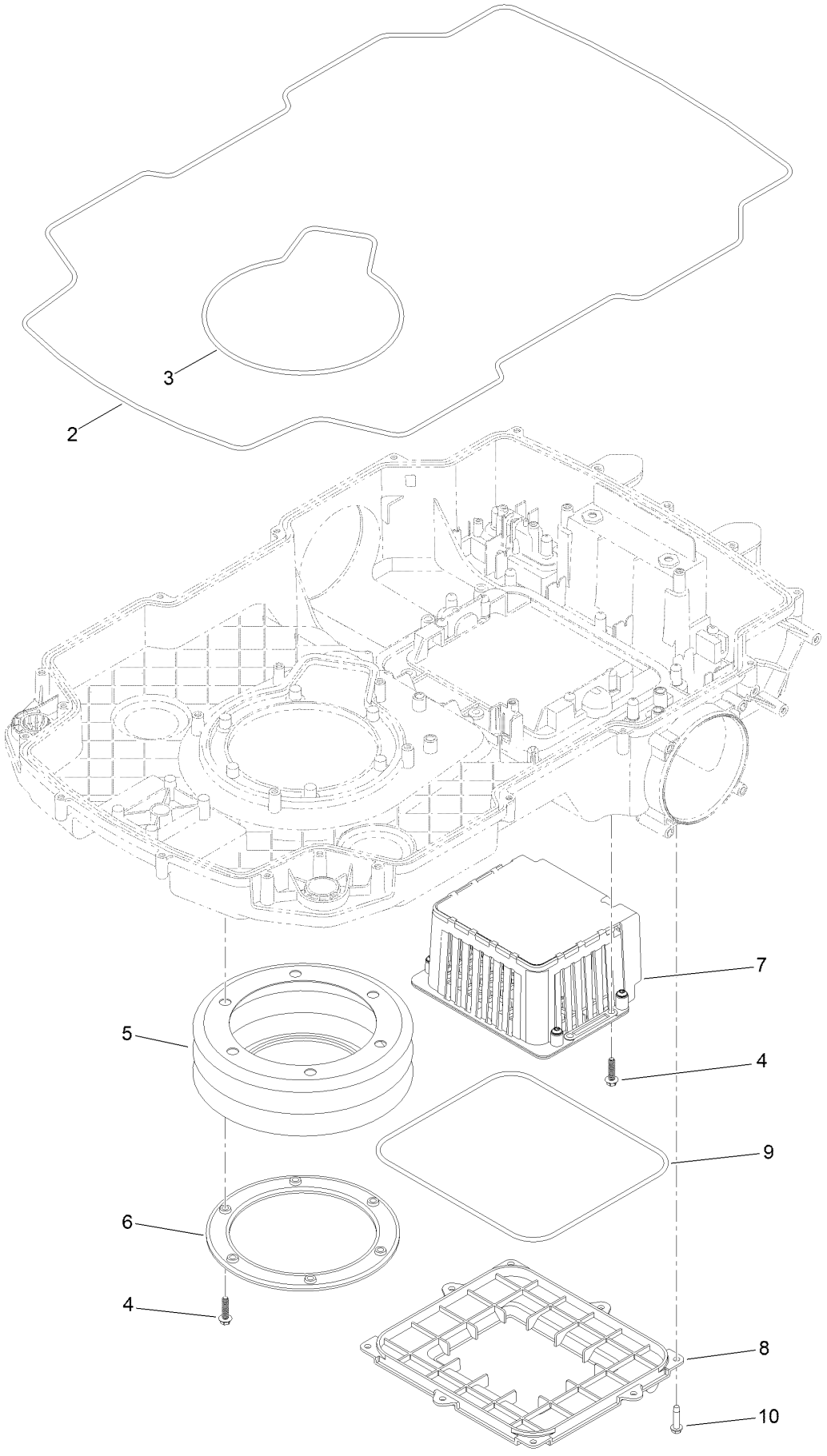

Lower Chassis Bellows and Battery Assembly (continued)

Ref.	Part Number	Qty.	Description
2	139-8932	1	O-Ring
3	139-8934	1	O-Ring
4	121-9102	10	Screw-HWH
5	140-3897	1	Bellows-HOC
6	139-6609	1	Seal-Ring
7	147-6443	1	Battery ASM
8	145-5854	1	Cover-Battery
9	139-8935	1	O-Ring
10	163-1919	8	Screw-Plastic, HWH

Upper Chassis Assembly

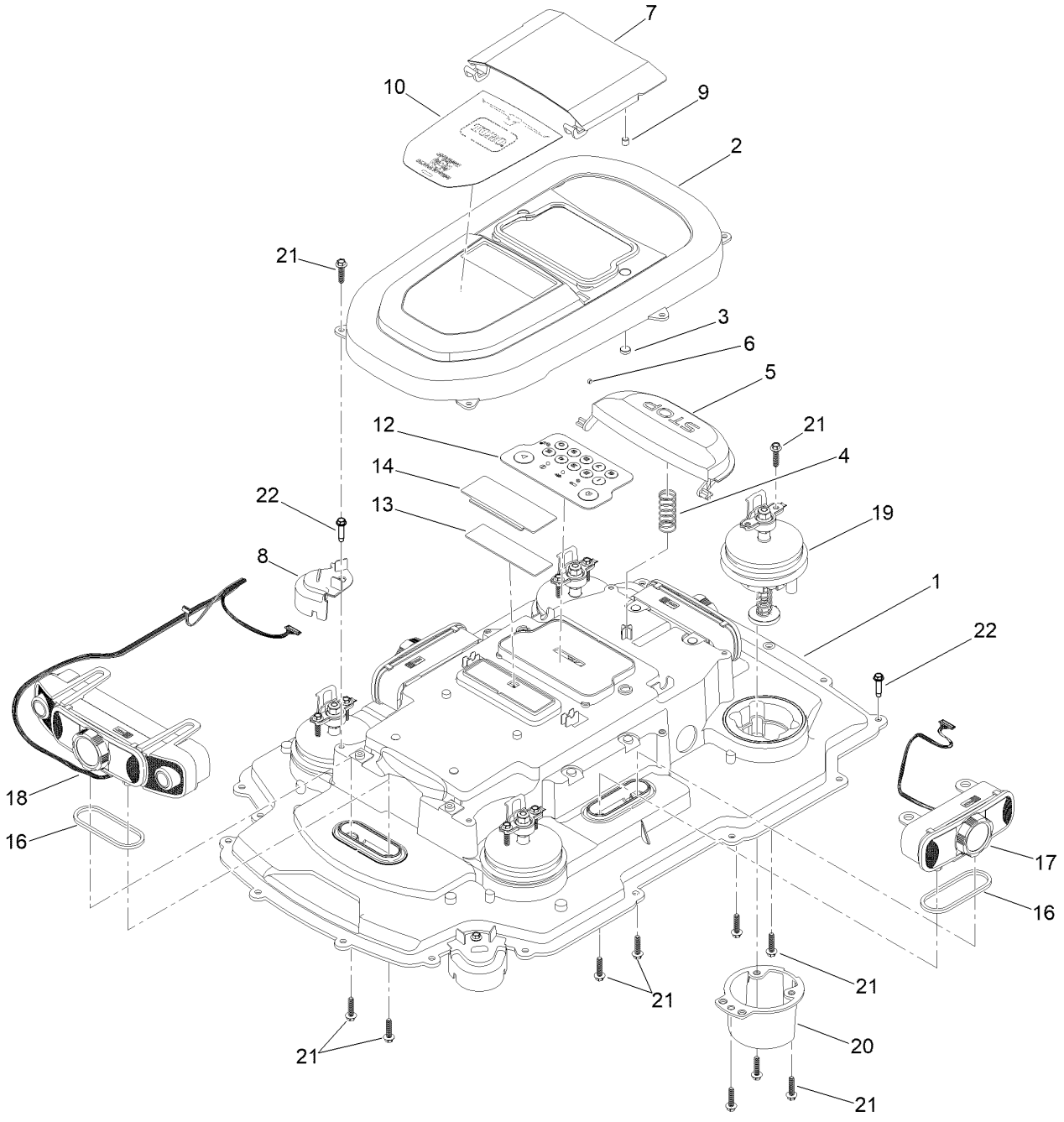

Upper Chassis Assembly (continued)

Ref.	Part Number	Qty.	Description
1	138-5411	1	Chassis-Top
2	147-2211	1	Cover-Chassis Top
3	114-5896	2	Magnet
4	145-3949	1	Spring-Compression
5	147-2206	1	Button-Stop
6	138-5481	1	Magnet
7	147-2207	1	Cover-Keypad
8	140-3944	2	Cover-Caster Wheel
9	145-1522	2	Pin-Plain
10	144-6393	1	Decal-Brand, Top
12	138-5428	1	Keypad
13	145-5880	1	LED Running Light
14	147-0474	1	LED Cover
16	144-3176	4	Light Camera Module Gasket
17	147-6426	1	Light Camera Module ASM
18	147-6427	1	Light Camera Module Ultrasonic
19	138-7684	4	Lift Sensor ASM
20	144-6432	4	Retainer-Sensor
21	121-9102	42	Screw-HWH
22	163-1919	19	Screw-Plastic, HWH

Light Camera Module Assembly No. 147-6426

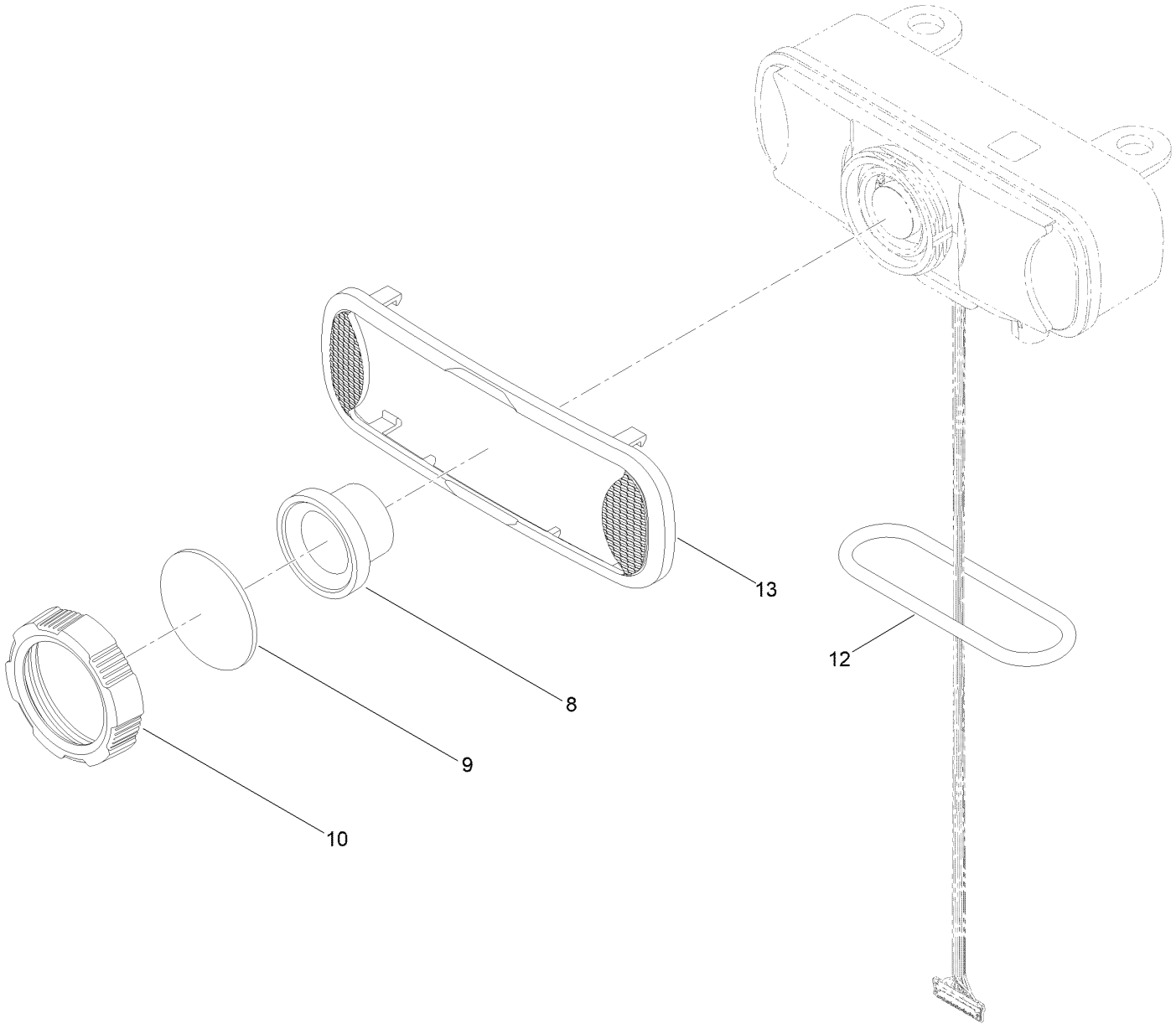

Light Camera Module Assembly No. 147-6426 (continued)

Ref.	Part Number	Qty.	Description
8	144-6383	1	O-Ring
9	163-1945	1	Lens Protector Kit, 4-Pack
10	140-4132	1	Cap-Lens
12	144-6382	1	O-Ring
13	144-6363	1	Bezel

Light Camera Module Ultrasonic
Assembly No. 147-6427

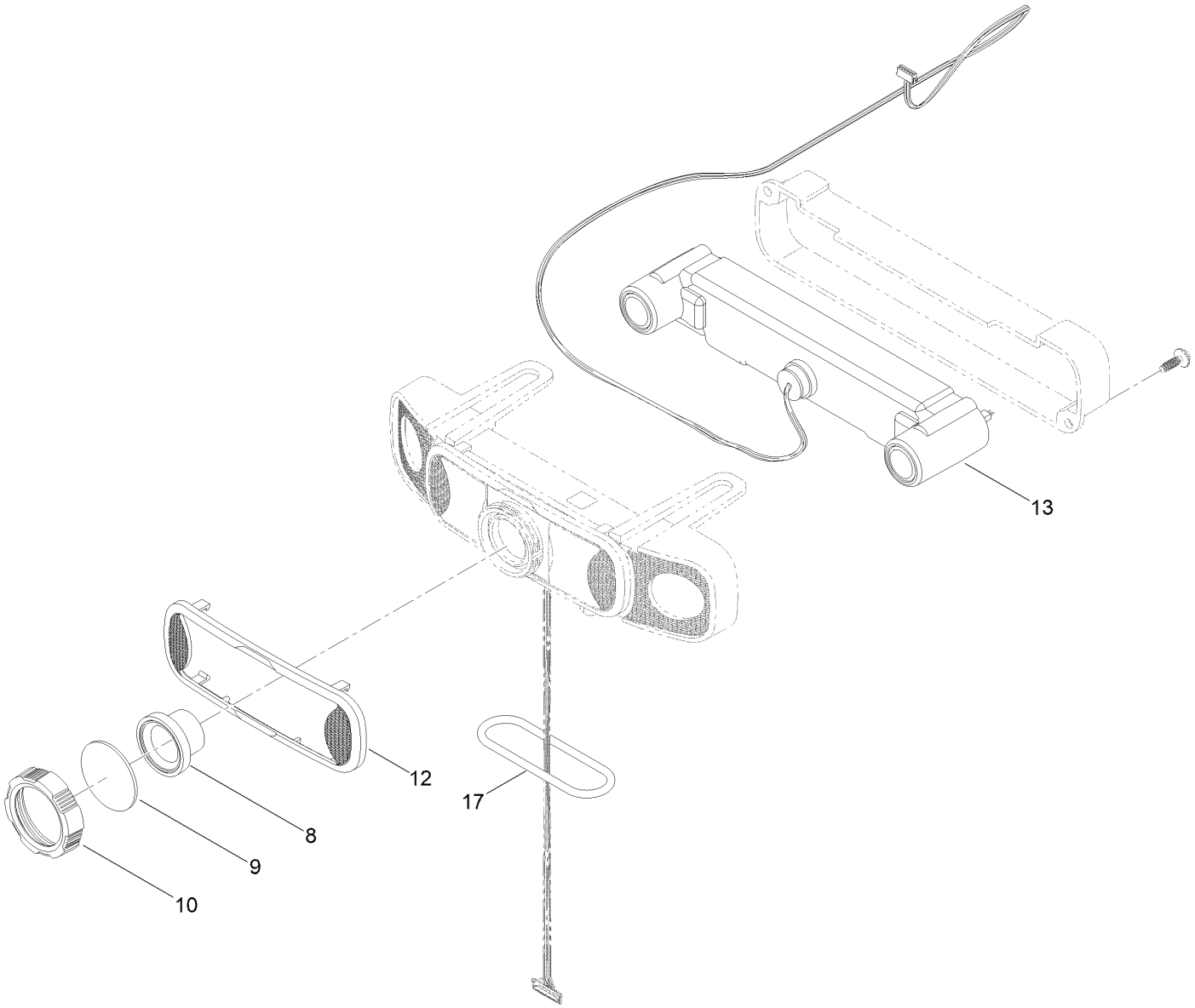

Light Camera Module Ultrasonic
Assembly No. 147-6427 (continued)

Ref.	Part Number	Qty.	Description
8	144-6383	1	O-Ring
9	163-1945	1	Lens Protector Kit, 4-Pack
10	140-4132	1	Cap-Lens
12	144-6363	1	Bezel
13	147-6429	1	Module-Ultrasonic
17	144-6382	1	O-Ring

Lift Sensor Assembly No. 138-7684

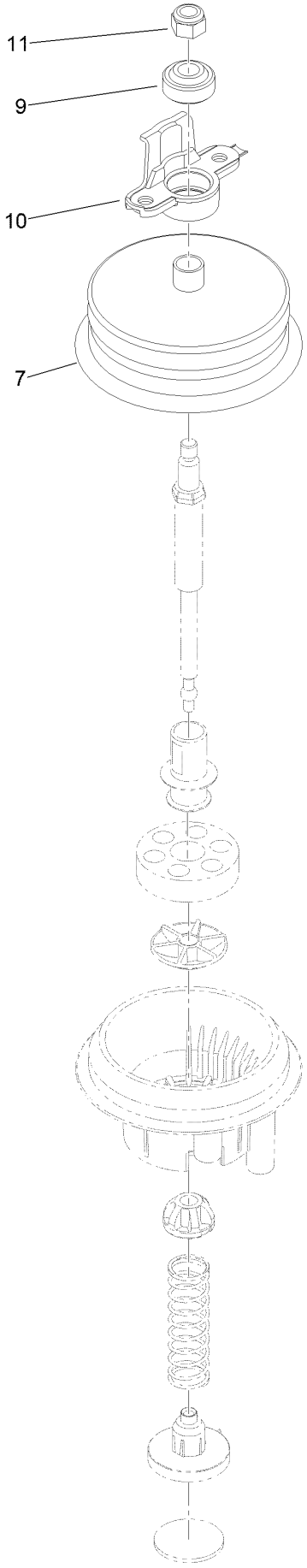

Lift Sensor Assembly No. 138-7684 (continued)

Ref.	Part Number	Qty.	Description
7	138-7659	1	Bellow
9	144-6399	1	Bearing-Spherical
10	147-0430	1	Coupler
11	137-3094	1	Nut-Hex

Upper Chassis Wiring Assembly

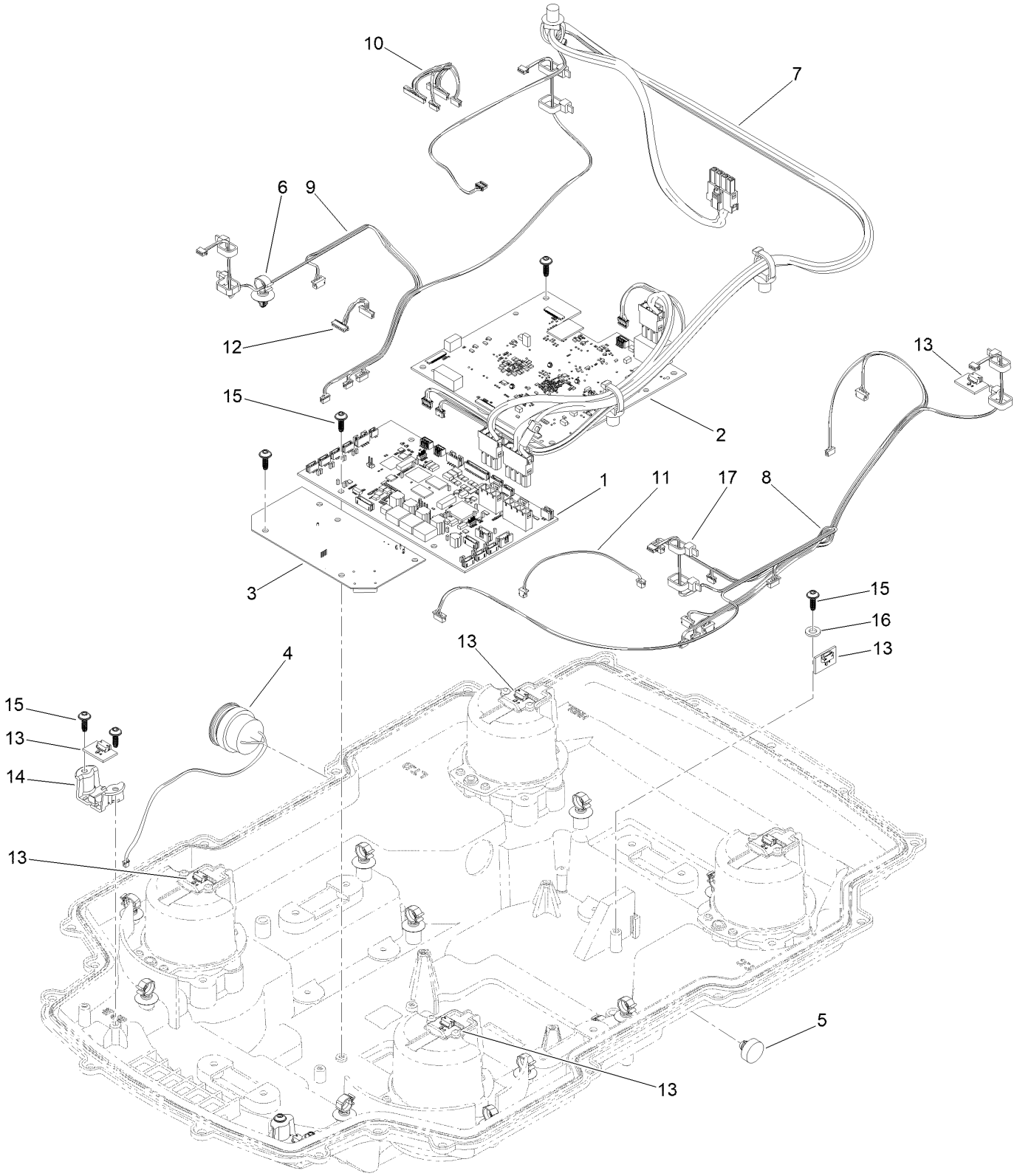

Upper Chassis Wiring Assembly (continued)

Ref.	Part Number	Qty.	Description
1	122-2523	1	Pca-Module, Trc-Pl01
2	139-5492	1	Vision Control Board ASM
3	118-6999	1	Pcb, Pca-Com Ocb ASM
4	139-5946	1	Buzzer
5	144-0271	1	Vent-Snap In
6	145-1460	12	Clip-Harness
7	163-1916	1	Harness-Wire, Bottom To Top
8	139-6399	1	Harness-Wire, RH Top
9	139-6400	1	Harness-Wire, LH Top
10	139-6378	1	Harness-Wire, Key Pad
11	147-0460	1	Harness-Wire, Running Light
12	139-5906	1	Harness-Wire, Communications ASM
13	122-2544	7	Module-P C A, Dual Analog Hall Sensor
14	145-1472	2	Holder-Sensor
15	145-5837	17	Screw-Plastic,Tbfh
16	94-3868	1	Washer-Flat
17	3290-378	8	Tie-Cable

Cutting System Assembly

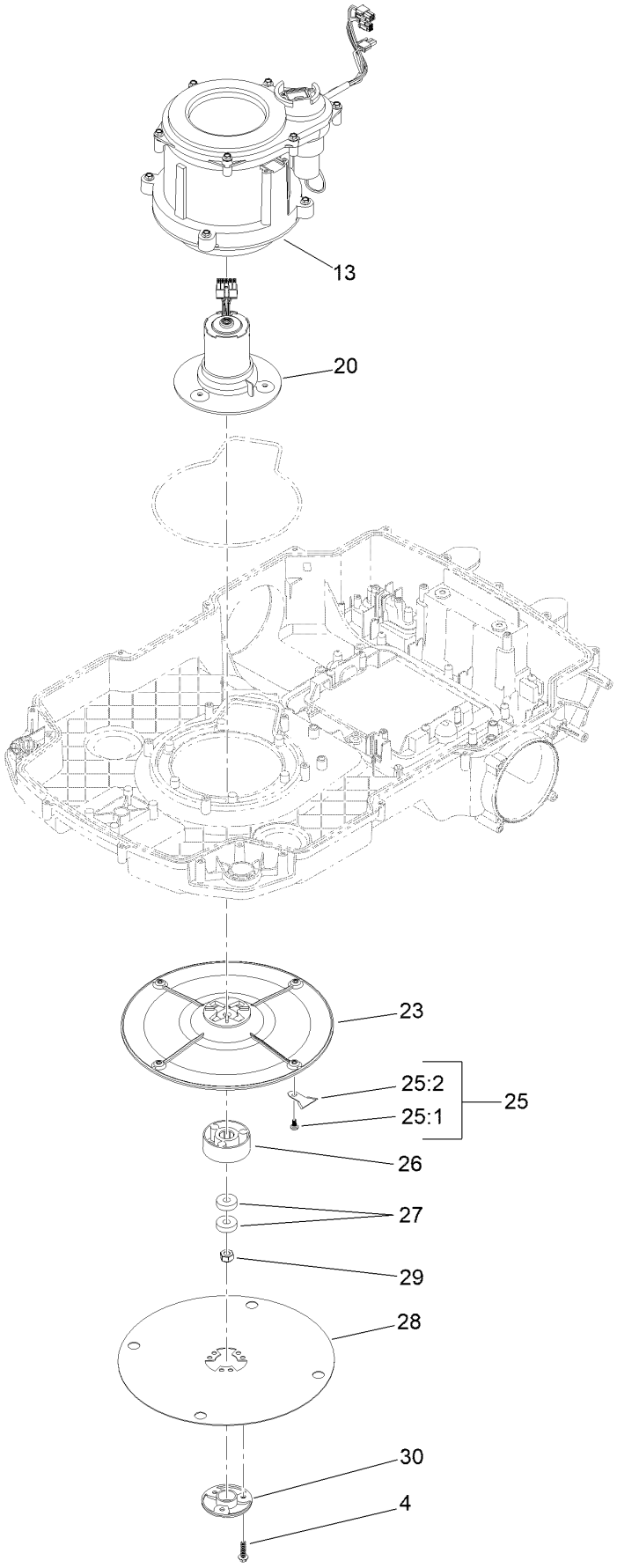

Cutting System Assembly (continued)

Ref.	Part Number	Qty.	Description
4	121-9102	24	Screw-HWH
13	147-6430	1	HOC ASM
20	140-3786	1	Cutter Motor ASM
23	145-5833	1	Blade Disc With Inserts ASM
25	147-6432	1	Blade ASM
25:1		4	Screw-Shoulder, PH/Sp ●
25:2		4	Blade ●
26	147-6431	1	Disc Mount ASM
27	140-4099	2	Bearing-Ball
28	144-6418	1	Guard-Disc, Blade
29	119-4038	1	Nut-Hex
30	144-6417	1	Nut-Cover, Blade

● Not serviced separately

Height-of-Cut Assembly No. 147-6430

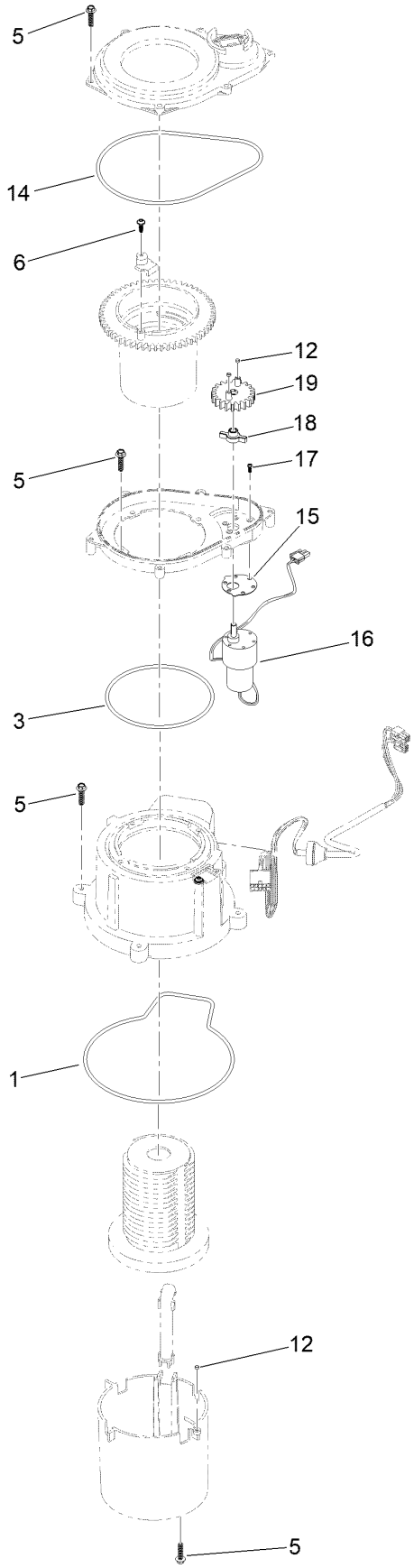

Height-of-Cut Assembly No. 147-6430 (continued)

Ref.	Part Number	Qty.	Description
1	139-8934	1	O-Ring
3	139-8941	1	O-Ring
5	121-9102	18	Screw-HWH
6	145-5837	1	Screw-Plastic,Tbfh
12	138-5481	3	Magnet
14	140-4035	1	O-Ring
15	139-8997	1	Gasket-Motor, HOC
16	138-5454	1	Motor-HOC
17	145-3948	6	Screw-Php
18	140-1343	1	Hub-Gear
19	140-1342	1	Gear-Motor, HOC

Shroud Assembly

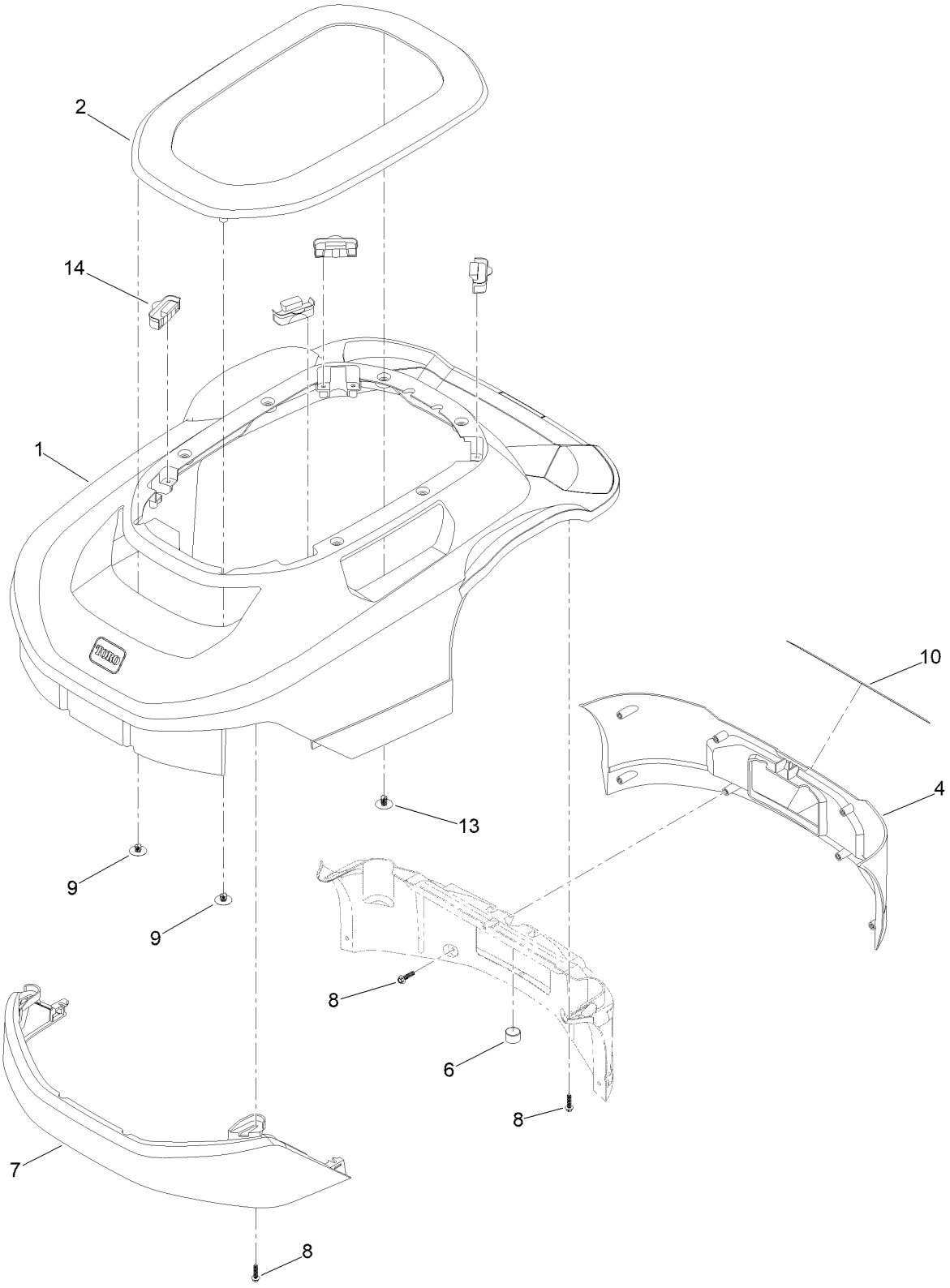

Shroud Assembly (continued)

Ref.	Part Number	Qty.	Description
1	161-4838	1	Shroud ASM
2	161-3187	1	Shroud, Body-Lid
4	147-6389	1	Rear Shroud ASM
6	147-6375	1	Magnet-N35
7	147-6356	1	Shroud, Front Bumper
8	121-9102	19	Screw-HWH
9	130-6721	2	Clip-Tree
10	140-4055	1	Decal-Warning
13	161-3175	6	Clip-Tree
14	147-6393	4	Coupler-Boot

Charging Station Assembly

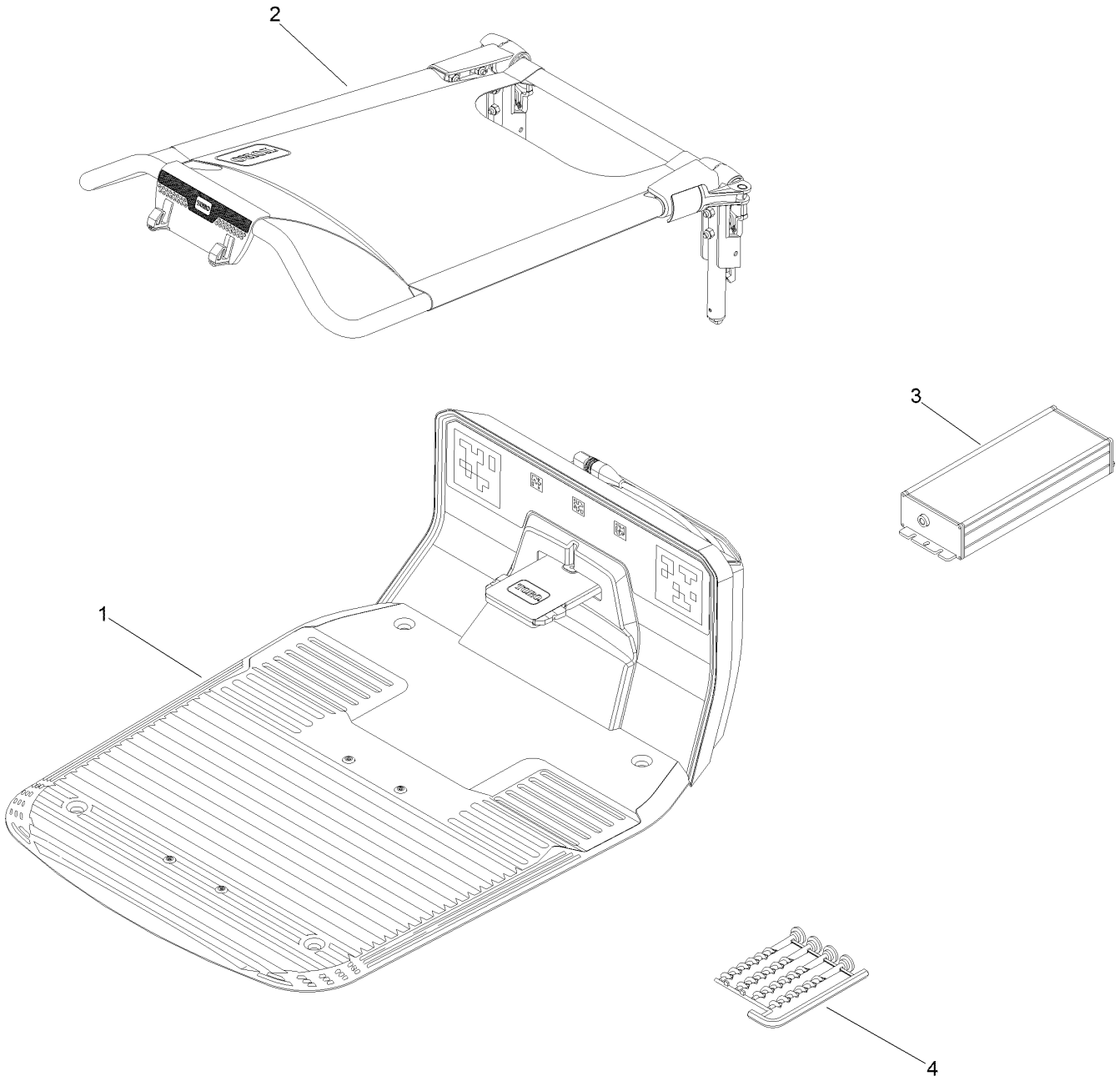

Charging Station Assembly (continued)

Ref.	Part Number	Qty.	Description
1	161-4847	1	Charging Base ASM
2	161-4848	1	Handle ASM
3	140-3845	1	Power Supply
4	145-1741	1	Stake-Ground

Charging Base Assembly No. 161-4847

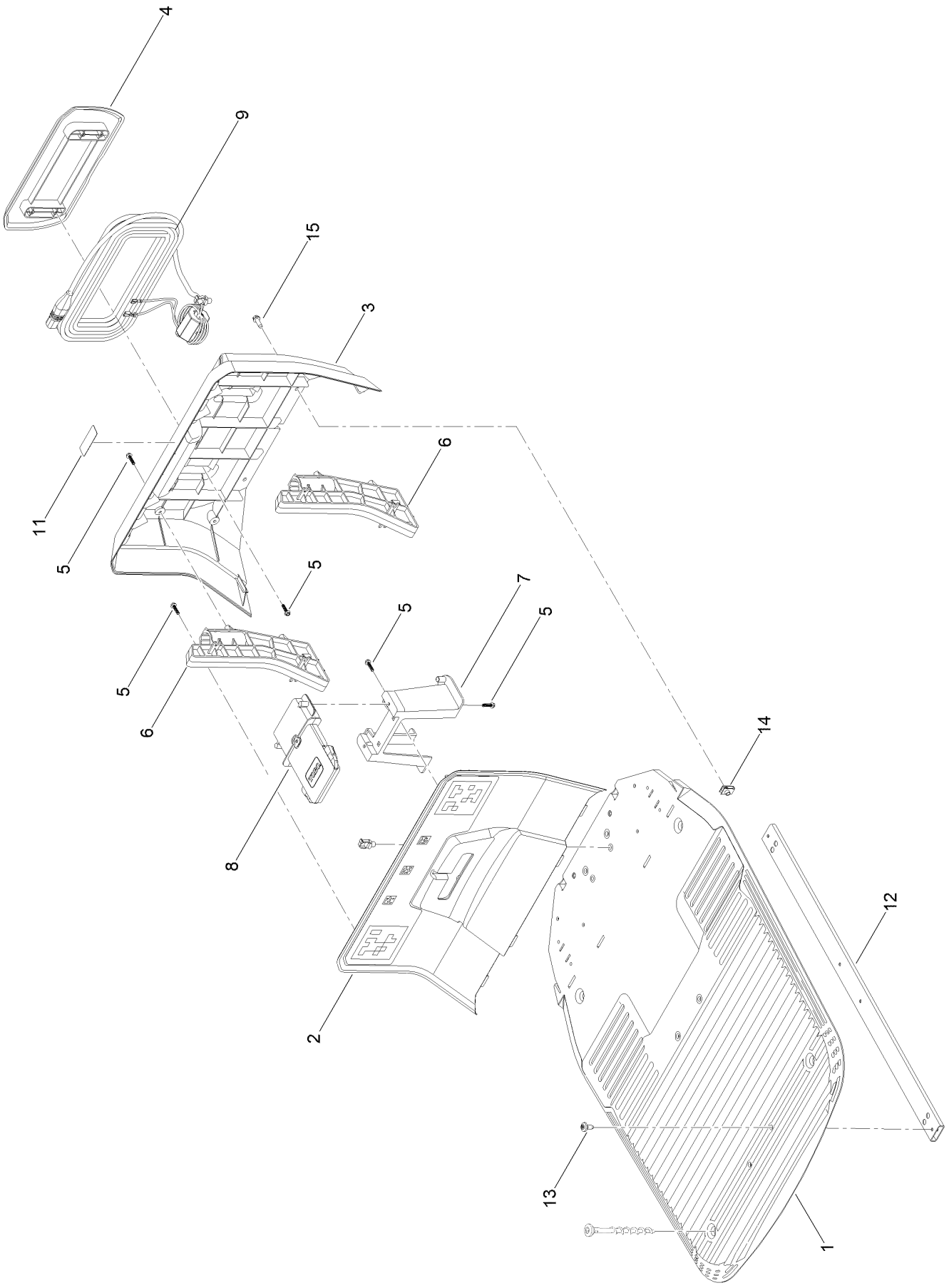

Charging Base Assembly No. 161-4847 (continued)

Ref.	Part Number	Qty.	Description
1	147-2241	1	Base-Charger
2	147-6433	1	Panel-Front, Charger
3	147-6434	1	Panel-Rear, Charger
4	147-2245	1	Wrap-Cord, Charger
5	121-9102	28	Screw-HWH
6	147-2246	2	Bracket-Handle
7	147-2247	1	Mount-Housing, Conductor
8	145-4041	1	Conductor Housing ASM
9	163-1908	1	Harness-Wire, Power Supply Cable ASM
11	137-9705	1	Decal-Charger
12	147-6415	2	Tube-Stiffener
13	120-7950	6	Screw-Torx
14	107069	2	Clip
15	49-2040	2	Screw-HWHTF

Handle Assembly No. 161-4848

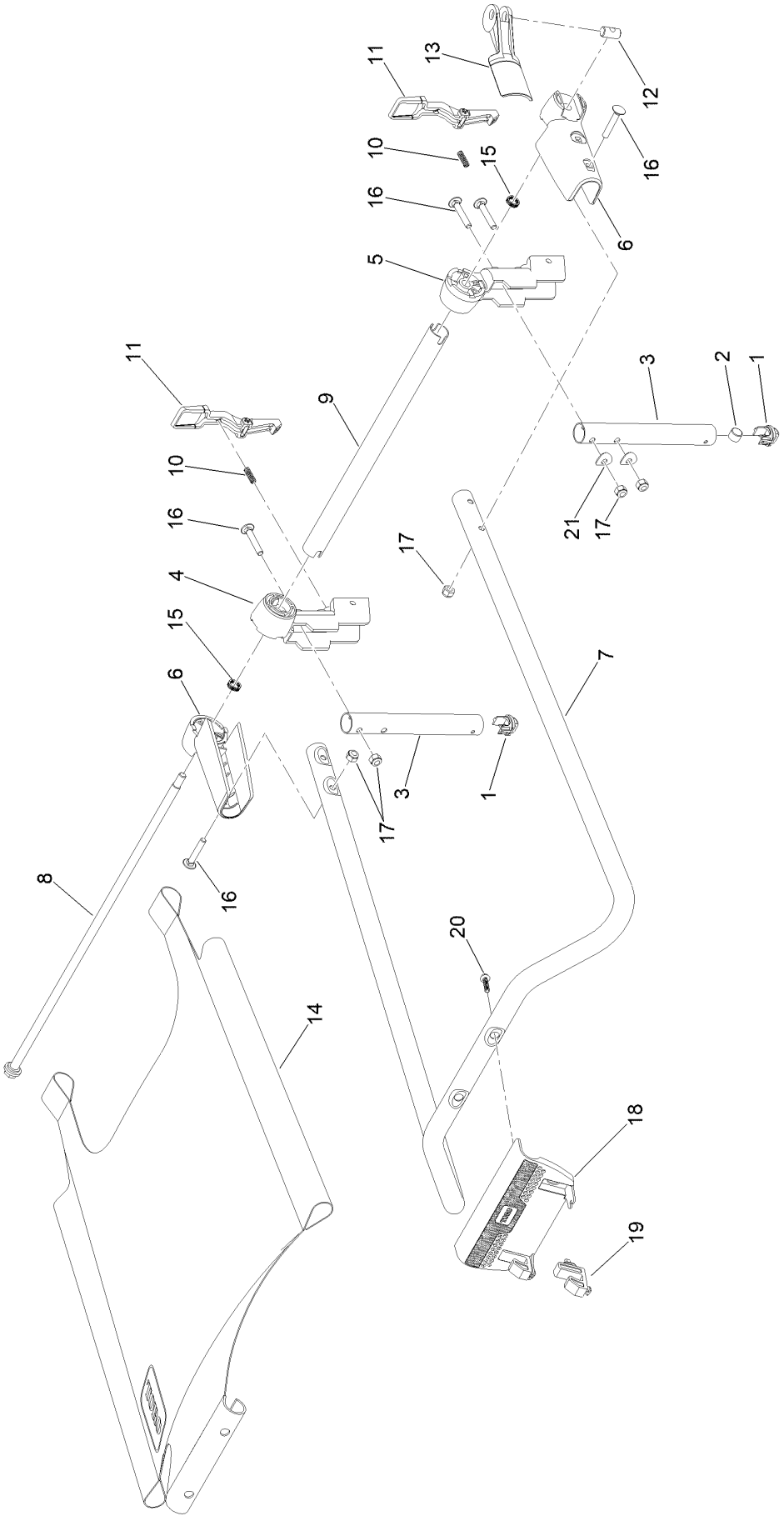

Handle Assembly No. 161-4848 (continued)

Ref.	Part Number	Qty.	Description
1	147-2191	2	Retainer-Magnet
2	147-2215	1	Magnet-N35
3	147-6436	2	Tube-Lower
4	147-2232	1	Mount-Handle, LH
5	147-2233	1	Mount-Handle, RH
6	147-2231	2	Mount-Handle
7	147-2189	1	Handle-Upper
8	147-6400	1	Rod-Handle
9	147-2220	1	Spanner-Handle
10	147-2153	2	Spring-Compression
11	147-2234	2	Lever-Release
12	147-2225	1	Fitting-Cam, 5/16 X 18
13	147-2224	1	*obs* Lever-Lock, Cam
14	147-2190	1	Canopy-Base
15	161-3176	2	Spring-Wave
16	137-3011	8	Bolt-CARR
17	137-3094	8	Nut-Hex
18	147-6350	1	Tray-Phone
19	147-2194	2	Clip-Holder
20	121-9102	2	Screw-HWH
21	147-6446	4	Washer-Curved

Attachments and Accessories

For 31062 Haven Robotic 5000m^2 Lawn Mower

Product Name	Model/Part
Blade Assembly	147-6432
Lens Protector Kit, 4-Pack	163-1945

Notes:

Notes:

Notes:



Count on it.