Form No. 3477-708 Rev A

TORO®

Count on it.

Parts Catalog

Reelmaster® 5010-H

Traction Unit

Model No. 03950—Serial No. 419044402 and Up

Register at www.Toro.com.
Original Instructions (EN)

CE

3477-708 A

Ordering Replacement Parts

To order replacement parts, please supply the part number, the quantity, and the description of each part desired.

Understanding Reference Numbers

Each identified part in an illustration has a reference number. The reference number for a part also appears in the parts list, along with other information about the part.

This catalog uses two special reference number formats, one to indicate parts in a service assembly and another to indicate the quantity of a given part in an illustration.

Service Assembly Reference Numbers

Parts in service assemblies have reference numbers in the form a:b. The a represents the reference number of the entire service assembly and the b represents a sequential number unique to each part within the service assembly.

For example, a wheel assembly might be identified by reference number 6, the tire by 6:1, the valve by 6:2, and the wheel by 6:3. When you order the assembly identified by reference number 6, you receive all parts identified by reference numbers 6:1,6:2, and 6:3. However, you may also order any part individually. Reference numbers of this type appear in illustration and in parts lists.

Reference Numbers Indicating Quantity

In an illustration, if a reference number indicates more than one part, the reference number has the form nX y. The n represents the quantity of the part, the X is the multiplication symbol, and the y represents the reference number.

For example, in an illustration, the reference number 2X 37 means that two of the parts identified by reference number 37 are indicated.

Contents

Frame Assembly . . . 5
Platform and Shroud Assembly . . . 6
Pedal Assembly . . . 7
Steering Assembly . . . 8
Steering Tilt Column Assembly No. 106-3622 . . . 9
Steering Valve Assembly No. 106-3621 . . . 10
Control Panel Assembly . . . 11
Joystick Bracket Assembly No. 120-5280 . . . 13
Front Axle Assembly . . . 14
Rear Axle Assembly . . . 15
Tie Rod Assembly No. 139-6029 . . . 16
Hub and Spindle Assembly No. 117-8961 . . . 17
No. 1, 4 and 5 Lift Arm Assembly . . . 18
No. 2 and 3 Lift Arm Assembly . . . 20
Seat and Control Arm Wiring Harness Assembly . . . 21
Battery Electrical Assembly . . . 22
Electrical Assembly . . . 23
Wire Harness Assembly No. 122-2913 . . . 24
Gear Pump Assembly . . . 25
Tandem Gear Pump Assembly No. 125-1530 . . . 26
Seat Base Assembly . . . 27
Hood Assembly . . . 28
Radiator Assembly . . . 29
Fuel System Assembly . . . 31
Hydraulic Tank Assembly . . . 32
Seat and Roll-Over Protection System Assembly . . . 33
Seat Assembly No. 139-2700 . . . 34
Mechanical Seat Suspension Assembly No. 145-5295 . . . 35
Traction Pump Mounting Assembly . . . 36
Hydraulic Pump Assembly No. 144-2060 . . . 37
Traction Hydraulic Assembly . . . 39
Hydraulic Motor Assembly No. 163-3542 . . . 40
Hydraulic Motor Assembly No. 163-3543 . . . 41
Hydraulic Brake Assembly . . . 42
Brake Release Manifold Assembly No. 139-6046 . . . 43
Front Lift Hydraulic Assembly . . . 44
Hydraulic Cylinder Assembly No. 138-6999 . . . 45
Hydraulic Cylinder Assembly No. 163-3534 . . . 46
Hydraulic Manifold Block Assembly No. 105-7577 . . . 47
Rear Lift Hydraulic Assembly . . . 48
Steering Hydraulic Assembly . . . 49
Hydraulic Cylinder Assembly No. 110-9035 . . . 51
Engine, Air Cleaner and Muffler Assembly . . . 52
Air Cleaner Assembly No. 106-5277 . . . 54
48 Volt Battery Assembly . . . 55
48 Volt Contactor Assembly . . . 56
Reel Motor Plumbing Assembly . . . 57
Generator And Drive Shaft Assembly . . . 58
Generator/Controller Assembly No. 127-2655 . . . 59
Generator Assembly No. 127-2653 . . . 60
Driveshaft Assembly No. 139-6044 . . . 61
Crankcase Assembly . . . 62
Oil Pan and Dipstick Assembly . . . 63
Cylinder Head Assembly . . . 64

© 2025—The Toro® Company

8111 Lyndale Avenue South
Bloomington, MN 55420

Contact us at www.Toro.com.
Printed in the USA.
All Rights Reserved

Contents (continued)

Gear Case and Oil Filter Cartridge Assembly 65
Cylinder Head Cover Assembly 66
Main Bearing Case Assembly 67
Camshaft and Idle Gear Shaft Assembly 68
Piston and Crankshaft Assembly 69
Fuel Camshaft and Governor Shaft Assembly 70
Idle Apparatus Assembly 71
Injection Pump Assembly 72
Governor Assembly 73
Speed Control Plate Assembly 74
Nozzle Holder and Glow Plug Assembly 75
Nozzle Holder Assembly 76
Cover Assembly 77
Alternator, Pulley and Fan Assembly 78
Alternator Assembly No. 131-6557 79
Starter and Flywheel Assembly 80
Starter Assembly No. 131-6561 81
Water Flange and Thermostat Assembly 82
Water Pump Assembly 83
Valve and Rocker Arm Assembly 84
Inlet and Exhaust Manifold Assembly 85
Miscellaneous Engine Parts 86
Attachments and Accessories 87

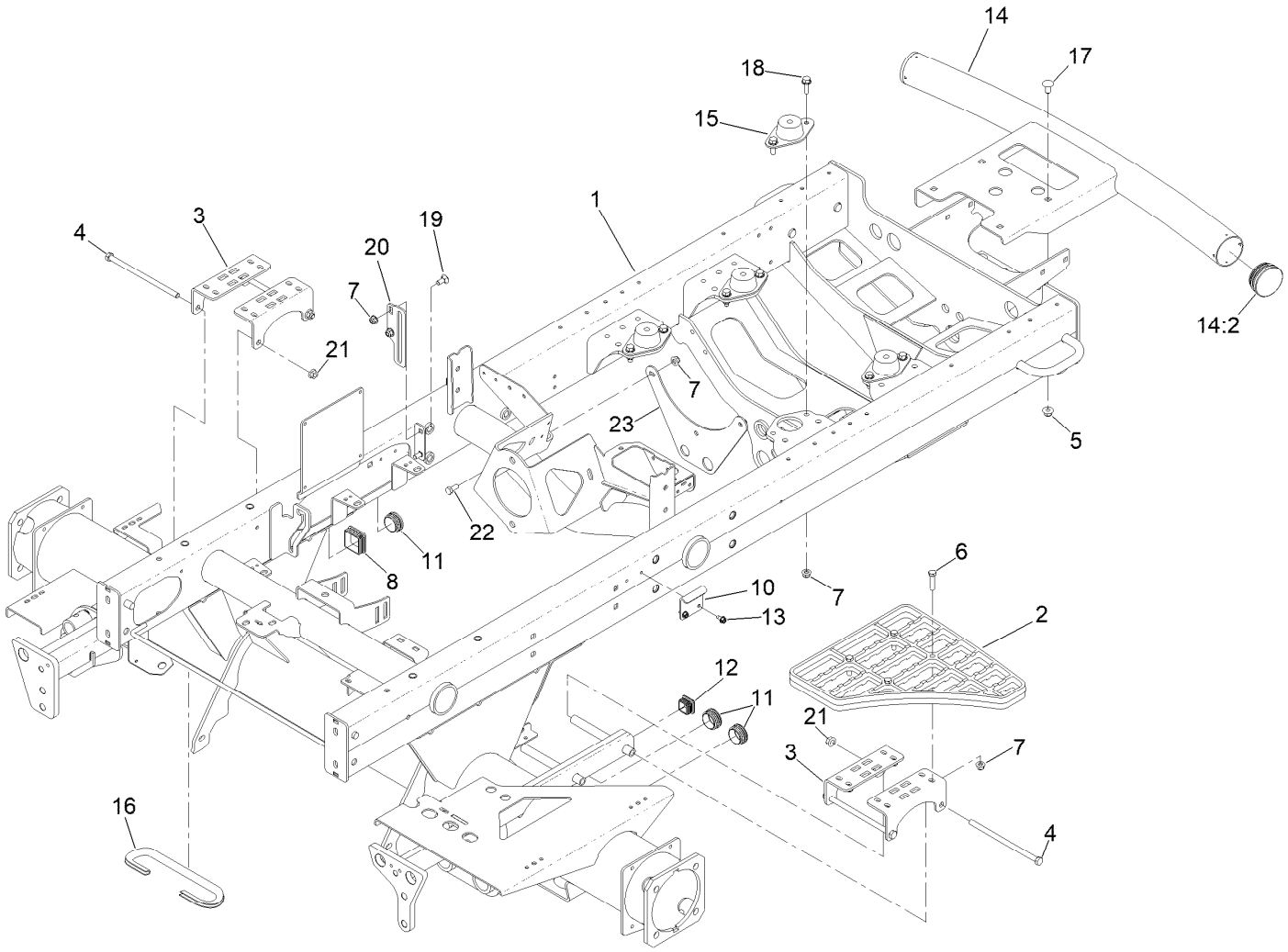

Frame Assembly

Ref.	Part Number	Qty.	Description
1	145-2467	1	Frame ASM-Hybrid
2	110-9041	1	Step-Aluminum
3	127-2697-01	4	Bracket-Step
4	323-36	4	Screw-HH
5	104-8301	4	Nut-HF, NI
6	322-17	4	Screw-HH
7	104-8300	16	Nut-HF, NI
8	95-9495	1	Cap
10	110-8972	1	Hook-Latch
11	110-9012	3	Caplug
12	110-9013	1	Caplug
13	32104-17	2	Screw-HWH

Ref.	Part Number	Qty.	Description
14	147-3550	1	Bumper ASM
14:2	2410-42	2	Cap-End
15	120-6274	4	Mount-Engine
16	145-2520	1	Trim-Brake Hose
17	3231-21	4	Screw-CARR
18	3234-29	8	Screw-HHF
19	3230-1	2	Bolt-CARR
20	108-7584-01	1	Plate-Guide, Rod
21	32128-21	4	Nut-HF Lock
22	322-3	2	Screw-HH
23	145-2559-01	1	Bracket-Bulkhead

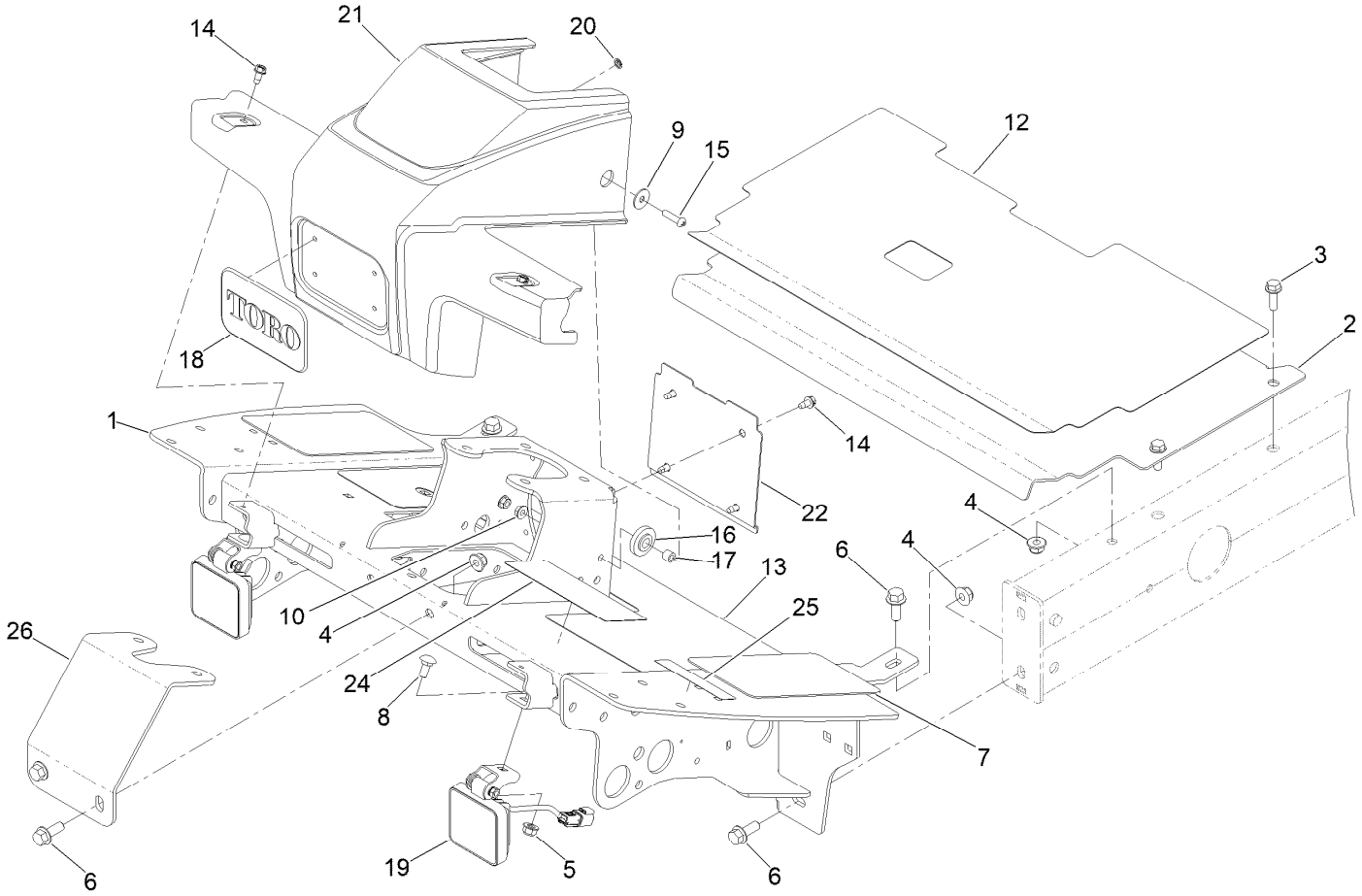

Platform and Shroud Assembly

Ref.	Part Number	Qty.	Description
1	145-2490-01	1	Platform ASM
2	115-8064-01	1	Plate-Floor
3	3234-17	4	Screw-HHF
4	104-8301	6	Nut-HF, NI
5	104-8300	2	Nut-HF, NI
6	3234-11	6	Screw-HHF
7	125-2910	2	Tread-Floor, Side
8	3230-1	2	Bolt-CARR
9	87-6630	2	Washer-Plain
10	32128-33	2	Nut-HF
12	125-2911	1	Tread-Panel, Service
13	145-2510	1	Tread-Floor Board
14	32104-17	6	Screw-HWH
15	106-9518	2	Screw-PRH
16	240-11	2	Bushing-Flange
17	66-8010	2	Spacer
18	93-6028	1	Plate-Logo
19	145-2598	2	Light-Work, LED
20	138-6996	4	Nut-Push
21	110-0944	1	Shroud-Platform
22	110-0947-03	1	Plate-Cover
24	133-2930	1	Decal-Danger
24	133-2931	1	Decal-Danger (CE)
25	133-8062	1	Decal-Spark Arrestor
26	110-8876-0P	1	Brace-Column

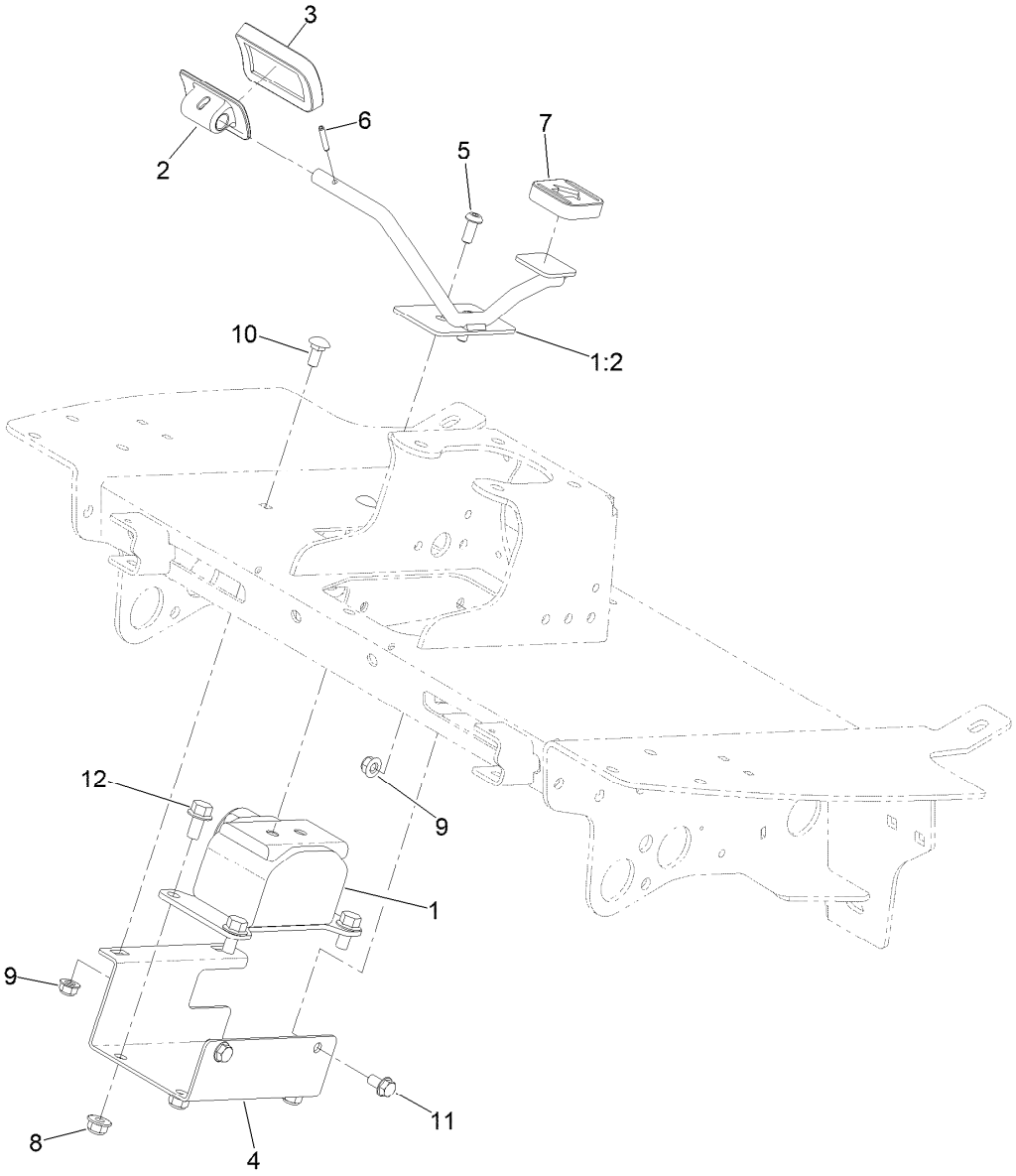

Pedal Assembly

Ref.	*Part Number*	*Qty.*	*Description*
1	145-2545	1	E-Pedal ASM
1:2	145-2521	1	Pedal ASM
2	117-9507	1	Pedal-Accelerator
3	74-9100	1	Pad-Pedal, Forward
4	145-2489-0P	1	Bracket-Pedal, Mount
5	3274-96	2	Screw-HSBH
6	32121-45	1	Pin-Spring
7	74-9110	1	Pad-Pedal, Reverse
8	104-8301	4	Nut-HF, NI
9	104-8300	4	Nut-HF, NI
10	3230-1	2	Bolt-CARR
11	3234-7	2	Screw-HHF
12	3234-1	4	Screw-HHF

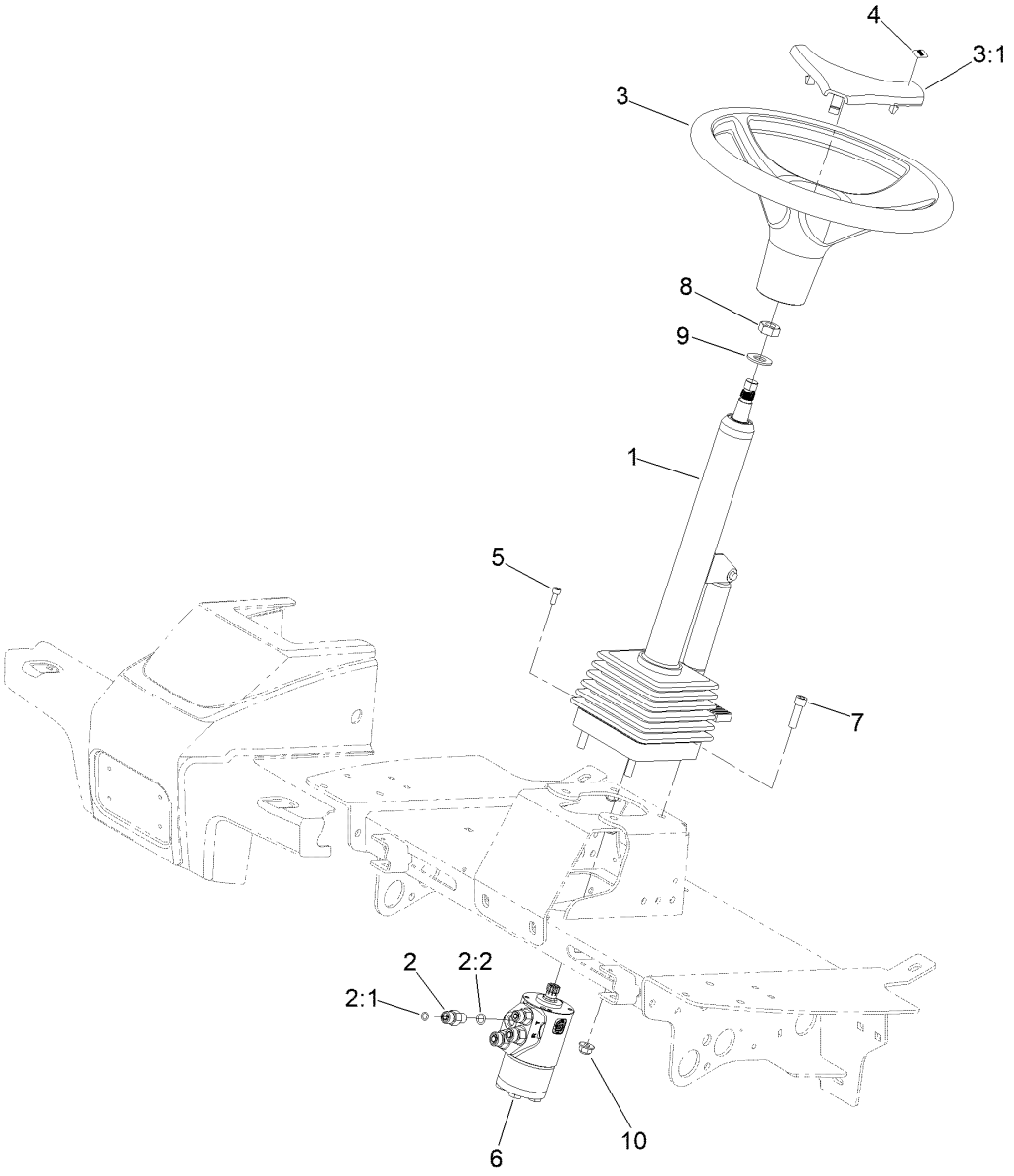

Steering Assembly

Ref.	*Part Number*	*Qty.*	*Description*
1	106-3622	1	Steering Tilt Column ASM
2	340-2	4	Fitting-Straight
2:1	237-22	1	O-Ring
2:2	237-42	1	O-Ring
3	98-1471	1	Wheel-Steering
3:1	98-1468	1	Cover-Wheel, Steering
4	98-1459	1	Decal
5	105-2409	4	Screw-HSH
6	106-3621	1	Steering Valve ASM
7	3274-1	4	Screw-HSH
8	3296-33	1	Nut-Lock, NI
9	3256-27	1	Washer-Flat
10	104-8301	4	Nut-HF, NI

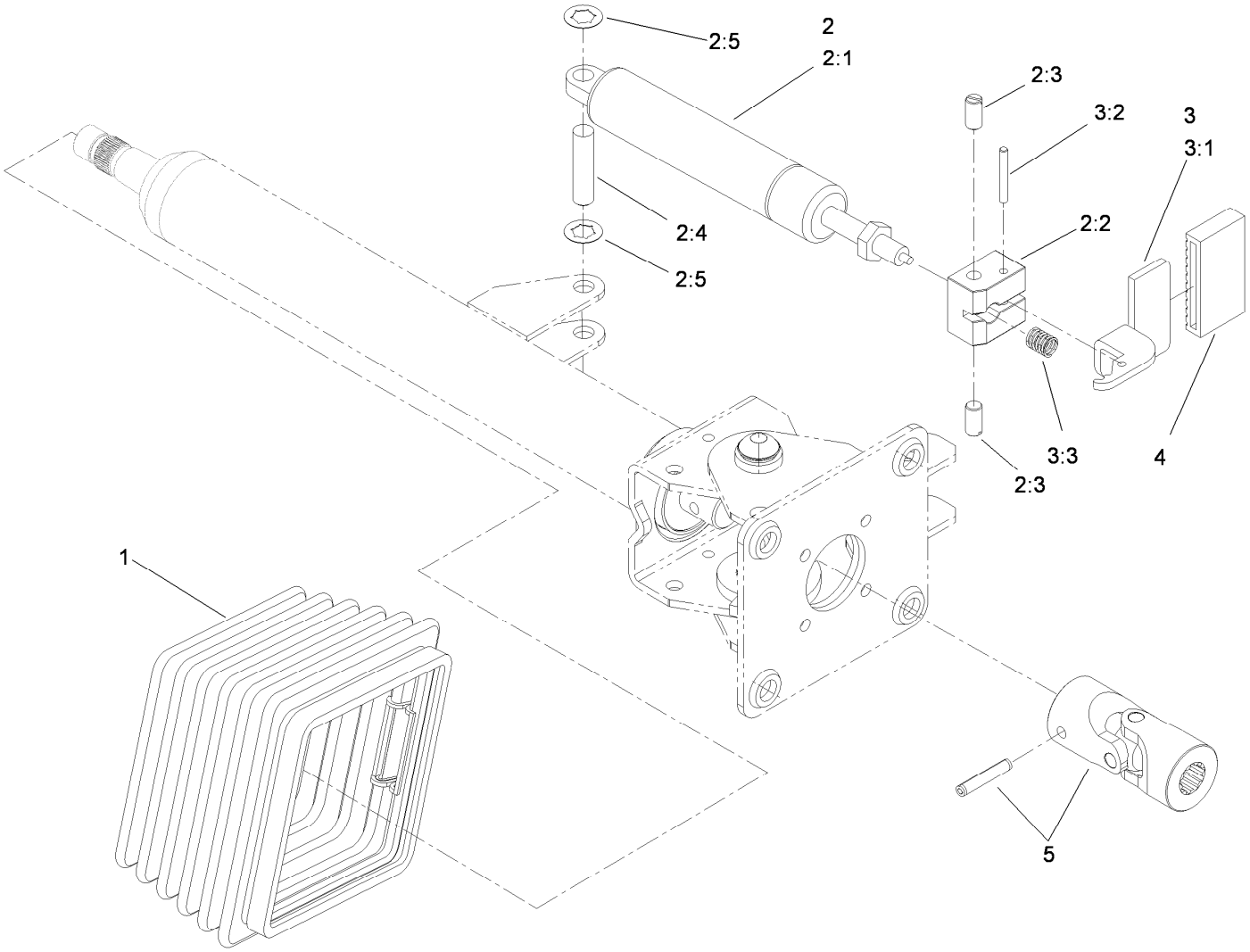

Steering Tilt Column Assembly No. 106-3622

Ref.	*Part Number*	*Qty.*	*Description*
1	110-6462	1	Bellows-Rubber
2	110-6463	1	Cylinder Service Kit
2:1		1	Cylinder-Gas ●
2:2		1	Block-Pedal ●
2:3		2	Bolt ●
2:4		1	Pin ●
2:5		2	Washer-Lock ●
3	110-6464	1	Pedal Service Kit
3:1		1	Pedal ●
3:2		1	Pin ●
3:3		1	Spring ●
4	110-6465	1	Cover-Pedal
5	120-6256	1	Universal Joint Kit

● Not serviced separately

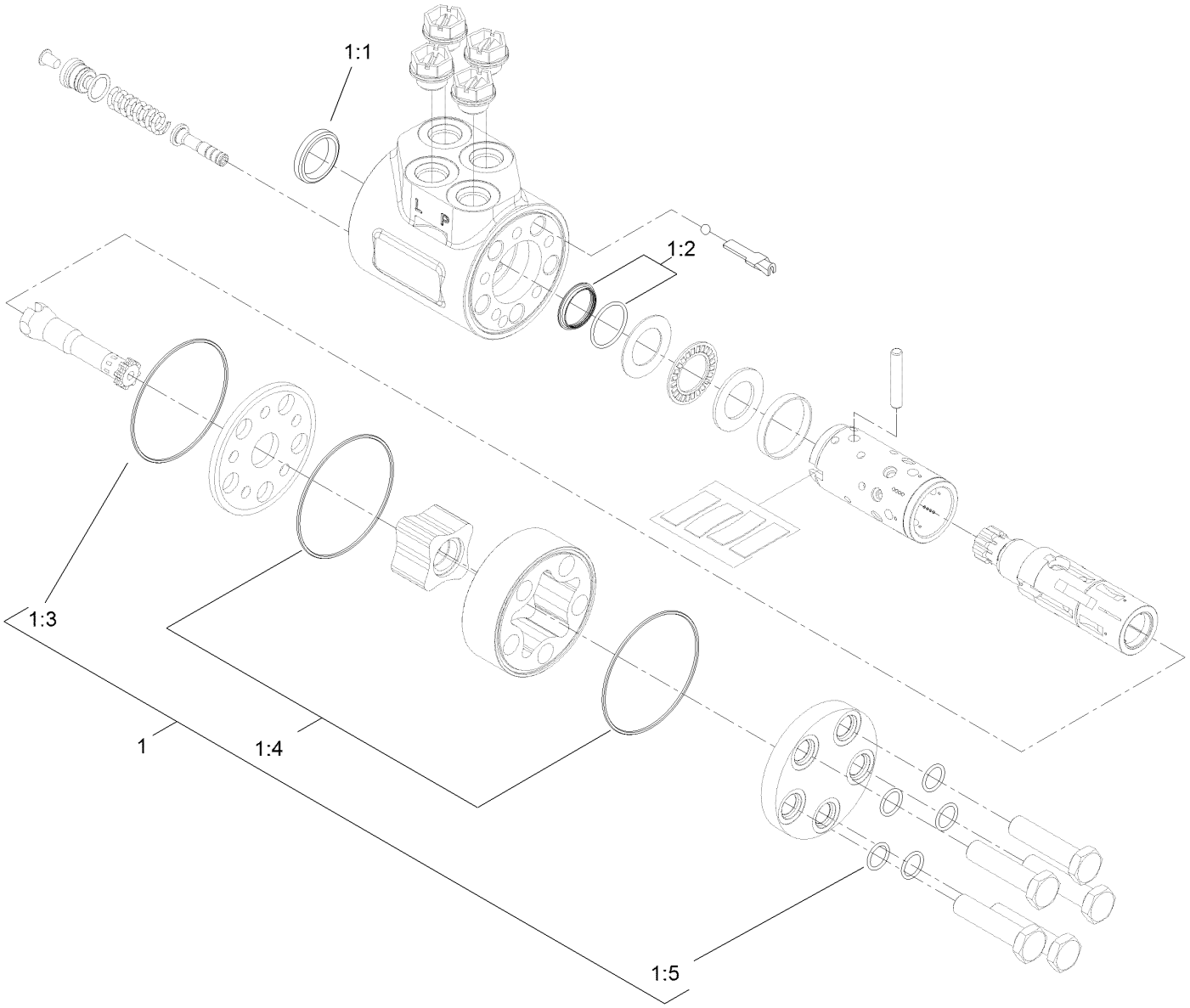

Steering Valve Assembly No. 106-3621

Ref.	*Part Number*	*Qty.*	*Description*
1	106-6716	1	Seal Kit
1:1		1	Ring-Seal, Dust ●
1:2		1	Seal-Shaft ●
1:3		1	O-Ring ●
1:4		2	O-Ring ●
1:5		5	O-Ring ●

● Not serviced separately

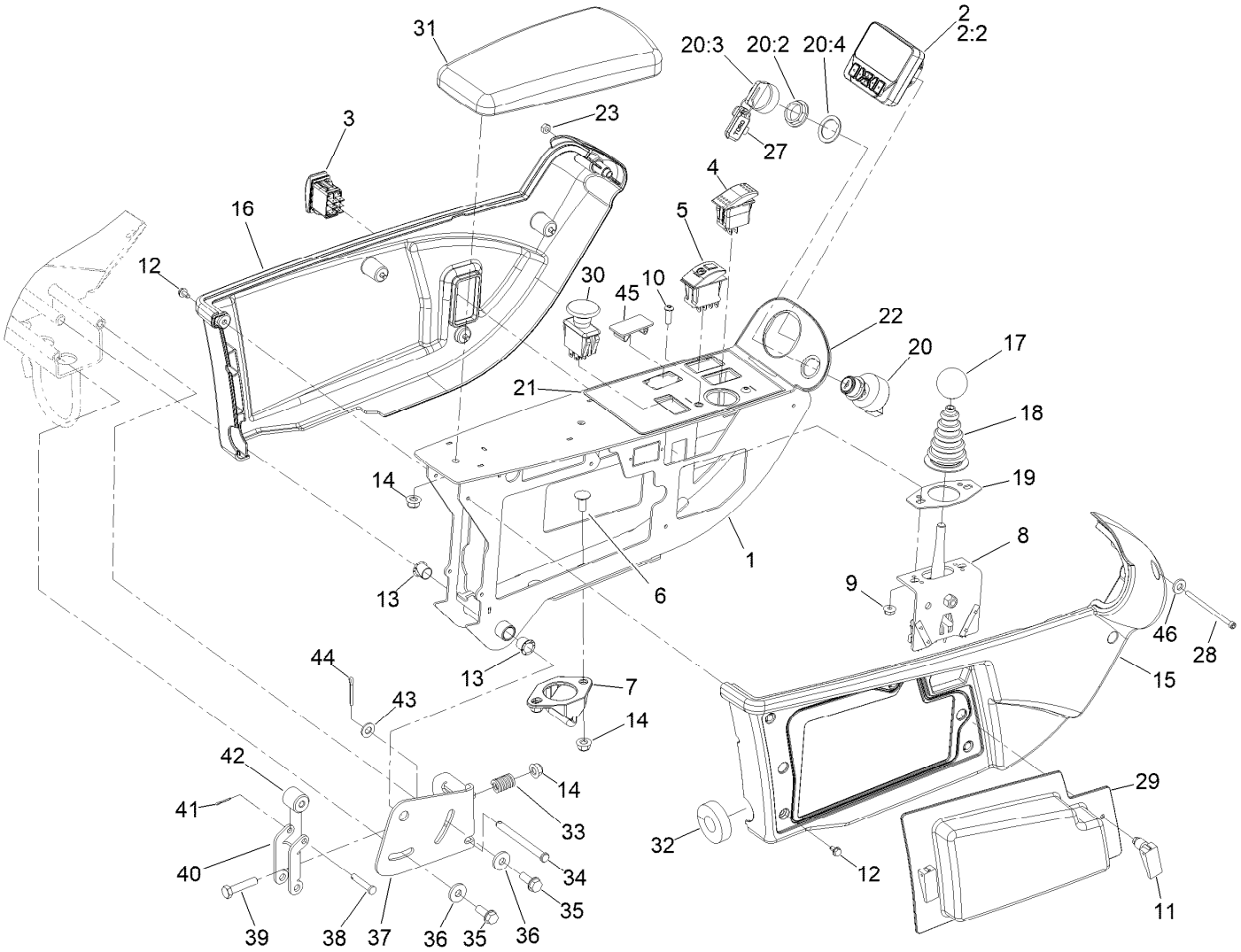

Control Panel Assembly

Ref.	Part Number	Qty.	Description
1	145-2474-03	1	Frame ASM, Control Arm [black]
2	161-1700	1	Display-LCD
2:2	161-1723	1	Nut-Display
3	95-8999	1	Switch-Rocker, On-None-On
4	114-3329	1	Switch-Rocker
5	111-2254	1	Switch-Rocker, On-None-On
6	3230-23	2	Bolt-CARR
7	125-1938	1	Latch
8	120-5280	1	Bracket-Joystick
9	104-7201	2	Nut-HF, NI
10	3274-69	2	Screw-HSBH
11	74-5950	2	Latch-Swell
12	104-2065	10	Screw-HWH
13	256-257	2	Bushing-Nyliner
14	104-8300	5	Nut-HF, NI
15	108-7605	1	Cover-RH
16	108-7604	1	Cover-LH
17	233-42	1	Knob

Ref.	Part Number	Qty.	Description
18	93-5961	1	Boot-Lever
19	112-9181	1	Plate-Boot
20	106-5269	1	Ignition Switch ASM
20:2	108-8660	1	Nut-Mounting
20:3	106-5270	1	Ignition Key Set
20:4	108-8659	1	Washer-Backup
21	145-2549	1	Decal-Control Panel
22	120-4158	1	Decal-Console, Upper
23	3296-2	1	Nut-Lock, NI
27	99-8970	1	Key-Latch, Hood
28	161-8374	1	Screw-HSH
29	114-0446	1	Panel-Access
30	93-9999	1	Switch-PTO
31	108-7602	1	Rest-Arm
32	145-2594	1	Seal-Foam
33	110-5331	1	Spring-Compression
34	283-88	1	Pin-Clevis
35	32144-41	2	Screw-Taptite
36	4-2390	2	Washer-Flat
37	110-5313-03	1	Bracket-Retainer
38	283-73	1	Pin-Clevis

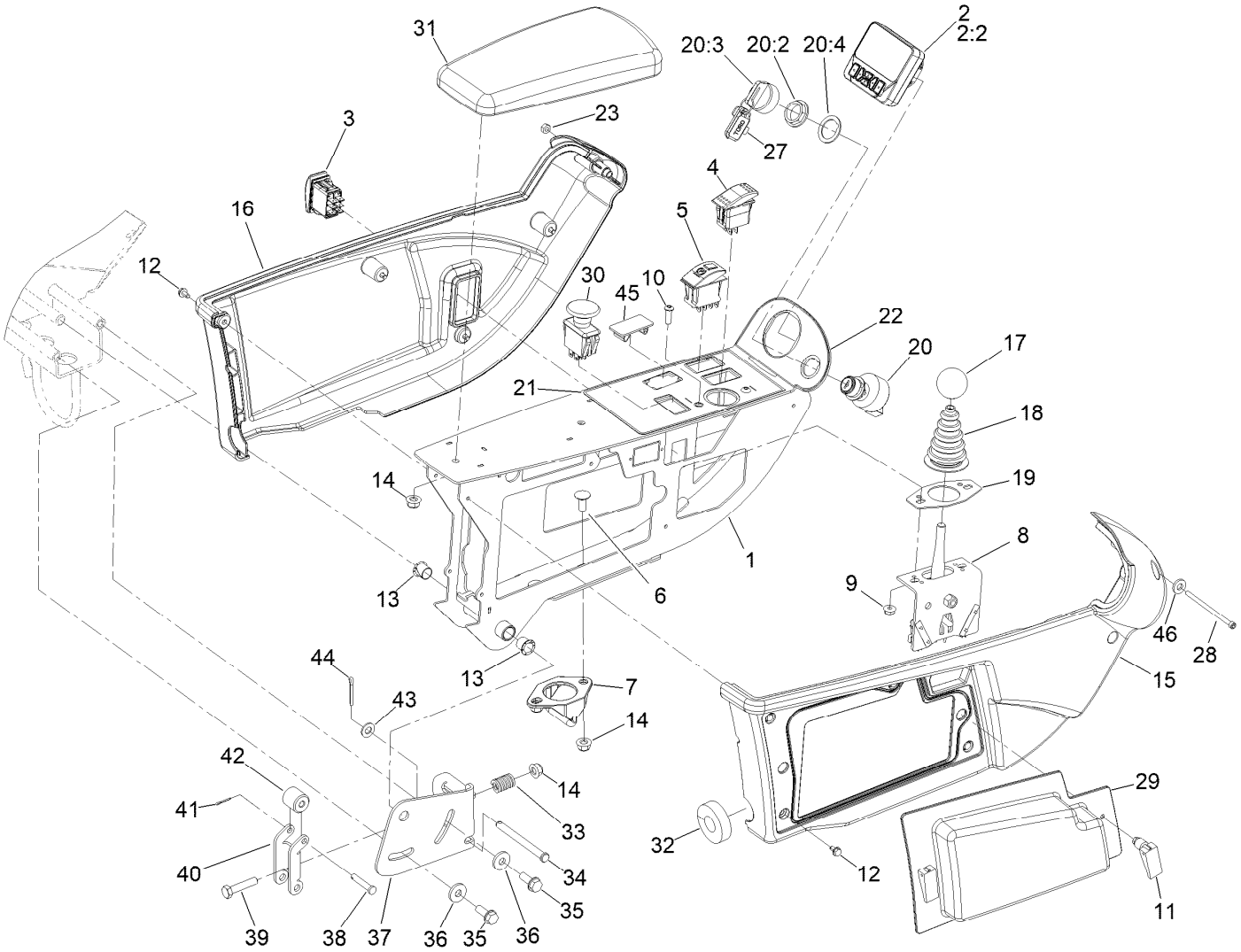

Control Panel Assembly (continued)

Ref.	Part Number	Qty.	Description
39	322-7	1	Screw-HH
40	110-5314	1	Latch
41	3272-1	1	Pin-Cotter
42	110-8856	1	Spacer
43	3256-23	1	Washer-Plain
44	3272-11	1	Pin-Cotter
45	100-1535	1	Switch-Rocker, (On)-Off-(On)
46	3256-51	1	Washer-Flat

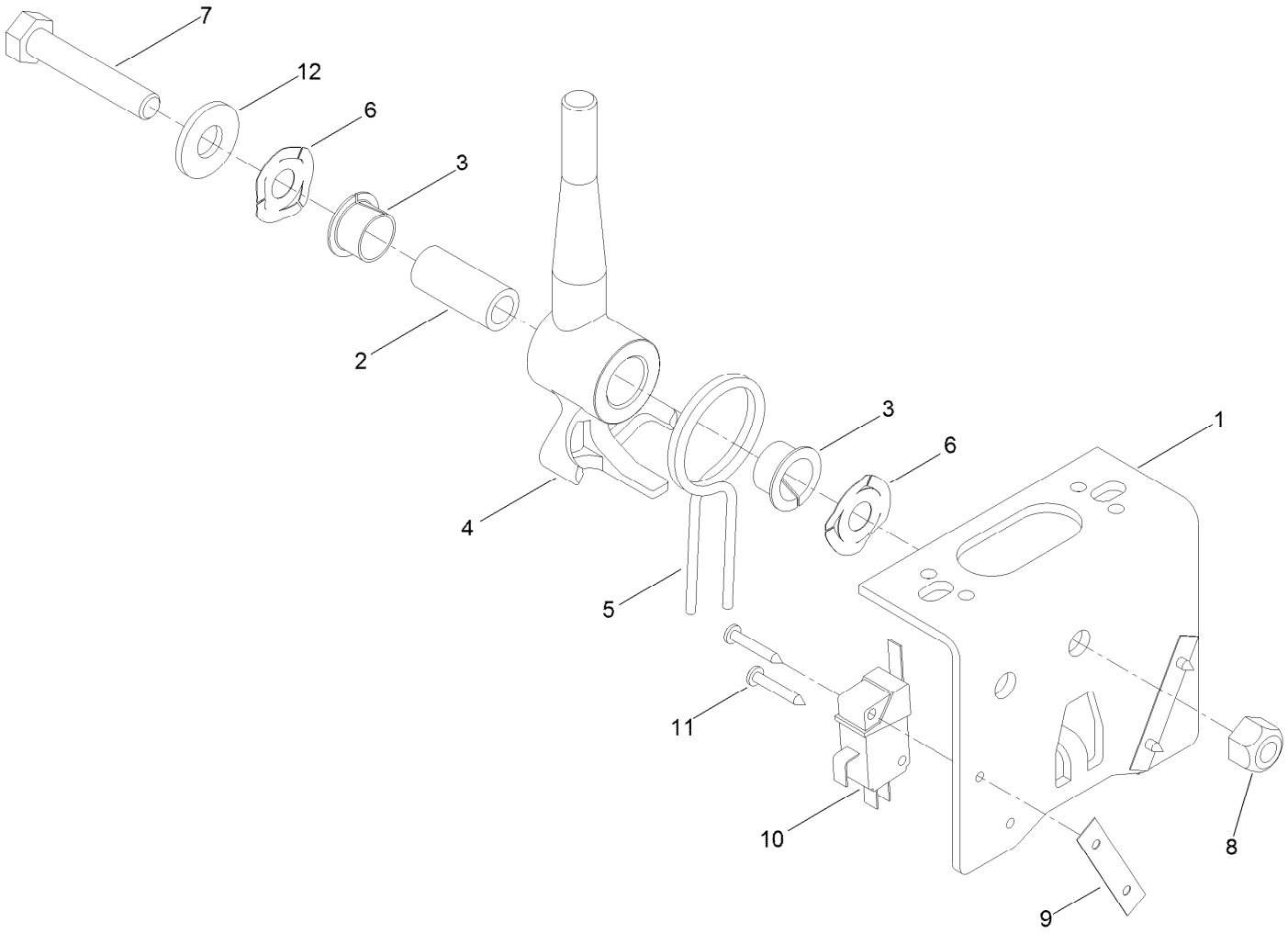

Joystick Bracket Assembly No. 120-5280

Ref.	*Part Number*	*Qty.*	*Description*
1	115-5357-03	1	Bracket-Joystick
2	106-4192	1	Spacer
3	93-5547	2	Bushing-Nylon
4	119-3540	1	Hub-Pivot, Joystick
5	105-8289	1	Spring-Torsion
6	106-4193	2	Washer-Finger, Spring
7	322-9	1	Screw-HH
8	3296-29	1	Nut-Lock, NI
9	3290-354	2	Nut-Speed
10	108-6496	2	Switch (W/Boot)
11	95-3003	4	Screw-PPHTF
12	3256-3	1	Washer-Flat

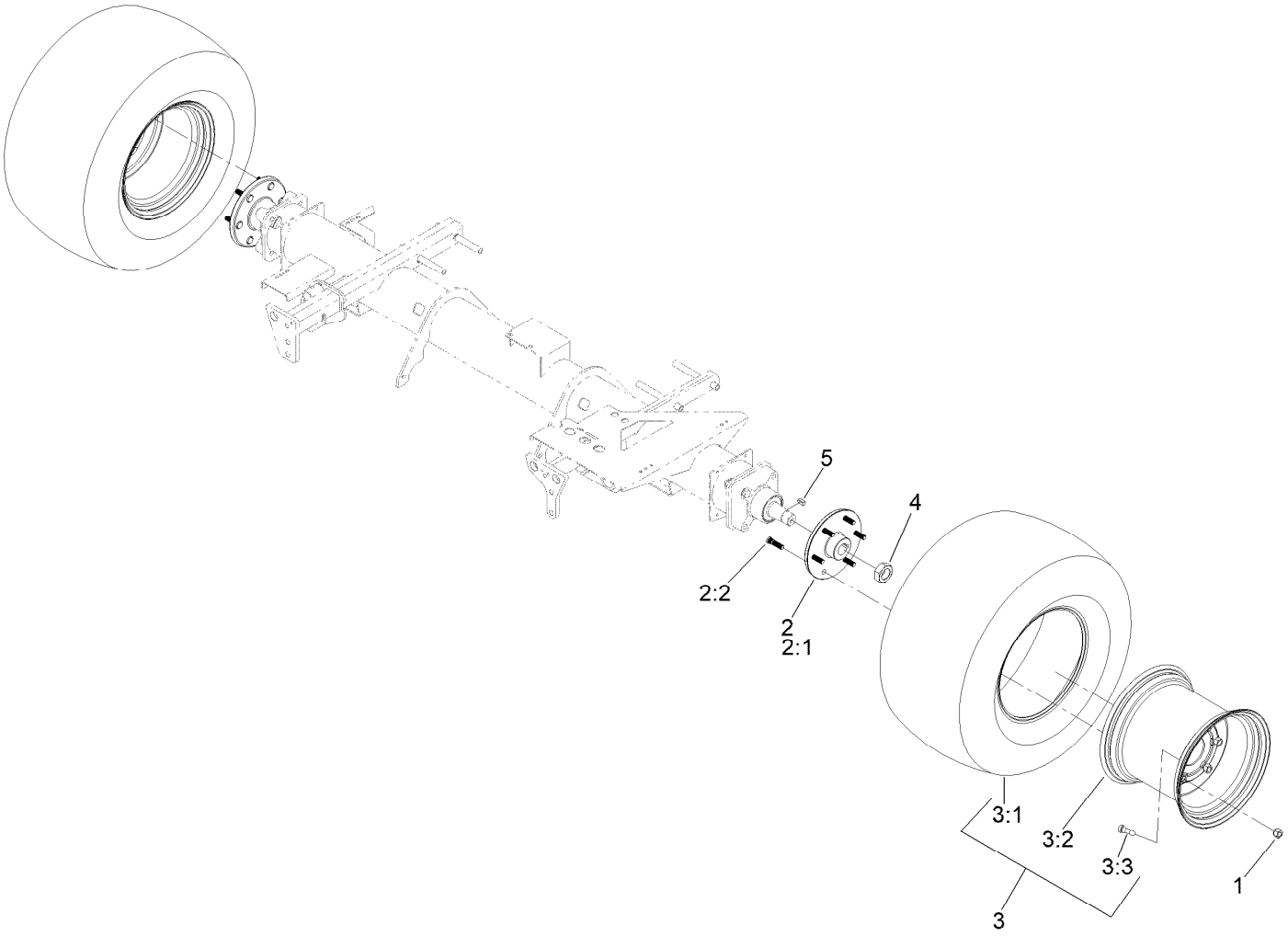

Front Axle Assembly

Ref.	*Part Number*	*Qty.*	*Description*
1	139-2564	12	Nut-Lug
2	144-2058	2	Hub ASM (1.50)
2:1	136-7971	1	Hub-Wheel
2:2	114-3918	6	Stud-Wheel
3	139-6048	2	Tire ASM
3:1	133-2724	1	Tire
3:2	139-6049	1	Wheel
3:3	232-27	1	Stem-Valve
4	117-3290	2	Nut-Hex
5	117-5198	2	Key-Square

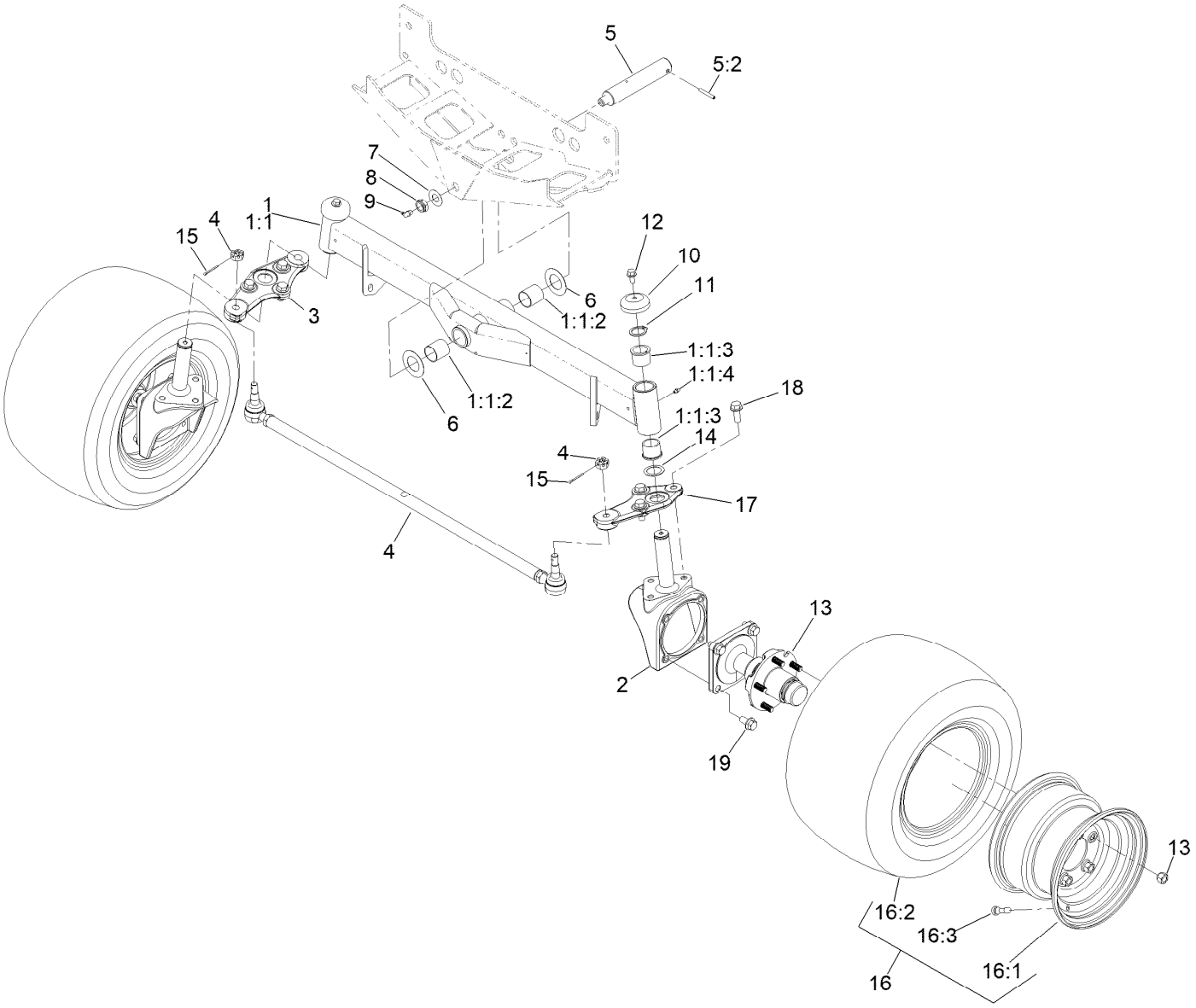

Rear Axle Assembly

Ref.	Part Number	Qty.	Description
1	107-4546-03	1	Axle ASM
1:1		1	Axle ●
1:1:2	99-6964	2	Bushing-Axle
1:1:3	104-0015	4	Bushing-Flange
1:1:4	302-5	2	Fitting-Grease
2	161-5128	2	Housing-Motor
3	140-3142	1	Link-Drag, RH
4	139-6029	1	Tie Rod ASM
5	140-6101	1	Pin ASM-Axle Pivot
5:2	32121-32	1	Pin-Roll
6	99-8432	2	Washer-Thrust
7	71-4540	1	Washer-Thrust
8	3296-15	1	Nut-Lock, NI
9	302-33	1	Fitting-Grease

Ref.	Part Number	Qty.	Description
10	69-8890	2	Cap-Spindle
11	32151-77	2	Ring-Retaining, External
12	3234-1	2	Screw-HHF
13	117-8961	2	Hub And Spindle ASM
14	76-2980	2	Washer-Thrust
15	3272-12	2	Pin-Cotter
16	117-0281	2	Rim And Tire ASM
16:1	117-0280	1	Rim
16:2	117-5125	1	Tire
16:3	232-27	1	Stem-Valve
17	140-3144	1	Link-Drag, LH
18	3234-38	6	Screw-HHF
19	3234-6	8	Screw-HHF

● Not serviced separately

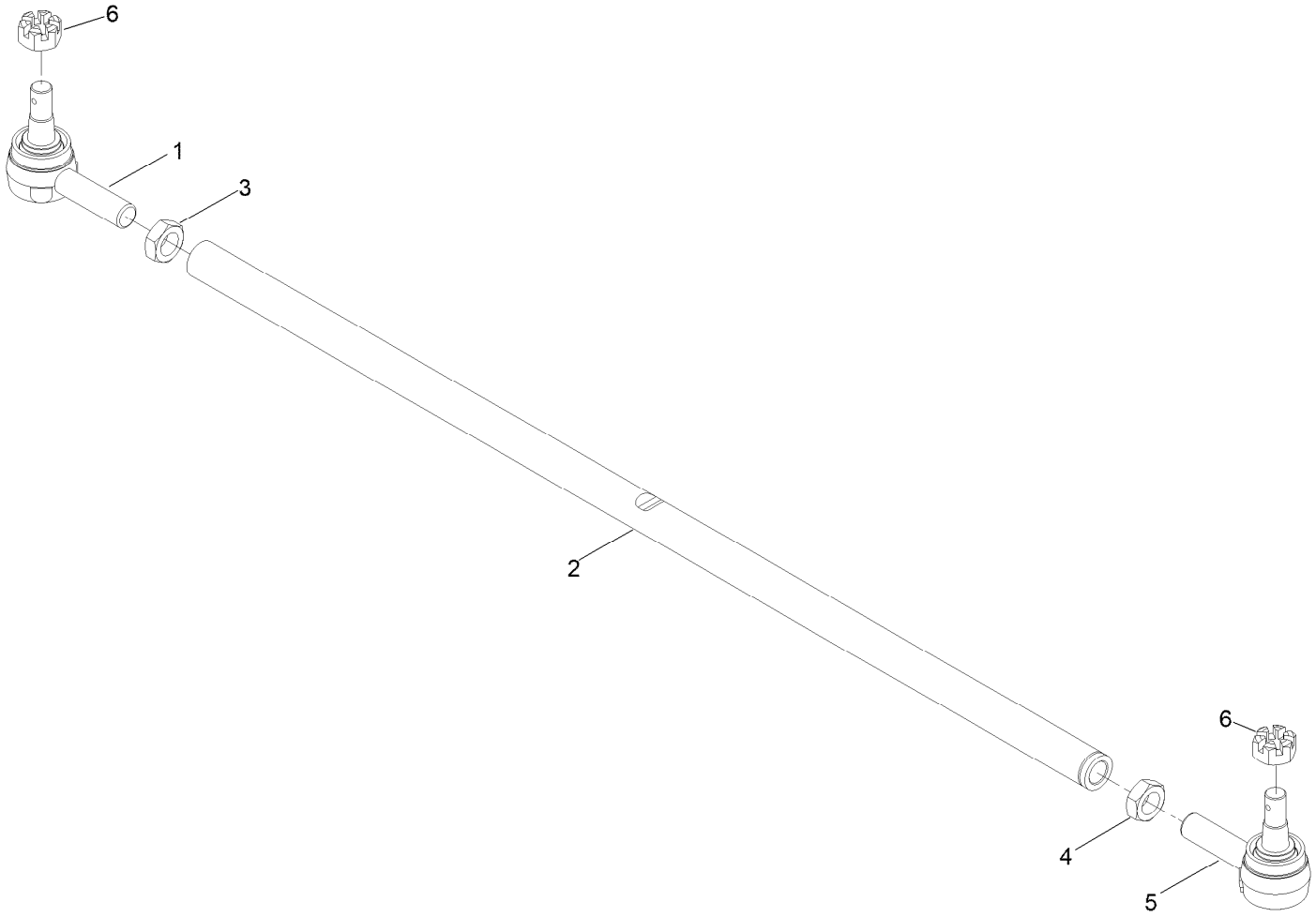

Tie Rod Assembly No. 139-6029

Ref.	*Part Number*	*Qty.*	*Description*
1	144-3901	1	Tie Rod End
2	139-6030	1	Rod-Tie
3	84-5300	1	Nut-Jam
4	110-5337	1	Nut-Jam
5	144-3902	1	Tie Rod End
6	140-6135	2	Nut-Hex, Slotted

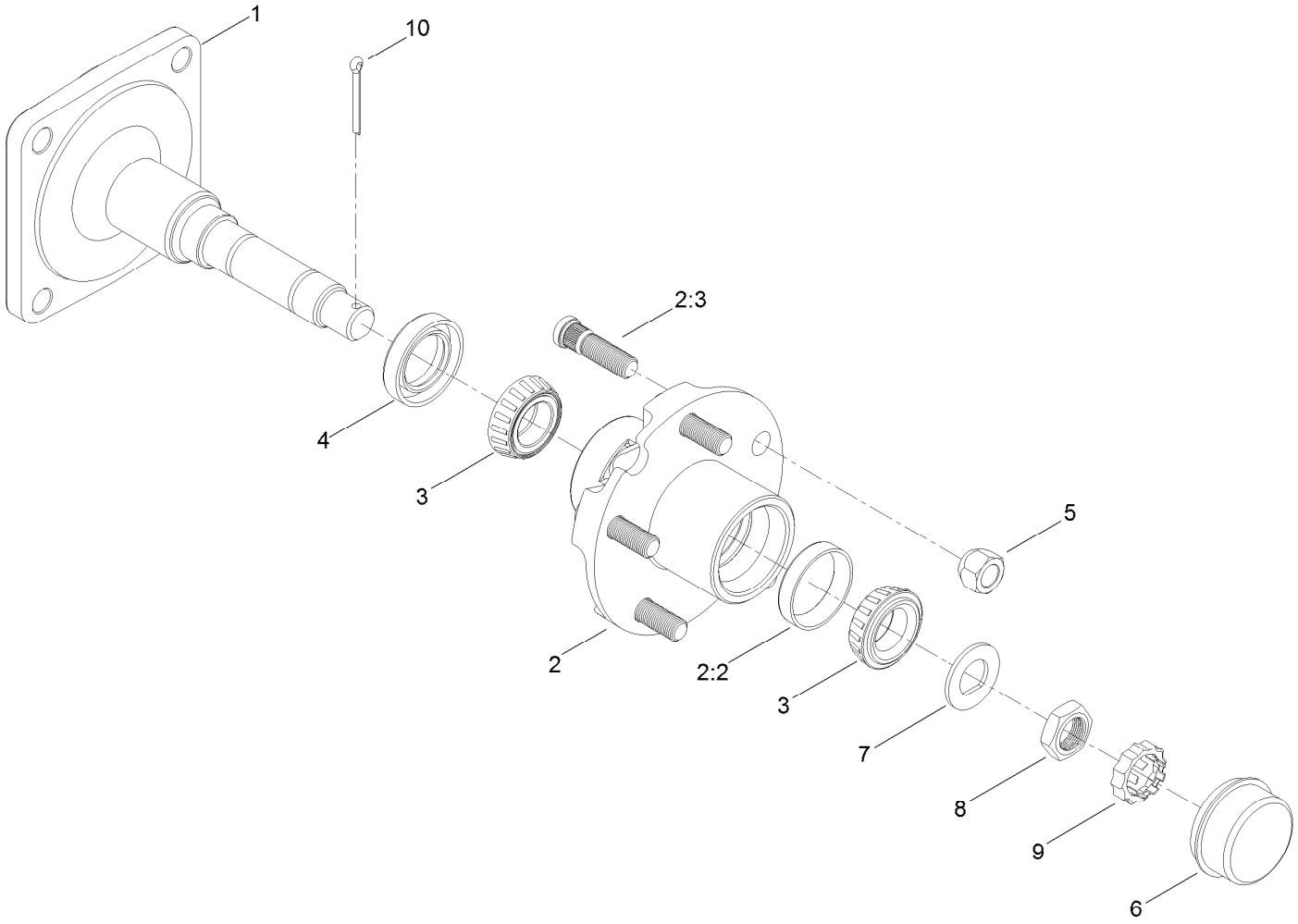

Hub and Spindle Assembly No. 117-8961

Ref.	*Part Number*	*Qty.*	*Description*
1	117-8958	1	Spindle
2	117-8963	1	Hub ASM
2:2	254-72	2	Bearing-Cup, Tapered
2:3	114-3918	5	Stud-Wheel
3	254-94	2	Bearing-Cone, Tapered
4	112-1690	1	Seal-Oil
5	139-2564	5	Nut-Lug
6	241-119	1	Cap-Dust
7	117-8259	1	Washer-Spindle
8	117-8260	1	Nut
9	93-0307	1	Nut-Lock, Retainer
10	3272-18	1	Pin-Cotter

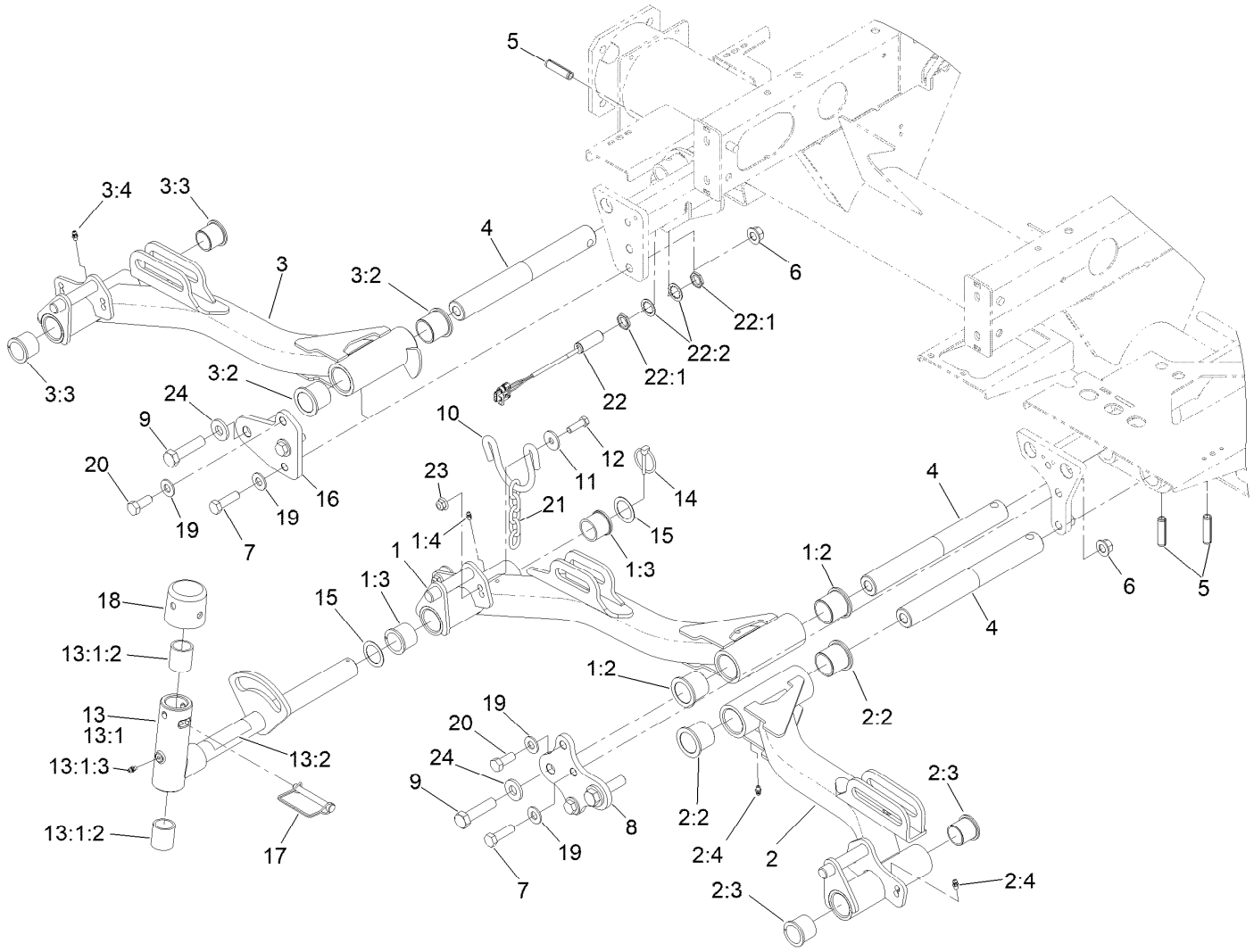

No. 1, 4 and 5 Lift Arm Assembly

Ref.	Part Number	Qty.	Description
1	133-2911	1	Lift Arm ASM #1
1:2	69-6470	2	Bushing-Caster
1:3	104-0015	2	Bushing-Flange
1:4	302-5	2	Fitting-Grease
2	133-2914	1	Lift Arm ASM #4
2:2	69-6470	2	Bushing-Caster
2:3	104-0015	2	Bushing-Flange
2:4	302-5	2	Fitting-Grease
3	133-2915	1	Lift Arm ASM #5
3:2	69-6470	2	Bushing-Caster
3:3	104-0015	2	Bushing-Flange
3:4	302-5	2	Fitting-Grease
4	117-0208	3	Shaft-Pivot, Liftarm
5	32121-122	3	Pin-Roll
6	99-5107	4	Nut-HF Nylock
7	325-7	4	Screw-HH
8	117-5154-01	1	Plate-Bridge 1 And 4
9	327-7	3	Screw-HH

Ref.	Part Number	Qty.	Description
10	110-0922	3	Hoop-Chain
11	63-8410	6	Washer
12	323-7	6	Screw-HH
13	138-1248	3	Pivot Yoke ASM
13:1		1	Yoke-Pivot ●
13:1:2	121-3187	2	Bushing
13:1:3	302-5	1	Fitting-Grease
13:2	110-9642	1	Decal-Warning
14	92-1298	3	Pin-Lynch
15	76-2980	6	Washer-Thrust
16	117-5153-01	1	Plate-Bridge 5
17	107-7400	3	Pin-Lynch
18	107-4027	3	Cap
19	87-7270	6	Washer-Thrust
20	325-5	2	Screw-HH
21	84-2451	3	Chain-Straight, 5 Link
22	115-5300	1	Proximity Switch ASM
22:1	117-3207	2	Nut-Hex

● Not serviced separately

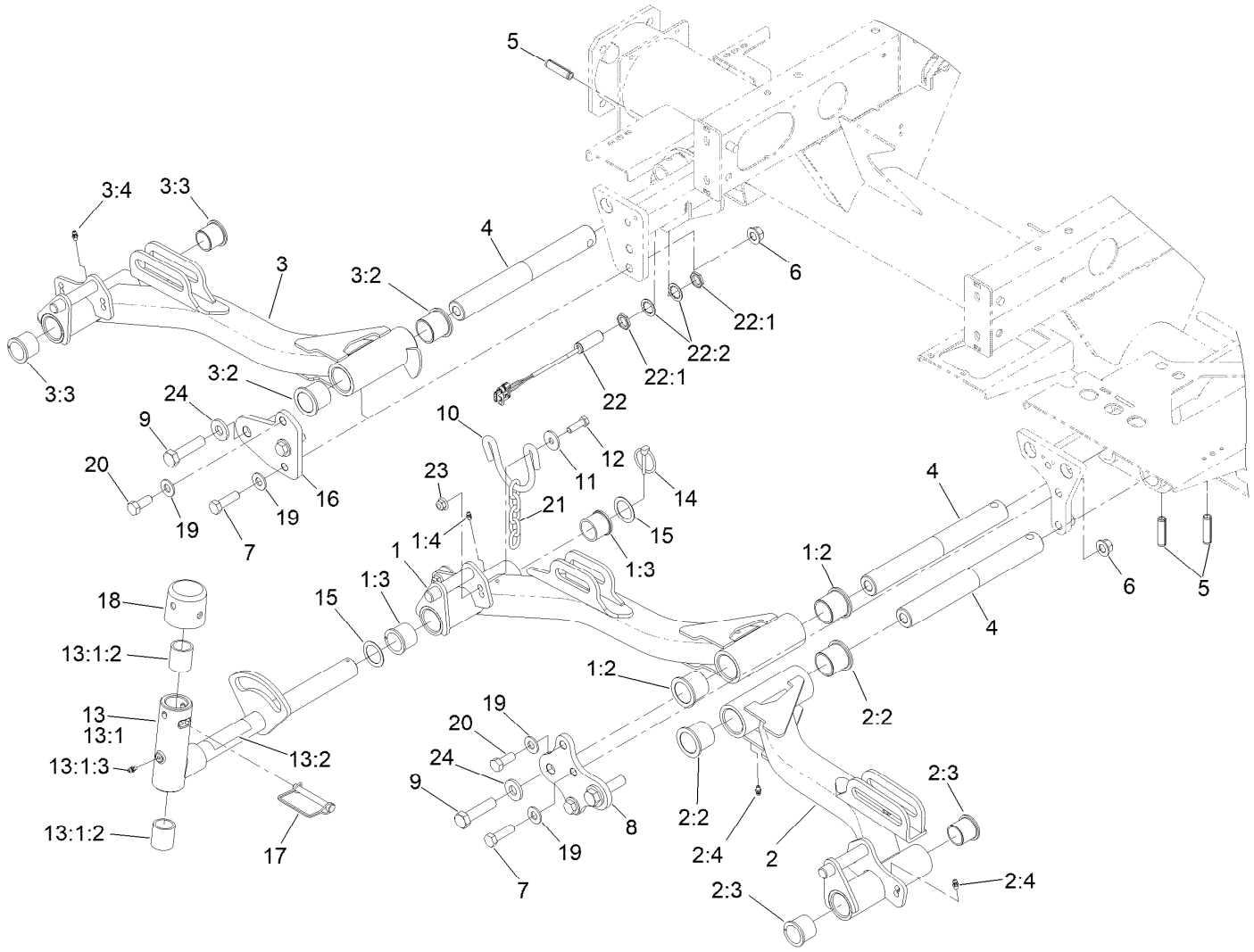

No. 1, 4 and 5 Lift Arm Assembly (continued)

Ref.	Part Number	Qty.	Description
22:2	117-3208	2	Washer-Lock, Internal Tooth

Ref.	Part Number	Qty.	Description
23	104-8301	6	Nut-HF, NI
24	99-7667	3	Washer-Flat

● Not serviced separately

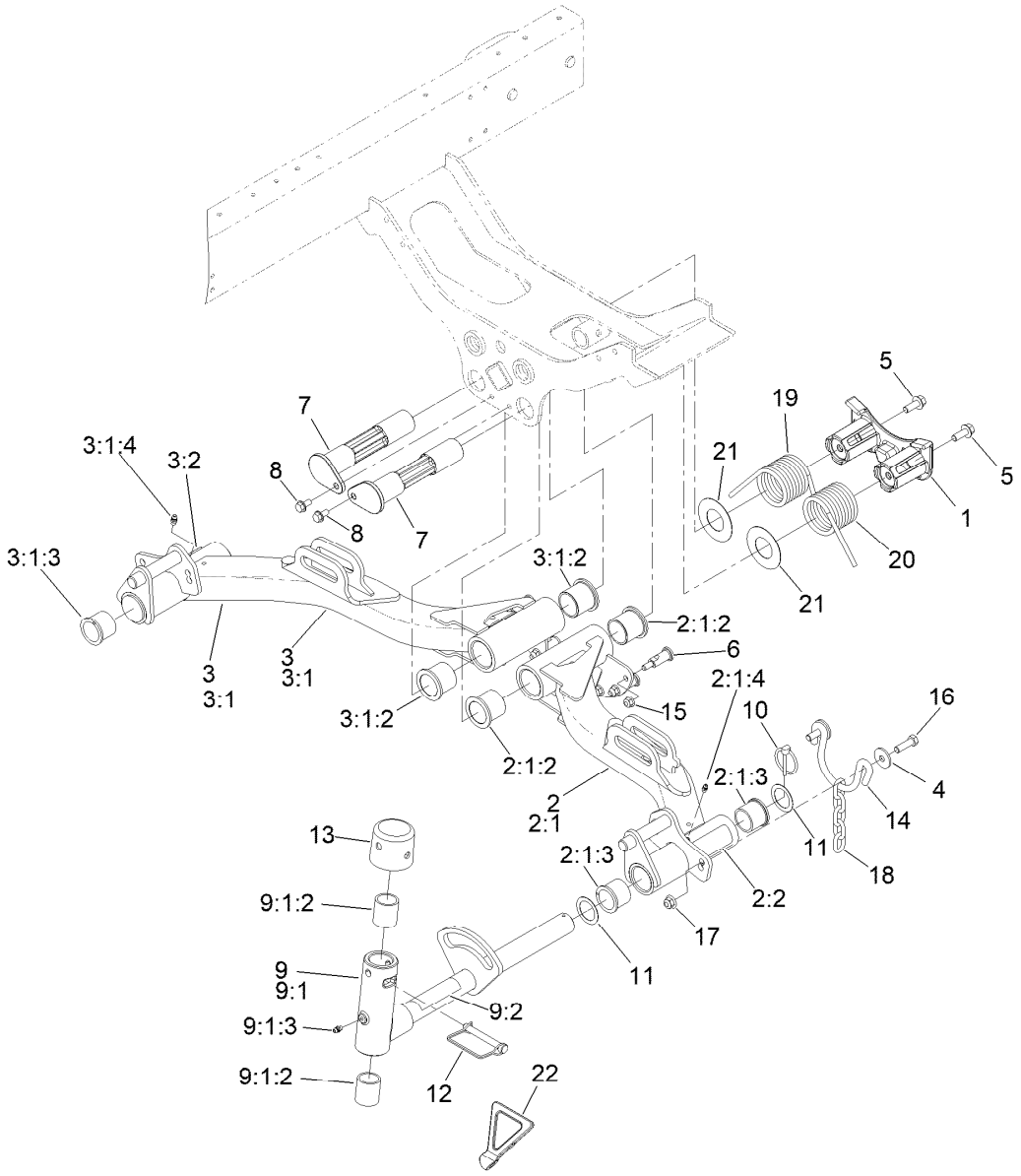

No. 2 and 3 Lift Arm Assembly

Ref.	Part Number	Qty.	Description
1	125-2018	1	Housing
2	136-8002	1	Lift Arm #2
2:1		1	Lift Arm ASM #2 ●
2:1:2	69-6470	2	Bushing-Caster
2:1:3	104-0015	2	Bushing-Flange
2:1:4	302-5	2	Fitting-Grease
2:2	93-6696	1	Decal-Warning
3	136-8003	1	Lift Arm #3
3:1		1	Lift Arm ASM #3 ●
3:1:2	69-6470	2	Bushing-Caster
3:1:3	104-0015	2	Bushing-Flange
3:1:4	302-5	2	Fitting-Grease
3:2	93-6696	1	Decal-Warning
4	63-8410	4	Washer
5	3234-11	2	Screw-HHF
6	120-6283	6	Stud-Shouldered
7	125-2037	2	Shaft
8	32144-14	2	Screw-HWHTF

Ref.	Part Number	Qty.	Description
9	138-1248	2	Pivot Yoke ASM
9:1		1	Yoke-Pivot ●
9:1:2	121-3187	2	Bushing
9:1:3	302-5	1	Fitting-Grease
9:2	110-9642	1	Decal-Warning
10	92-1298	2	Pin-Lynch
11	76-2980	4	Washer-Thrust
12	107-7400	2	Pin-Lynch
13	107-4027	2	Cap
14	110-0922	2	Hoop-Chain
15	104-8300	6	Nut-HF, NI
16	323-7	4	Screw-HH
17	104-8301	4	Nut-HF, NI
18	84-2451	2	Chain-Straight, 5 Link
19	99-5608-03	1	Spring-Torsion, RH
20	99-5609-03	1	Spring-Torsion, LH
21	110-5345	2	Washer
22	119-8010-03	1	Kickstand

● Not serviced separately

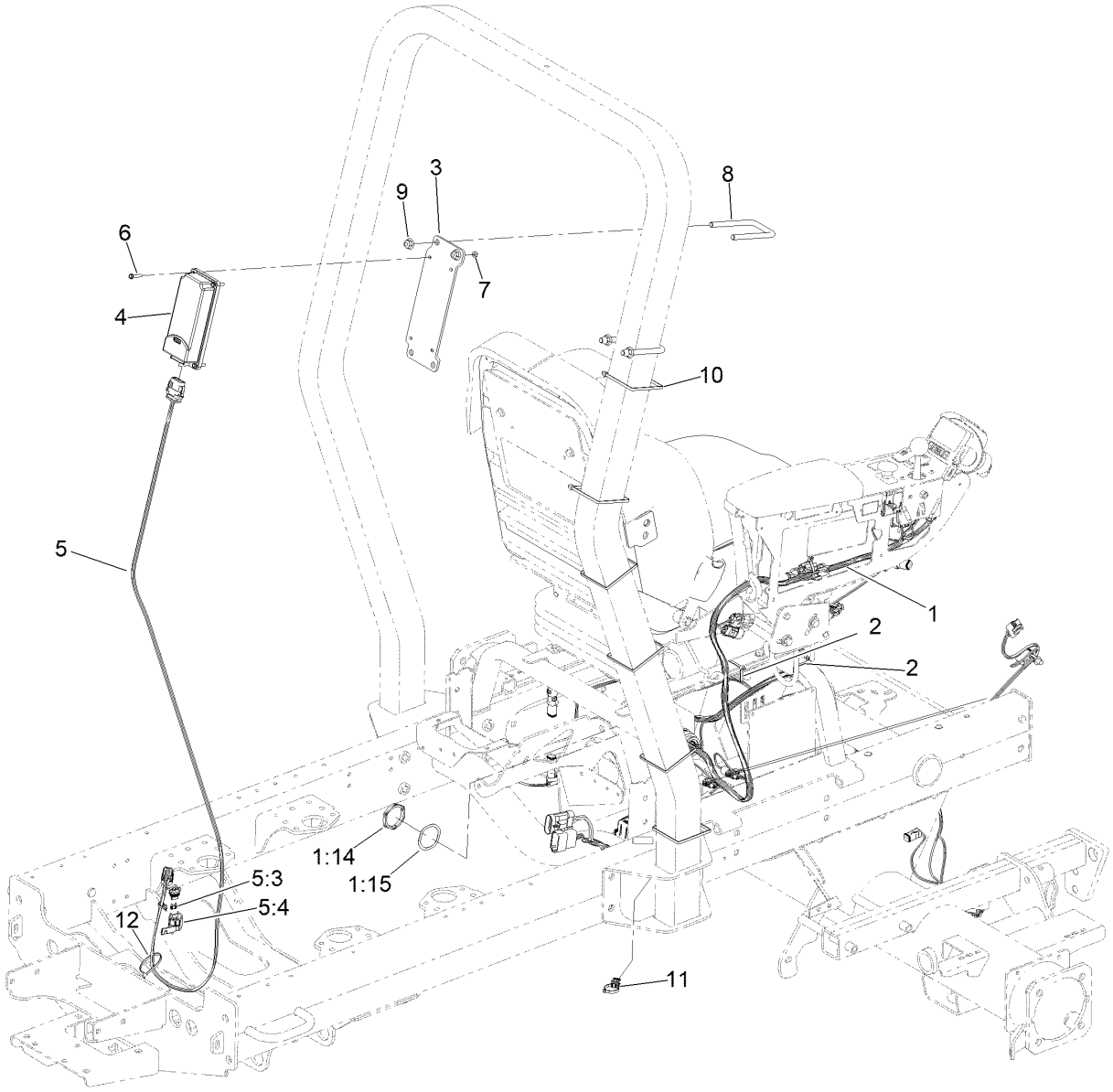

Seat and Control Arm Wiring Harness Assembly

Ref.	Part Number	Qty.	Description
1	122-2126	1	Harness-Wire, Seat
1:14	32180-135	1	Nut-Connector
1:15	32180-143	1	Washer-Lock
2	3290-378	2	Tie-Cable
3	161-8398-03	1	Bracket-Hmu Mouting
4	161-9001	1	Gateway-Telematics
5	122-2163	1	Harness-Wire
5:3	121-8861	1	Fuse-Mini Blade, 2 Amp
5:4	32180-101	1	Cover-Fuse, Single
6	131-6456	4	Screw-HWH
7	3296-2	4	Nut-Lock, NI
8	138-8991	2	U-Bolt-Sq
9	104-8301	4	Nut-HF, NI
10	3290-379	6	Tie-Cable
11	32180-078	1	Clip-Edge
12	3290-378	2	Tie-Cable

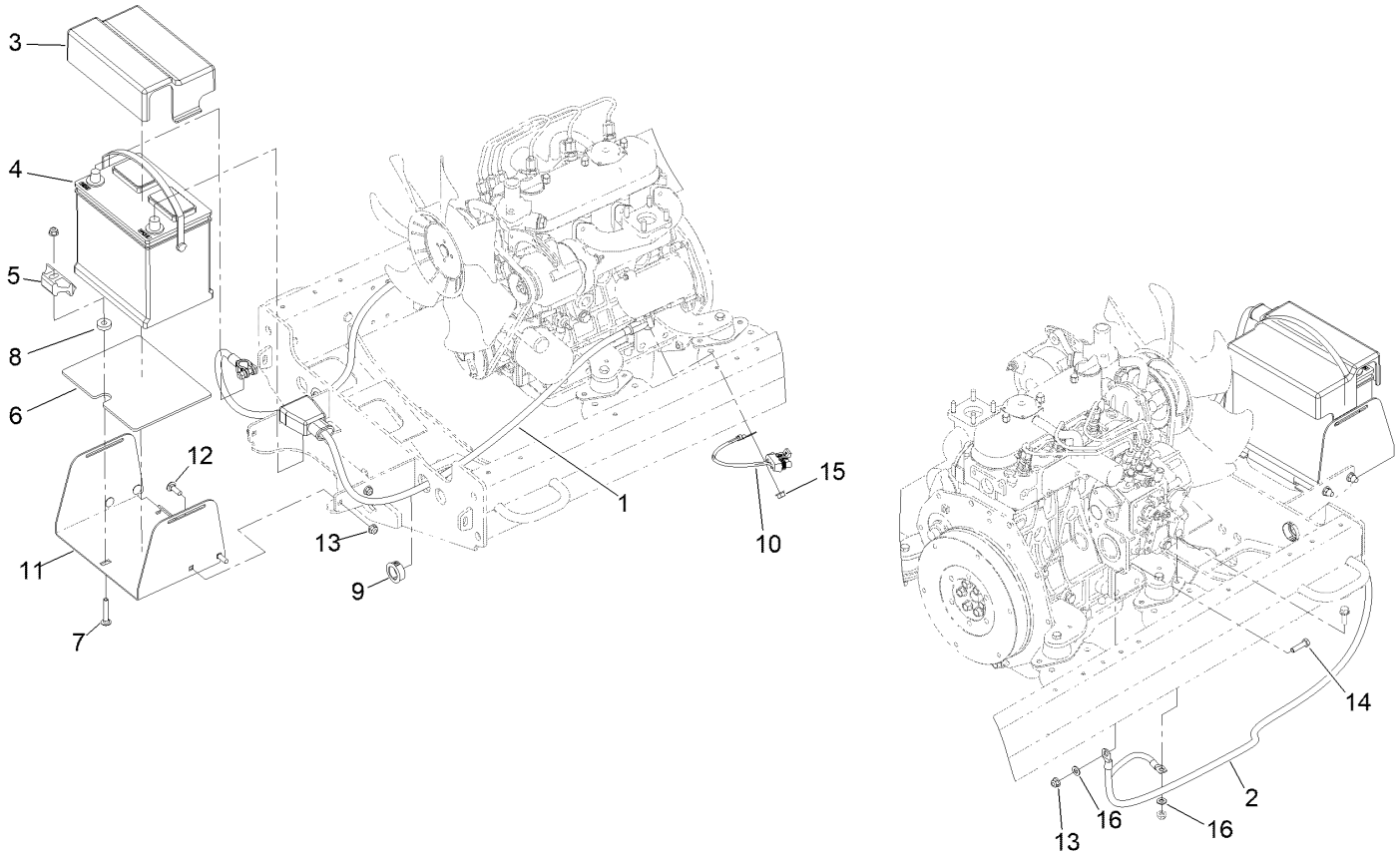

Battery Electrical Assembly

Ref.	Part Number	Qty.	Description
1	120-6398	1	Cable-Battery, Positive
2	120-6399	1	Cable-Battery, Negative
3	121-5615	1	Cover-Battery
4	132-8621	1	Battery - Corrosive
5	138-6335	1	Retainer-Battery
6	127-2781	1	Mat-Battery
7	3230-6	1	Bolt-CARR
8	62-6660	1	Spacer

Ref.	Part Number	Qty.	Description
9	32180-570	2	Bushing-Panel Snap,1.00"
10	99-3441	1	Harness-Wire, Fusible Link
11	125-1583-03	1	Tray-Battery
12	3230-2	4	Bolt-CARR
13	104-8300	6	Nut-HF, NI
14	322-6	1	Screw-HH
15	33004-00	1	Nut-HF
16	120-9683	2	Washer-Plain

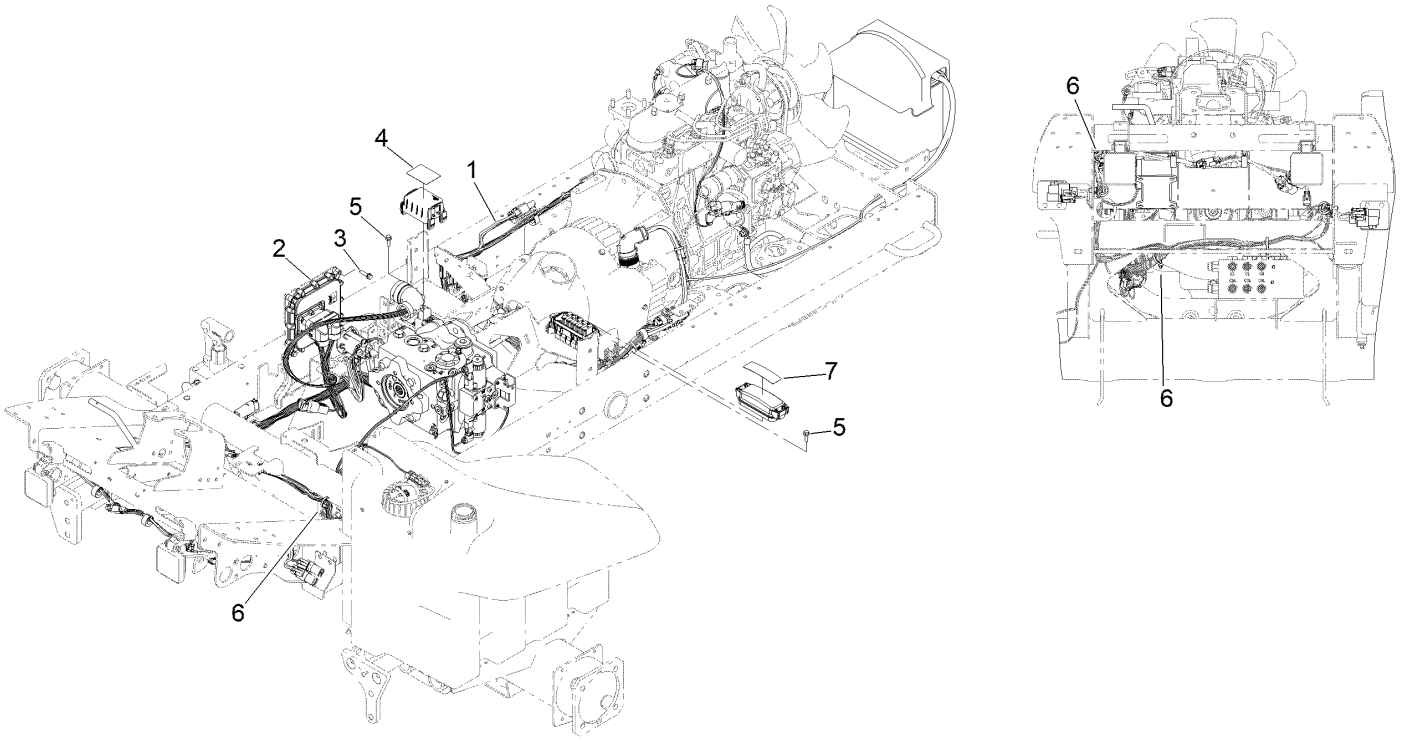

Electrical Assembly

Ref.	*Part Number*	*Qty.*	*Description*
1	122-2913	1	Harness-Wire, Main
2	127-2770	1	Controller
3	32144-86	4	Screw-HWHTF
4	145-2498	1	Decal-Fuse
5	33103-020	4	Screw-HHF
6	3290-378	3	Tie-Cable
7	127-2470	1	Decal-Fuses, Cu

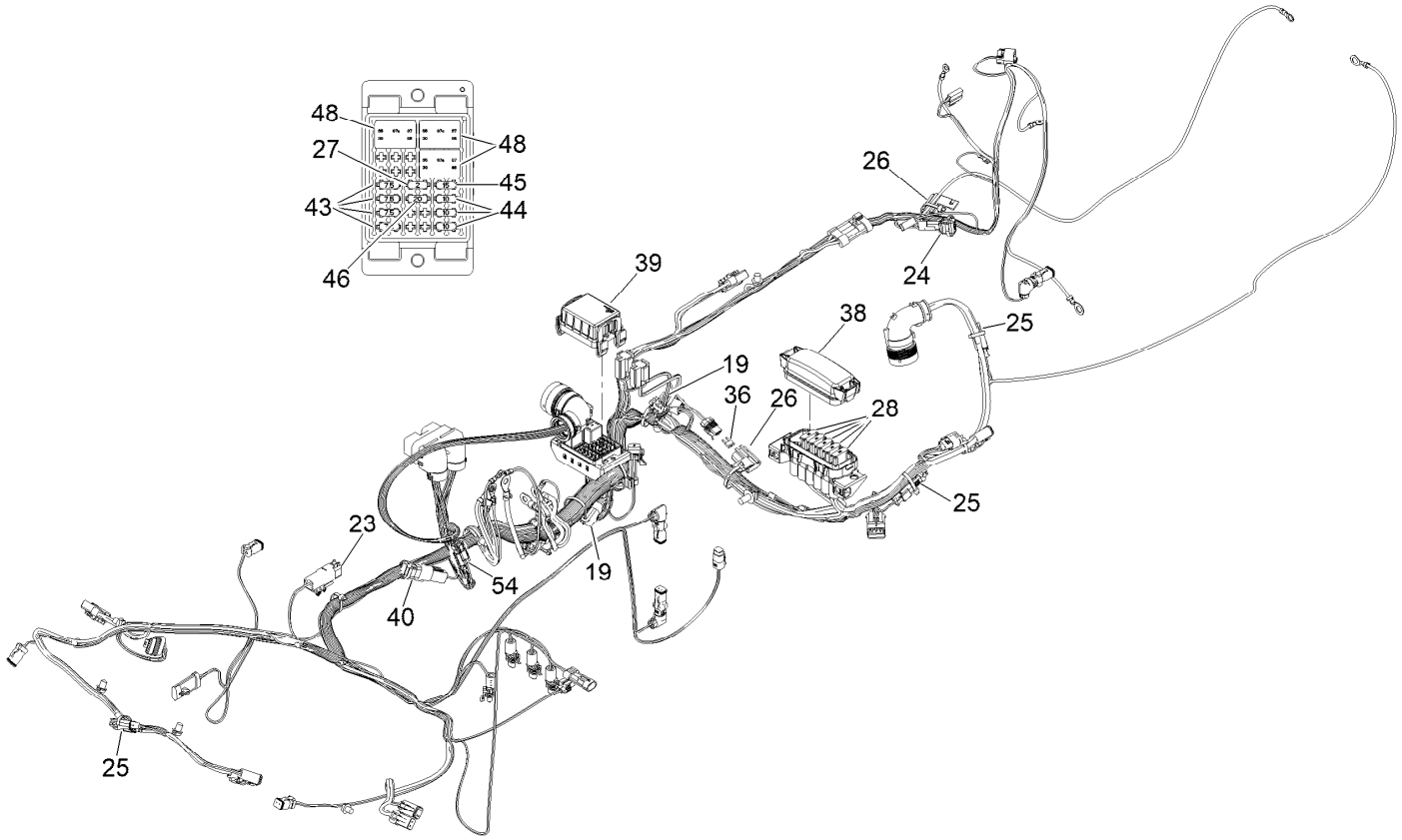

Wire Harness Assembly No. 122-2913

Ref.	*Part Number*	*Qty.*	*Description*
19	32180-156	3	Cap-Plug, 6 Way
23	119-7781	1	Diode-Sealed
24	100-4918	1	Diode
25	32180-282	3	Conn, Res, 120 Ohm
26	32180-019	2	Cover-Fuse, Single
27	121-8861	1	Fuse-Mini Blade, 2 Amp
28	122-0255	5	Fuse-Maxi, 35 Amp-58V
36	122-0409	1	Fuse-Mini Blade, 10 Amp
38	32180-146	1	Cover-Fuse

Ref.	*Part Number*	*Qty.*	*Description*
39	32180-471	1	Cover-Chief, Bric
40	122-1131	1	Conn, Capacitor-Sealed
43	121-8865	4	Fuse-Mini Blade, 7.5 Amp
44	121-8866	3	Fuse-Mini Blade, 10 Amp
45	121-8867	1	Fuse-Mini Blade, 15 Amp
46	121-8868	1	Fuse-Mini Blade, 20 Amp
48	122-0368	3	Relay-280 ISO
54	32180-091	1	Cap-Dust, 2 Way

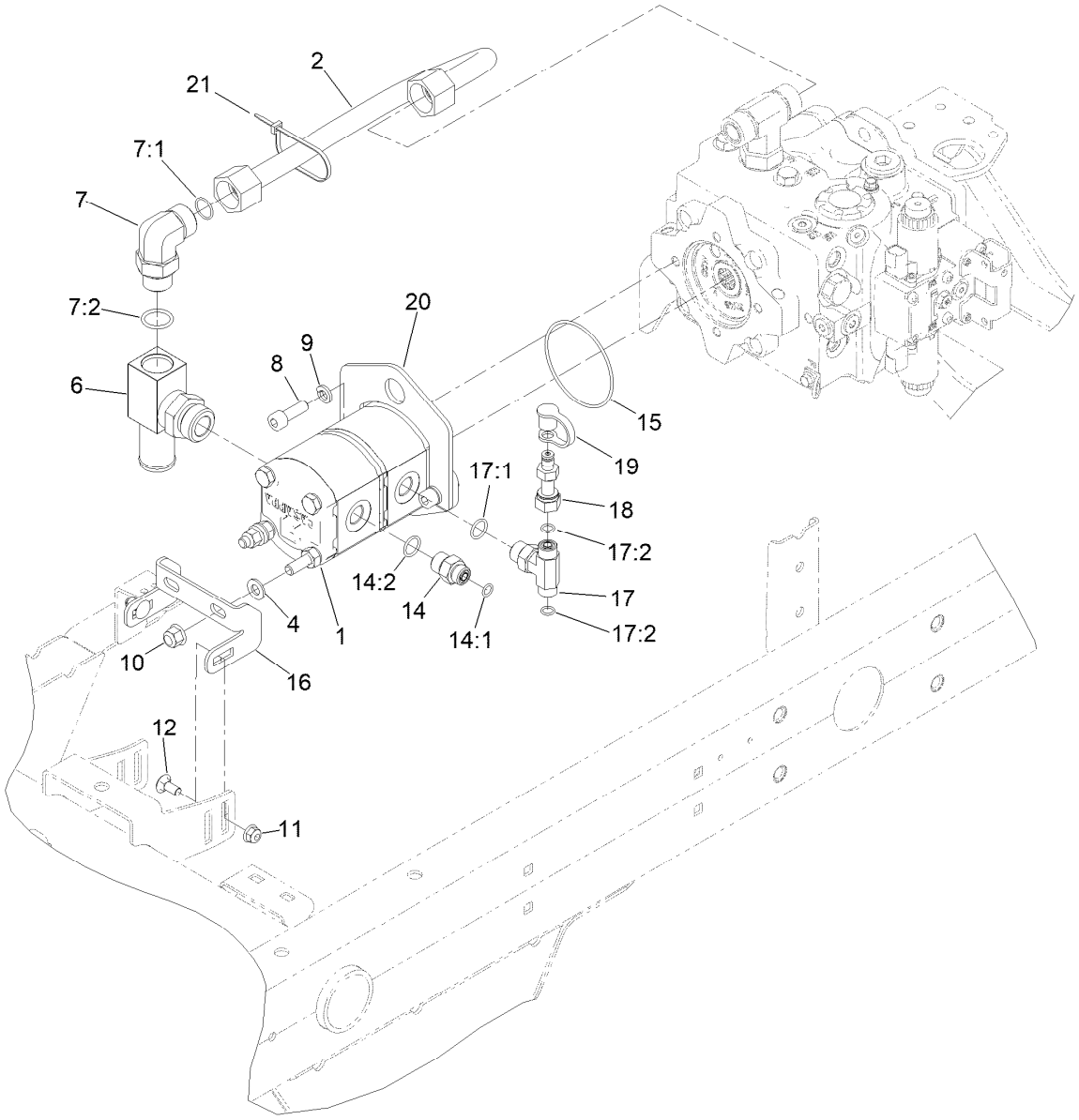

Gear Pump Assembly

Ref.	Part Number	Qty.	Description
1	125-1530	1	Tandem Gear Pump ASM
2	145-2556	1	Hydraulic Tube ASM
4	3256-24	2	Washer-Plain
6	145-2557	1	Manifold-Tube
7	340-142	1	Fitting-Elbow, 90 DEG
7:1	237-58	1	O-Ring
7:2	237-81	1	O-Ring
8	ST80801	2	Screw-HSH
9	48-9590	2	Washer-Lock
10	103-9511	2	Nut-Flg
11	104-8300	2	Nut-HF, NI
12	3230-1	2	Bolt-CARR

Ref.	Part Number	Qty.	Description
14	340-3	1	Fitting-Straight
14:1	237-22	1	O-Ring
14:2	237-79	1	O-Ring
15	237-161	1	O-Ring
16	133-2946-0P	1	Brkt-Gear Pump
17	92-4799	1	Fitting-Tee, HYD
17:1	237-79	1	O-Ring
17:2	237-22	2	O-Ring
18	86-5480	1	Nipple-Test
19	354-79	1	Cap-Dust
20	145-2548-0P	1	Bracket-Lift, Pump
21	3290-378	1	Tie-Cable

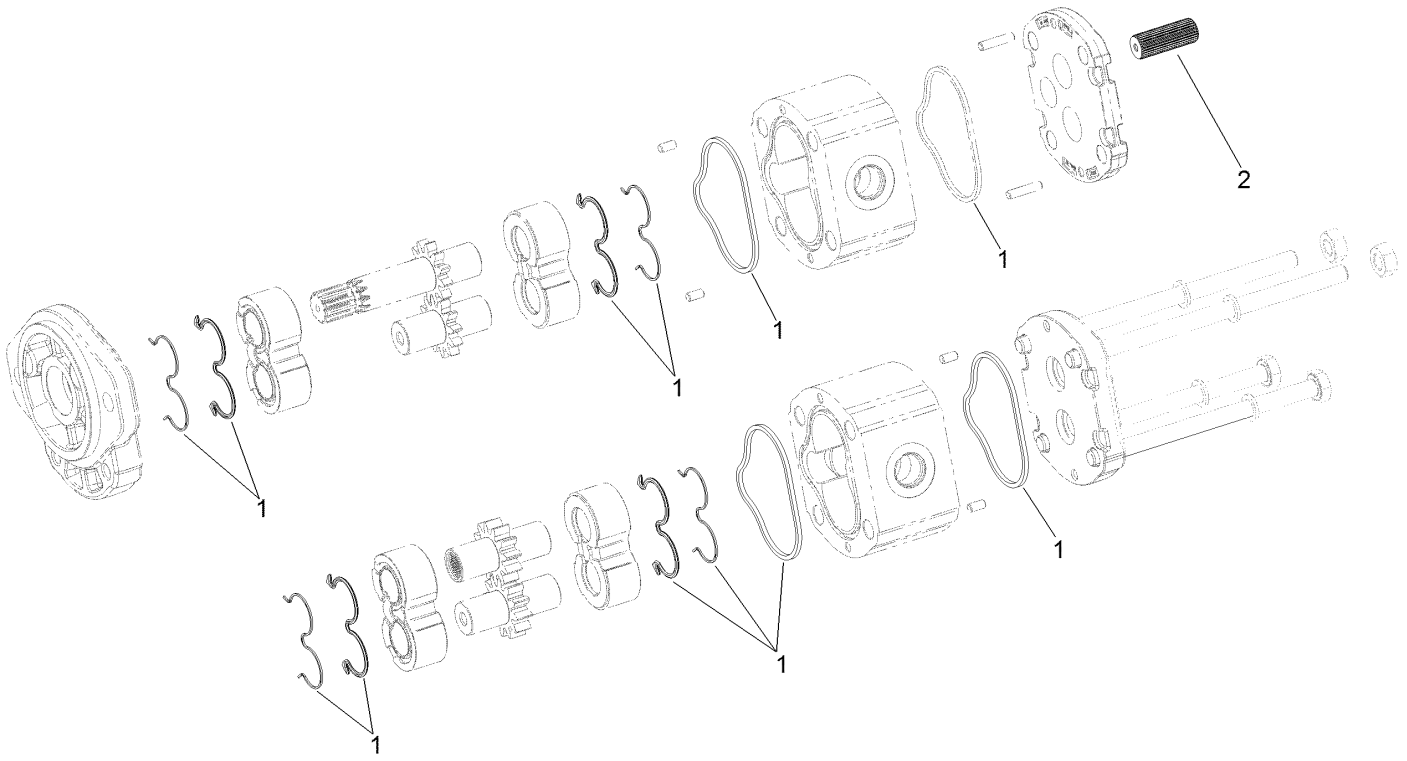

Tandem Gear Pump Assembly No. 125-1530

Ref.	*Part Number*	*Qty.*	*Description*
1	120-5155	1	Seal Kit
2	120-6284	1	Hub-Connecting

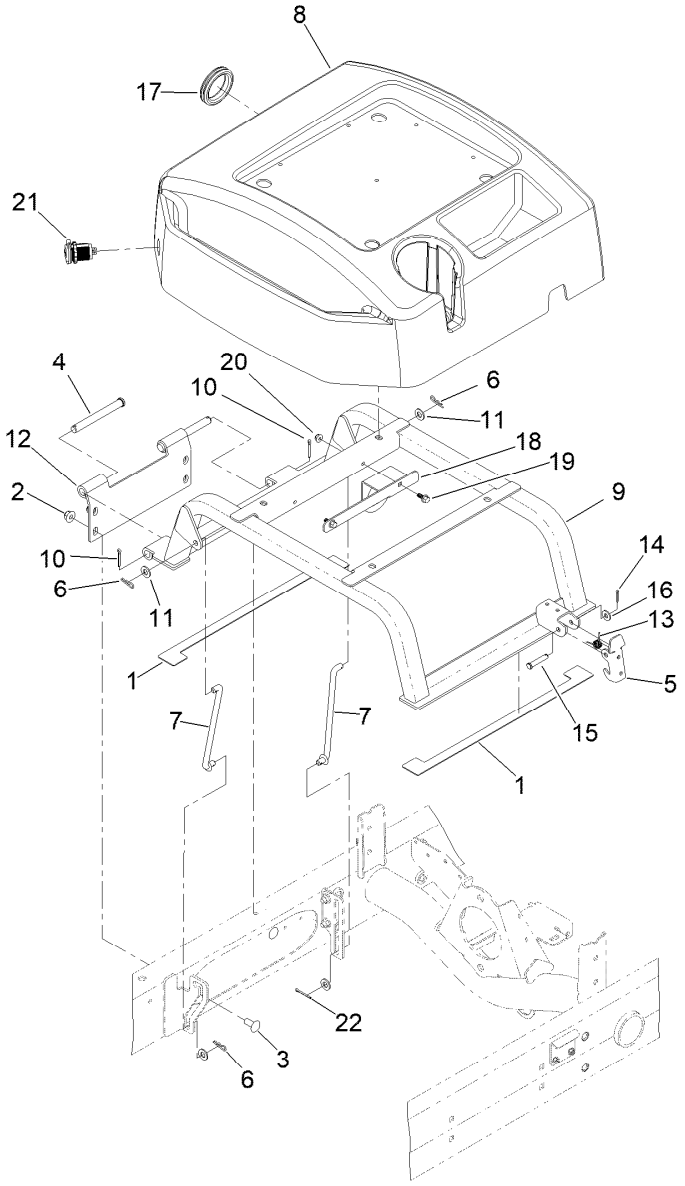

Seat Base Assembly

Ref.	Part Number	Qty.	Description
1	110-5255	2	Bumper-Base, Seat
2	104-8301	4	Nut-HF, NI
3	3231-27	4	Screw-CARR
4	283-83	2	Pin-Clevis
5	110-8971	1	Latch
6	3290-307	3	Pin-Cotter
7	98-0917	2	Rod-Prop
8	145-2450	1	Cover-Seatbase
9	125-2122-03	1	Seat Base ASM
10	3272-11	2	Pin-Cotter
11	3256-24	4	Washer-Plain

Ref.	Part Number	Qty.	Description
12	125-2121-03	1	Hinge-Seatbase
13	104-4821	1	Spring-Torsion
14	3272-6	1	Pin-Cotter
15	94-3829	1	Pin-Clevis
16	3256-2	1	Washer-Flat
17	240-12	1	Grommet-Rubber
18	145-2480-0P	1	Bracket-Harness
19	99-6810	2	Screw-HHF
20	104-7201	2	Nut-HF, NI
21	131-8388	1	Socket-USB
22	3272-4	1	Pin-Cotter

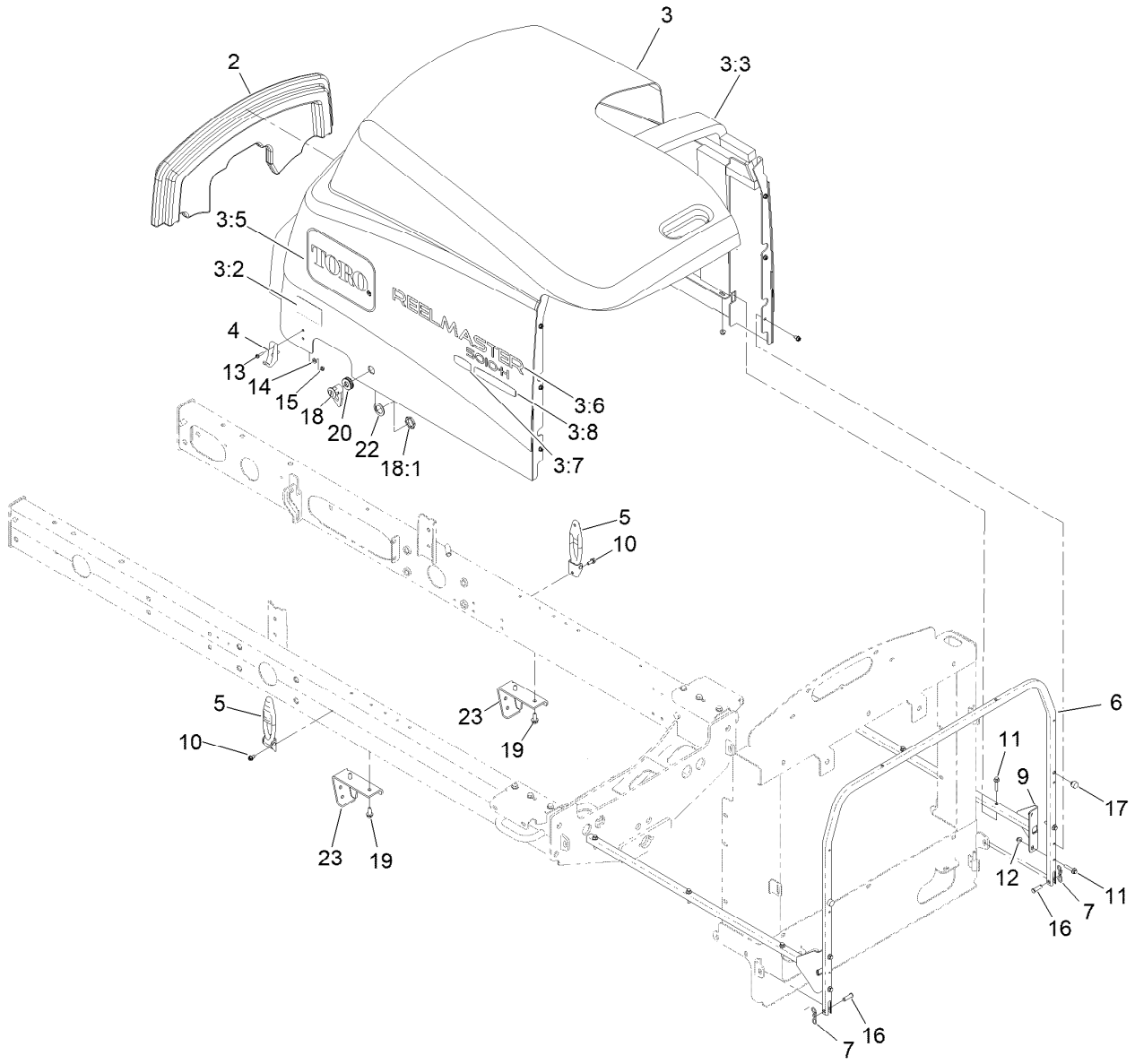

Hood Assembly

Ref.	Part Number	Qty.	Description
2	145-2456	1	Saddle-Hood
3	145-2536	1	Hood ASM (Rm5010-H Service)
3:2	106-6754	2	Decal-Danger
3:3	110-5252	1	Foam-Sealed
3:4	110-9002	1	Foil Tape Kit ●
3:5	66-6140	2	Decal
3:6	127-2304	2	Decal
3:7	119-7580	2	Decal-Smart, Energy
3:8	121-1594	2	Decal-Smart Power
4	103-2897	2	Latch-Catch
5	103-2898	2	Latch-Rubber
6	125-8819-03	1	Tube-Frame, Hood
7	105-7512	2	Pin-Tie, Bow
9	108-1790-03	2	Tube
10	32104-17	8	Screw-HWH
11	3234-21	10	Screw-HHF
12	104-7201	10	Nut-HF, NI
13	32105-13	4	Screw-HWH
14	3256-14	4	Washer-Flat
15	3296-12	4	Nut-Lock, NI
16	283-61	2	Pin-Yoke
17	107-8042	2	Bumper-Rubber
18	98-5398	1	Latch
18:1	3218-20	1	Nut-Jam
19	32104-32	4	Screw-HWH
20	104-1453	1	Grommet
22	99-4958	1	Spacer
23	110-0979-03	2	Bracket-Deflector

● Not illustrated

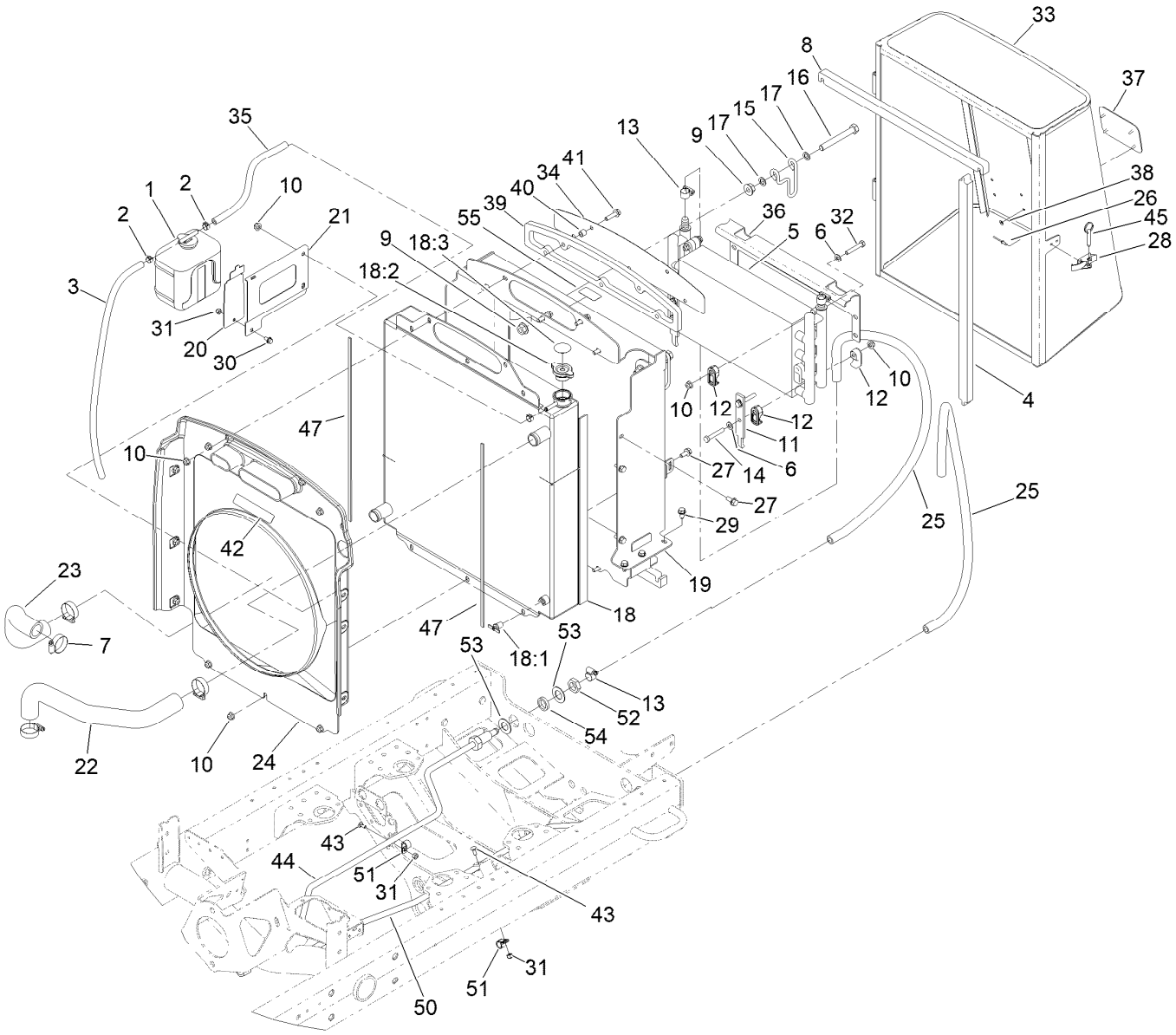

Radiator Assembly

Ref.	Part Number	Qty.	Description
1	108-0638	1	Bottle-Overflow
2	92-2379	3	Clamp-Hose
3	110-3257	1	Hose-Fuel
4	110-0967	2	Seal-Foam
5	127-2480	1	Cooler-Oil
6	3256-23	8	Washer-Plain
7	2412-3	4	Clamp-Hose
8	110-0968	2	Seal-Foam
9	32128-49	4	Nut-HHF
10	104-8300	22	Nut-HF, NI
11	104-5460-03	2	Plate-Mount, Oil Cooler
12	105-3943	16	Clamp-Cooler, Oil
13	2412-119	4	Clamp-Hose
14	322-10	4	Screw-HH
15	104-5429	2	Clamp-Form, Wire
16	325-17	2	Screw-HH
17	41-8440	4	Washer
18	119-6956	1	Radiator ASM
18:1	304-46	1	Draincock
18:2	93-5957	1	Cap-Radiator
18:3	106-6755	1	Decal-Cap, Radiator

Ref.	Part Number	Qty.	Description
19	127-2665-03	1	Frame-Support, Radiator
20	108-1665-0P	1	Bracket - Reservior
21	108-1666-0P	1	Bracket - Reservoir
22	108-1696	1	Hose-Formed
23	108-1697	1	Hose-Formed
24	127-2474	1	Shroud-Fan
25	127-2346	2	Hose
26	3269-15	2	Rivet-Pop
27	3234-5	9	Screw-HHF
28	115-1554	1	Latch-Draw
29	32104-32	6	Screw-HWH
30	3234-13	1	Screw-HHF
31	3296-42	3	Nut-Lock, NI
32	322-21	4	Screw-HH
33	110-0952-03	1	Screen ASM
34	108-1843-0P	1	Screen - Air Intake
35	110-4104	1	Hose-Fuel
36	107-2043-03	1	Bracket-Oil Cooler, Top
37	93-6028	1	Plate-Logo
38	138-6996	4	Nut-Push
39	110-5324	1	Seal-Foam

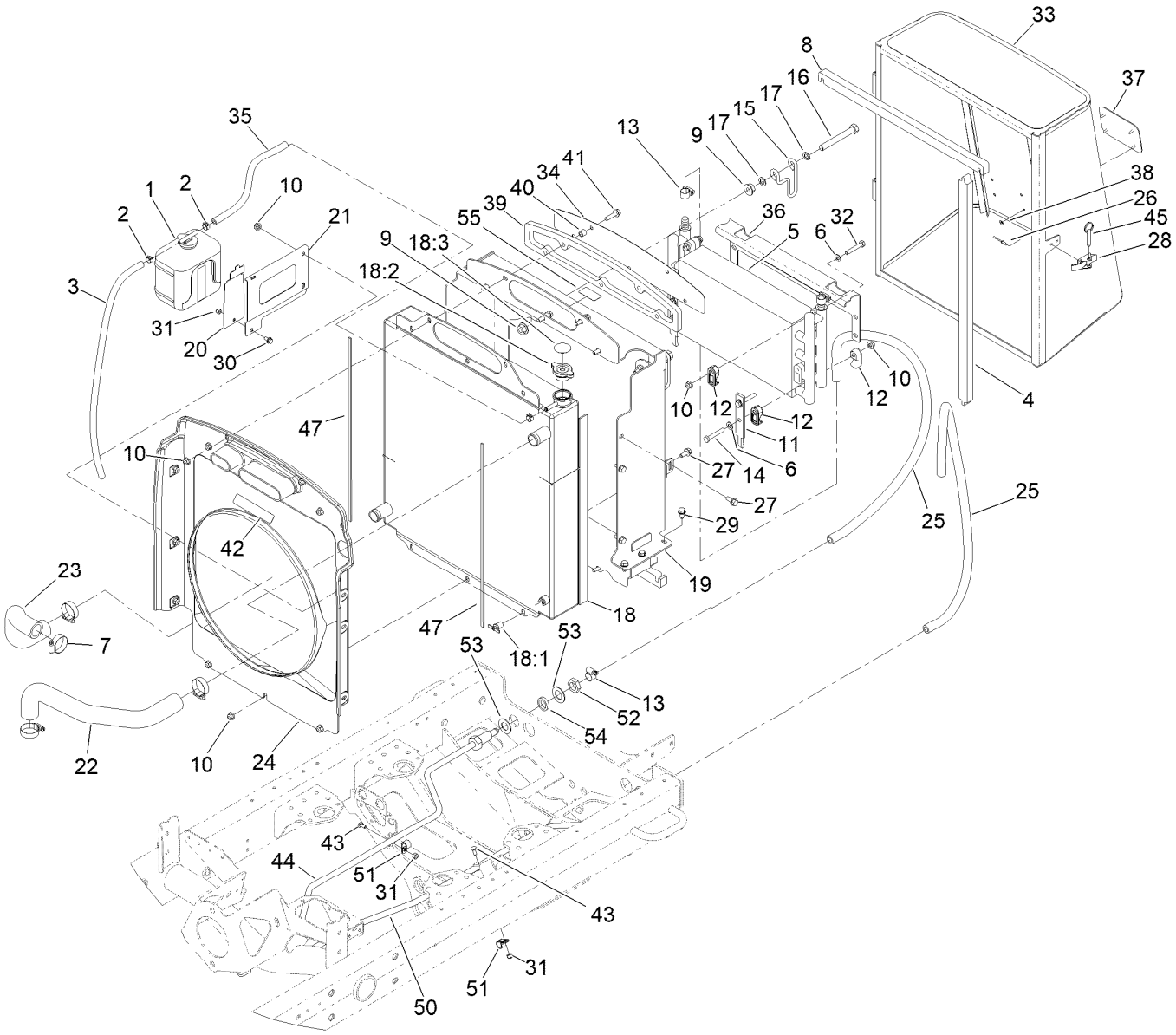

Radiator Assembly (continued)

Ref.	Part Number	Qty.	Description
40	1-603903	5	Spacer
41	3234-36	5	Screw-HHF
42	93-7272	1	Decal-Warning
43	3229-11	2	Screw-CARR
44	145-2571	1	Hydraulic Tube ASM
45	115-1556	1	Pin-Ball, Detent
47	110-0971	2	Seal-Foam

Ref.	Part Number	Qty.	Description
50	127-2475	1	Tube ASM
51	2412-73	2	Clamp-R
52	340-127	2	Nut-Bulkhead
53	69-8930	4	Washer
54	127-2344	2	Spacer
55	137-8127	1	Decal-No Spray

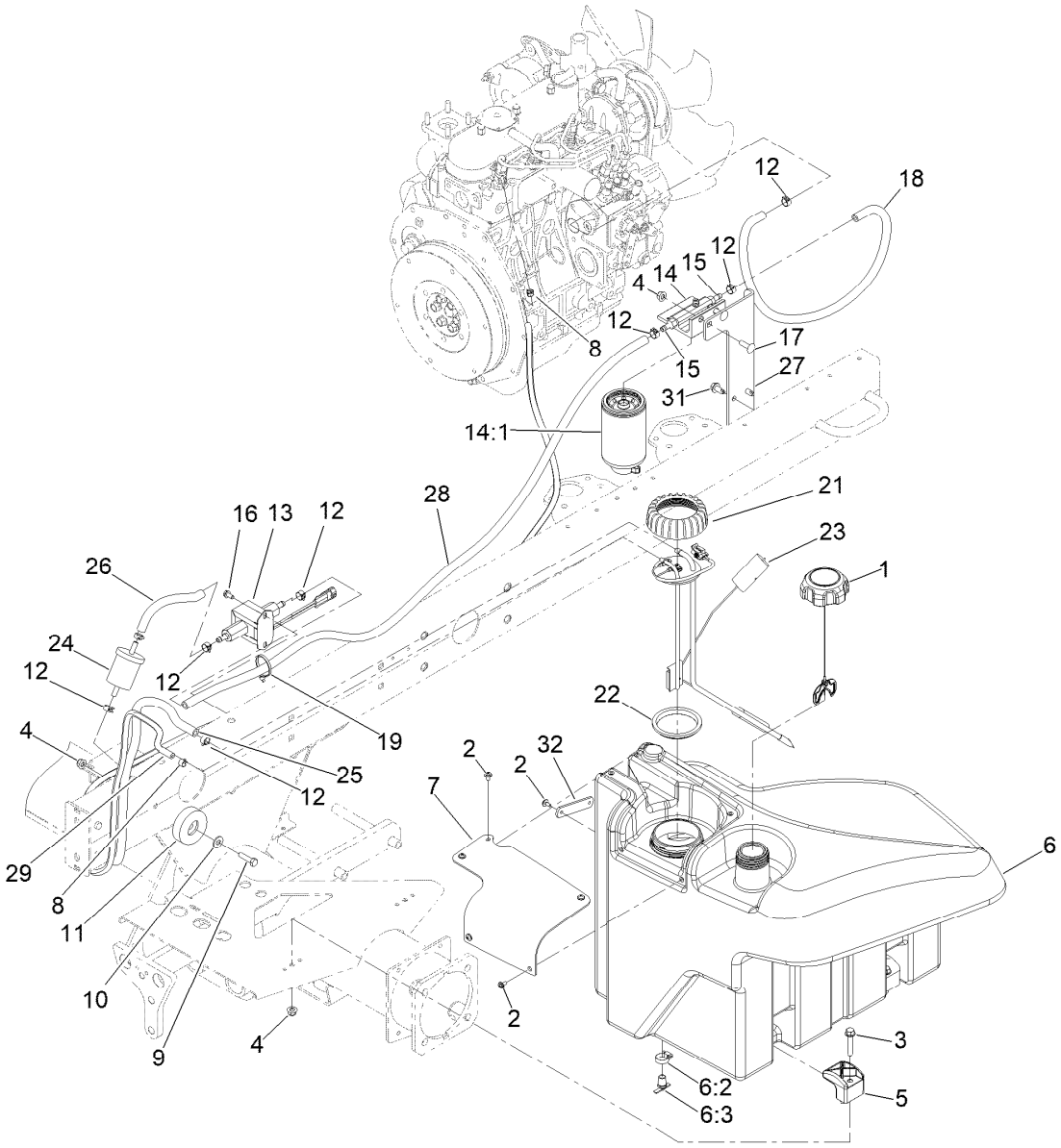

Fuel System Assembly

Ref.	Part Number	Qty.	Description
1	117-5894	1	Fuel Cap ASM
2	109-2661	7	Screw-PPH
3	94-5780	2	Screw-HWH
4	104-8300	5	Nut-HF, NI
5	107-4543	2	Clamp
6	125-2907	1	Fuel Tank ASM
6:2	2412-36	1	Clamp-Hose
6:3	304-46	1	Draincock
7	125-2903	1	Cover-Pump/Sender
8	2412-80	2	Clamp-Hose
9	322-6	1	Screw-HH
10	3256-3	1	Washer-Flat
11	108-1605	1	Bumper-Recess
12	92-2379	8	Clamp-Hose
13	145-3160	1	Pump-Fuel, Electric
14	110-9044	1	Separator-Filter
14:1	110-9049	1	Filter-Spin On, Fuel/Water

Ref.	Part Number	Qty.	Description
15	353-783	2	Fitting-STR
16	32144-4	2	Screw-HWH
17	3230-22	2	Screw-CARR
18	109-0309	1	Hose-Fuel
19	3290-378	3	Tie-Cable
21	140-6245	1	Cap-Pump, Fuel
22	140-6246	1	Gasket-Pump, Fuel,
23	121-5642	1	Sender-Fuel
24	98-7612	1	Filter-Fuel
25	110-3257	1	Hose-Fuel
26	112-2386	1	Hose-Fuel
27	110-8968-0P	1	Mount-Water Separator
28	138-4714	1	Hose-Fuel
29	125-8808	1	Hose-Fuel
31	32104-32	4	Screw-HWH
32	125-2945	1	Strap-Cable

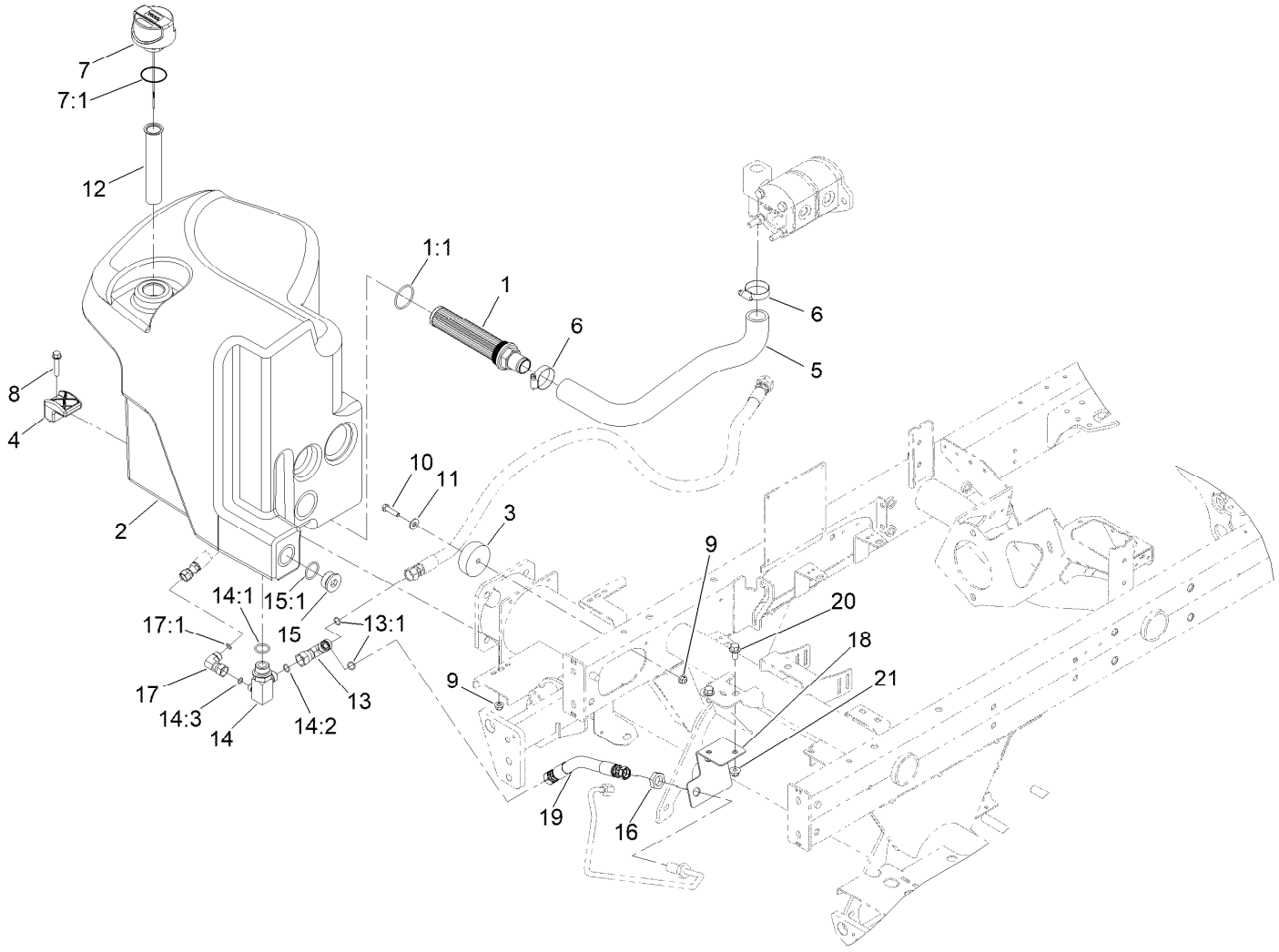

Hydraulic Tank Assembly

Ref.	Part Number	Qty.	Description
1	145-2463	1	Strainer-Tank, Hydraulic
1:1	340-136	1	O-Ring
2	145-2487	1	Tank-Hydraulic
3	108-1605	1	Bumper-Recess
4	107-4543	2	Clamp
5	144-2076	1	Hose-Suction
6	2412-3	2	Clamp-Hose
7	117-0193	1	Cap-Hydraulic, Vented Breather
7:1	237-101	1	O-Ring
8	94-5780	2	Screw-HWH
9	104-8300	3	Nut-HF, NI
10	322-6	1	Screw-HH
11	3256-3	1	Washer-Flat
12	61-2790	1	Filter-Screen

Ref.	Part Number	Qty.	Description
13	340-104	1	Fitting-Tee
13:1	237-30	2	O-Ring
14	144-2080	1	Fitting-Manifold
14:1	237-81	1	O-Ring
14:2	237-30	1	O-Ring
14:3	237-22	1	O-Ring
15	105-3921	1	Fitting-Plug
15:1	237-146	1	O-Ring
16	340-70	1	Nut-Lock
17	340-159	1	Elbow-90
17:1	237-22	2	O-Ring
18	145-2496-0P	1	Bracket-Bulkhead, Return
19	145-2488	1	Hose ASM-Hydraulic
20	3234-1	2	Screw-HHF
21	104-8301	2	Nut-HF, NI

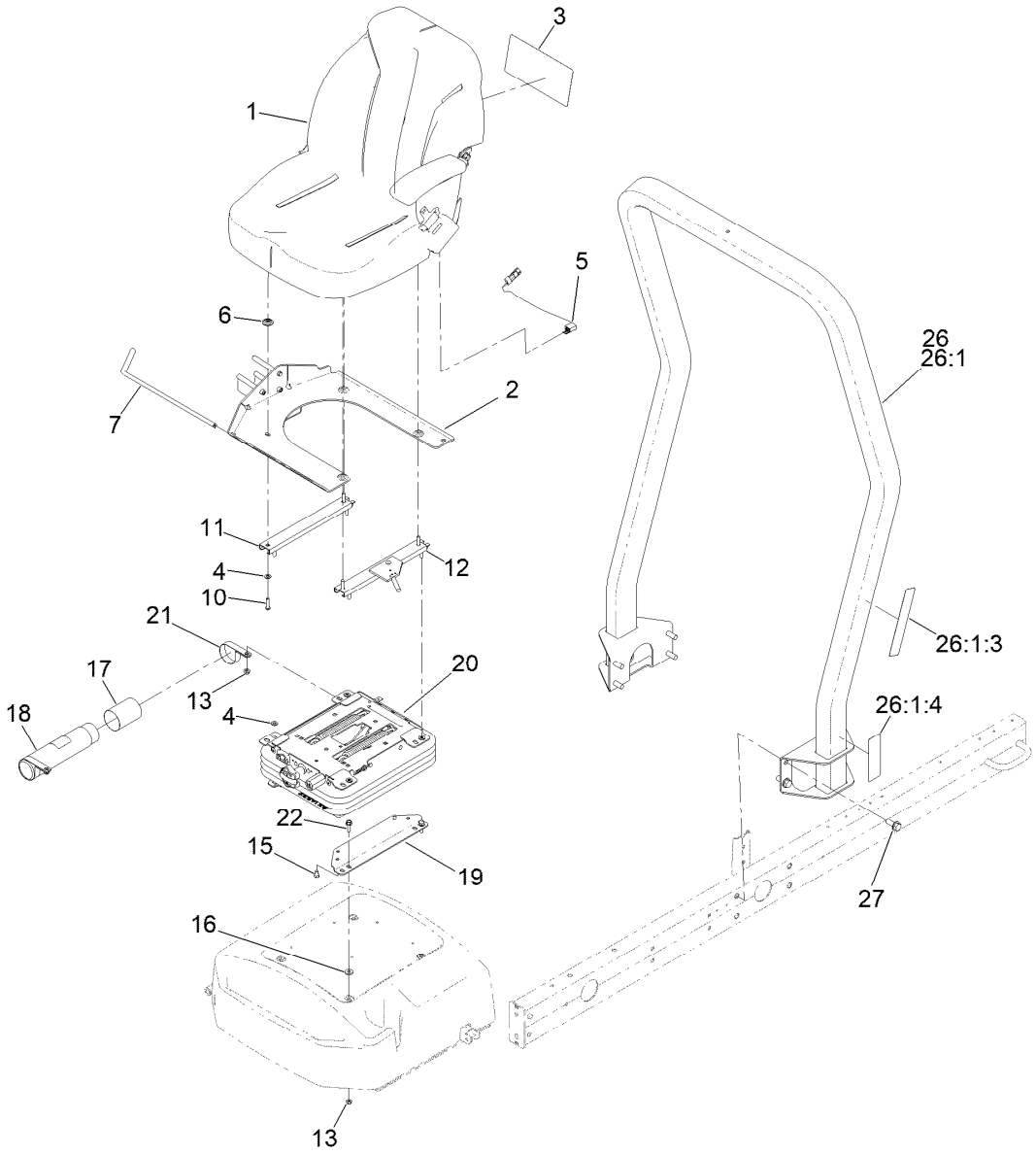

Seat and Roll-Over Protection System Assembly

Ref.	Part Number	Qty.	Description
1	139-2700	1	Seat ASM
2	138-6985-03	1	Mount-Seat
3	145-2572	1	Decal-Service
4	3256-23	8	Washer-Plain
5	108-8657	1	Harness-Wire, Seat
6	136-9002	4	Spacer-Mounting
7	130-7100	1	Trim-Seatbase
10	3290-511	4	Screw-HSBH
11	92-8990	1	Adjuster-Seat, Non-Locking
12	92-8991	1	Adjuster (W/Latch)
13	104-8300	8	Nut-HF, NI
15	48-7680	4	Screw-HH

Ref.	Part Number	Qty.	Description
16	71-9310	4	Spacer
17	104-7048	1	Cap-Housing
18	104-7050	1	Tube-Manual
19	108-6590-0P	2	Bracket-Seat, Lower
20	145-5295	1	Suspension ASM
21	2412-133	2	Clamp-R
22	3234-17	4	Screw-HHF
26	136-7954	1	ROPS ASM
26:1		1	ROPS ASM ●
26:1:3	136-3702	1	Decal-Safety, ROPS
26:1:4	136-2159	1	Decal-Seat Service
27	3234-38	8	Screw-HHF

● Not serviced separately

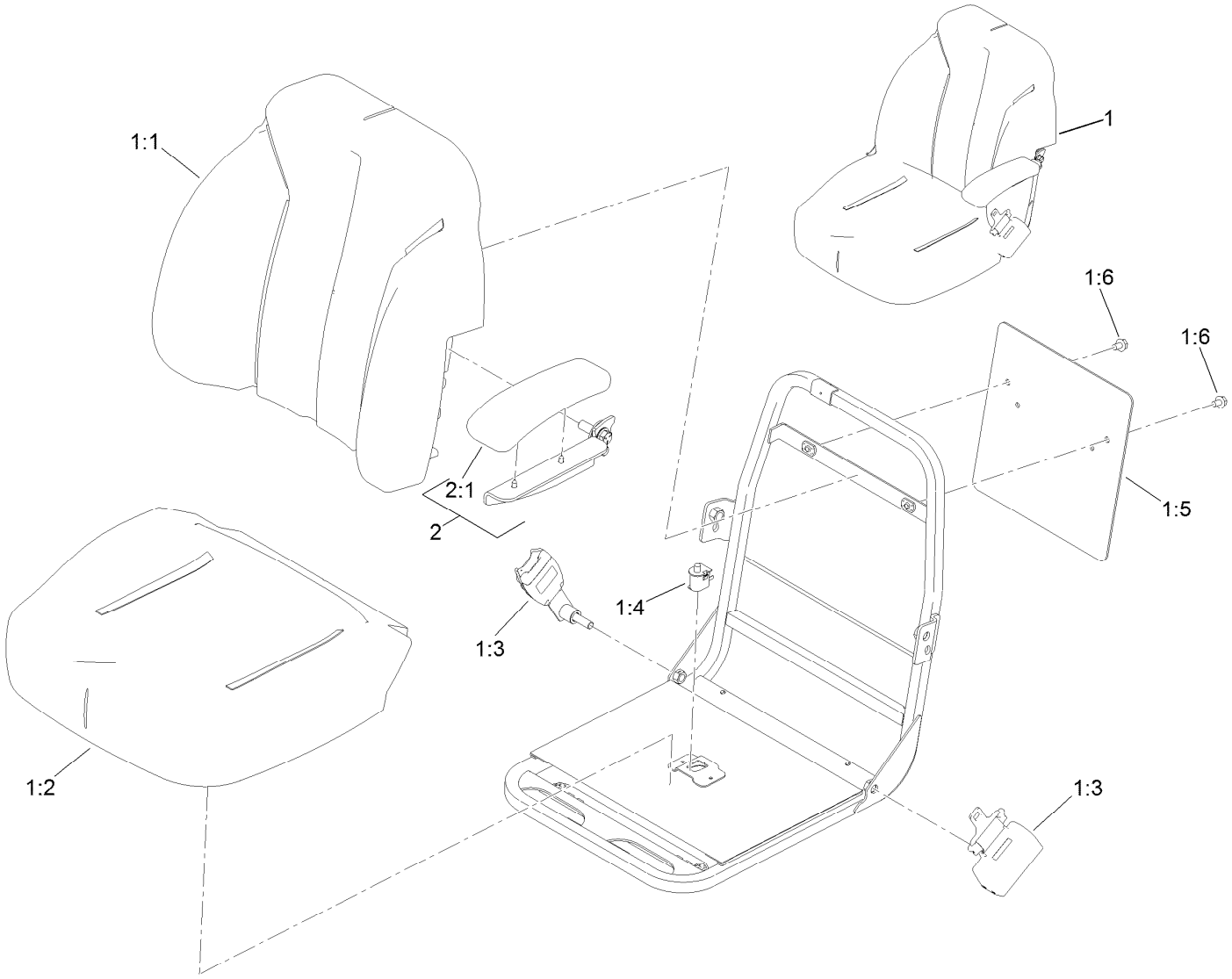

Seat Assembly No. 139-2700

Ref.	*Part Number*	*Qty.*	*Description*
1	139-2680	1	Seat ASM
1:1	145-0083	1	Cover-Seat, Back
1:2	145-0084	1	Cover-Seat, Bottom
1:3	139-2707	1	Seat Belt Kit
1:4	82-2190	1	Switch-Bail
1:5	139-2701	1	Plate-Decal
1:6	3234-30	2	Screw-HHF
2	121-3660	1	LH Arm Rest Kit
2:1	110-4163	1	Cushion-Rest, Arm

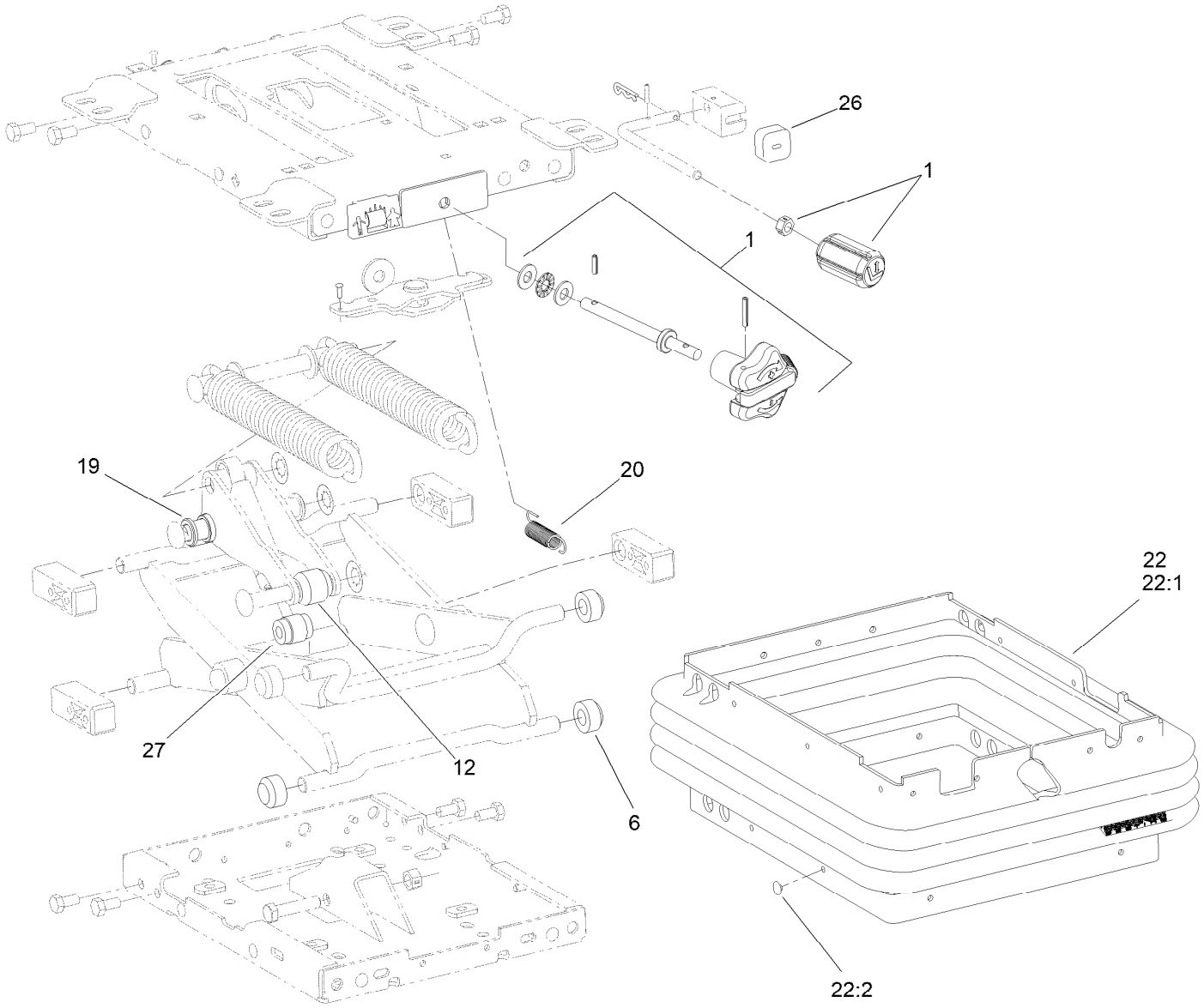

Mechanical Seat Suspension Assembly No. 145-5295

Ref.	*Part Number*	*Qty.*	*Description*
1	145-5296	1	Knob Service Kit
6	108-9632	4	Roller
12	145-5297	1	Roller-Plastic, 36MM
19	108-9622	2	Tube
20	108-9633	1	Spring-Extension
22	112-0164	1	Boot Kit
22:1		1	Boot-Suspension ●
22:2	108-9641	21	Clip-Plug
26	108-9634	1	Bumper
27	108-9614	1	Damper

● Not serviced separately

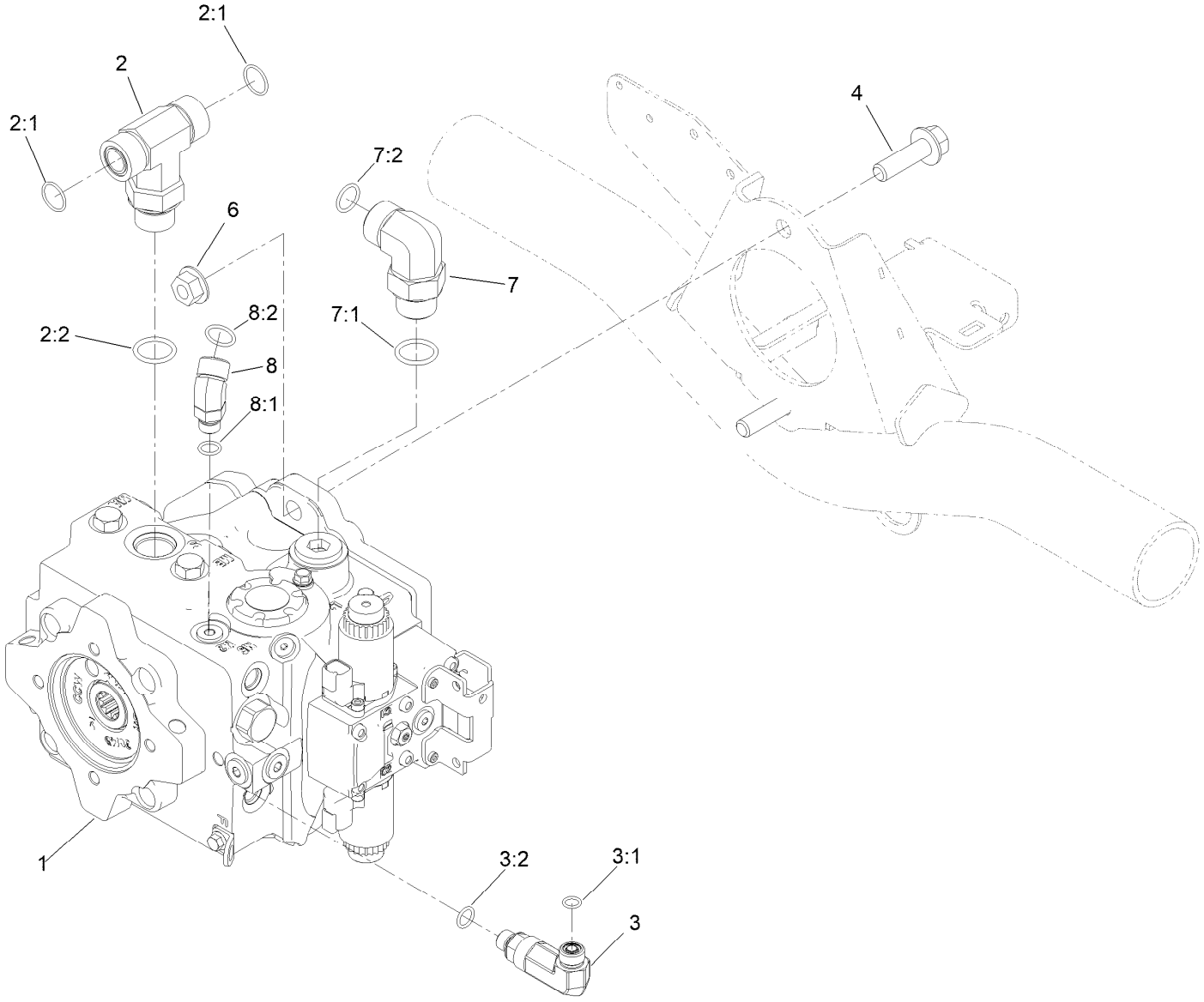

Traction Pump Mounting Assembly

Ref.	*Part Number*	*Qty.*	*Description*
1	144-2060	1	Pump-Hydraulic
2	104-4836	1	Fitting-Tee
2:1	237-58	2	O-Ring
2:2	237-81	1	O-Ring
3	340-5	1	Fitting-Straight
3:1	237-42	1	O-Ring
3:2	237-30	1	O-Ring
4	130-6481	2	Screw-HHF
6	32128-49	2	Nut-HHF
7	340-139	1	Fitting-Elbow 90
7:1	237-81	1	O-Ring
7:2	237-65	1	O-Ring
8	340-96	1	Adapter
8:1	237-30	1	O-Ring
8:2	237-42	1	O-Ring

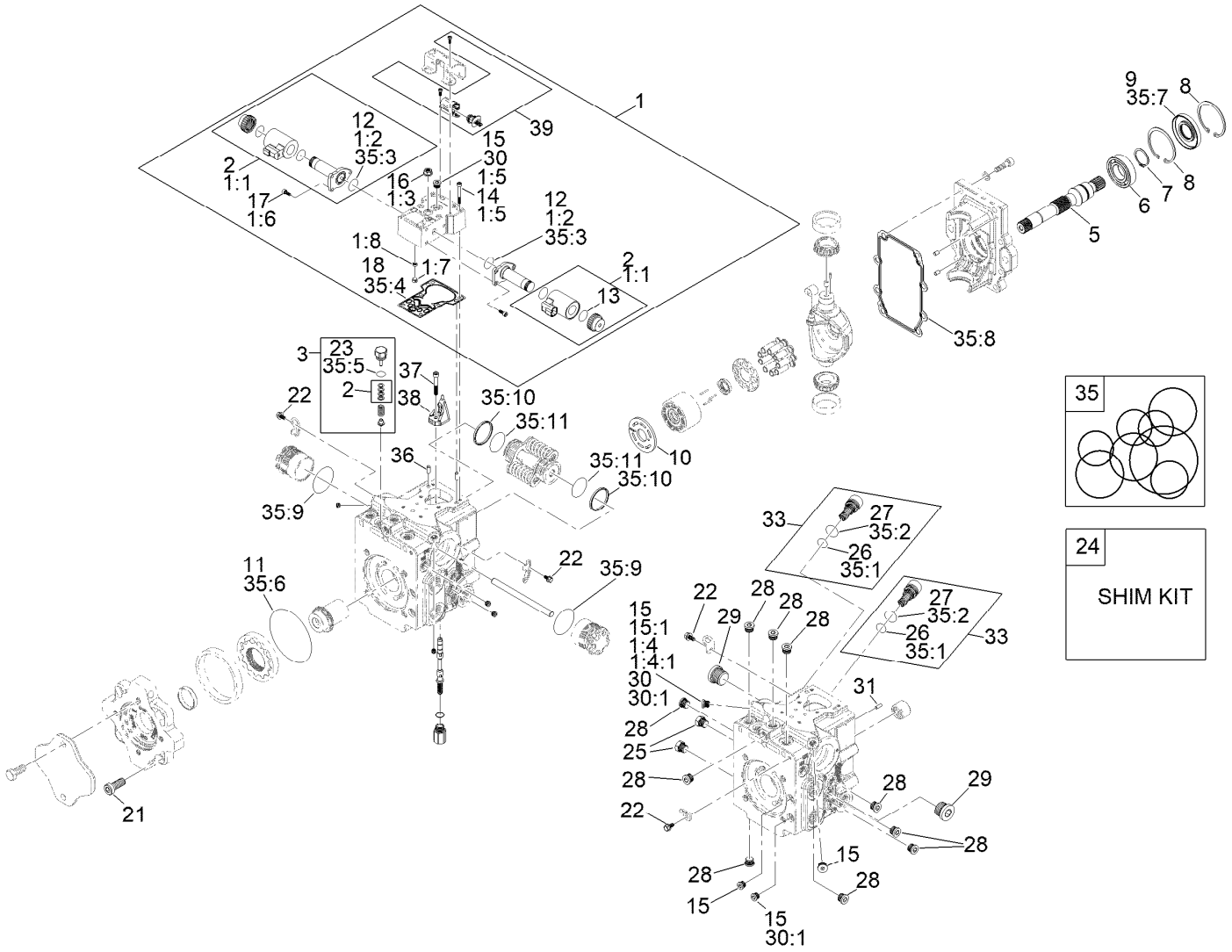

Hydraulic Pump Assembly No. 144-2060

Ref.	Part Number	Qty.	Description
1	136-3209	1	Control Kit (12 Volt)
1:1	132-6204	2	Coil Kit
1:2	125-5288	2	O-Ring
1:3	125-5273	1	Nut-Seal
1:4	75-0170	1	Plug-Thread, Straight
1:4:1	92-8777	1	O-Ring
1:5	125-5274	6	Screw
1:6	125-5272	6	Screw
1:7	136-3213	1	Gasket-Control
1:8	136-3218	1	Sensor Kit
2	125-5294	2	Coil Kit
3	161-7203	1	Charge Relief Valve
5	139-4811	1	Shaft-13Tooth
6	139-4820	1	Bearing-Ball
7	139-4806	1	Ring-Retaining
8	139-4831	2	Ring-Retaining
9	161-7202	1	Oil Seal-Black
10	139-4813	1	Plate-Valve

Ref.	Part Number	Qty.	Description
11	161-7206	1	O-Ring As568-244 Nbr90
12	125-5288	2	O-Ring
13	131-7388	2	O-Ring
14	125-5274	6	Screw
15	75-0170	4	Plug-Thread, Straight
15:1	92-8777	1	O-Ring
16	161-7200	1	Nut-Hex Seal
17	125-5272	6	Screw
18	125-5283	1	Gasket-Control
21	125-5282	4	Screw
22	125-5270	4	Screw
23	125-5298	1	O-Ring
24	92-1353	1	Shim Kit
25	136-1026	1	Plug ASM
26	75-0240	2	O-Ring
27	84-0560	2	O-Ring
28	69-3080	10	Plug
29	69-3130	1	Plug

● Not illustrated

■ Not serviced separately

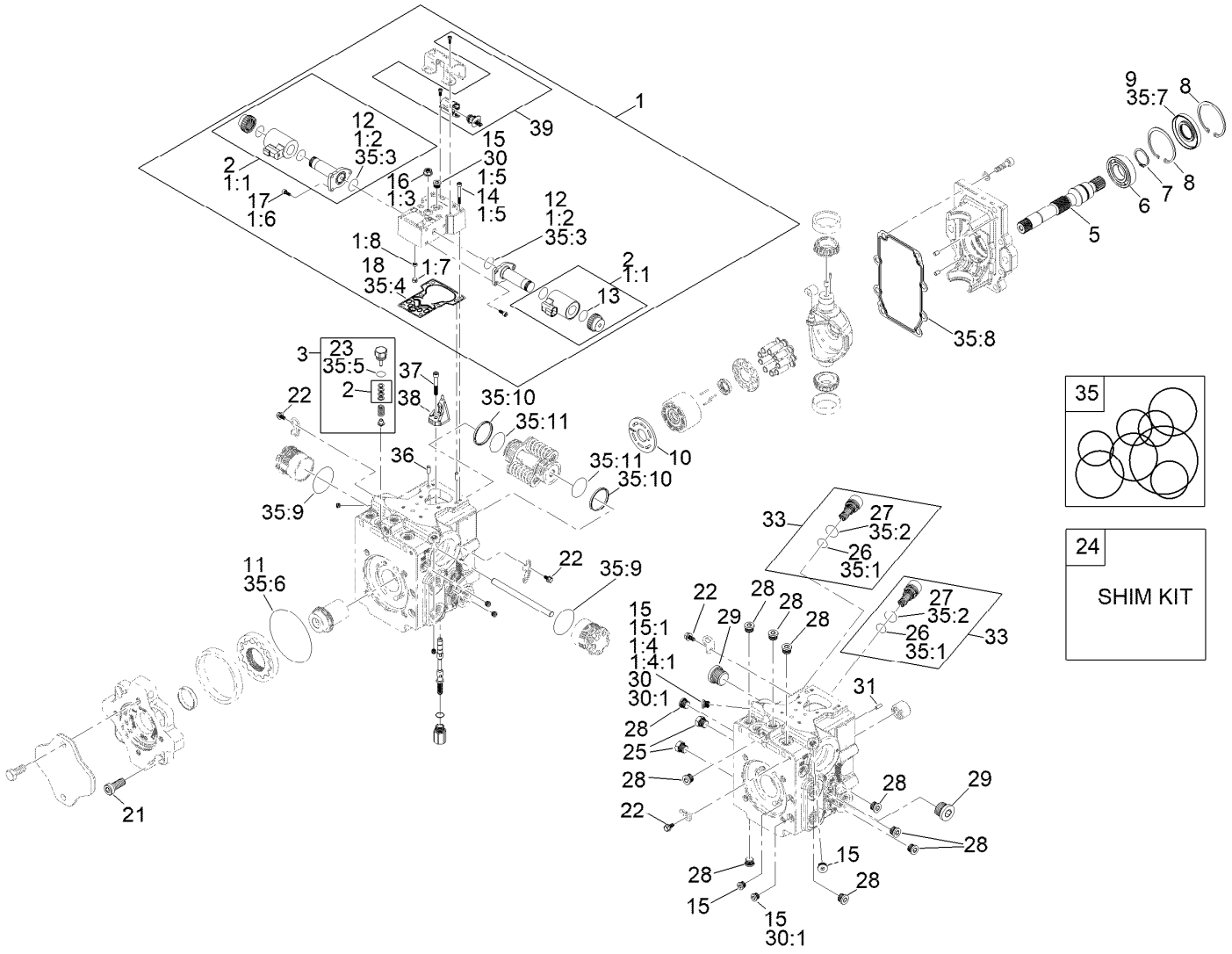

Hydraulic Pump Assembly No. 144-2060 (continued)

Ref.	Part Number	Qty.	Description
30	75-0170	4	Plug-Thread, Straight
30:1	92-8777	1	O-Ring
31	75-0510	1	Pin
33	161-7204	1	Valve-Scr Assembly 260 Bar (3770 PSI)
35	132-6205	1	Overhaul Seal Kit
35:1	75-0240	2	O-Ring
35:2	84-0560	2	O-Ring
35:3	125-5288	2	O-Ring
35:4	125-5283	1	Gasket-Control
35:5	125-5298	1	O-Ring
35:6	132-6206	1	O-Ring
35:7	127-6214	1	Seal-Lip
35:8		1	Gasket ■
35:9		2	O-Ring ■
35:10		2	Piston Ring ■
35:11		2	O-Ring ■
36	136-3215	2	Pin
37	136-3216	1	Screw, M6 X 35
38	136-3217	1	Link - Swashplate Feedback
39	136-3218	1	Sensor Kit ●

● Not illustrated

■ Not serviced separately

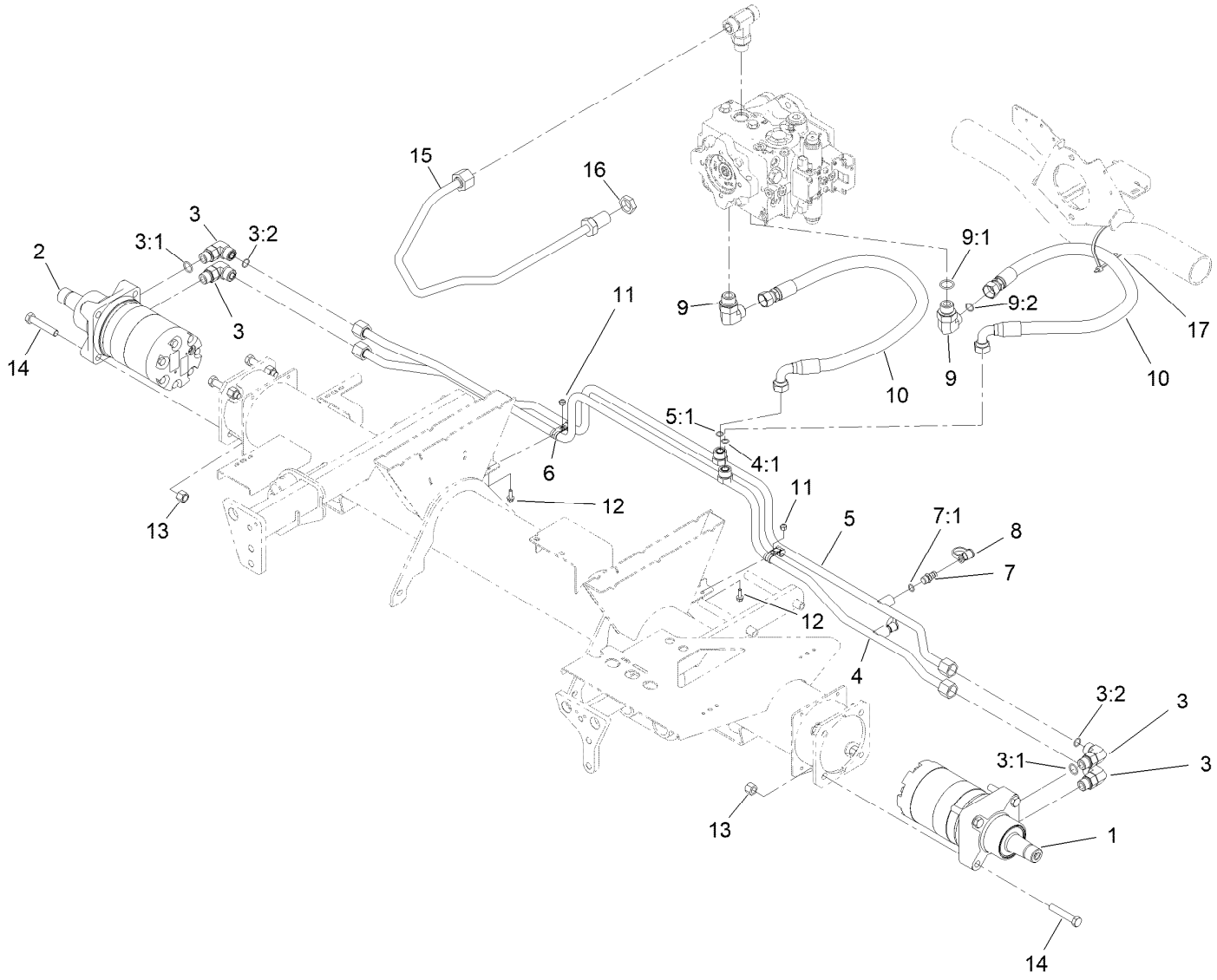

Traction Hydraulic Assembly

Ref.	Part Number	Qty.	Description
1	163-3542	1	Hydraulic Motor ASM
2	163-3543	1	Hydraulic Motor ASM
3	340-17	4	Fitting-Elbow, 90 DEG
3:1	237-65	1	O-Ring
3:2	237-80	1	O-Ring
4	125-1493	1	Tube ASM
4:1	237-65	1	O-Ring
5	125-1494	1	Tube ASM
5:1	237-65	1	O-Ring
6	2412-134	4	Clamp-R
7	59-7410	2	Fitting-Diagnostic
7:1	237-42	1	O-Ring

Ref.	Part Number	Qty.	Description
8	354-79	2	Cap-Dust
9	340-139	2	Fitting-Elbow 90
9:1	237-81	1	O-Ring
9:2	237-65	1	O-Ring
10	127-2300	2	Hose ASM
11	3296-42	2	Nut-Lock, NI
12	3234-4	2	Screw-HHF
13	3296-23	8	Nut-Lock, NI
14	325-11	8	Screw-HH
15	145-2551	1	Hydraulic Tube ASM
16	340-74	1	Nut-Lock, Bulkhead
17	3334-945	1	Tie-Cable

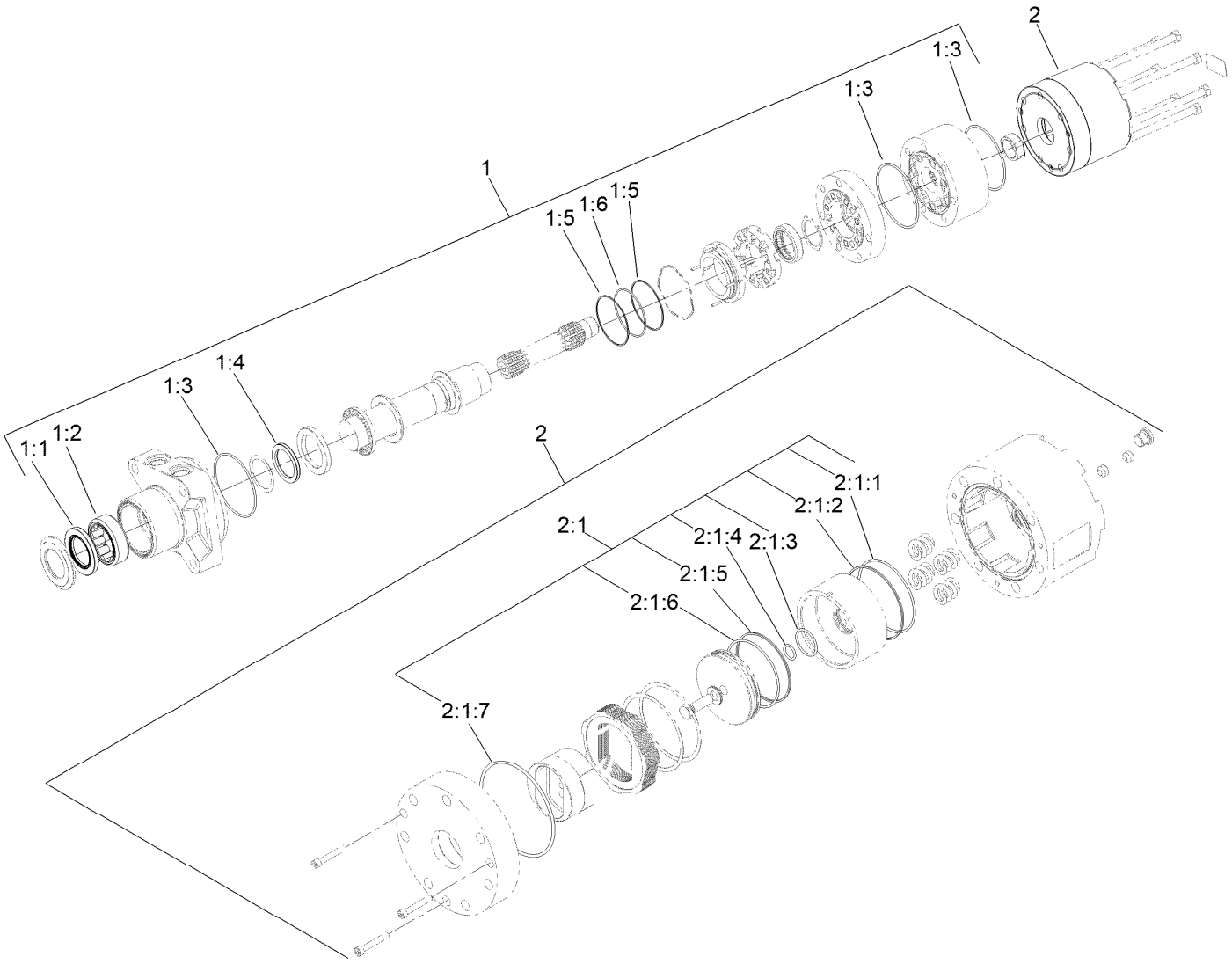

Hydraulic Motor Assembly No. 163-3542

Ref.	Part Number	Qty.	Description
1	161-7208	1	Seal Kit
1:1	161-7209	1	Seal, Grease
1:2	161-7210	1	Shell, Bearing
1:3	161-7211	3	O-Ring
1:4	161-7212	1	Shaft Seal (HP)
1:5	161-7213	2	Back-Up Ring
1:6	161-7214	1	O-Ring
2	163-2617	1	Brake Housing ASM
2:1	163-2627	1	Seal Kit-Brake ASM

Ref.	Part Number	Qty.	Description
2:1:1	161-8367	1	O-Ring
2:1:2	161-8368	1	Backup Ring
2:1:3	161-8369	1	O-Ring
2:1:4	161-8370	1	O-Ring
2:1:5	161-8371	1	Backup Ring
2:1:6	161-8372	1	O-Ring
2:1:7	161-7211	1	O-Ring
2:1:8	161-8373	1	O-Ring ●

● Not illustrated

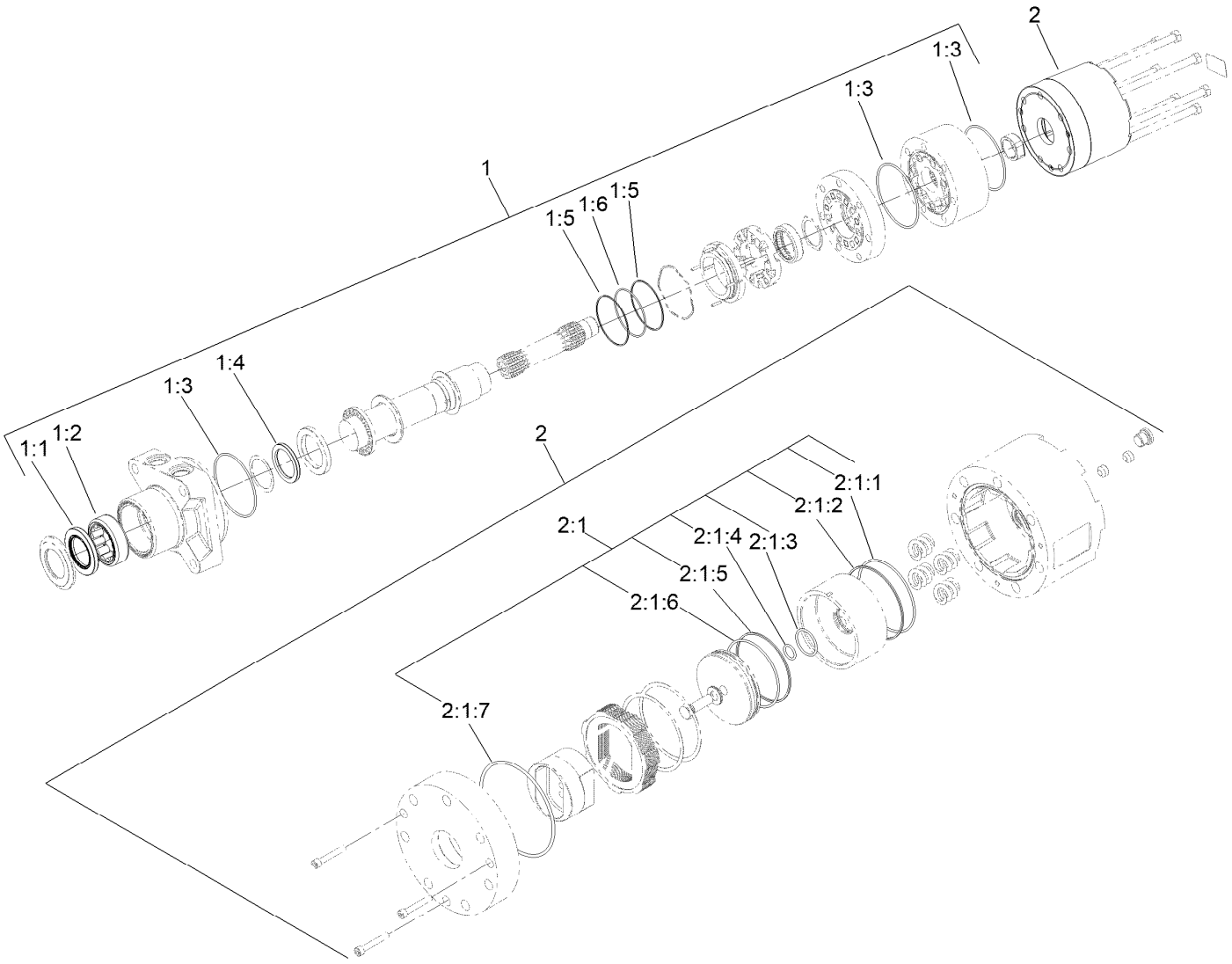

Hydraulic Motor Assembly No. 163-3543

Ref.	Part Number	Qty.	Description
1	161-7208	1	Seal Kit
1:1	161-7209	1	Seal, Grease
1:2	161-7210	1	Shell, Bearing
1:3	161-7211	3	O-Ring
1:4	161-7212	1	Shaft Seal (HP)
1:5	161-7213	2	Back-Up Ring
1:6	161-7214	1	O-Ring
2	163-2617	1	Brake Housing ASM
2:1	163-2627	1	Seal Kit-Brake ASM

Ref.	Part Number	Qty.	Description
2:1:1	161-8367	1	O-Ring
2:1:2	161-8368	1	Backup Ring
2:1:3	161-8369	1	O-Ring
2:1:4	161-8370	1	O-Ring
2:1:5	161-8371	1	Backup Ring
2:1:6	161-8372	1	O-Ring
2:1:7	161-7211	1	O-Ring
2:1:8	161-8373	1	O-Ring ●

● Not illustrated

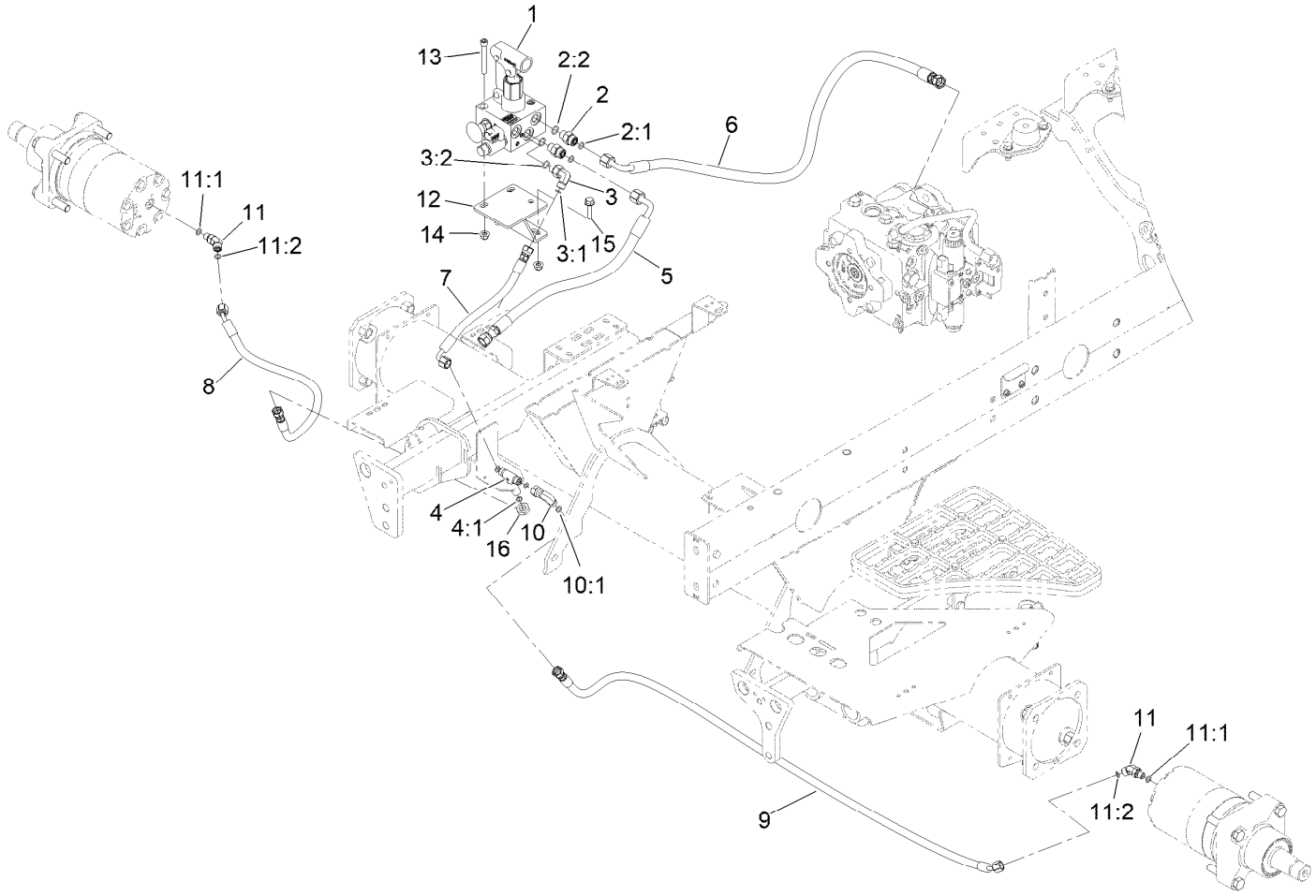

Hydraulic Brake Assembly

Ref.	Part Number	Qty.	Description
1	139-6046	1	Manifold-Brake Release
2	340-2	2	Fitting-Straight
2:1	237-22	1	O-Ring
2:2	237-42	1	O-Ring
3	340-82	1	Fitting-Elbow, 90 DEG
3:1	237-42	1	O-Ring
3:2	237-21	1	O-Ring
4	140-7452	1	Fitting-Tee, Bulkhead
4:1	237-21	3	O-Ring
5	139-1151	1	HYD Hose ASM
6	144-2078	1	Hose ASM-Hydraulic
7	121-4455	1	Hose-HYD
8	145-2599	1	Hose ASM-HYD HP

Ref.	Part Number	Qty.	Description
9	115-2029	1	HYD Hose ASM
10	92-2745	1	Elbow-90
10:1	237-21	1	O-Ring
11	340-103	2	Fitting-HYD, 45 DEG
11:1	237-78	1	O-Ring
11:2	237-21	1	O-Ring
12	145-2459-03	1	Mount - Brake Release [black]
13	3274-40	3	Screw-HSH
14	104-8300	5	Nut-HF, NI
15	3234-29	2	Screw-HHF
16	340-78	1	Nut-Lock

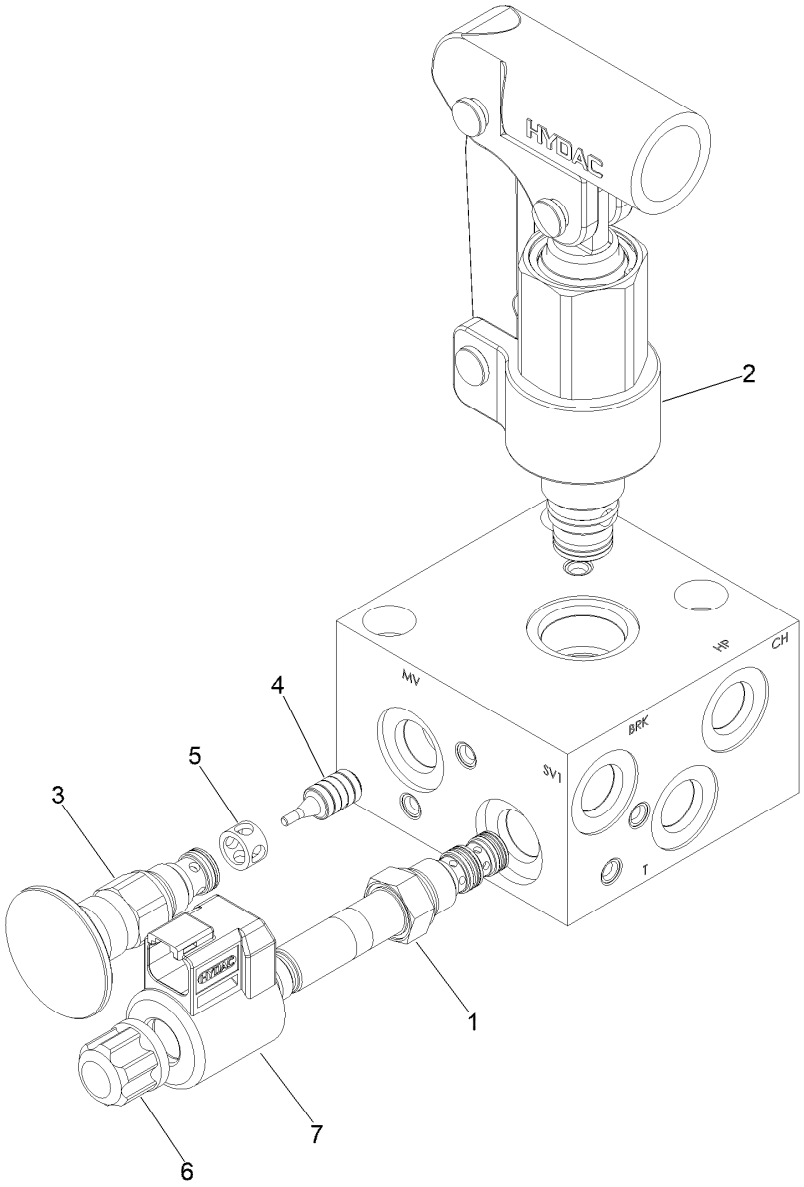

Brake Release Manifold Assembly No. 139-6046

Ref.	*Part Number*	*Qty.*	*Description*
1	145-2563	1	Directional Valve, 3W/2P
2	145-2564	1	Hand Pump
3	145-2565	1	Manual Valve, N.O.
4	145-2566	1	Pilot Piston Assy, Rvs06
5	145-2567	1	Spacer
6	145-2569	1	Coil Nut, Tall (06 Valves)
S1	145-2568	1	Coil 12Dn01-32-1329

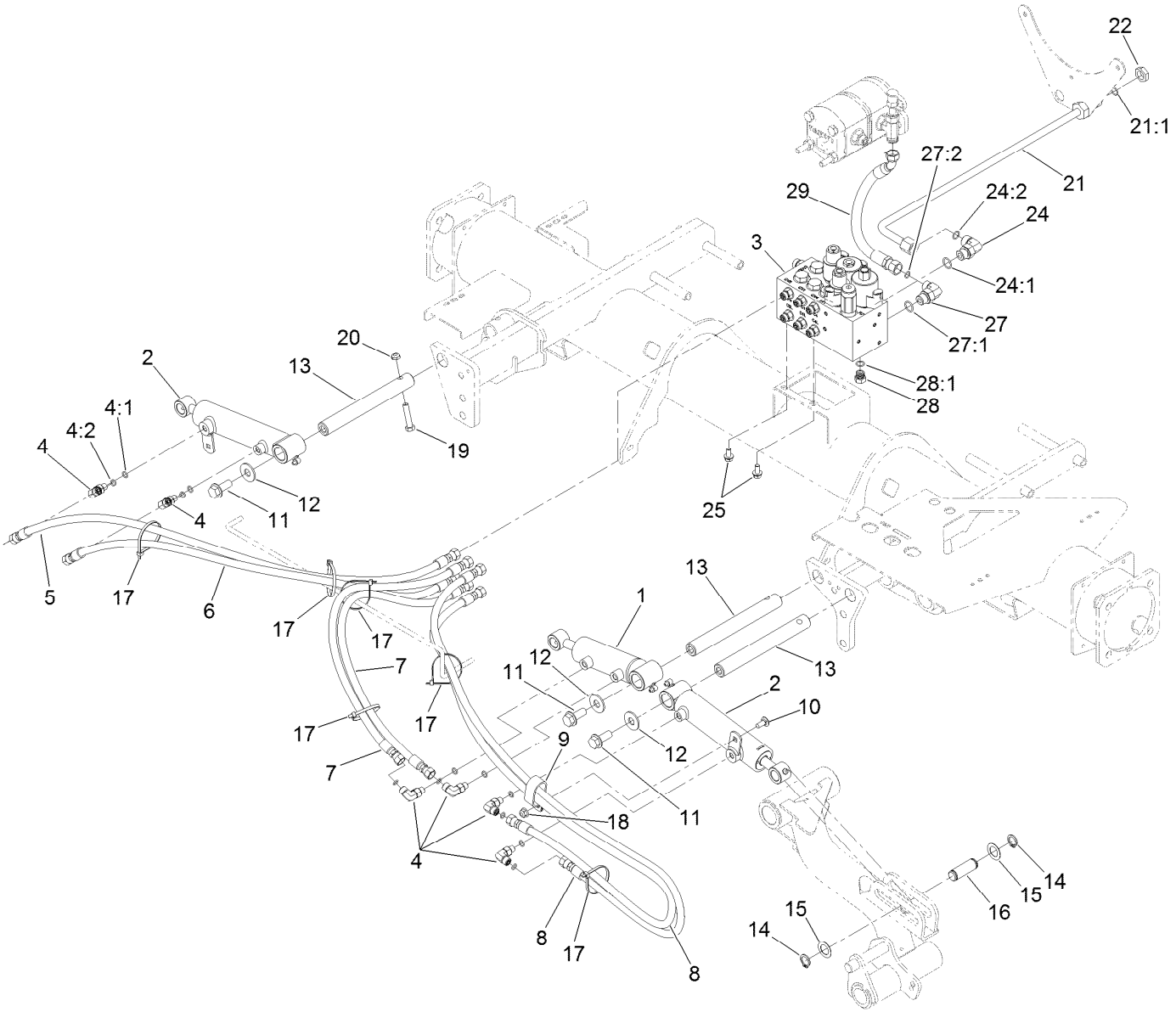

Front Lift Hydraulic Assembly

Ref.	Part Number	Qty.	Description
1	138-6999	1	HYD Cylinder ASM
2	163-3534	2	Cylinder-Hydraulic
3	105-7577	1	HYD Lift Block Manifold ASM
4	340-132	6	Fitting-Elbow, 90 DEG
4:1	237-78	1	O-Ring
4:2	237-21	1	O-Ring
5	127-2498	1	Hose ASM
6	127-2499	1	Hose ASM
7	127-2497	2	Hose ASM
8	127-2496	2	Hose ASM
9	2412-137	1	Clamp-R, Double
10	3230-23	1	Bolt-CARR
11	3234-38	3	Screw-HHF
12	3256-6	3	Washer-Flat
13	117-0148	3	Pin-Cylinder
14	32120-93	6	Ring-Retaining
15	3-6498	6	Washer-Thrust

Ref.	Part Number	Qty.	Description
16	104-0046	3	Pin-Slide, Cylinder
17	3290-379	6	Tie-Cable
18	104-8300	1	Nut-HF, NI
19	323-9	3	Screw-HH
20	3296-59	3	Nut-Lock, NI
21	127-2477	1	Tube ASM
21:1	237-30	1	O-Ring
22	340-127	1	Nut-Bulkhead
24	340-98	1	Fitting-Elbow, 90 DEG
24:1	237-79	1	O-Ring
24:2	237-30	1	O-Ring
25	3234-14	2	Screw-HHF
27	340-18	1	Fitting-HYD, 90 DEG
27:1	237-79	1	O-Ring
27:2	237-22	1	O-Ring
28	353-508	1	Plug-HH
28:1	237-42	1	O-Ring
29	127-2535	1	Hose-ASM

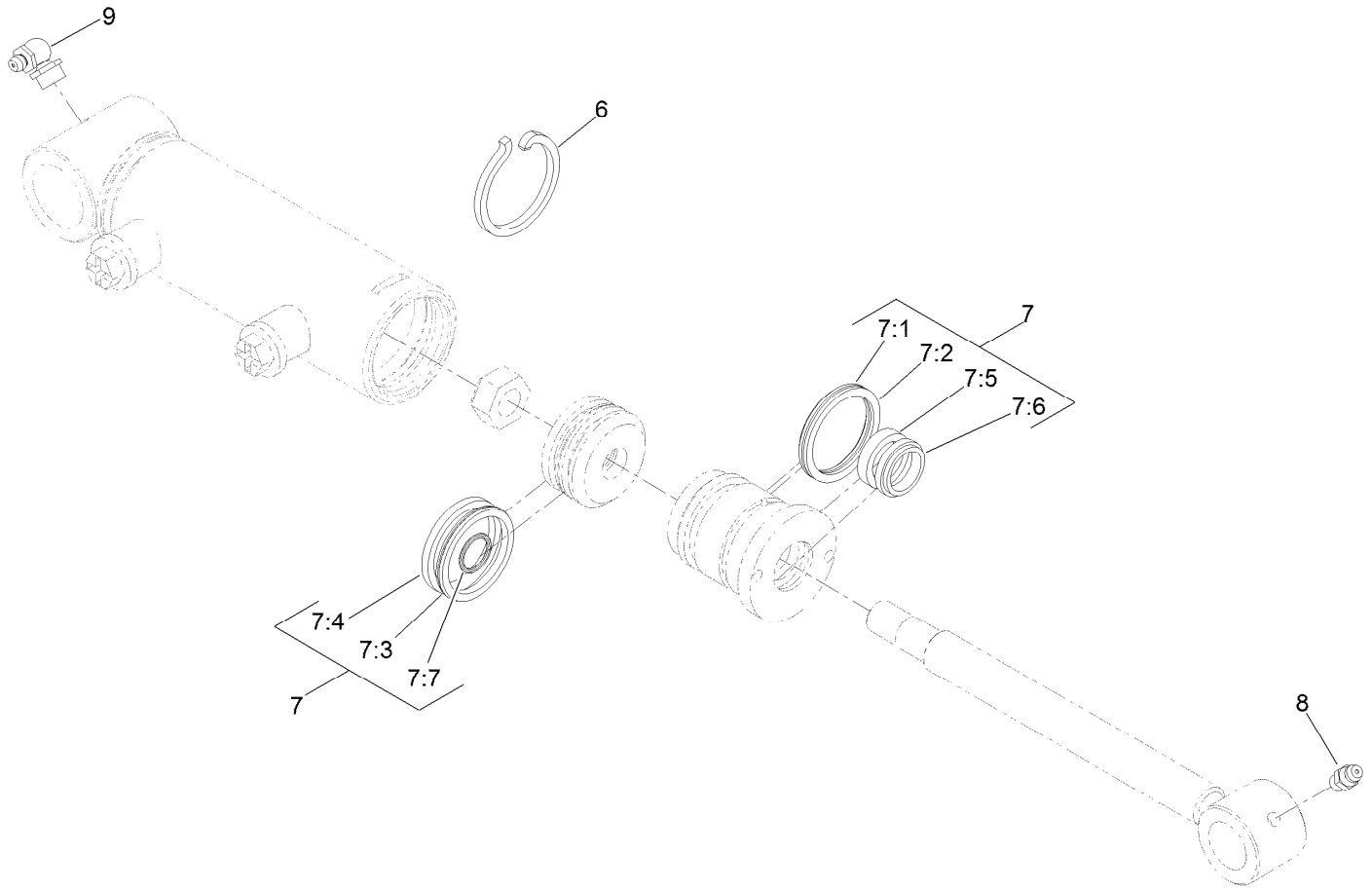

Hydraulic Cylinder Assembly No. 138-6999

Ref.	*Part Number*	*Qty.*	*Description*
6	84-1680	1	Ring-Retaining
7	133-2900	1	Seal Kit
7:1		1	O-Ring ●
7:2		1	Backup ●
7:3		1	Bp Seal ●
7:4		1	Wear Ring-Ht ●
7:5		1	Bt Seal ●
7:6		1	Dust Seal-Dt ●
7:7		1	O-Ring ●
8	302-5	1	Fitting-Grease
9	302-33	1	Fitting-Grease

● Not serviced separately

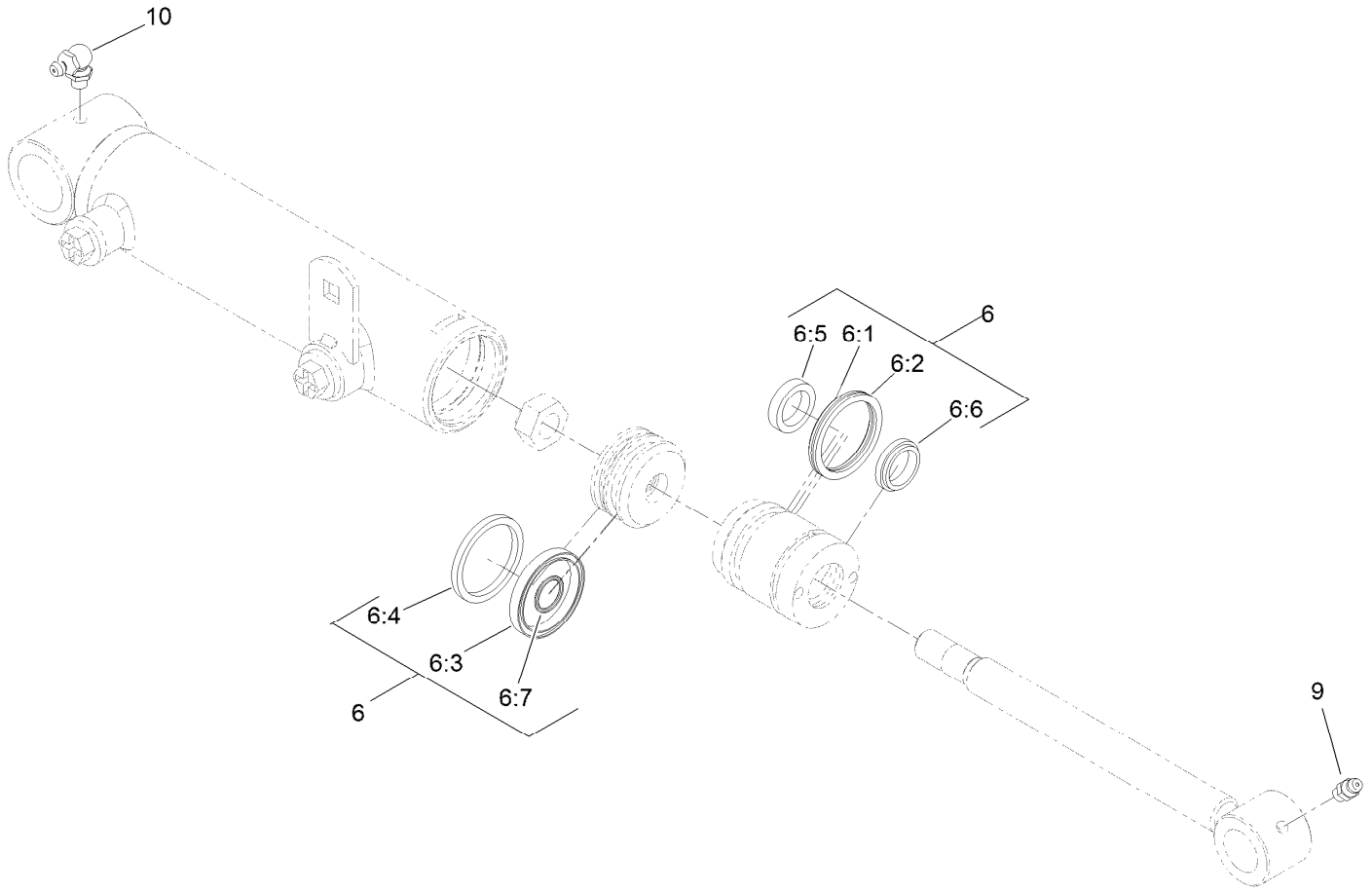

Hydraulic Cylinder Assembly No. 163-3534

Ref.	*Part Number*	*Qty.*	*Description*
6	163-3529	1	Seal Kit
6:1		1	O-Ring ●
6:2		1	Backup ●
6:3		1	Pps Seal ●
6:4		1	Wear Ring-Ht ●
6:5		1	Bt Seal ●
6:6		1	Dust Seal-Dt ●
6:7		1	O-Ring ●
9	302-5	1	Fitting-Grease
10	302-60	1	Fitting-Grease

● Not serviced separately

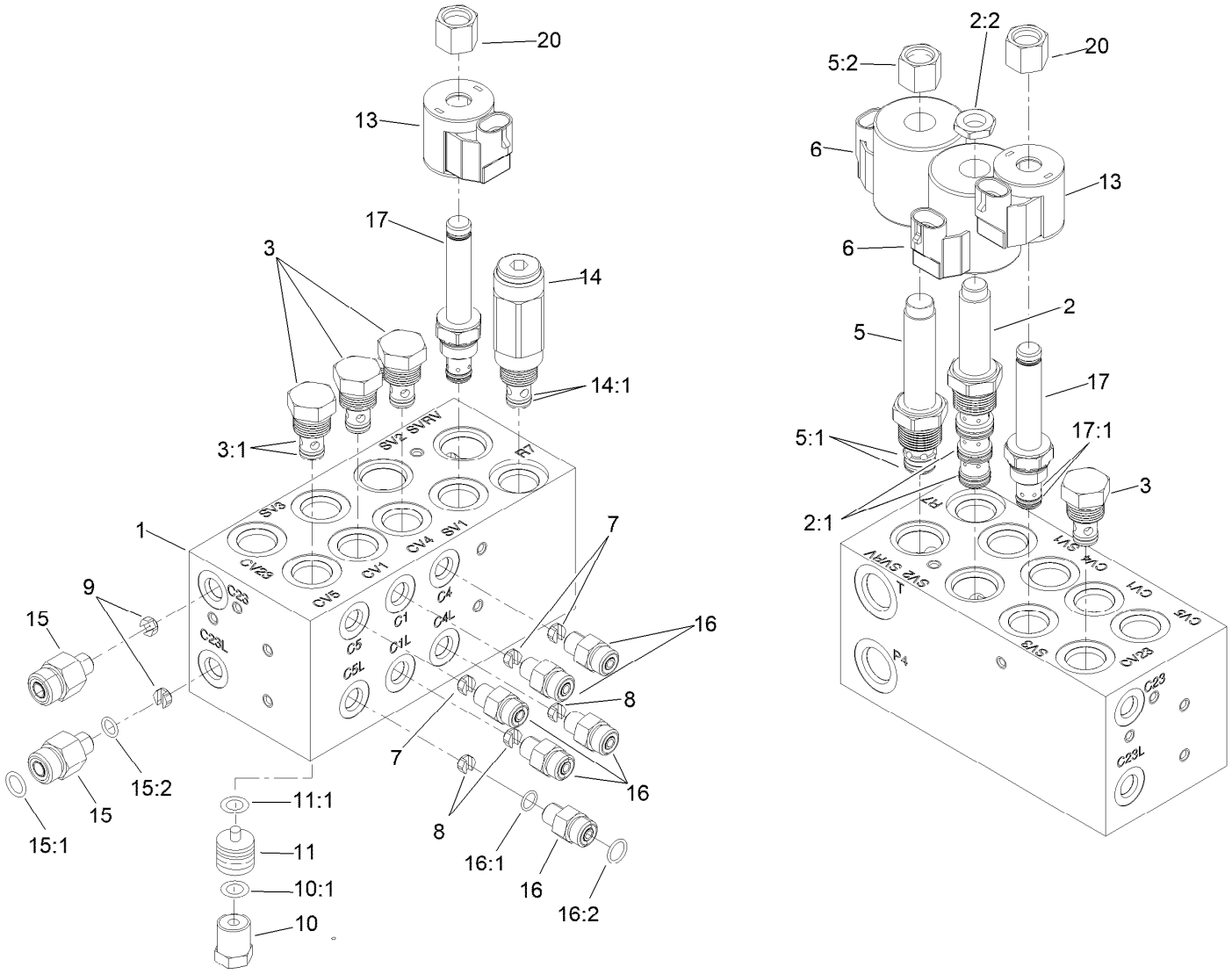

Hydraulic Manifold Block Assembly No. 105-7577

Ref.	Part Number	Qty.	Description
1		1	Block-Manifold ●
2	110-8906	1	Valve-Solenoid
2:1	110-8908	1	Spool Valve Seal Kit
2:2	110-2634	1	Nut-Coil
3	110-9006	4	Valve-Check
3:1	105-9156	1	Seal Kit
5	110-8905	1	Valve-Relief, Solenoid
5:1	110-6316	1	Seal Kit
5:2	130-8180	1	Nut-Coil (9/16-24 Unef-2B)
6	110-6344	2	Coil-12V, DC
7	110-8904	3	Orifice-Control, Flow (0.028)
8	110-8903	3	Orifice-Control, Flow (0.055)
9	110-8902	2	Orifice-Control, Flow (0.046)
10	354-70	4	Plug-Hex, Hollow
10:1	237-80	1	O-Ring

Ref.	Part Number	Qty.	Description
11	110-8901	4	Piston-Pilot
11:1	110-8900	1	O-Ring
13	110-0497	2	Coil-Solenoid
14	110-8899	1	Valve-Relief
14:1	105-9156	1	Seal Kit
15	340-88	2	Fitting-Straight
15:1	237-22	1	O-Ring
15:2	237-78	1	O-Ring
16	340-92	6	Fitting-Straight
16:1	237-78	1	O-Ring
16:2	237-21	1	O-Ring
17	147-3090	2	Valve-Solenoid
17:1	107-7527	1	Seal Kit
20	107-7812	2	Nut-Solenoid

● Not serviced separately

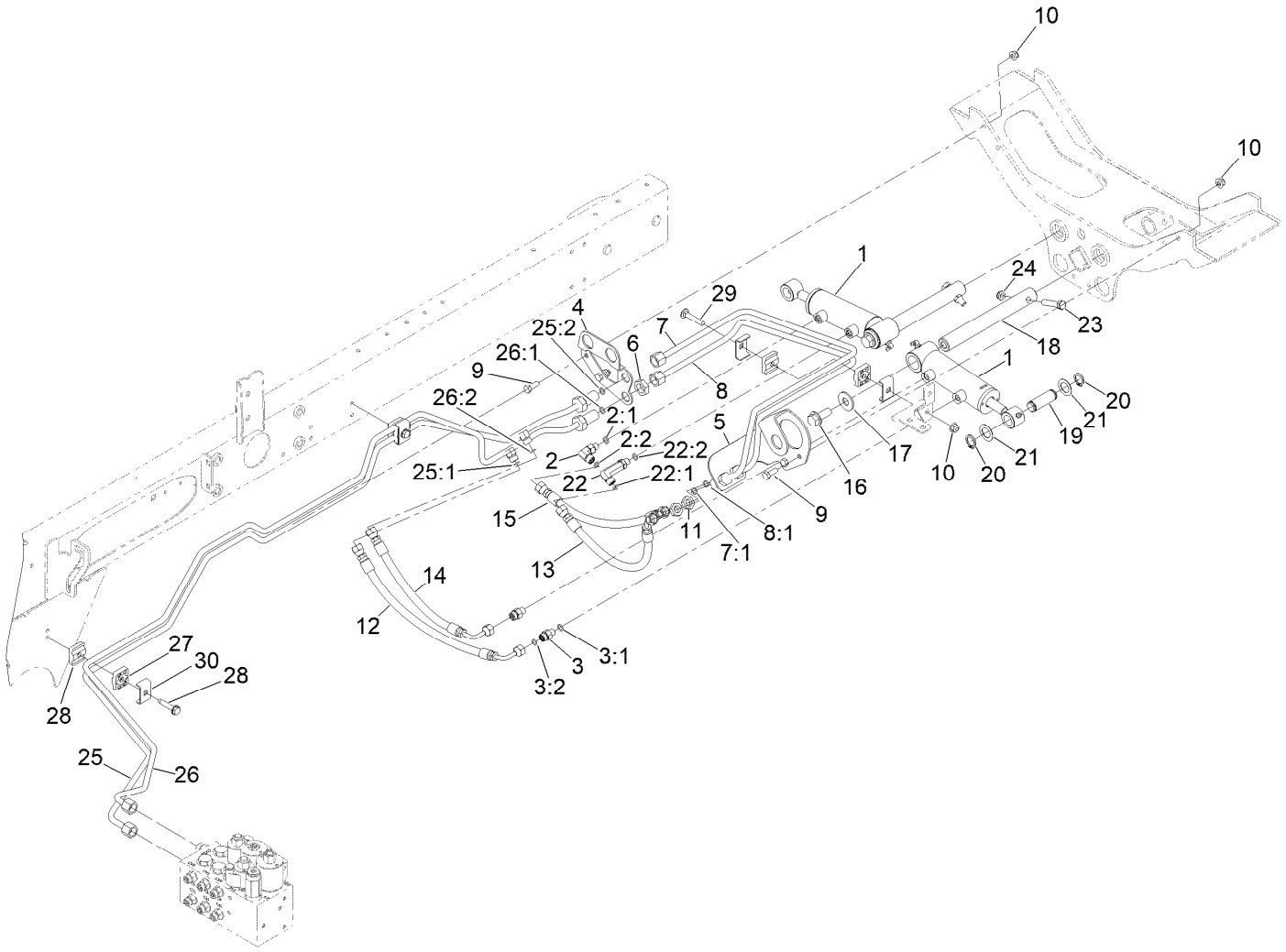

Rear Lift Hydraulic Assembly

Ref.	Part Number	Qty.	Description
1	138-6999	2	HYD Cylinder ASM
2	340-132	1	Fitting-Elbow, 90 DEG
2:1	237-78	1	O-Ring
2:2	237-21	1	O-Ring
3	340-92	2	Fitting-Straight
3:1	237-78	1	O-Ring
3:2	237-21	1	O-Ring
4	127-2568-0P	1	Bracket-Bulkhead, RH
5	127-2567-0P	1	Bracket-Bulkhead, LH
6	340-70	2	Nut-Lock
7	133-2987	1	Tube-ASM
7:1	237-21	1	O-Ring
8	133-2986	1	Tube-ASM
8:1	237-21	1	O-Ring
9	322-4	4	Screw-HH
10	104-8300	5	Nut-HF, NI
11	340-78	2	Nut-Lock
12	110-0930	1	Hose-HYD
13	110-8966	1	Hose-HYD
14	110-0929	1	Hose-HYD
15	110-0931	1	Hose-HYD

Ref.	Part Number	Qty.	Description
16	3234-38	2	Screw-HHF
17	3256-6	2	Washer-Flat
18	117-0148	2	Pin-Cylinder
19	104-0046	2	Pin-Slide, Cylinder
20	32120-93	4	Ring-Retaining
21	3-6498	4	Washer-Thrust
22	100-7695	1	Fitting-Elbow 90
22:1	237-78	1	O-Ring
22:2	237-21	1	O-Ring
23	323-9	2	Screw-HH
24	3296-59	2	Nut-Lock, NI
25	145-2555	1	Hydraulic Tube ASM
25:1	237-21	1	O-Ring
25:2	237-22	1	O-Ring
26	145-2554	1	Hydraulic Tube ASM
26:1	237-21	1	O-Ring
26:2	237-22	1	O-Ring
27	32144-57	2	Screw
28	56-7973	6	Clamp-Tube
29	3230-5	1	Bolt-CARR
30	119-1418	4	Plate-Clamp, Short

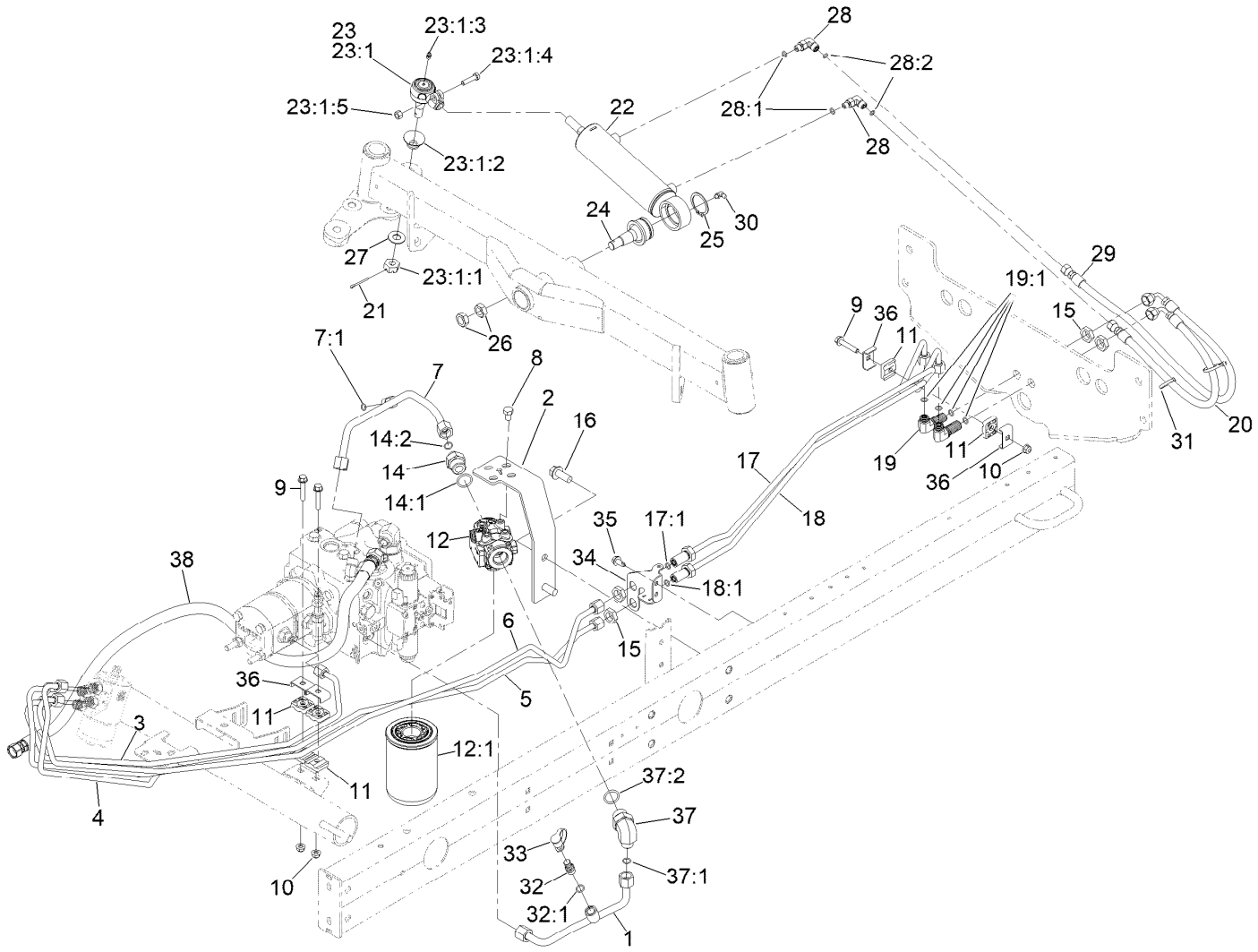

Steering Hydraulic Assembly

Ref.	Part Number	Qty.	Description
1	144-2057	1	Tube ASM-Hydraulic
2	144-2086-0P	1	Bracket-Mount, Filter
3	144-2070	1	Tube ASM-Hydraulic
4	144-2079	1	Hydraulic Tube ASM
5	144-2072	1	Tube ASM-Hydraulic
6	144-2073	1	Tube ASM-Hydraulic
7	139-6047	1	Tube ASM-Hydraulic
7:1	237-22	1	O-Ring
8	33115-016	4	Screw-HH
9	94-5780	3	Screw-HWH
10	104-8300	3	Nut-HF, NI
11	56-7973	6	Clamp-Tube
12	93-2242	1	Oil Filter ASM
12:1	75-1310	1	Filter-HYD
14	100-4240	1	Fitting-STR
14:1	237-30	1	O-Ring
14:2	237-81	1	O-Ring
15	340-70	4	Nut-Lock

Ref.	Part Number	Qty.	Description
16	3234-38	2	Screw-HHF
17	136-3729	1	Hydraulic Tube ASM
17:1	237-22	1	O-Ring
18	127-2338	1	Tube ASM
18:1	237-22	1	O-Ring
19	340-154	2	Union-Bulkhead
19:1	237-22	2	O-Ring
20	110-0928	1	Hose-HYD
21	3272-12	1	Pin-Cotter
22	110-9035	1	HYD Cylinder ASM
23	106-6895-03	1	Ball Joint ASM
23:1		1	Joint-Ball ●
23:1:1	32136-13	1	Nut-SHH
23:1:2	106-6896	1	Seal
23:1:3	302-5	1	Fitting-Grease
23:1:4	3210-7	1	Screw-HH
23:1:5	32152-5	1	Nut-Hex
24	106-6774	1	Joint-Ball

● Not serviced separately

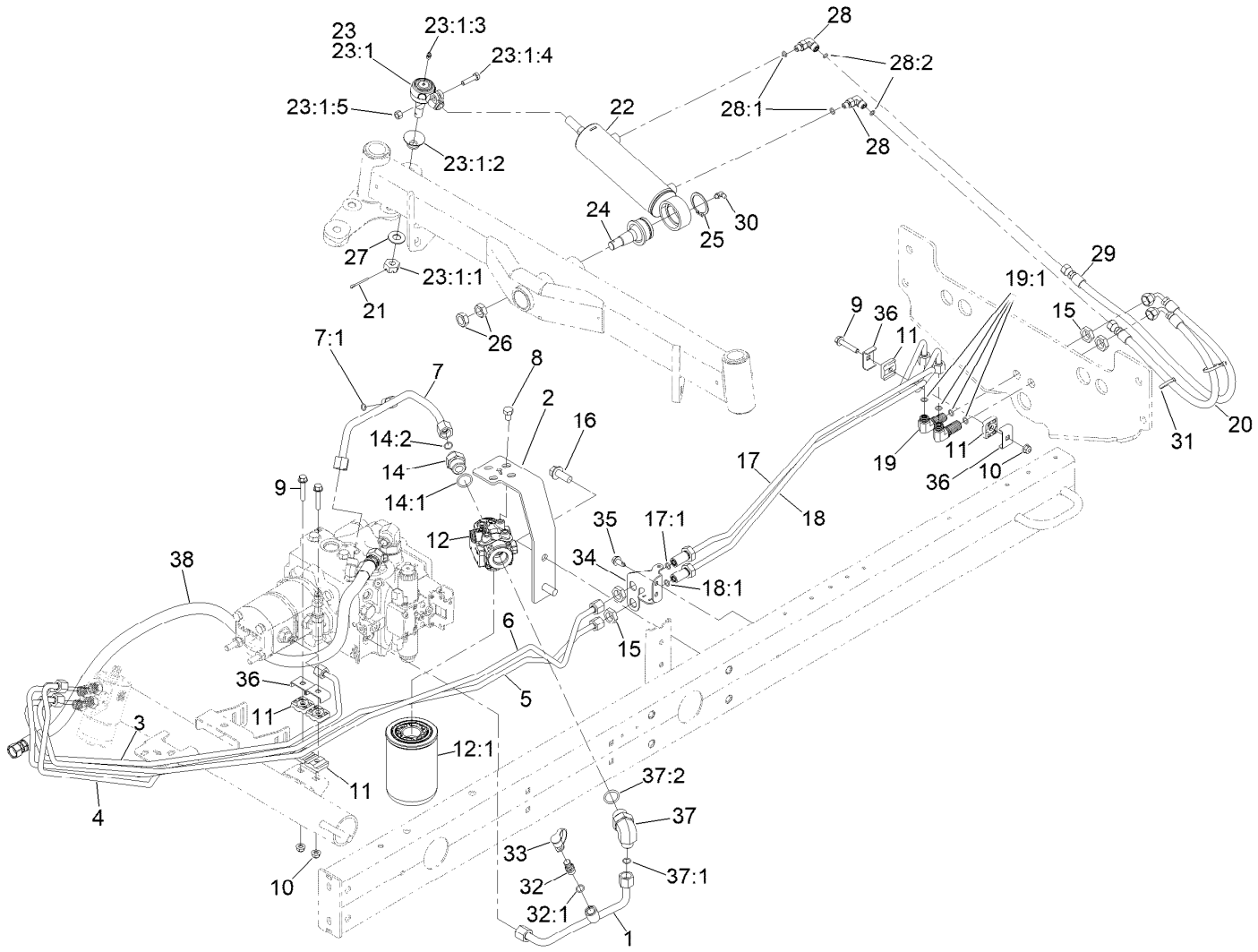

Steering Hydraulic Assembly (continued)

Ref.	Part Number	Qty.	Description
25	32151-104	1	Ring-Retaining, External
26	3220-6	2	Nut-Jam
27	69-8980	1	Washer
28	340-132	2	Fitting-Elbow, 90 DEG
28:1	237-78	1	O-Ring
28:2	237-21	1	O-Ring
29	110-0973	1	Hose-HYD
30	302-40	1	Fitting-Grease, 90 DEG
31	3290-378	2	Tie-Cable
32	59-7410	1	Fitting-Diagnostic

Ref.	Part Number	Qty.	Description
32:1	237-42	1	O-Ring
33	353-947	1	Cap-Dust, Black
34	127-2341-0P	1	Brkt-Bulkhead, Steer
35	32104-32	2	Screw-HWH
36	119-1418	4	Plate-Clamp, Short
37	340-131	1	Fitting-HYD, 90 DEG
37:1	237-30	1	O-Ring
37:2	237-81	1	O-Ring
38	144-2077	1	Hose ASM-Hydraulic

● Not serviced separately

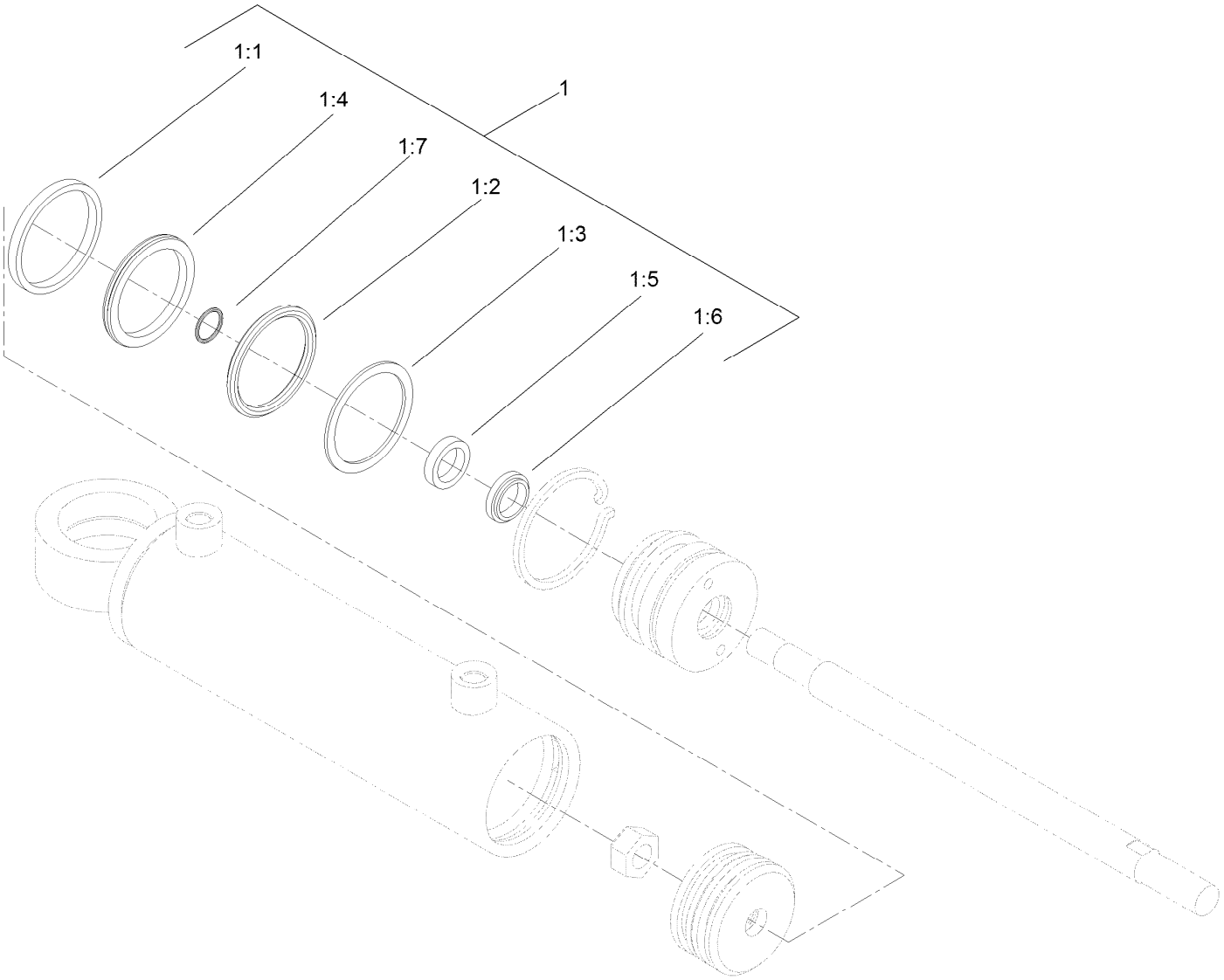

Hydraulic Cylinder Assembly No. 110-9035

Ref.	*Part Number*	*Qty.*	*Description*
1	114-8875	1	Seal Kit
1:1		1	O-Ring ●
1:2		1	Backup ●
1:3		1	Bp Seal ●
1:4		1	Wear Ring ●
1:5		1	Bt Seal ●
1:6		1	Dust Seal ●
1:7		1	O-Ring ●

● Not serviced separately

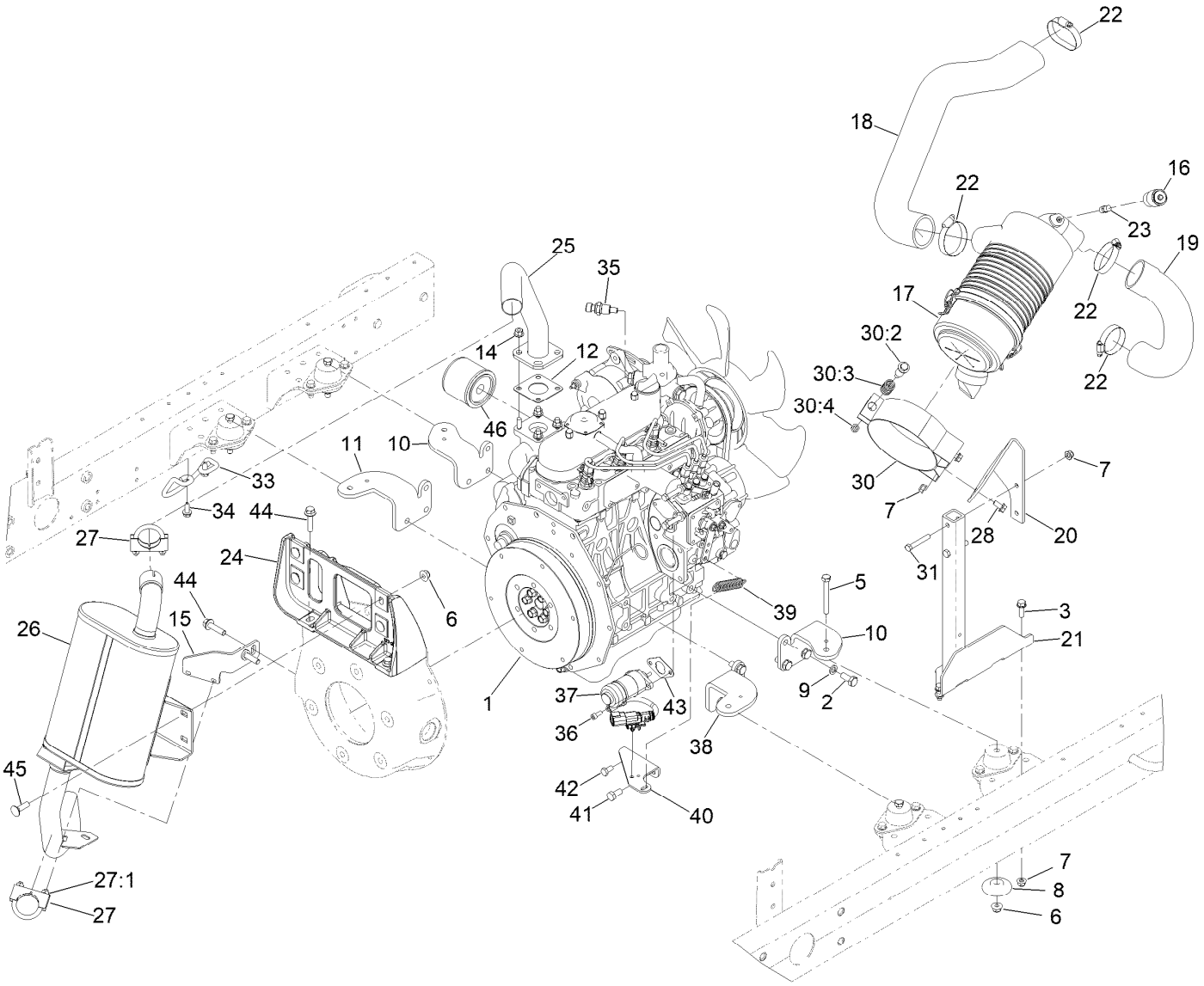

Engine, Air Cleaner and Muffler Assembly

Ref.	Part Number	Qty.	Description
1	145-2806	1	Engine-Kubota, D1105
2	43-0090	12	Screw-HH
3	3234-29	3	Screw-HHF
5	323-14	4	Screw-HH
6	104-8301	8	Nut-HF, NI
7	104-8300	7	Nut-HF, NI
8	138-6462	4	Support-Isolator
9	48-9590	12	Washer-Lock
10	115-8066-0P	2	Mount-Engine
11	115-8063-0P	1	Mount-Engine RH
12	99-8343	1	Gasket-Muffler
14	104-2612	4	Nut-HF
15	147-6082-0P	1	Bracket-Tailpipe
16	93-9164	1	Indicator-Mini
17	106-5277	1	Air Cleaner ASM
18	127-2696	1	Hose-Formed
19	117-5164	1	Hose-Formed
20	127-2695-0P	1	Bracket-Air Cleaner
21	121-5610-0P	1	Stand W.A. Air Cleaner (Welded)
22	2412-130	4	Clamp-Hose

Ref.	Part Number	Qty.	Description
23	94-1416	1	Adapter-Indicator
24	127-2550	1	Bracket-Muffler
25	127-2698	1	Header-Exhaust
26	127-2503	1	Muffler-Exhaust
27	2112-9	2	Clamp
27:1	32128-20	2	Nut-HF
28	3234-14	2	Screw-HHF
30	100-4825	1	Band-Mounting, Air Cleaner
30:2	94-3653	1	Bolt
30:3	94-3654	1	Spring
30:4	33024-00	1	Nut-Lock, NI
31	322-10	2	Screw-HH
33	127-2612	1	Guard-Pipe, Tail
34	32104-32	2	Screw-HWH
35	119-4478	1	Sender-Temperature
36	105-2409	2	Screw-HSH
37	125-1562	1	Actuator-Fuel
38	115-8068-0P	1	Mount-Engine, LH
39	107-1045	1	Spring-Extension
40	125-1472-0P	1	Bracket-Spring, Throttle
41	63-7790	1	Screw-Cap

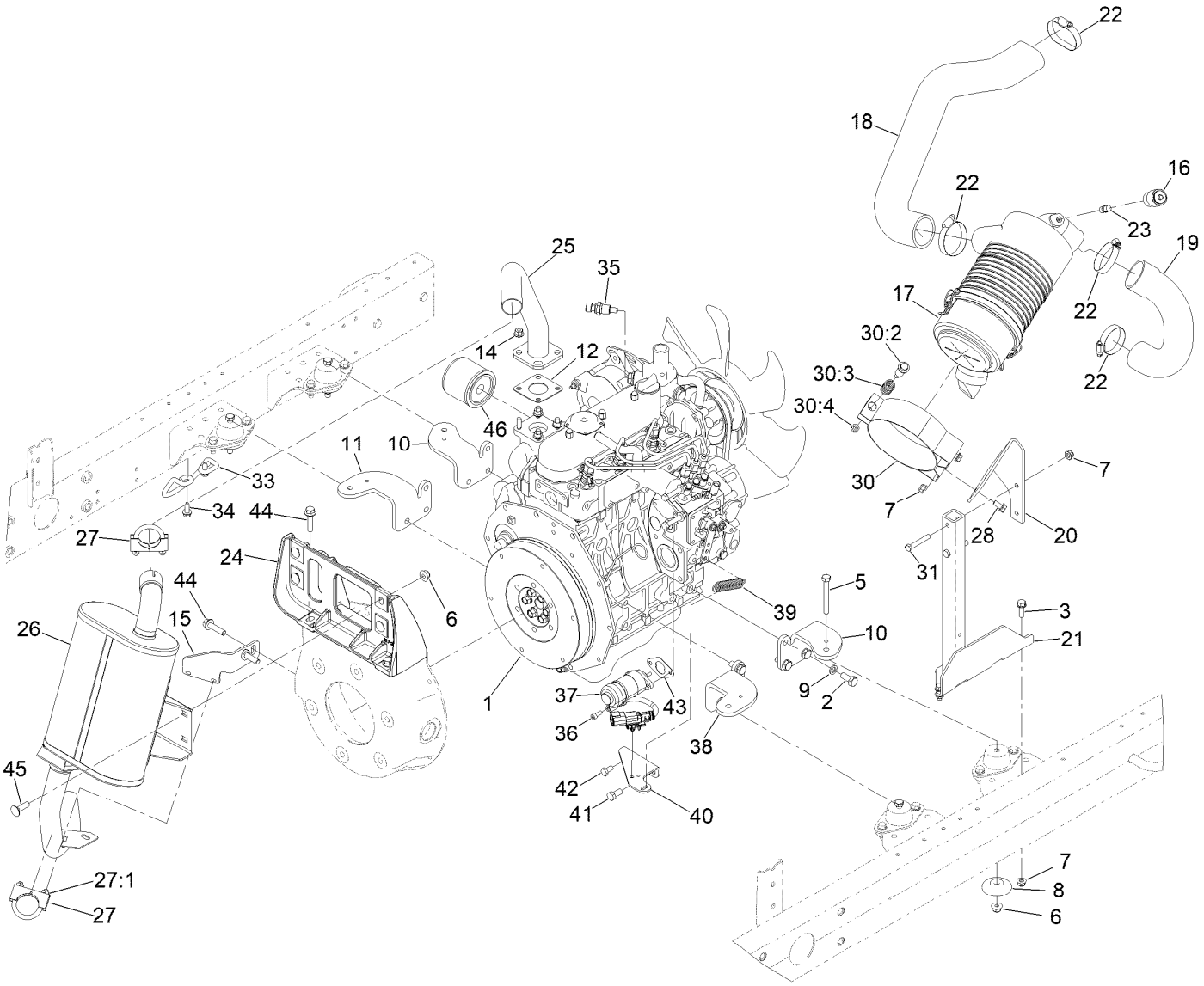

Engine, Air Cleaner and Muffler Assembly (continued)

Ref.	Part Number	Qty.	Description
42	33114-016	1	Screw-HH
43	127-2507	1	Gasket-Actuator, Fuel (F/W Actuator)
44	114-4681	6	Screw-HHF
45	3231-25	4	Bolt-CARR
46	108-3841	1	Filter-Oil

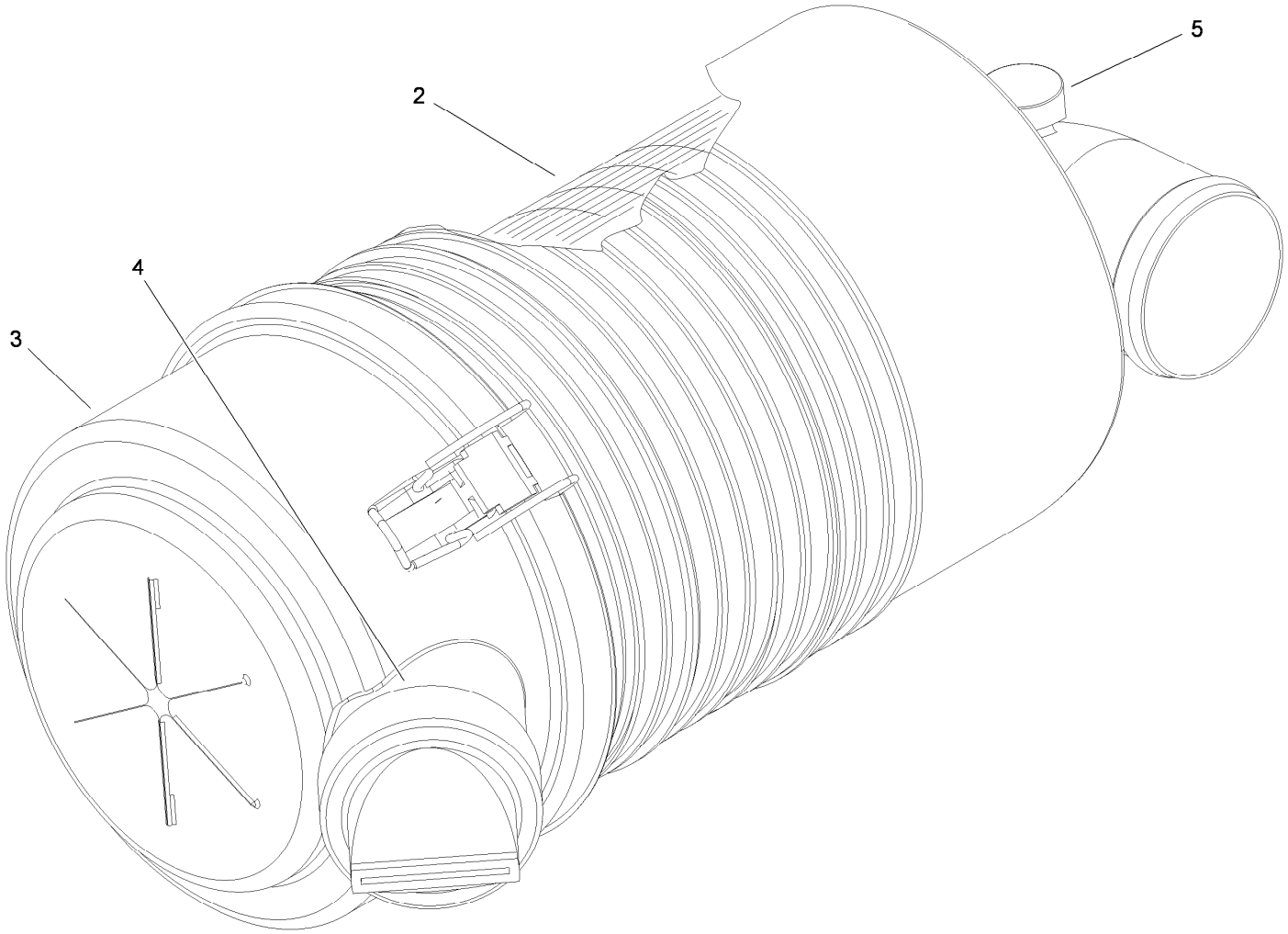

Air Cleaner Assembly No. 106-5277

Ref.	*Part Number*	*Qty.*	*Description*
2	108-3810	1	Filter-Air
3	98-9771	1	Cover ASM
4	87-9400	1	Valve-Vacuator
5	285-17	1	Plug-Pipe

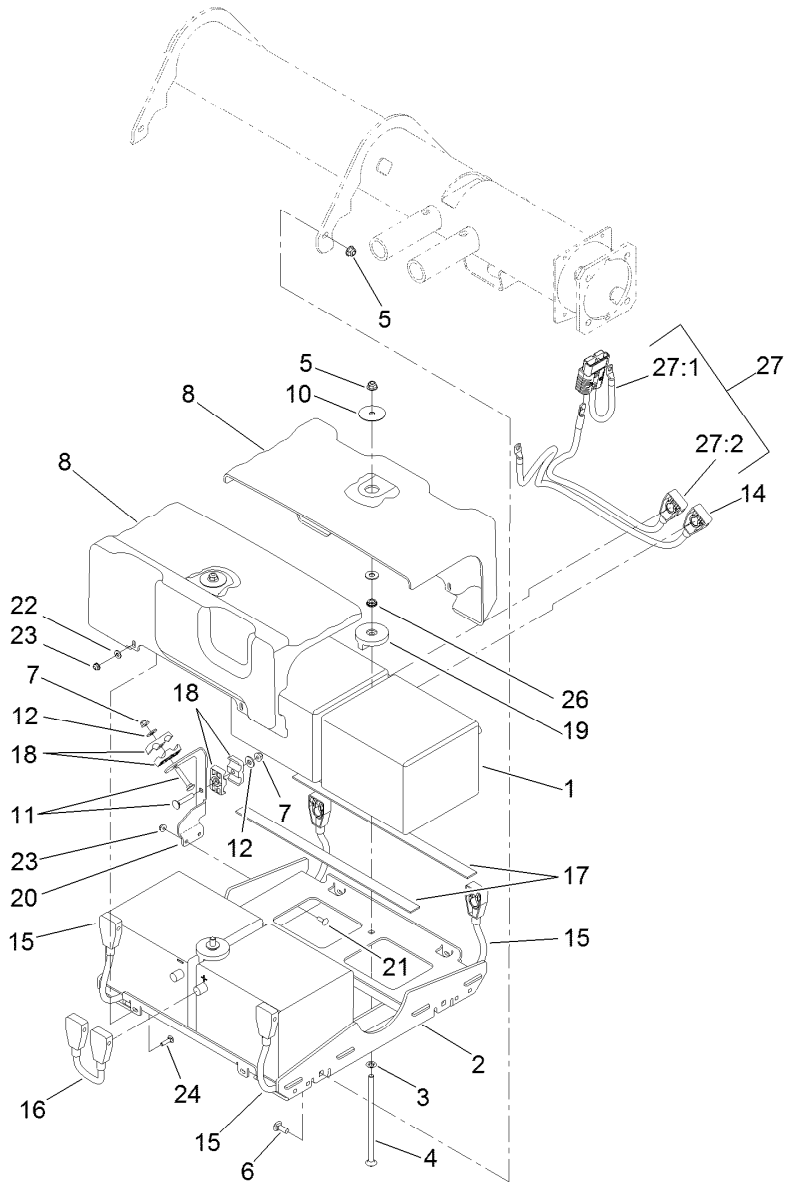

48 Volt Battery Assembly

Ref.	Part Number	Qty.	Description
1	136-3726	4	Battery-12V Agm 35-650
2	136-3708-01	1	Tray ASM [red]
3	107-3154	2	Nut-Push
4	120-4743	2	Screw-CARR
5	104-8301	6	Nut-HF, NI
6	3231-2	4	Bolt-CARR
7	104-8300	2	Nut-HF, NI
8	136-3709	2	Cover-Battery
10	120-2229	2	Washer
11	3230-7	2	Bolt-CARR
12	3256-3	2	Washer-Flat
14	122-3550	1	Cable-Battery, Bk ASM
15	122-0133	2	Positive Battery Cable ASM
16	122-0134	1	Jumper-Cable-Battery (Positive)

Ref.	Part Number	Qty.	Description
17	127-2306	4	Strip-Foam
18	56-7974	4	Clamp-Tube
19	127-2393	2	Hold Down-Battery
20	127-2517-01	1	Bracket-Cable
21	3229-1	2	Screw-CARR
22	3256-78	4	Washer-Flat
23	104-7201	6	Nut-HF, NI
24	3229-2	4	Screw-CARR
26	3217-7	2	Nut-Hex
27	122-3700	1	Cable-Battery
27:1	122-0267	1	Positive Battery Cable ASM
27:2	122-3551	1	Cable-Battery, Rd ASM

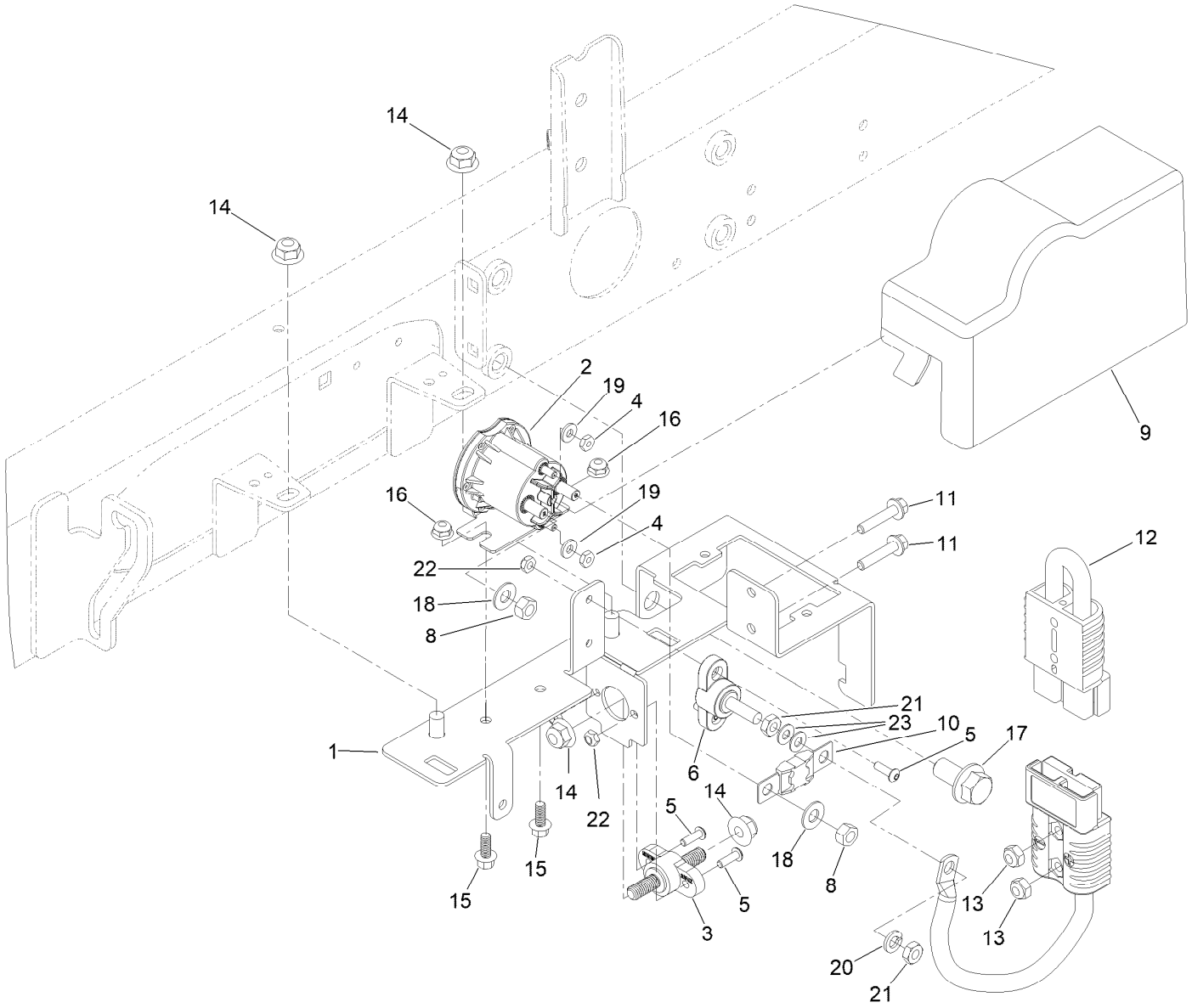

48 Volt Contactor Assembly

Ref.	Part Number	Qty.	Description
1	145-2452	1	Bracket ASM, 48V
2	122-2640	1	Contactor-DC, 48V
3	122-2411	1	Block-Junction, Black
4	3219-14	2	Nut-Hex
5	3274-39	4	Screw-HSBH
6	122-3514	1	Block-Junction, 5/16-18
8	3219-2	2	Nut-Hex
9	145-2465	1	Cover-Electrical
10	127-2305	1	Fuse-250 Amp
11	127-8639	2	Screw-HHF
12	122-0136	1	Cable-Battery, Positive Jumper ASM

Ref.	Part Number	Qty.	Description
13	3296-16	2	Nut-Lock, NI
14	104-8301	4	Nut-HF, NI
15	99-6810	2	Screw-HHF
16	104-7201	2	Nut-HF, NI
17	3234-6	1	Screw-HHF
18	107-0279	2	Washer
19	3256-14	2	Washer-Flat
20	3253-4	1	Washer-Lock
21	3218-2	1	Nut-Hex Jam
22	3296-12	4	Nut-Lock, NI
23	120-9683	2	Washer-Plain

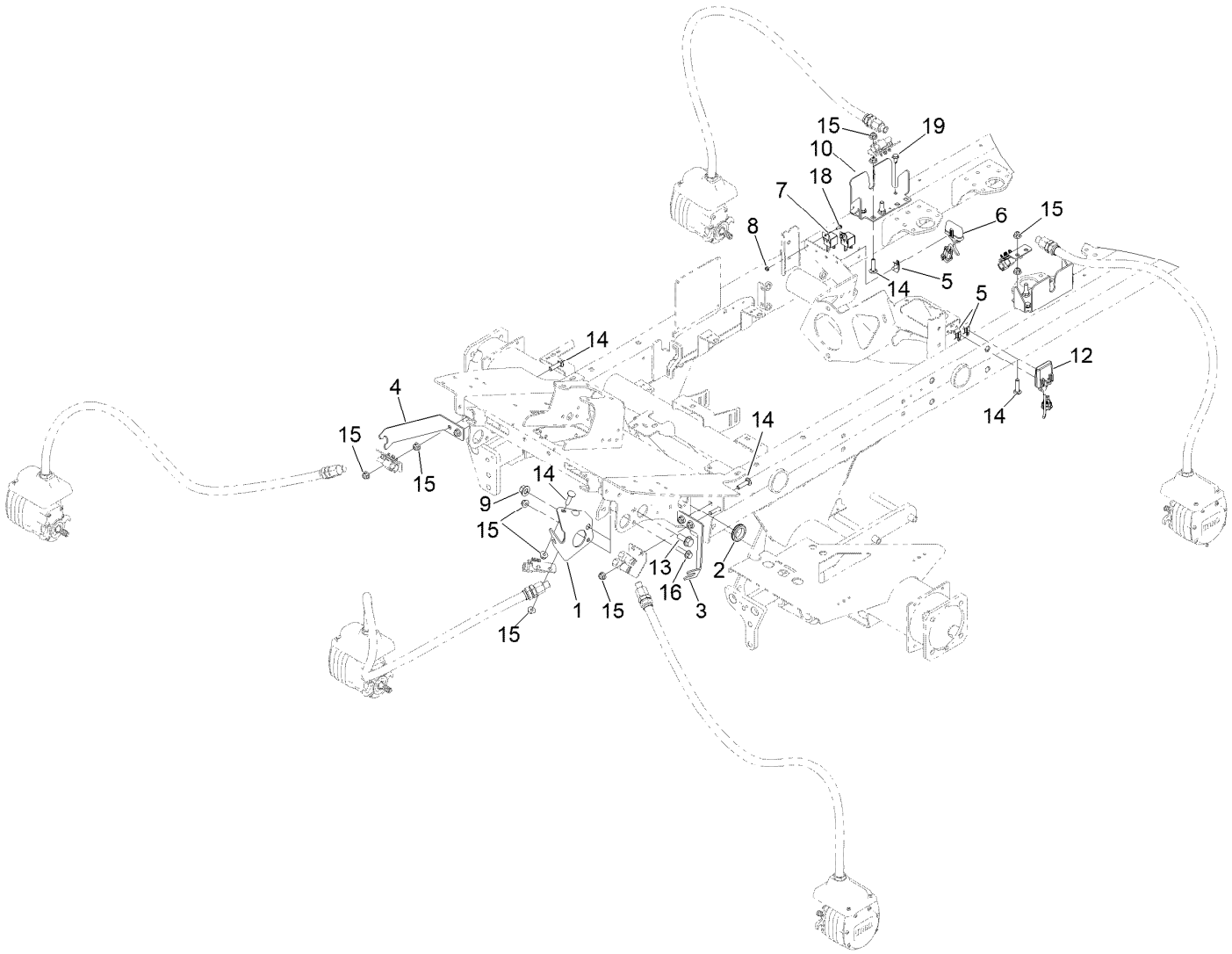

Reel Motor Plumbing Assembly

Ref.	Part Number	Qty.	Description
1	125-1460-01	1	Bracket-Bulkhead, Center
2	240-3	2	Grommet-Rubber
3	127-2314-01	1	Bracket-Bulkhead
4	127-2317-01	1	Bracket-Bulkhead
5	32180-011	3	Clip-Connector
6	112-9630	1	Module-Reel, I.D.
7	99-7435	2	Relay
8	3296-2	2	Nut-Lock, NI
9	99-5107	1	Nut-HF Nylock
10	125-1458-03	2	Bracket-Bulkhead, Rear
12	119-4330	1	Isolated Can Module ASM
13	3234-38	1	Screw-HHF
14	127-2351	10	Screw-CARR
15	104-8301	16	Nut-HF, NI
16	114-4681	1	Screw-HHF
18	3290-321	2	Screw-HWH
19	32104-32	4	Screw-HWH

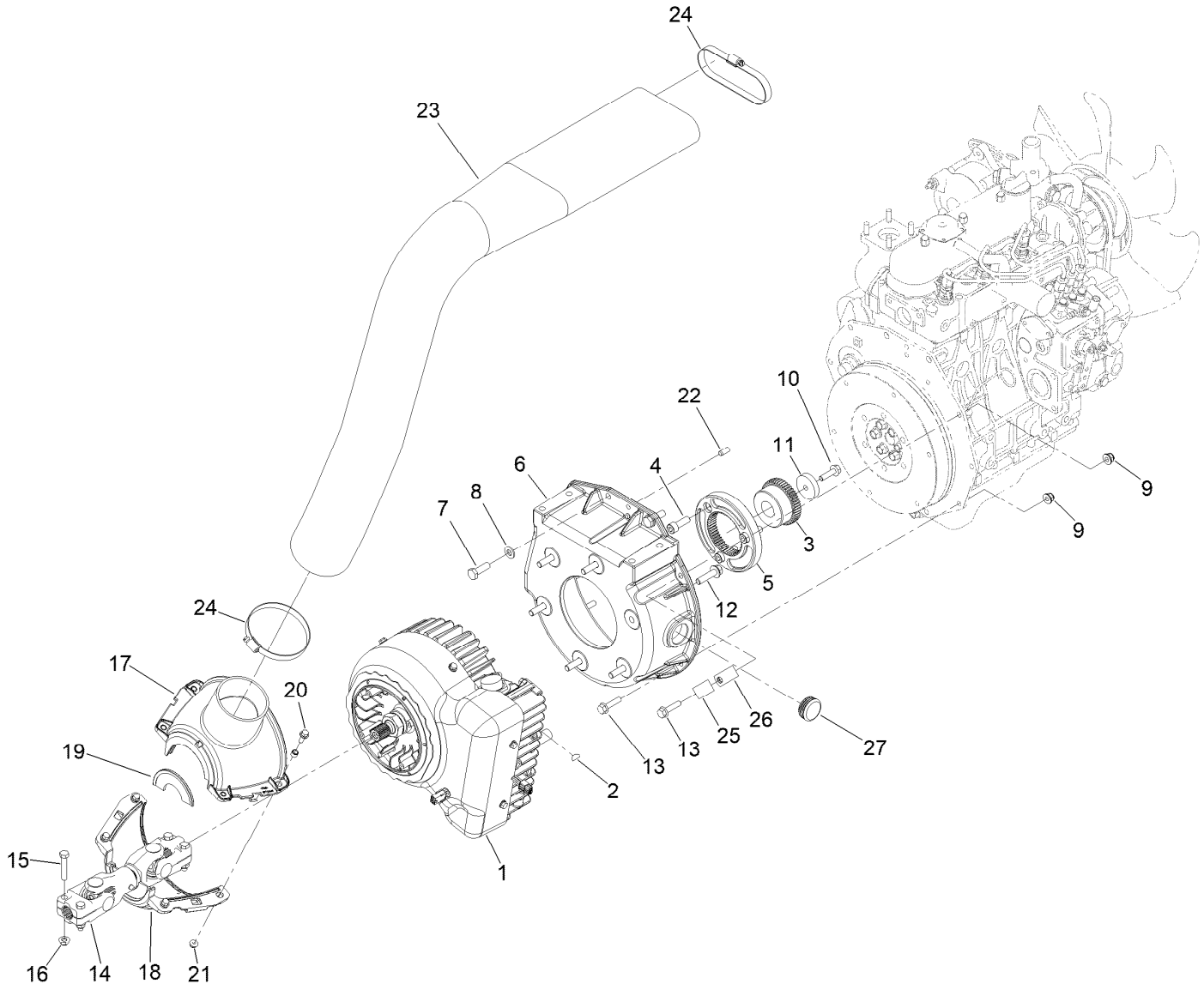

Generator And Drive Shaft Assembly

Ref.	Part Number	Qty.	Description
1	127-2655	1	Generator/Controller ASM
2	127-2318	1	Key-Woodruff
3	127-2635	1	Hub-Coupler
4	108-1420	3	Screw-HSH
5	125-1179	1	Flange-Coupler
6	127-2380	1	Bellhousing
7	95-8812	2	Screw-HH
8	3256-80	2	Washer-Plain
9	104-3082	2	Nut-Lock, HHF
10	AU100874	1	Screw-HHF
11	127-2374	1	Collar
12	114-4681	6	Screw-HHF
13	33104-035	7	Screw-HHF
14	139-6044	1	Driveshaft ASM

Ref.	Part Number	Qty.	Description
15	323-9	4	Screw-HH
16	104-8301	4	Nut-HF, NI
17	127-2465	1	Shroud ASM
18	127-2442	1	Shroud-Intake, Bottom
19	127-2434	2	Seal-Brush
20	120-9678	4	Screw-HHF
21	104-7201	4	Nut-HF, NI
22	87-1910	2	Pin-Dowel
23	161-8388	1	Hose-Intake, Formed
24	2412-46	2	Clamp
25	2412-39	1	Clamp-R
26	2412-41	1	Clamp-R
27	110-9012	1	Caplug

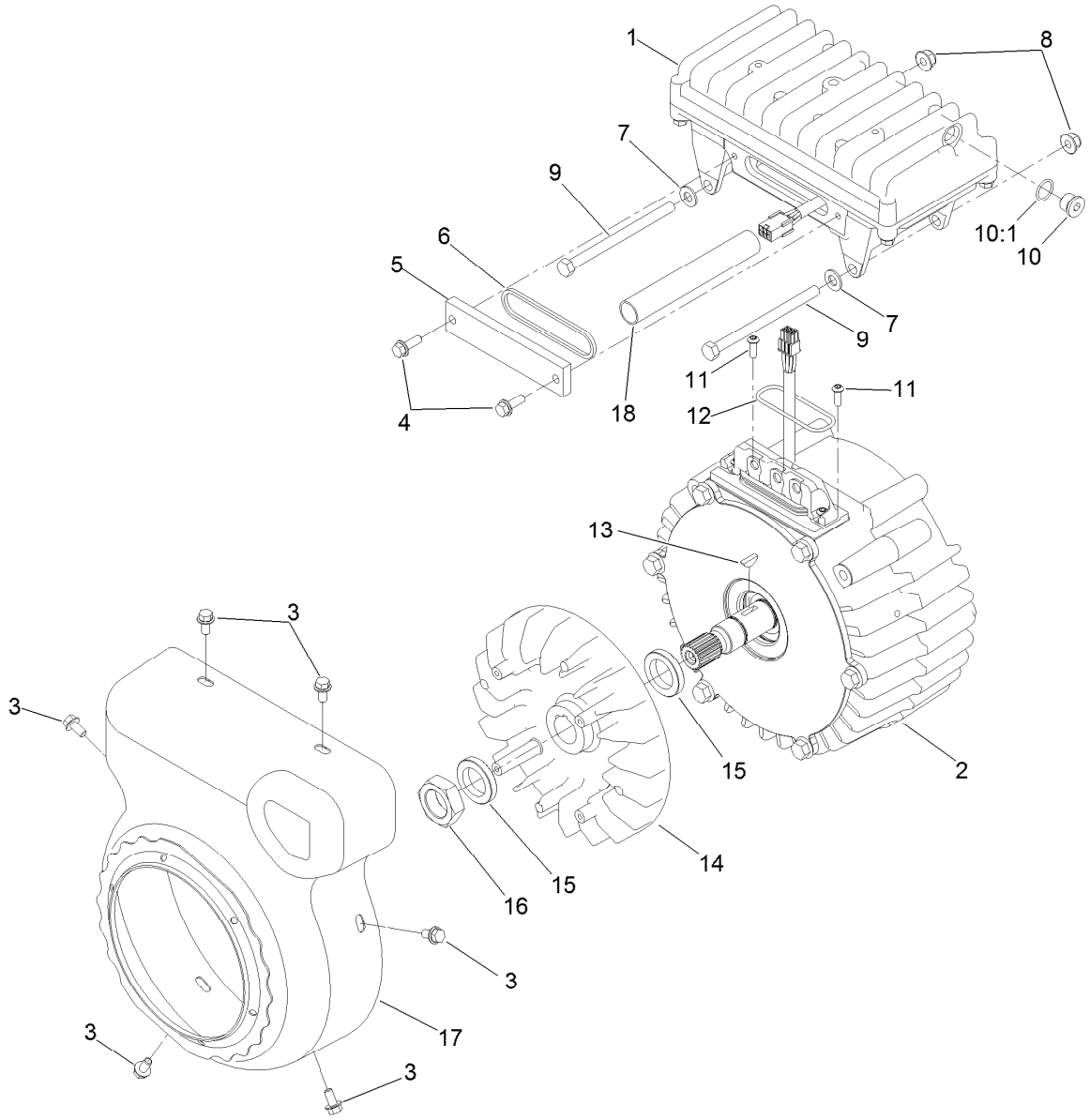

Generator/Controller Assembly No. 127-2655

Ref.	*Part Number*	*Qty.*	*Description*
1	117-8181	1	Controller ASM
2	127-2653	1	Generator Service ASM
3	119-1065	6	Screw-Lock,HF
4	119-1138	2	Screw-HHF,Patch
5	120-4511	1	Cover-Access
6	120-4513	1	Gasket-Cover, Access
7	3256-23	2	Washer-Plain
8	104-8300	2	Nut-HF, NI
9	322-38	2	Screw-HH
10	353-989	1	Plug-Hex, Hollow

Ref.	*Part Number*	*Qty.*	*Description*
10:1	237-42	1	O-Ring
11	119-7568	2	Screw-HSBH
12	117-8176	1	O-Ring
13	127-2318	1	Key-Woodruff
14	125-1188	1	Fan-Generator
15	125-1185	2	Spacer
16	125-1187	1	Nut
17	127-2444	1	Cover-Generator
18	127-2747	1	Sleeve-Harness, Expandable

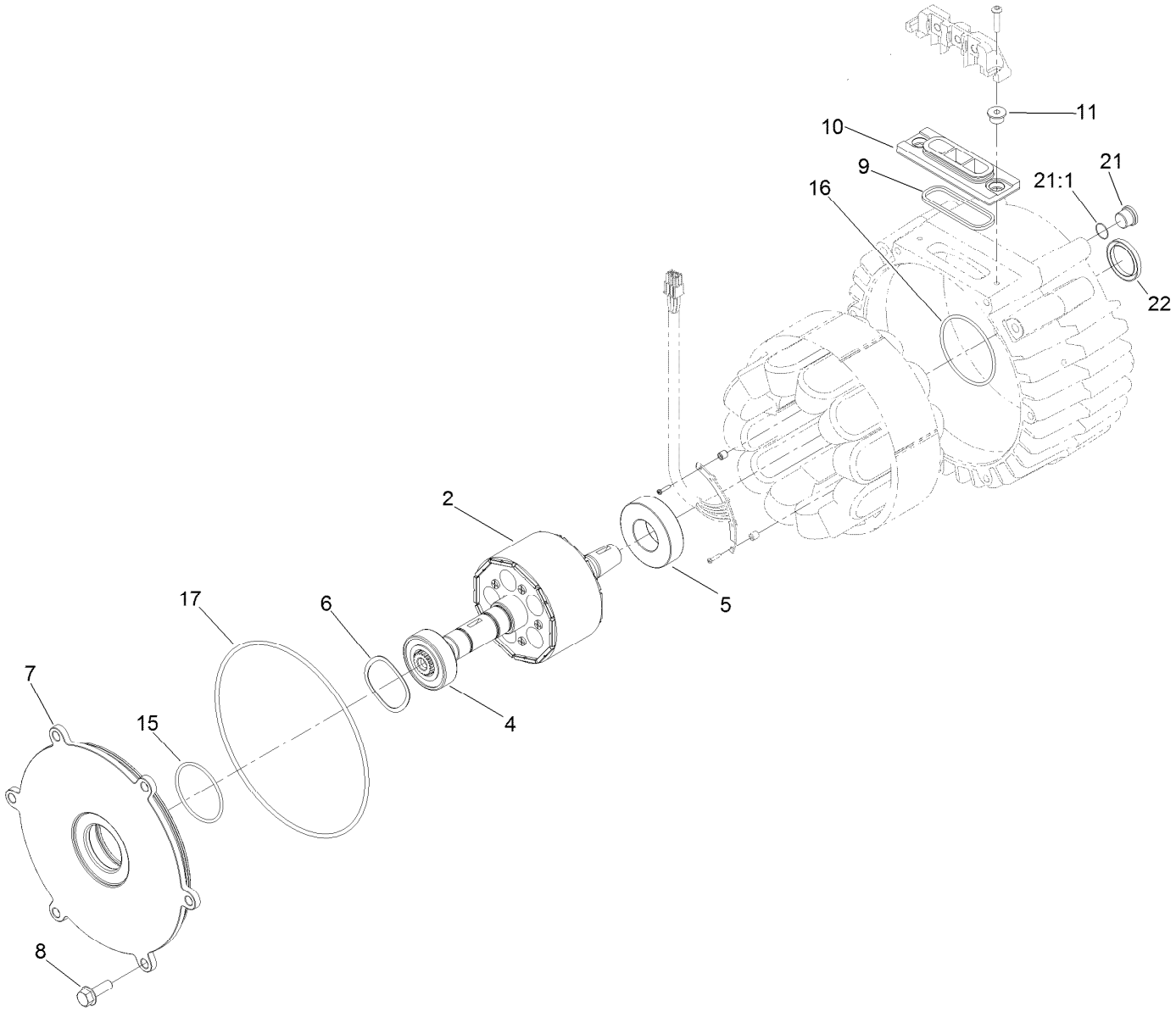

Generator Assembly No. 127-2653

Ref.	*Part Number*	*Qty.*	*Description*
2	127-2651	1	Rotor
4	120-4621	1	Bearing
5	120-4622	1	Bearing
6	117-8148	1	Washer-Wave
7	117-4514	1	Cover-Generator
8	33104-025	6	Screw-HHF
9	120-4518	1	Gasket-Isolator
10	112-5155	1	Isolator-Thermal
11	117-4501	2	Spacer-Shoulder
15	107-3244	1	O-Ring
16	117-8177	1	O-Ring
17	112-5199	1	O-Ring
21	353-989	1	Plug-Hex, Hollow
21:1	237-42	1	O-Ring
22	125-1509	1	Seal

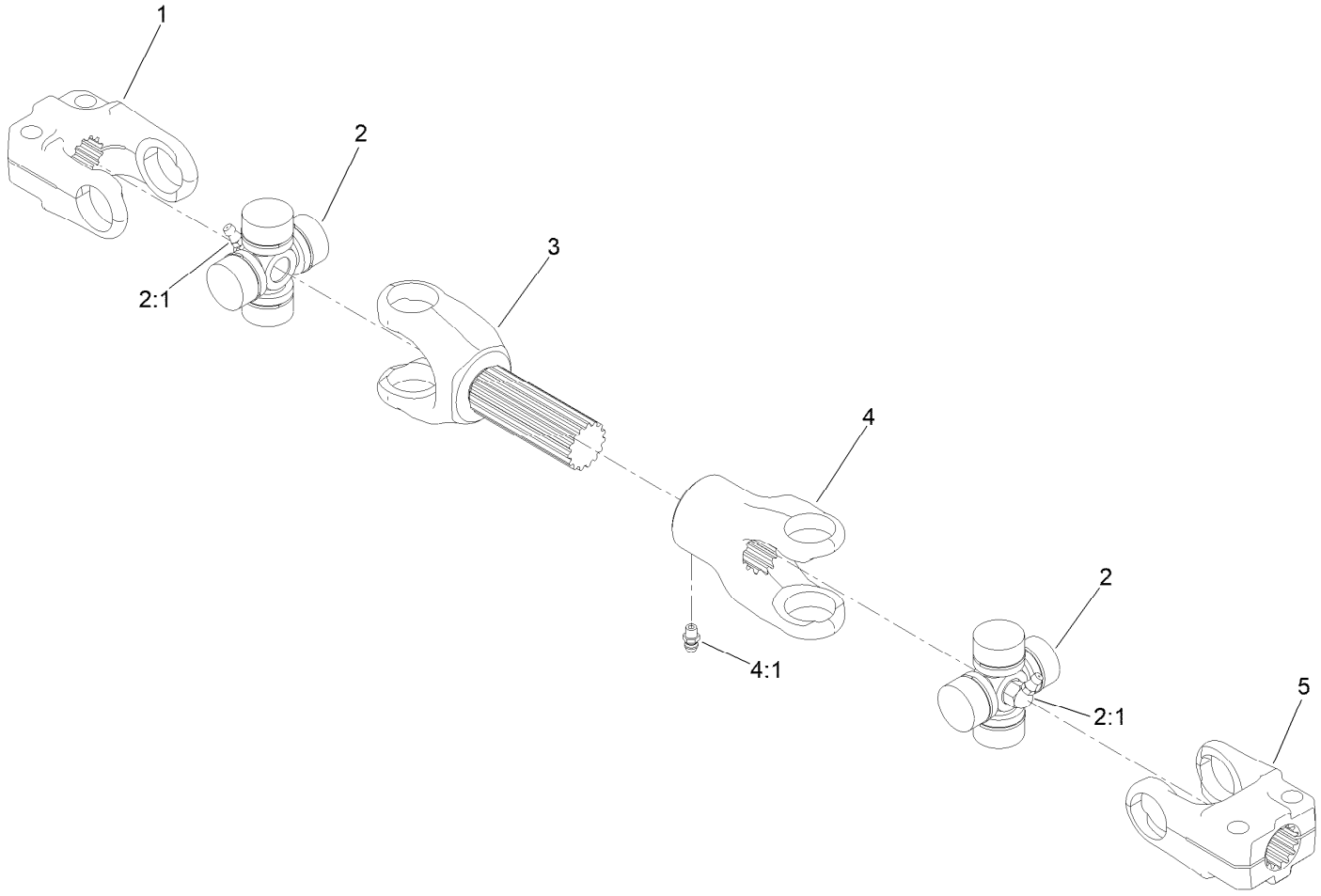

Driveshaft Assembly No. 139-6044

Ref.	*Part Number*	*Qty.*	*Description*
1	54-9040	1	Yoke-End
2	112-1687	2	Cross And Bearing Kit
2:1	62-3820	1	Fitting-Grease
3	127-2553	1	Yoke-Shaft
4	127-2554	1	Yoke-Telescoping
4:1	302-22	1	Fitting-Grease
5	145-2535	1	Yoke-Driveshaft, 13T

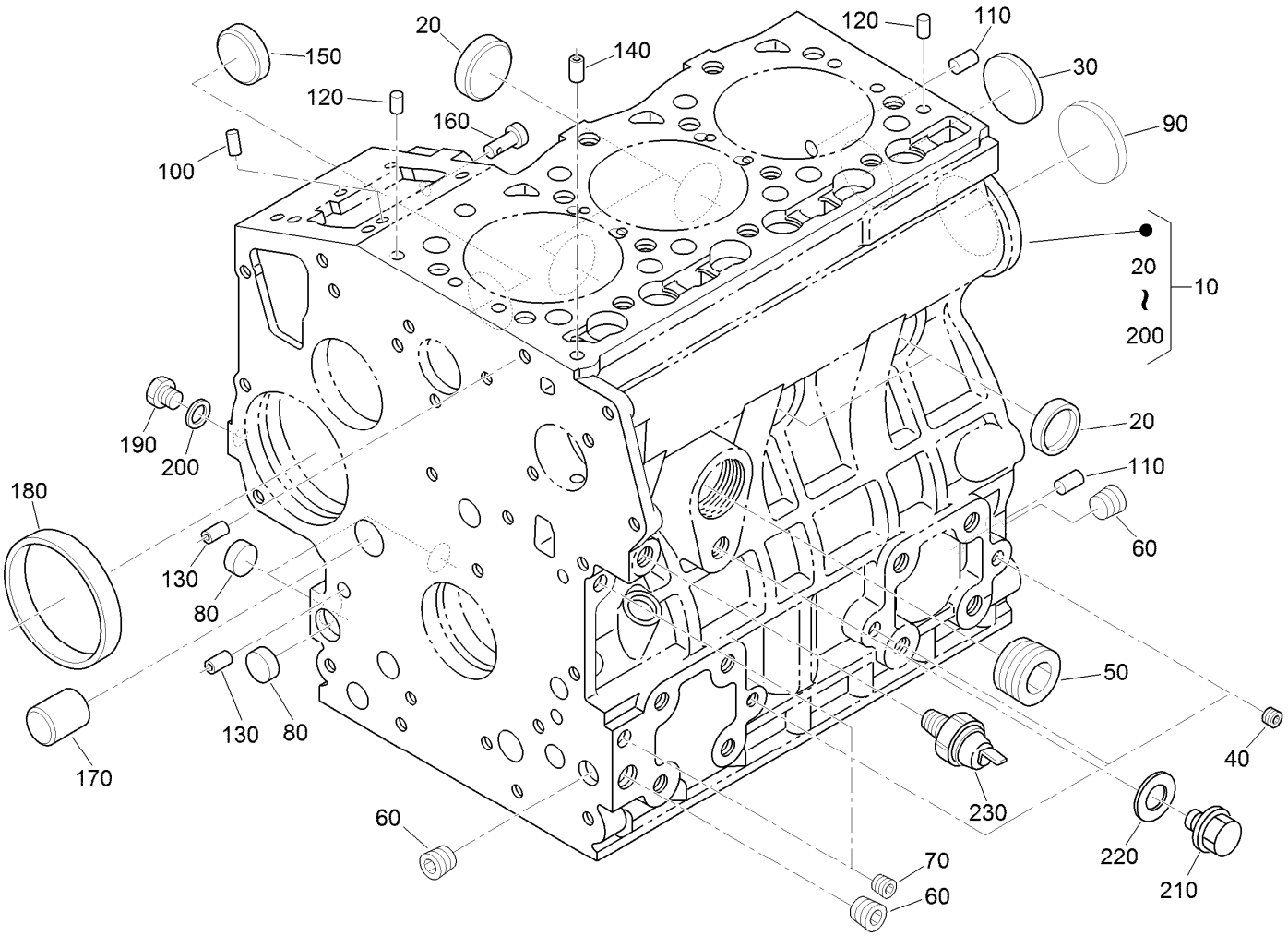

Crankcase Assembly

Ref.	Part Number	Qty.	Description
10	115-3443	1	Crankcase ASM
20	98-9398	4	Cap-Sealing
30	98-7539	1	Cap-Sealing
40	98-9687	3	Plug
50	105-3779	1	Plug
60	98-9597	3	Plug
70	98-7487	2	Plug
80	98-9379	3	Plug-Expansion
90	98-9668	1	Plug-Expansion
100	98-9375	2	Pin-Straight
110	98-9377	2	Pin-Straight
120	98-9376	2	Pin-Straight

Ref.	Part Number	Qty.	Description
130	98-9387	2	Pin-Pipe
140	98-9539	1	Pin-Pipe
150	98-9599	1	Plug
160	98-9630	1	Pin-Spring, Start
170	98-9675	1	Plug
180	98-9656	1	Bushing-Governor, Gear
190	120-2559	1	Plug
200	98-7428	1	Gasket
210	99-3447	1	Plug
220	106-7056	1	Gasket
230	98-9416	1	Switch-Oil

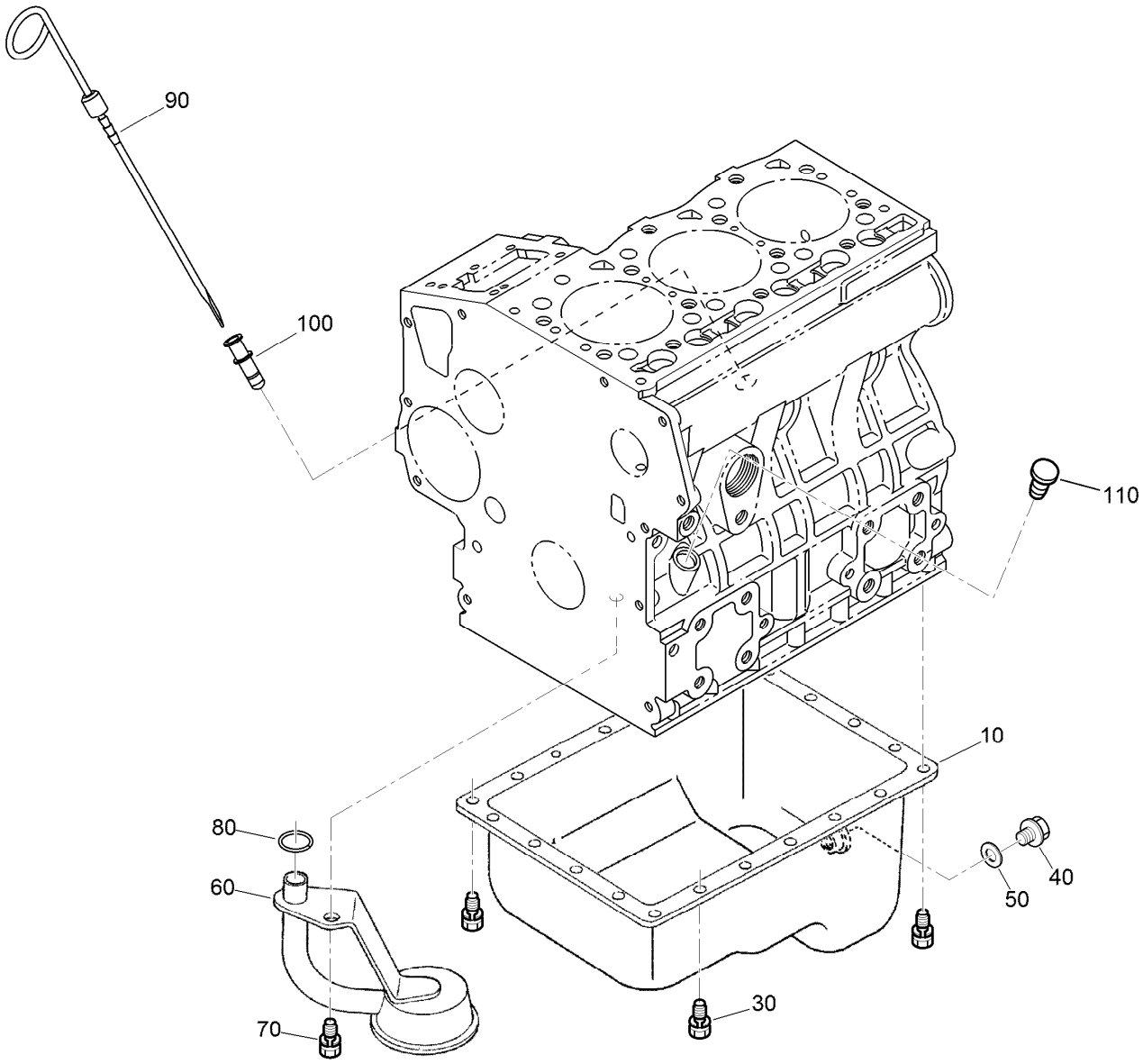

Oil Pan and Dipstick Assembly

Ref.	*Part Number*	*Qty.*	*Description*
10	112-0179	1	Pan-Oil
30	98-9351	22	Bolt
40	114-8151	1	Plug-Drain
50	98-7524	1	Gasket
60	108-1401	1	Base-Filter
70	98-7526	1	Bolt
80	105-3776	1	O-Ring
90	104-9348	1	Gauge-Oil
100	105-4580	1	Guide-Gauge, Oil
110	110-3720	1	Plug-Gauge, Oil

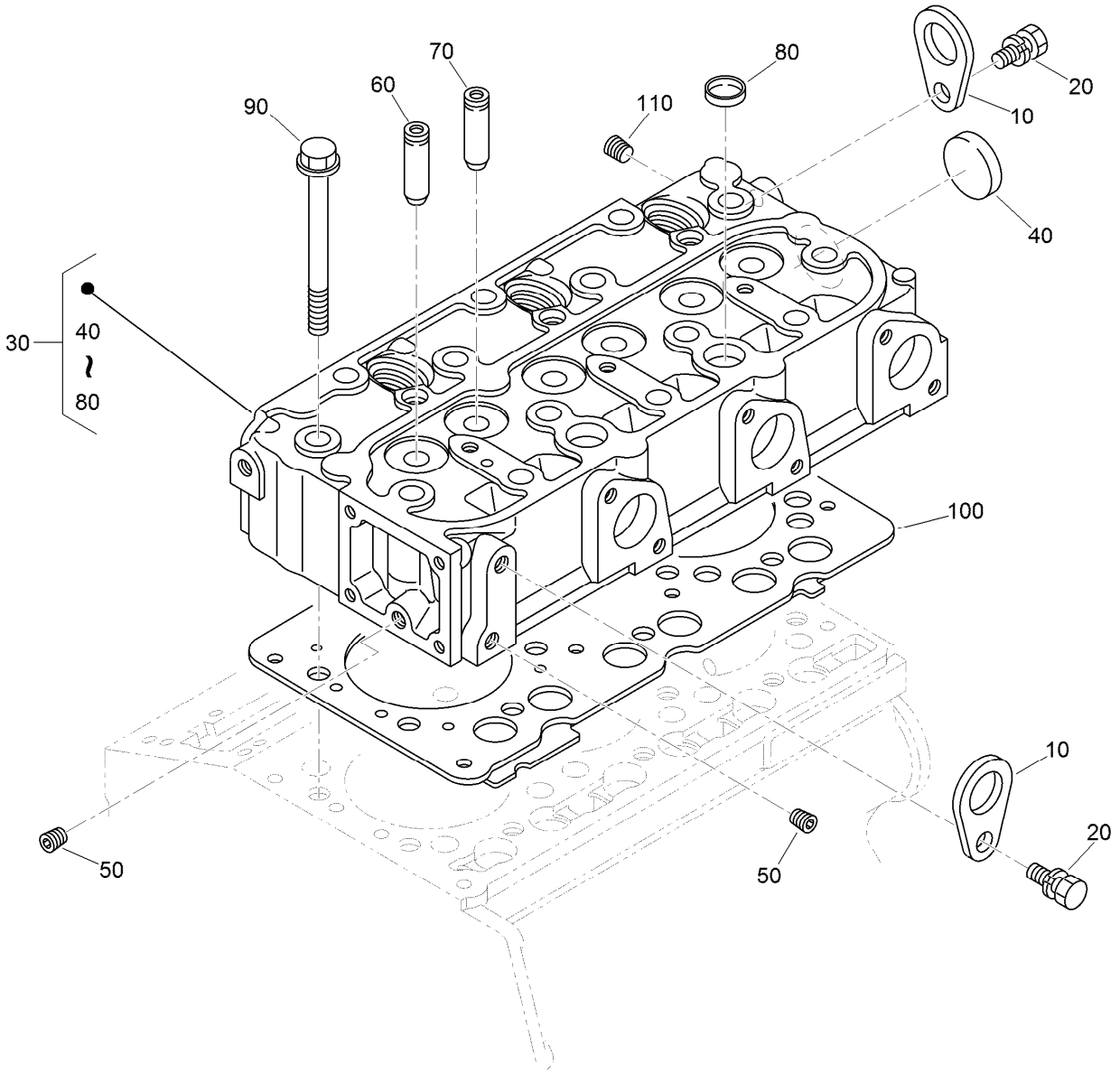

Cylinder Head Assembly

Ref.	*Part Number*	*Qty.*	*Description*
10	98-7531	2	Hook-Engine
20	100-9195	2	Bolt
30	130-1544	1	Cylinder Head ASM
40	105-3705	1	Cap-Sealing
50	98-9687	2	Plug
60	107-9066	3	Guide-Valve, Inlet
70	107-9067	3	Guide-Valve, Exhaust
80	98-9389	2	Cap-Sealing
90	98-9479	14	Bolt-Head, Cylinder
100	108-6573	1	Gasket-Head, Cylinder
110	98-9444	1	Plug

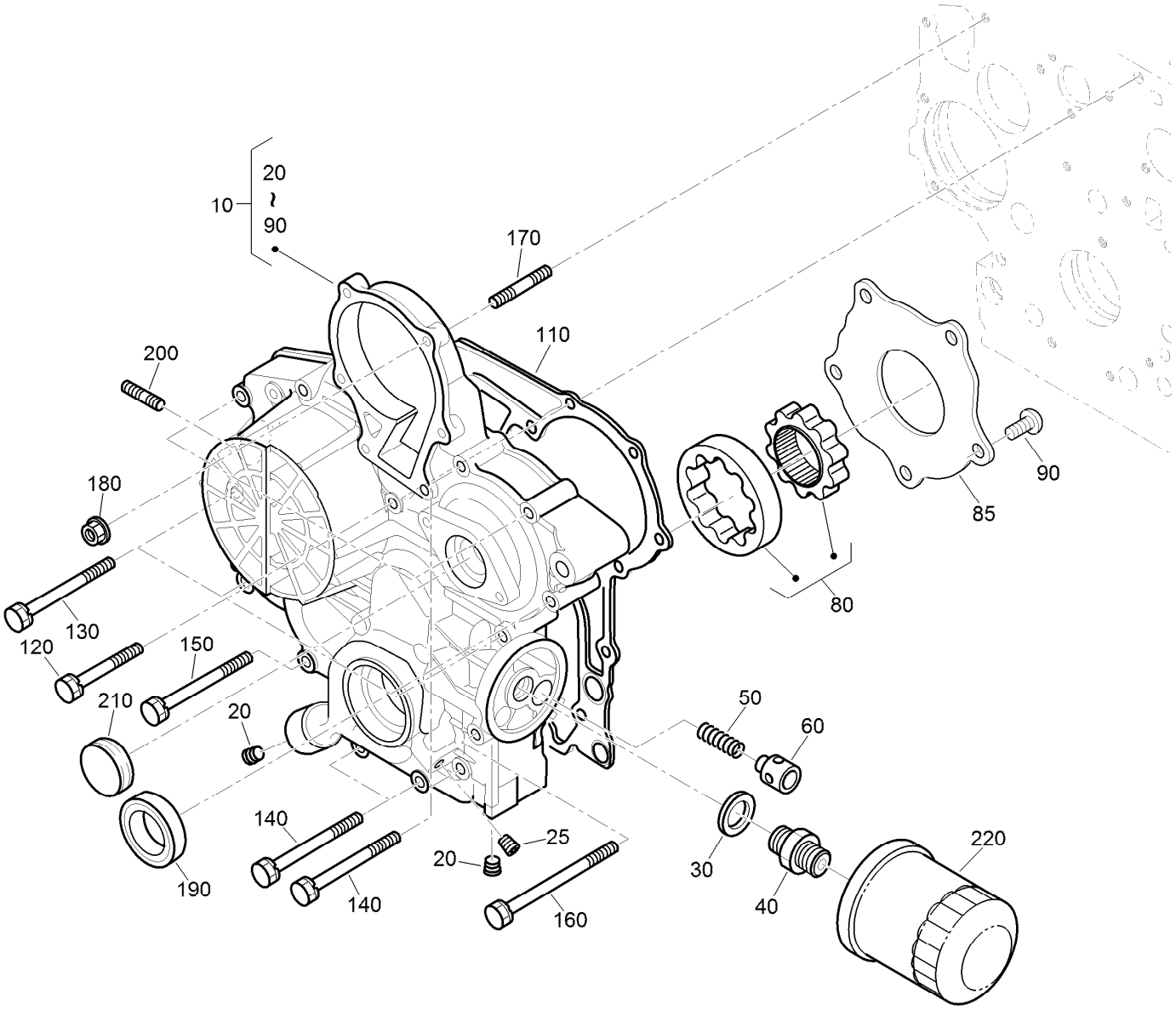

Gear Case and Oil Filter Cartridge Assembly

Ref.	Part Number	Qty.	Description
10	115-4105	1	Gear Case ASM
20	127-0425	2	Plug
25	98-7487	1	Plug
30	98-7562	1	Washer-Plain
40	98-9388	1	Joint-Pipe
50	130-1511	1	Spring
60	130-1510	1	Valve-Relief
80	130-1508	1	Rotor ASM
85	130-1509	1	Cover-Pump, Oil
90	130-1164	5	Screw-Binding
110	98-9633	1	Gasket-Case, Gear

Ref.	Part Number	Qty.	Description
120	100-1765	3	Bolt
130	125-9063	4	Bolt-Sems
140	98-9356	4	Bolt
150	107-9074	1	Bolt
160	98-9586	1	Bolt
170	105-3709	1	Stud
180	100-2203	1	Nut-Flange
190	119-8038	1	Seal-Oil
200	105-3710	2	Stud
210	99-3515	1	Plug-Gearcase
220	127-0511	1	Filter-Oil

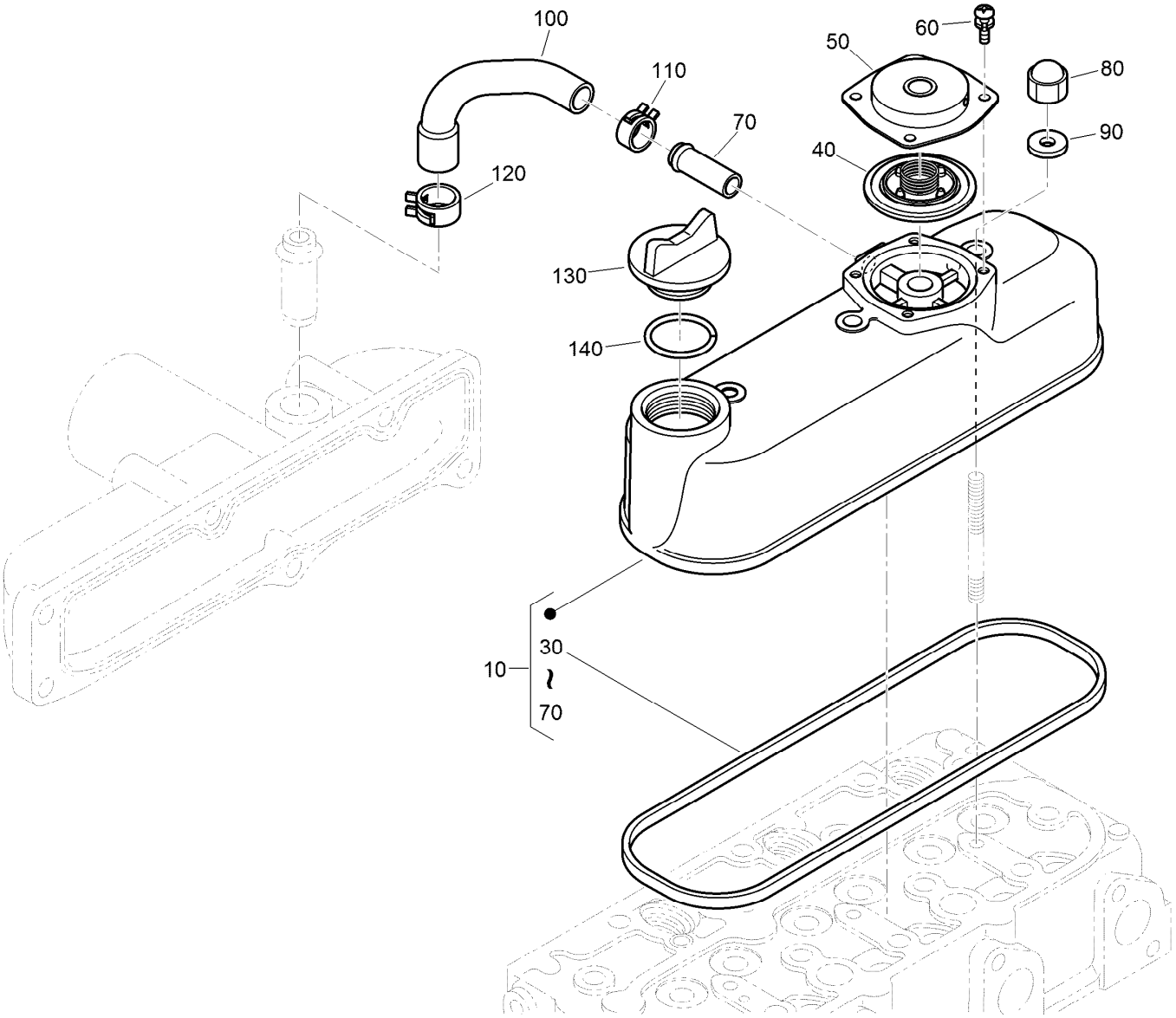

Cylinder Head Cover Assembly

Ref.	*Part Number*	*Qty.*	*Description*
10	130-1372	1	Cylinder Head Cover ASM
30	98-9615	1	Gasket-Cover, Head
40	110-3715	1	Valve-Breather
50	110-3714	1	Cover-Breather
60	98-9364	4	Screw (With Washer)
70	98-7766	1	Pipe-Return, Water
80	98-9455	3	Nut-Cap
90	98-9454	3	Gasket
100	108-2858	1	Tube-Breather
110	108-2859	1	Clamp-Hose
120	108-2860	1	Clamp-Hose
130	107-9075	1	Plug-Filler, Oil
140	99-3446	1	O-Ring

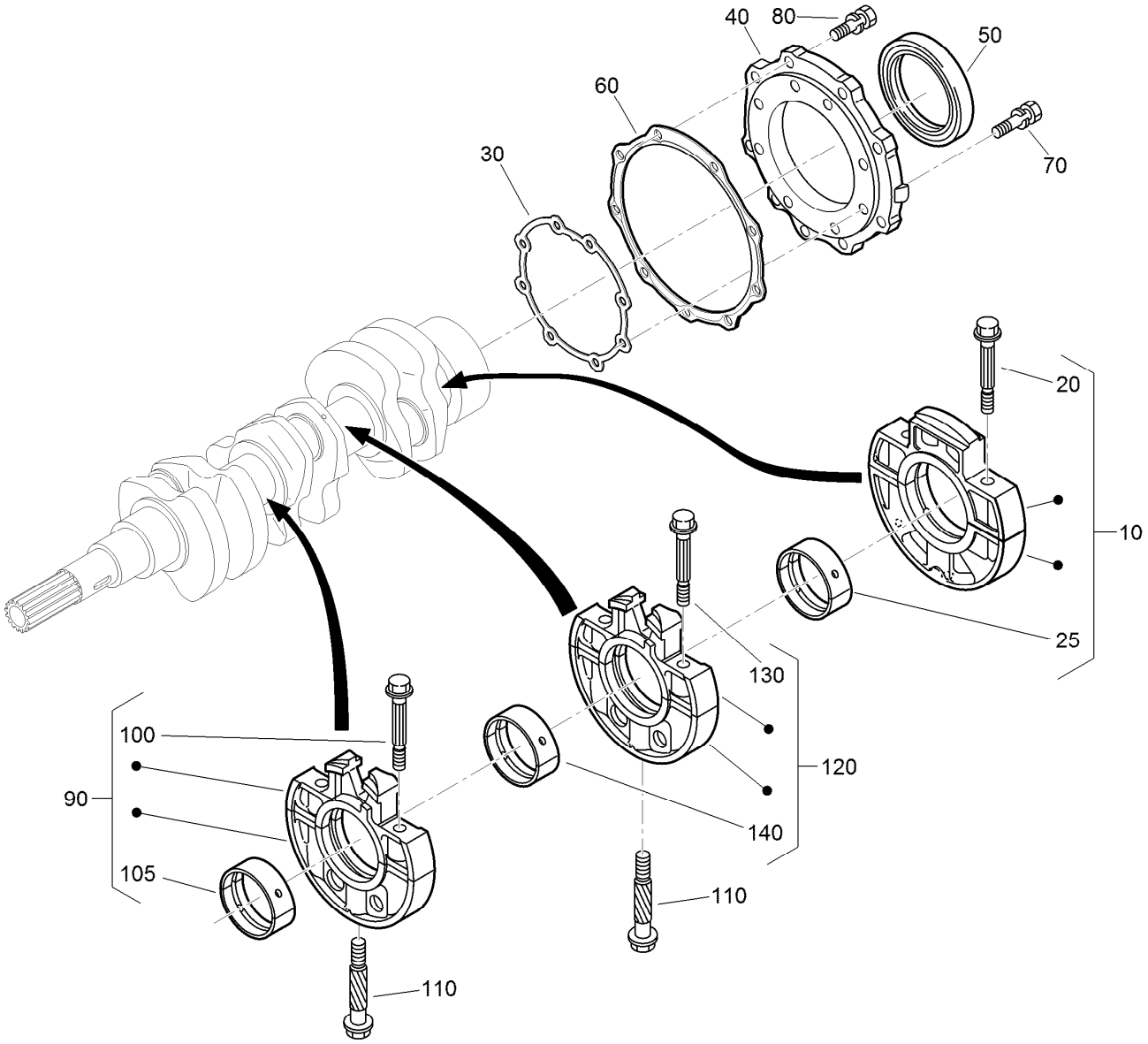

Main Bearing Case Assembly

Ref.	Part Number	Qty.	Description
10	112-7026	1	Wheel Bearing Case ASM
20	98-9484	2	Bolt-Case, Bearing
25	115-4121	1	Metal-Crankshaft (STD)
25	112-7039	1	Metal-Crankshaft (0.2Mm)
25	112-7040	1	Metal-Crankshaft (-0.4Mm)
30	131-6554	1	Gasket-Case, Bearing
40	112-7046	1	Cover-Case, Bearing
50	112-0180	1	Seal-Oil
60	112-7037	1	Gasket-Cover, Case
70	127-0441	8	Bolt
80	127-0442	9	Bolt

Ref.	Part Number	Qty.	Description
90	115-4106	1	Main Bearing Case ASM
100	98-9484	2	Bolt-Case, Bearing
105	98-9524	1	Metal-Crankshaft (STD Set)
105	127-0433	1	Metal-Crankshaft (-0.2MM)
110	98-9531	1	Bearing-Main (0.4MM)
110	98-9485	2	Bolt-Case, Bearing
120	115-4107	1	Main Bearing Case ASM
130	98-9484	2	Bolt-Case, Bearing
140	98-9524	1	Metal-Crankshaft (STD Set)
140	127-0433	1	Metal-Crankshaft (-0.2MM)
140	98-9531	1	Bearing-Main (0.4MM)

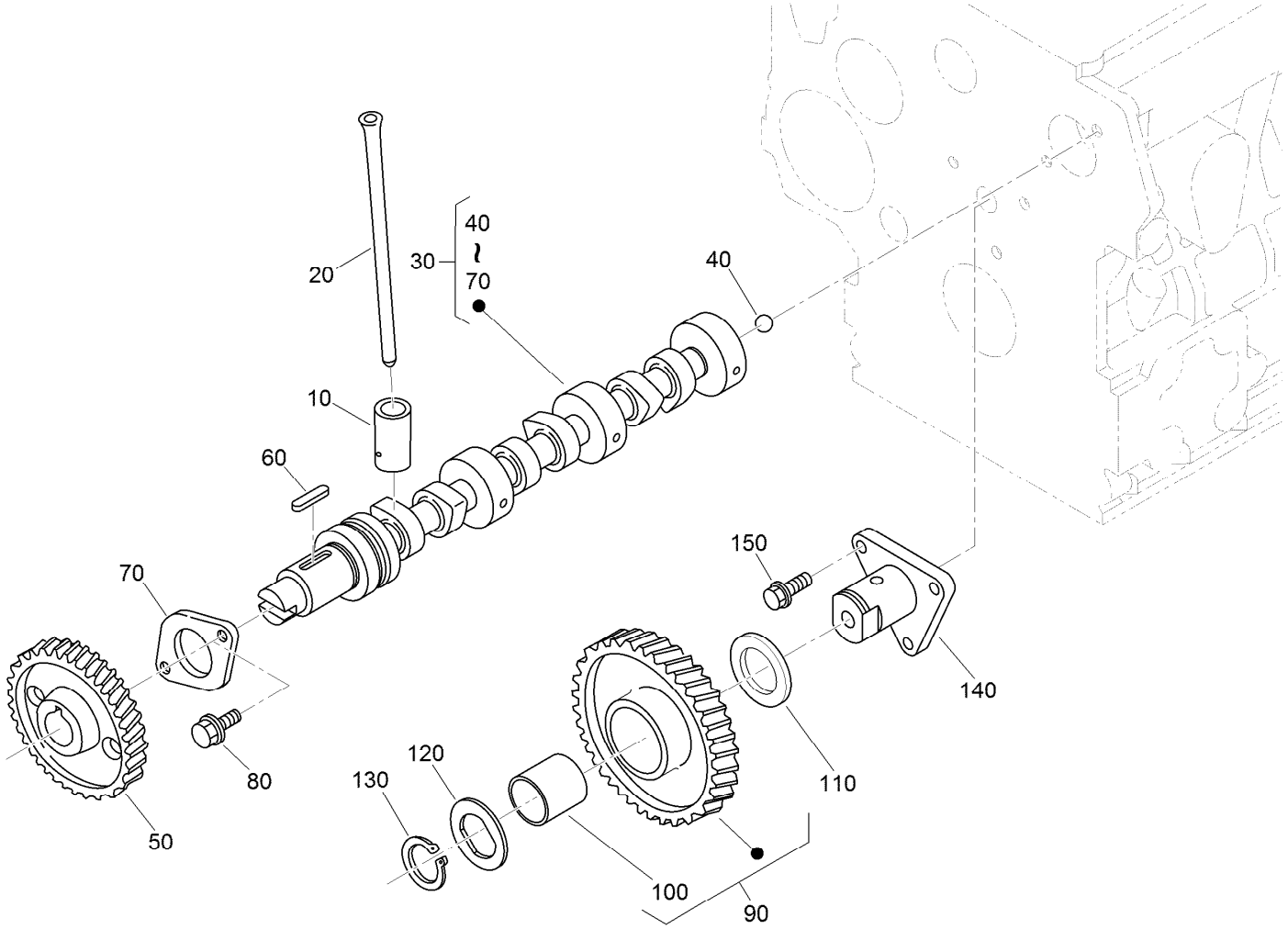

Camshaft and Idle Gear Shaft Assembly

Ref.	*Part Number*	*Qty.*	*Description*
10	112-0185	6	Tappet
20	127-0421	6	Rod-Push
30	130-1545	1	Camshaft ASM
40	110-3729	1	Ball
50	120-3116	1	Camshaft ASM
60	98-9378	1	Key-Feather
70	131-6555	1	Stopper (Camshaft)
80	98-7692	2	Bolt
90	117-7584	1	Idler Gear ASM
100	117-7585	1	Bushing-Gear, Idle
110	98-9535	1	Collar-Gear, Idle
120	98-9536	1	Collar-Gear, Idle
130	98-9534	1	Circlip-Gear, Idle
140	98-9533	1	Shaft-Gear, Idle
150	98-7692	3	Bolt

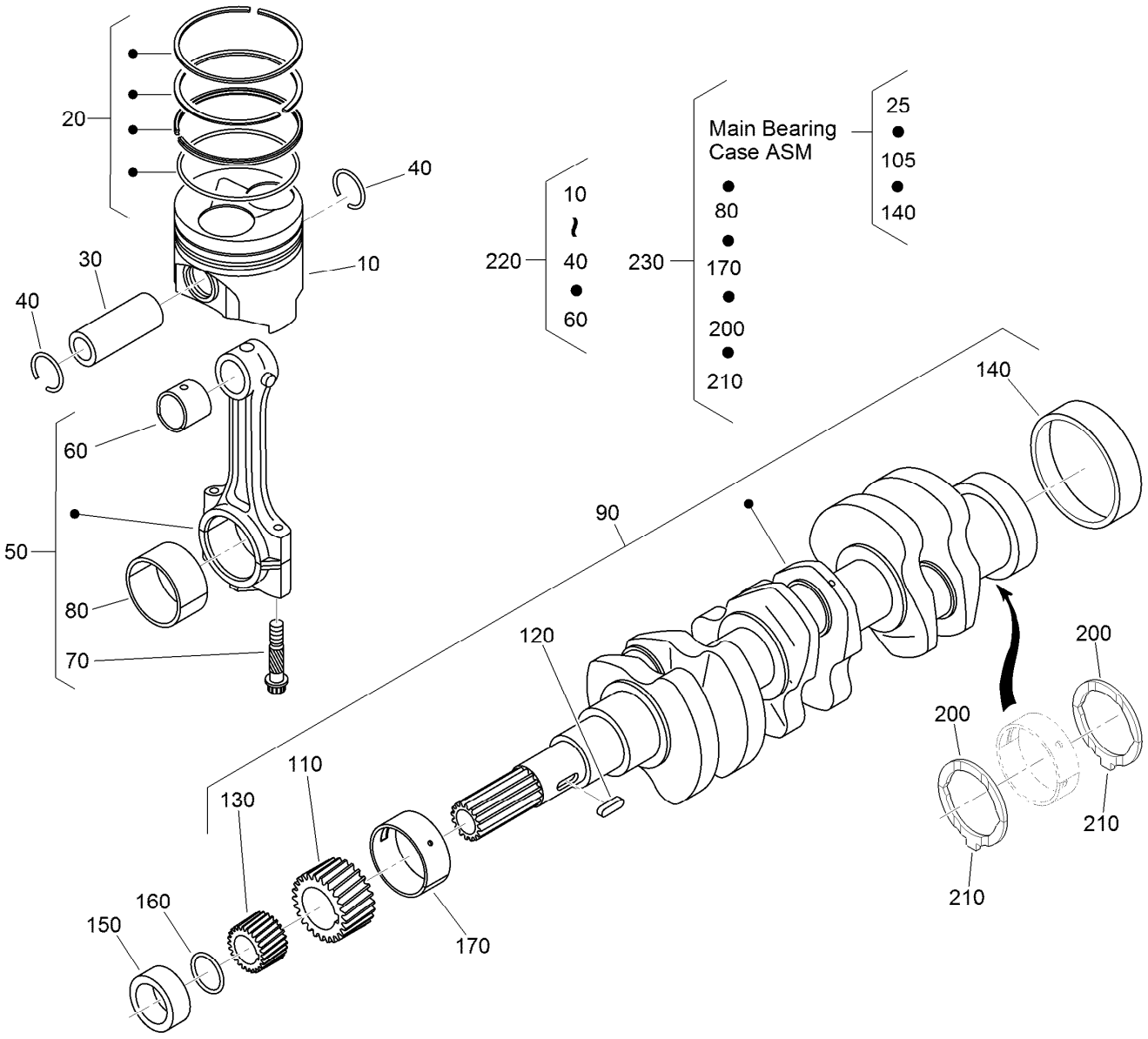

Piston and Crankshaft Assembly

Ref.	Part Number	Qty.	Description
10	130-1546	3	Piston (STD)
10	130-1549	3	Piston (+0.50MM)
20	130-1506	3	Piston Ring ASM (STD)
20	130-1507	3	Piston Ring ASM (+0.50MM)
30	98-9513	3	Pin-Piston
40	98-9514	6	Circlip-Pin, Piston
50	117-7586	3	Connecting Rod ASM
60	115-3014	3	Bushing-Pin, Piston
70	98-9517	6	Bolt-Rod, Connecting
80	98-9553	3	Bearing-Rod (STD)
80	98-9519	3	Bearing-Rod (-0.2MM)
80	117-7588	3	Metal-Crankpin (-0.4MM)
90	130-1375	1	Crankshaft ASM
110	117-7561	1	Gear-Crankshaft
120	98-9666	1	Key
130	127-0445	1	Gear-Drive, Oil Pump
140	98-9522	1	Sleeve-Crankshaft
150	127-0444	1	Collar-Crankshaft

Ref.	Part Number	Qty.	Description
160	105-3783	1	O-Ring
170	112-7005	1	Bearing-Main (STD)
170	98-9528	1	Bearing-Main (-0.2MM)
170	130-1274	1	Metal-Crankshaft (-0.40Mm)
200	98-9413	2	Bearing-Thrust (STD)
200	127-0416	2	Metal-Side (+0.2Mm)
200	127-0417	2	Metal-Side (+0.40Mm)
210	98-9688	2	Bearing-Thrust (STD)
210	127-0437	2	Metal-Side (+0.2MM)
210	127-0438	2	Metal-Side (+0.40MM)
220	130-1547	3	Piston Kit
220	130-1548	3	Piston Kit
230	130-1501	1	Engine Metal Kit (STD)
230	130-1498	1	Engine Metal Kit (-0.20Mm/+0.20Mm)
230	130-1499	1	Engine Metal Kit (-0.40Mm/+0.40Mm)

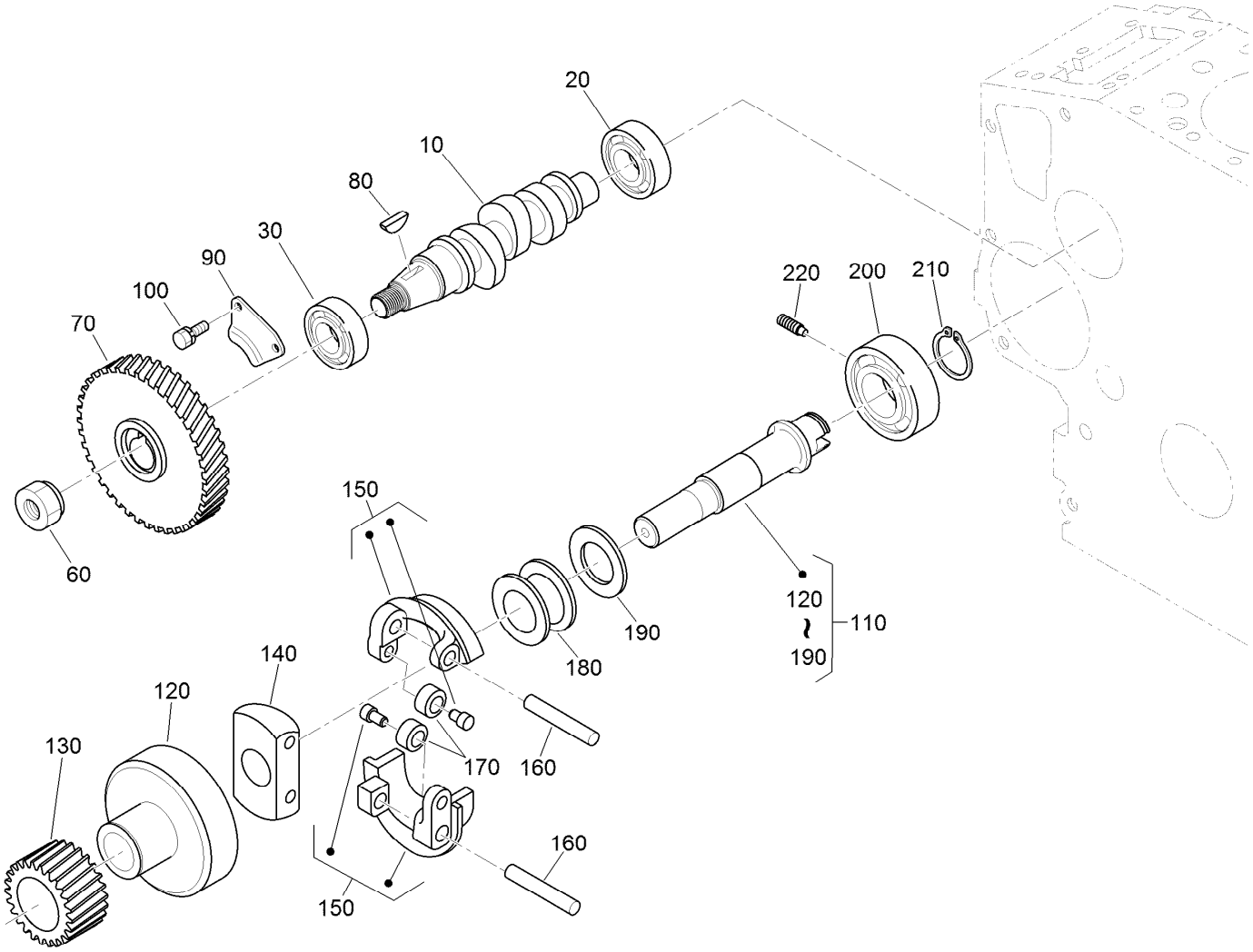

Fuel Camshaft and Governor Shaft Assembly

Ref.	Part Number	Qty.	Description
10	98-9459	1	Camshaft-Fuel
20	107-9077	1	Bearing-Ball
30	107-9078	1	Bearing-Ball
60	130-1512	1	Nut
70	120-2562	1	Gear-Pump, Injection
80	98-9595	1	Key-Woodruff
90	98-9511	1	Stopper-Fuel, Camshaft
100	98-7692	2	Bolt
110	130-1255	1	Governor Shaft ASM
120	98-9562	1	Holder-Gear, Governor

Ref.	Part Number	Qty.	Description
130	98-9673	1	Gear-Governor
140	98-9561	1	Holder-Weight, Governor
150	98-9559	2	Governor Weight ASM
160	98-9560	2	Shaft-Weight, Governor
170	98-9692	2	Roller
180	98-9563	1	Sleeve-Governor
190	98-9564	1	Washer-Thrust
200	107-9079	1	Bearing-Ball
210	98-9657	1	Circlip-Shaft, Governor
220	98-9565	1	Screw-Set

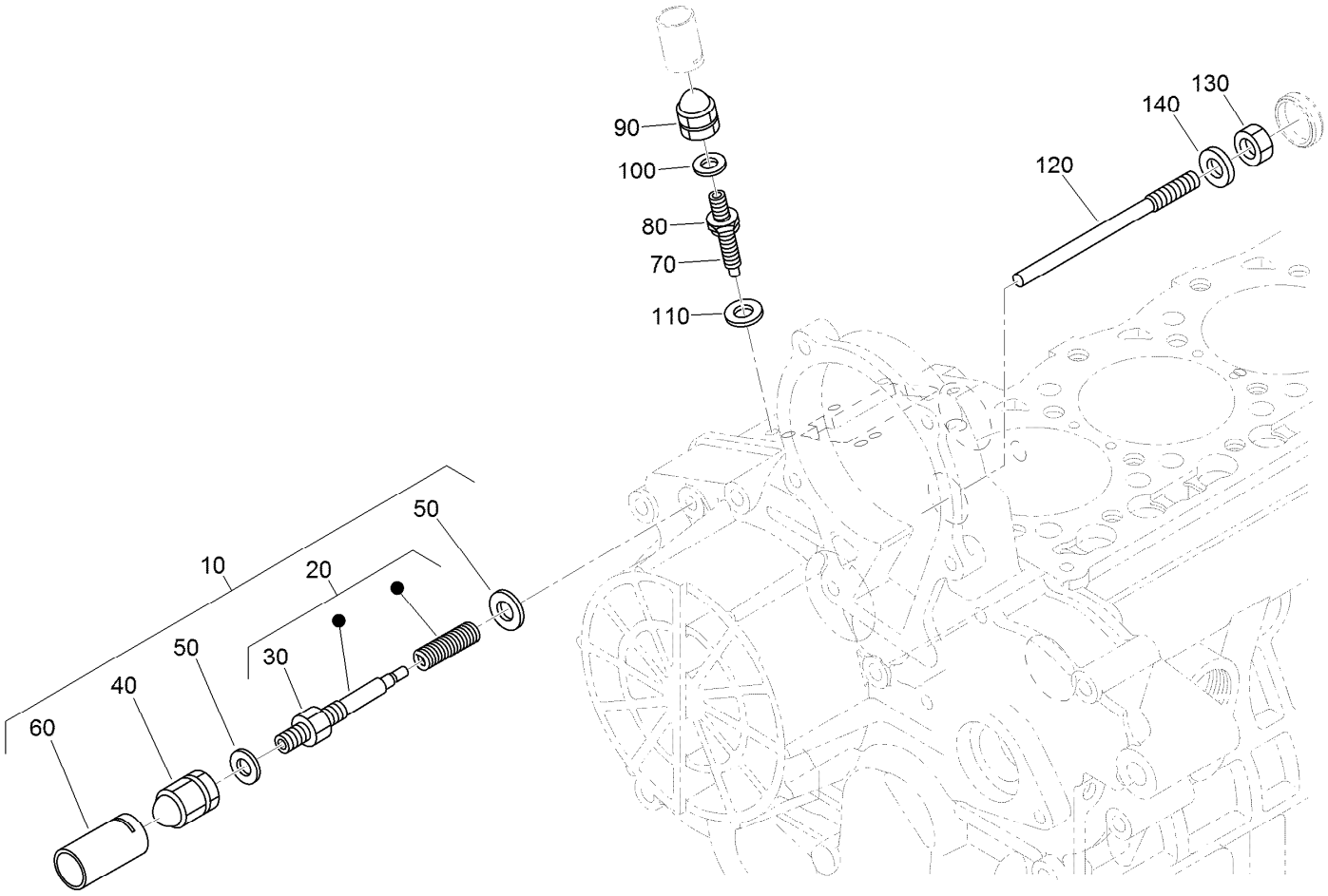

Idle Apparatus Assembly

Ref.	*Part Number*	*Qty.*	*Description*
10	98-9678	1	Idle Apparatus ASM
20	112-7014	1	Adjusting Bolt ASM
30	98-9439	1	Nut
40	112-0181	1	Nut
50	98-7654	2	Gasket
60	98-7656	1	Cap
70	112-7015	1	Bolt-Adjusting
80	100-2175	1	Nut-Lock
90	112-0181	1	Nut
100	98-7654	1	Gasket
110	107-9081	1	Gasket
120	131-6556	1	Bolt
130	98-7572	1	Nut
140	98-7654	1	Gasket

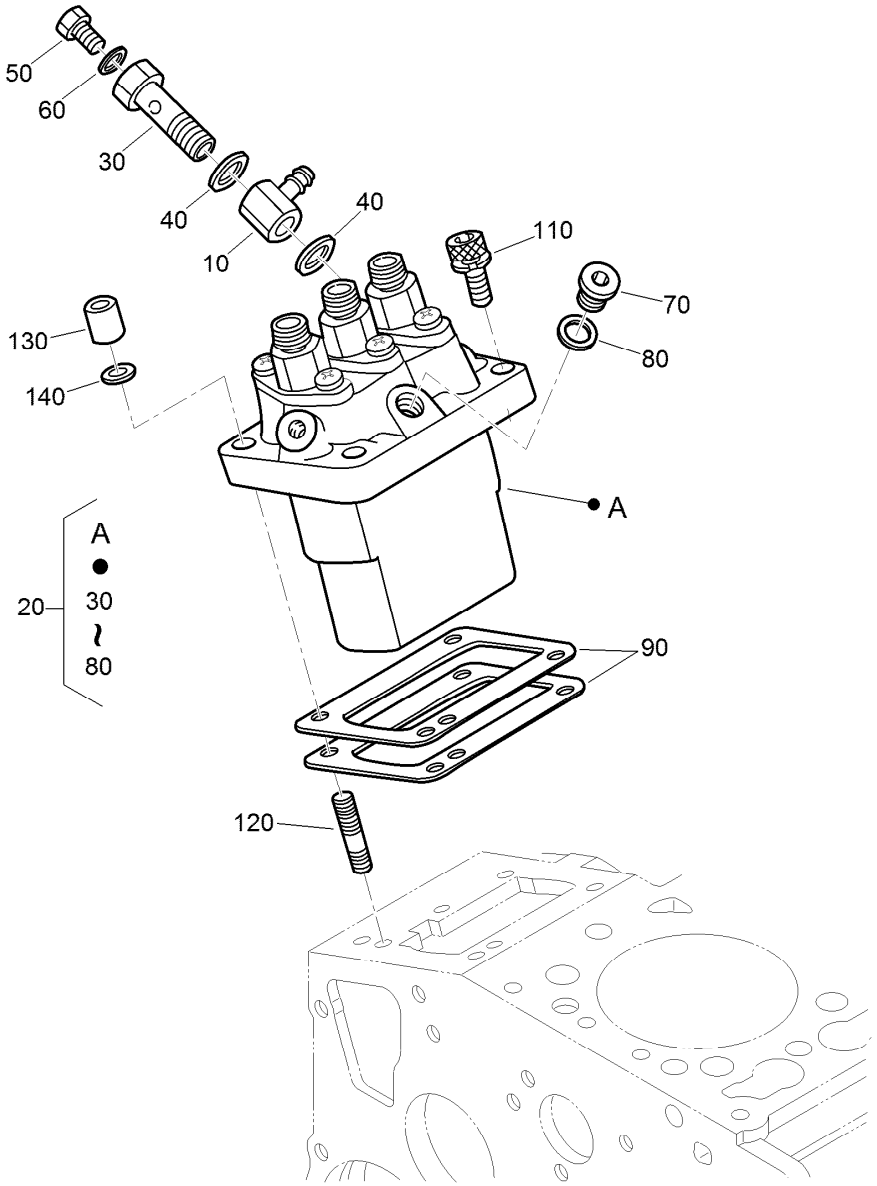

Injection Pump Assembly

Ref.	Part Number	Qty.	Description
10	98-9596	1	Joint-Eye
20	98-9643	1	Injection Pump ASM
30	98-9464	1	Bolt-Joint
40	98-9445	2	Gasket
50	98-9430	1	Screw
60	98-9446	1	Gasket
70	98-9466	1	Plug
80	98-9451	1	Gasket
90	98-9456	1	Shim-Injection (0.20MM)

Ref.	Part Number	Qty.	Description
90	98-9457	1	Shim-Injection (0.25MM)
90	98-9458	1	Shim-Injection (0.30MM)
90	115-3046	1	Shim-Injection (0.35MM)
90	115-3045	1	Shim-Injection (0.175MM)
110	117-7564	2	Bolt-Hex Soc HD
120	98-9438	2	Stud
130	98-9440	2	Nut-Cap
140	98-7699	2	Washer-Spring

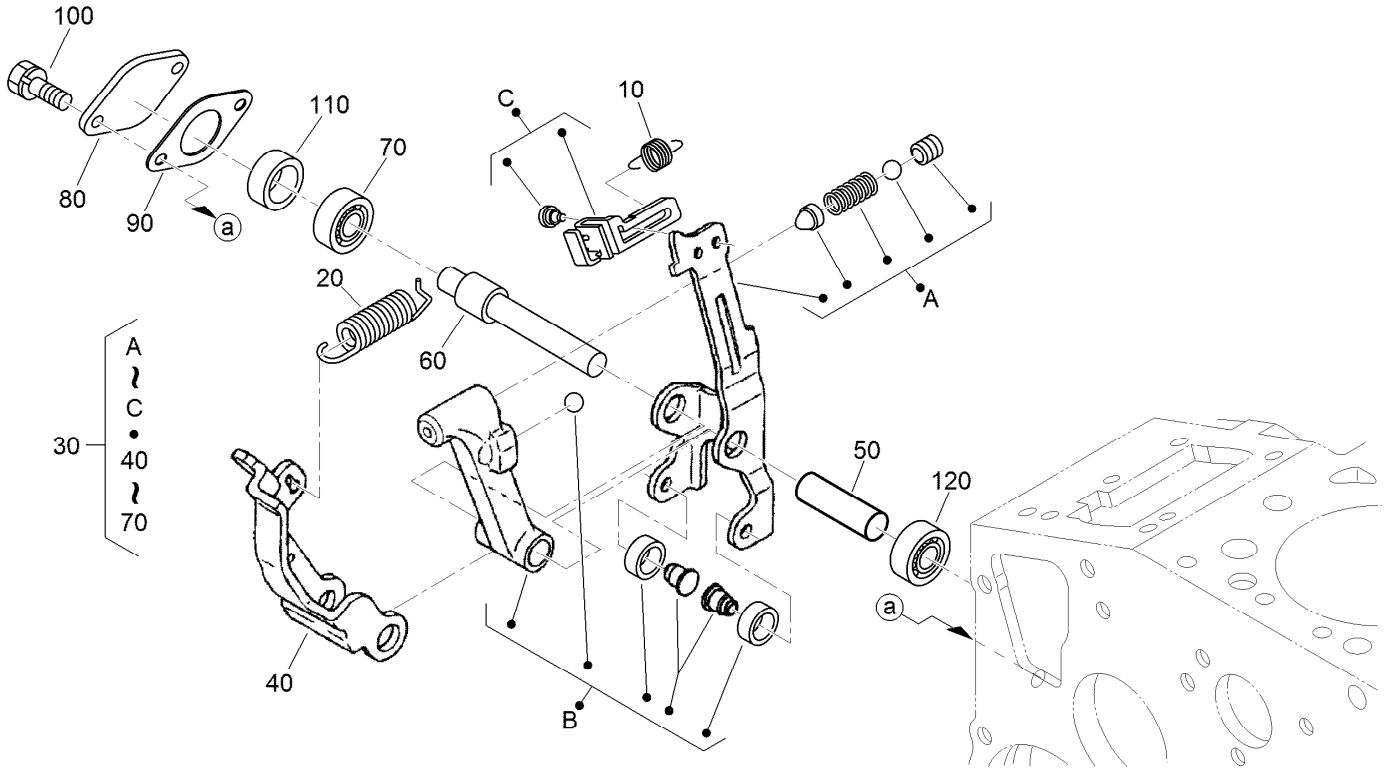

Governor Assembly

Ref.	*Part Number*	*Qty.*	*Description*
10	105-3786	1	Spring-Start
20	98-9681	1	Spring-Governor
30	115-4502	1	Fork Lever ASM
40	107-9084	1	Lever-Fork
50	107-9085	1	Shaft-Lever, Fork
60	107-9086	1	Shaft-Lever, Fork
70	98-9570	1	Bearing-Miniaturize
80	115-4122	1	Cover-Shaft, Fork Lever
90	98-9682	1	Gasket
100	98-9350	2	Bolt
110	98-9567	1	Collar
120	98-9571	1	Bearing-Miniaturize

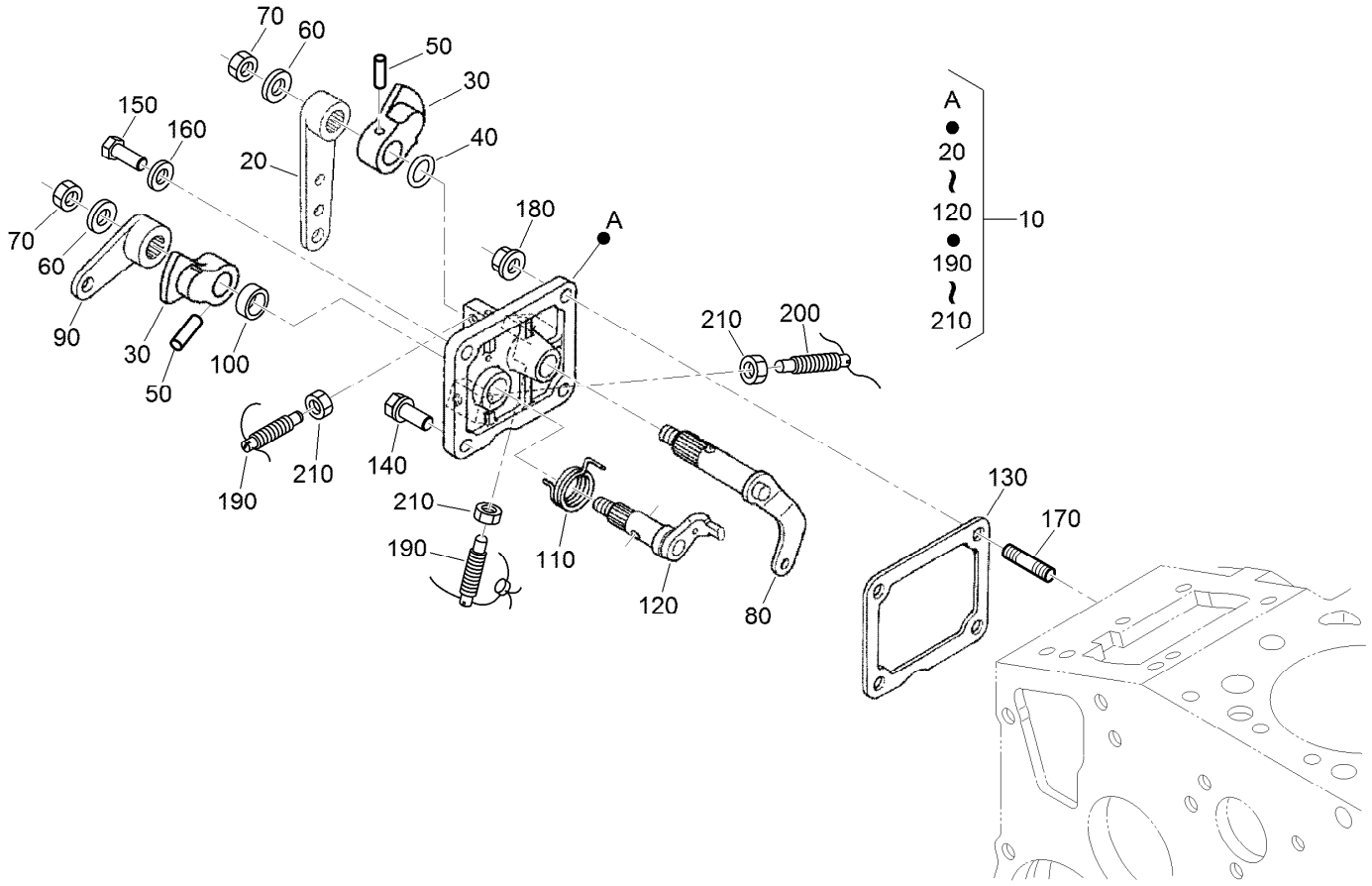

Speed Control Plate Assembly

Ref.	Part Number	Qty.	Description
10	105-3735	1	Control Plate ASM
20	98-9662	1	Lever-Control, Speed
30	98-9572	2	Lever-Control, Speed
40	105-3788	1	O-Ring
50	98-7602	2	Pin-Spring
60	98-9594	2	Washer-Plain
70	98-9589	2	Nut
80	98-9658	1	Governor Lever ASM
90	98-9663	1	Lever-Stop, Engine
100	98-7601	1	Seal-Oil
110	98-9472	1	Spring-Return

Ref.	Part Number	Qty.	Description
120	98-9664	1	Shaft-Lever, Stop
130	98-9637	1	Gasket
140	98-7692	1	Bolt
150	127-0401	1	Bolt-Hex
160	98-7654	1	Gasket
170	105-3710	2	Stud
180	100-2203	2	Nut-Flange
190	117-7565	2	Bolt-Adjusting
200	117-7566	1	Bolt-Adjusting
210	98-7572	3	Nut

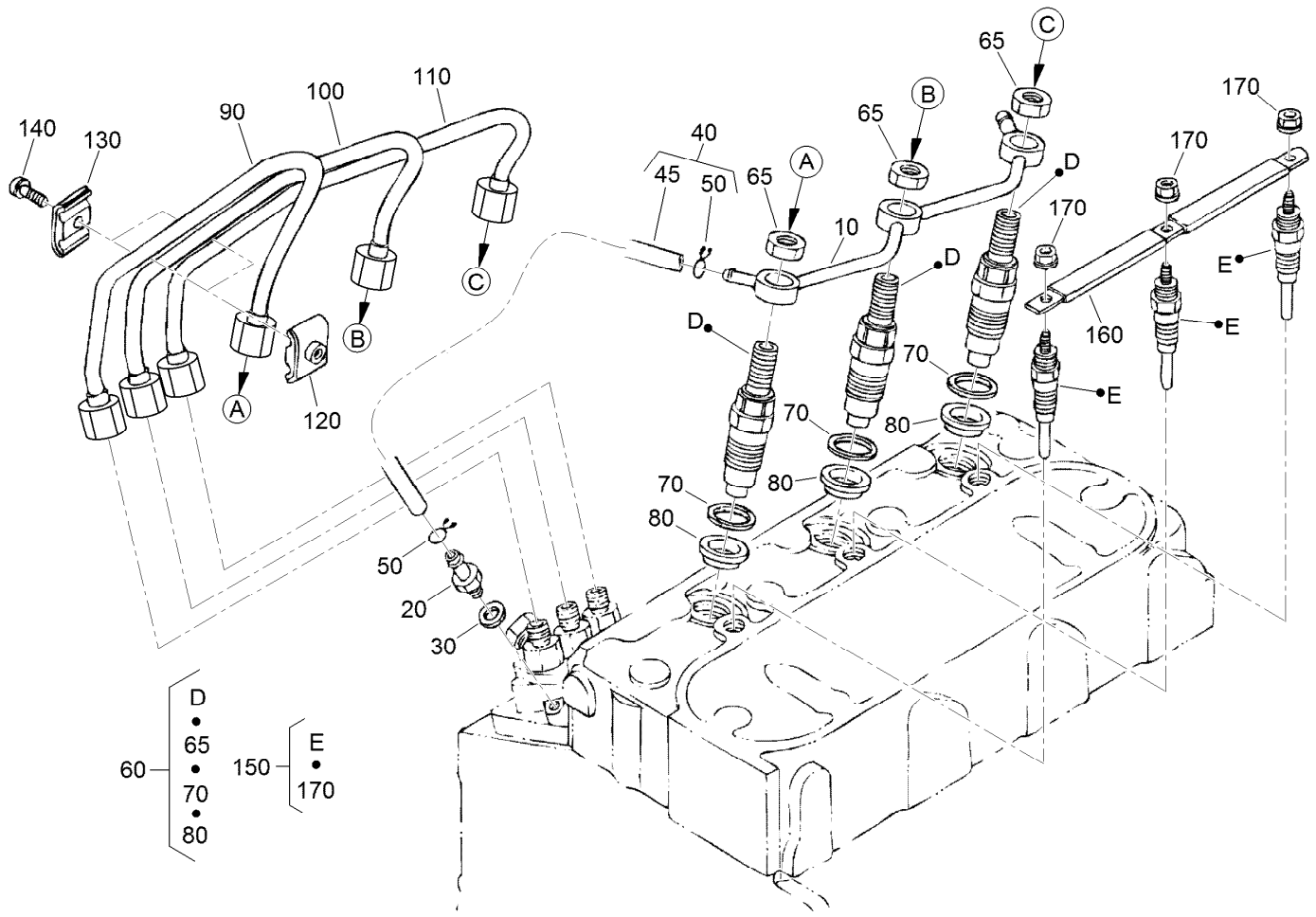

Nozzle Holder and Glow Plug Assembly

Ref.	Part Number	Qty.	Description
10	98-9620	1	Overflow Pipe ASM
20	98-9431	1	Screw-Bleeder, Air
30	98-7654	1	Gasket
40	98-9420	1	Overflow Pipe ASM
45	112-0182	1	Pipe-Overflow
50	98-7671	2	Clip-Pipe
60	115-3018	3	Nozzle Holder Kit
65	121-2411	3	Nut
70	98-7676	3	Gasket
80	98-7677	3	Seal-Heat

Ref.	Part Number	Qty.	Description
90	98-9653	1	Pipe-Injection
100	98-9654	1	Pipe-Injection
110	98-9655	1	Pipe-Injection
120	98-7682	2	Clamp-Pipe
130	98-7683	2	Clamp-Pipe
140	98-7684	2	Screw (W/Washer)
150	130-1411	3	Plug-Glow
160	98-9631	1	Cord-Plug, Glow
170	99-8377	3	Nut-Flange

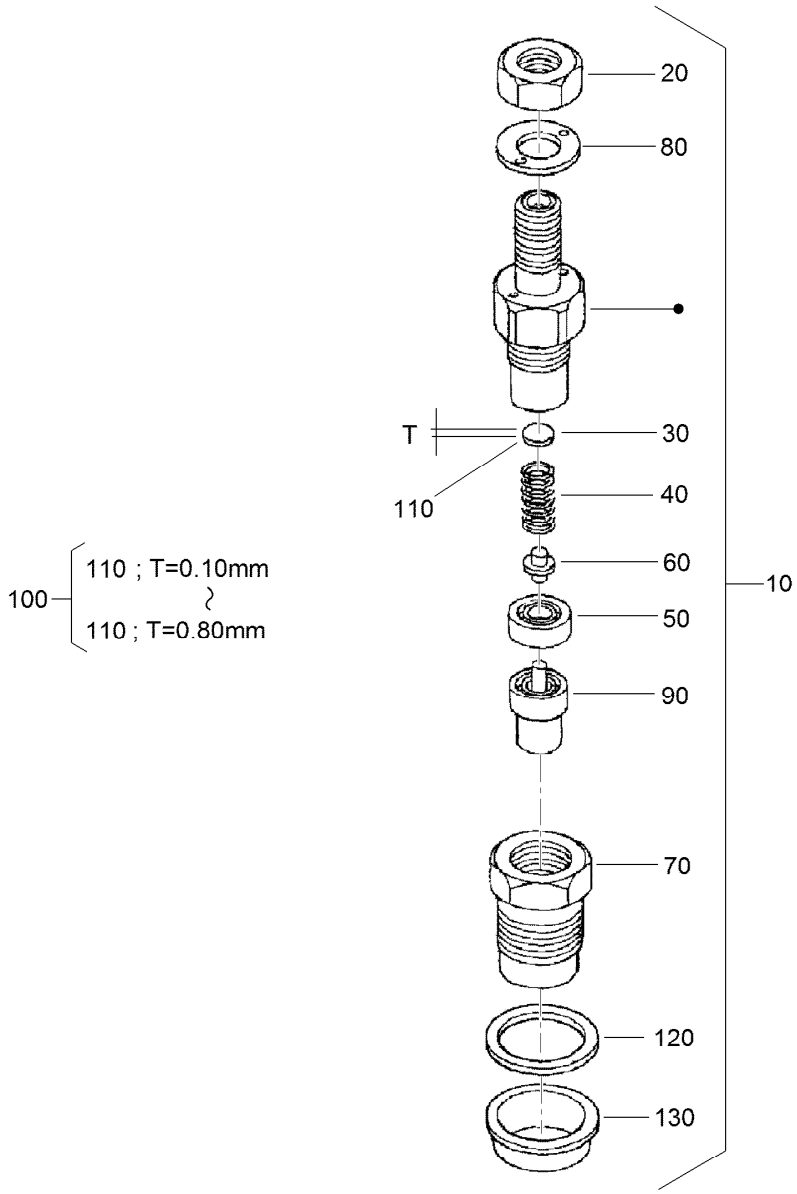

Nozzle Holder Assembly

Ref.	Part Number	Qty.	Description
10	115-3018	3	Nozzle Holder Kit
20	121-2411	3	Nut
30	99-8302	3	Washer-Adjusting
40	99-8303	3	Spring-Nozzle
50	99-8304	3	Spacer-Distance
60	99-8305	3	Rod-Push
70	99-8306	3	Nut-Nozzle
80	99-8307	3	Washer-Plain
90	115-3020	3	Piece-Nozzle
100	99-8309	3	Adjusting Washer ASM
110	99-8310	3	Washer-Adjust (0.10MM)

Ref.	Part Number	Qty.	Description
110	99-8311	3	Washer-Adjust (0.20MM)
110	99-8312	3	Washer-Adjust (0.30MM)
110	99-8313	3	Washer-Adjust (0.40MM)
110	99-8314	3	Washer-Adjust (0.50MM)
110	99-8315	3	Washer-Adjust (0.52MM)
110	99-8316	3	Washer-Adjust (0.54MM)
110	99-8317	3	Washer-Adjust (0.56MM)
110	99-8318	3	Washer-Adjust (0.58MM)
110	99-8319	3	Washer-Adjust (0.80MM)
120	98-7676	3	Gasket
130	98-7677	3	Seal-Heat

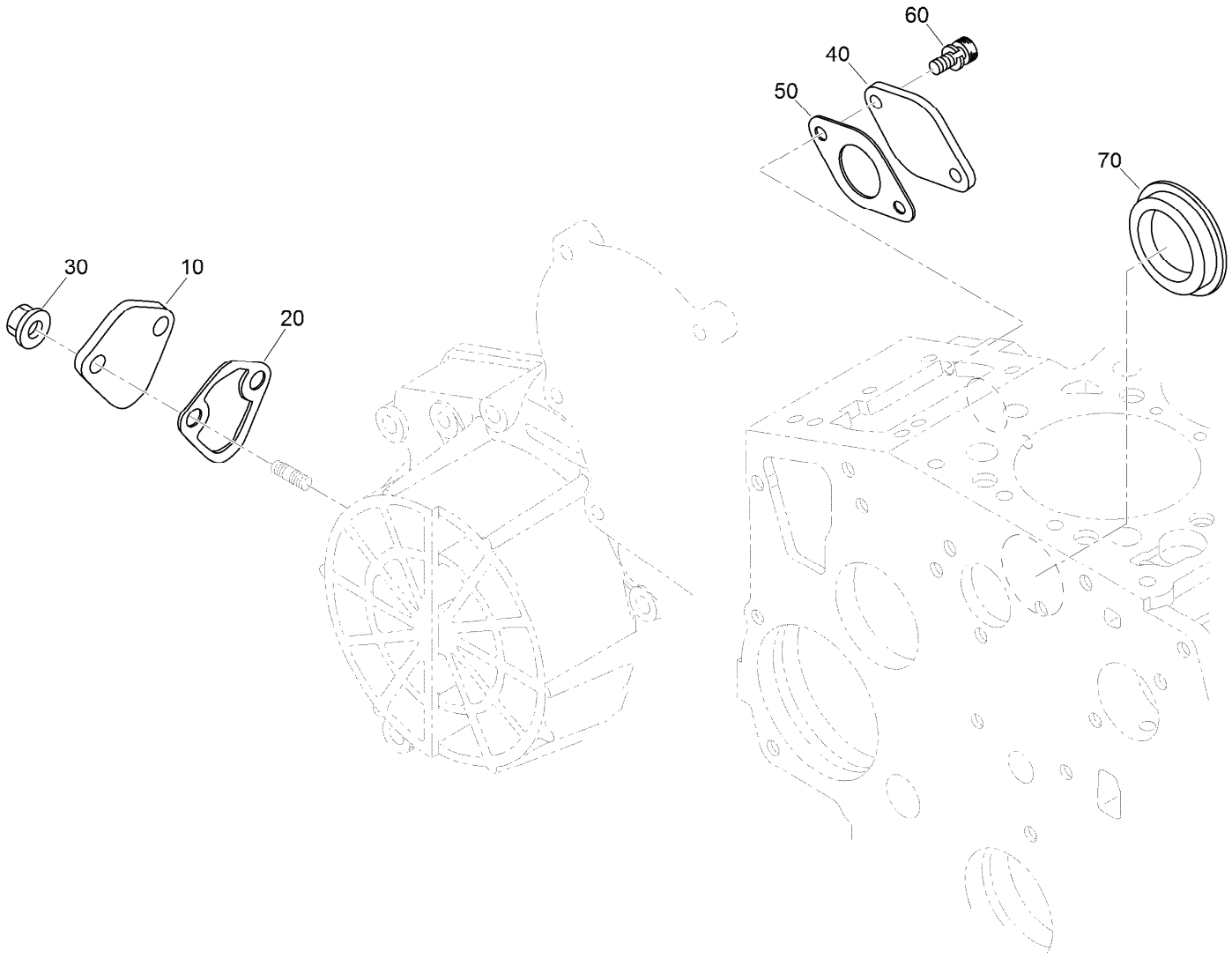

Cover Assembly

Ref.	*Part Number*	*Qty.*	*Description*
10	99-3514	1	Cover
20	117-7562	1	Gasket-Pump, Fuel
30	100-2203	2	Nut-Flange
40	127-0419	1	Cover-Solenoid
50	98-9683	1	Gasket-Cover, Solenoid
60	130-1155	2	Screw-HSH
70	112-7016	1	Cover-Pump

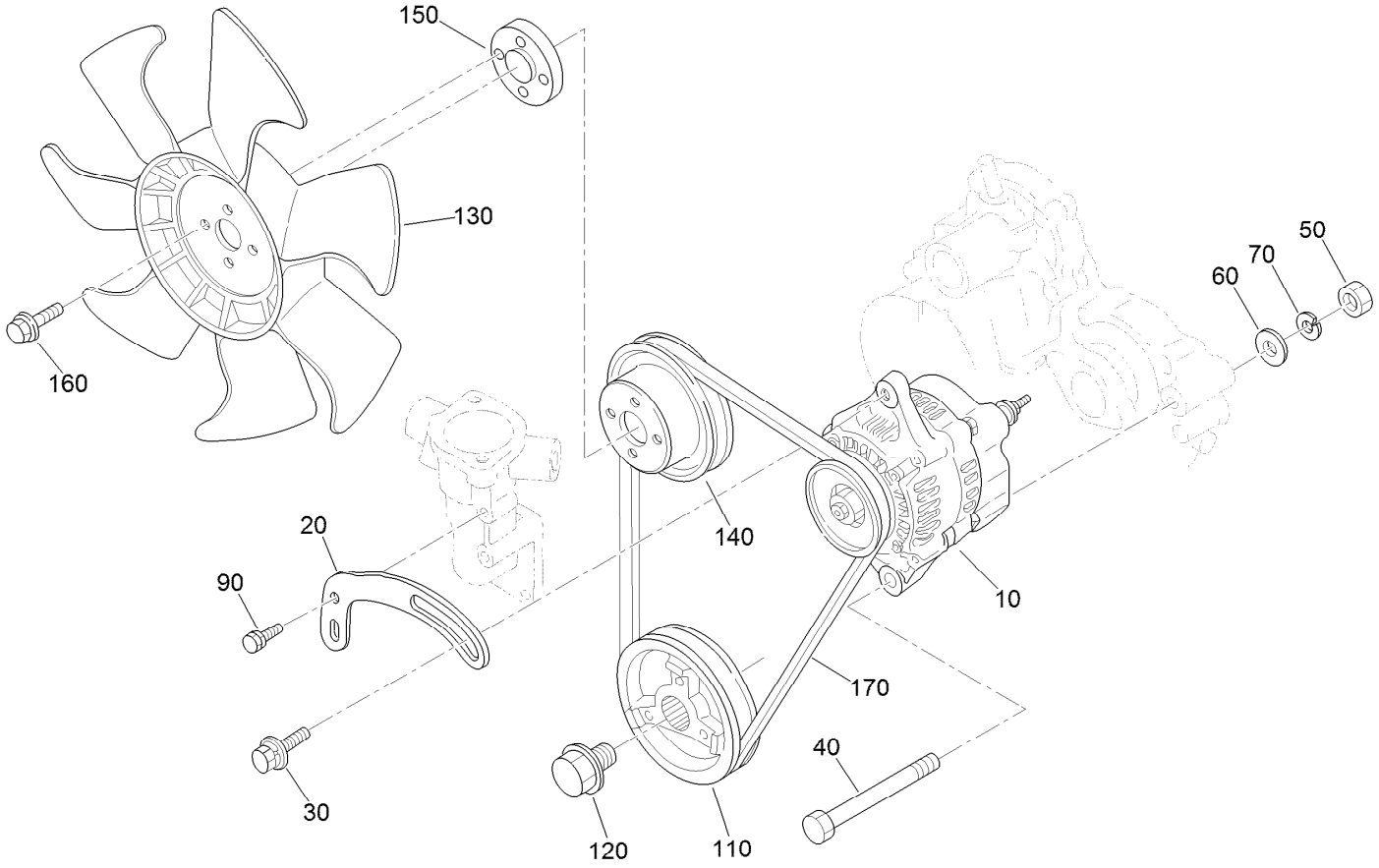

Alternator, Pulley and Fan Assembly

Ref.	*Part Number*	*Qty.*	*Description*
10	131-6557	1	Alternator ASM
20	112-7047	1	Stay-Dynamo
30	108-7088	1	Bolt
40	98-9360	1	Bolt
50	98-7737	1	Nut
60	98-9366	1	Washer-Plain
70	98-7738	1	Washer-Spring
90	98-7692	1	Bolt
110	98-9473	1	Pulley-Drive, Fan
120	98-9585	1	Bolt
130	110-0966	1	Fan-Cooling
140	130-1567	1	Pulley-Fan
150	108-2872	1	Collar-Fan
160	108-2873	4	Bolt-Flange
170	104-3494	1	Belt-V

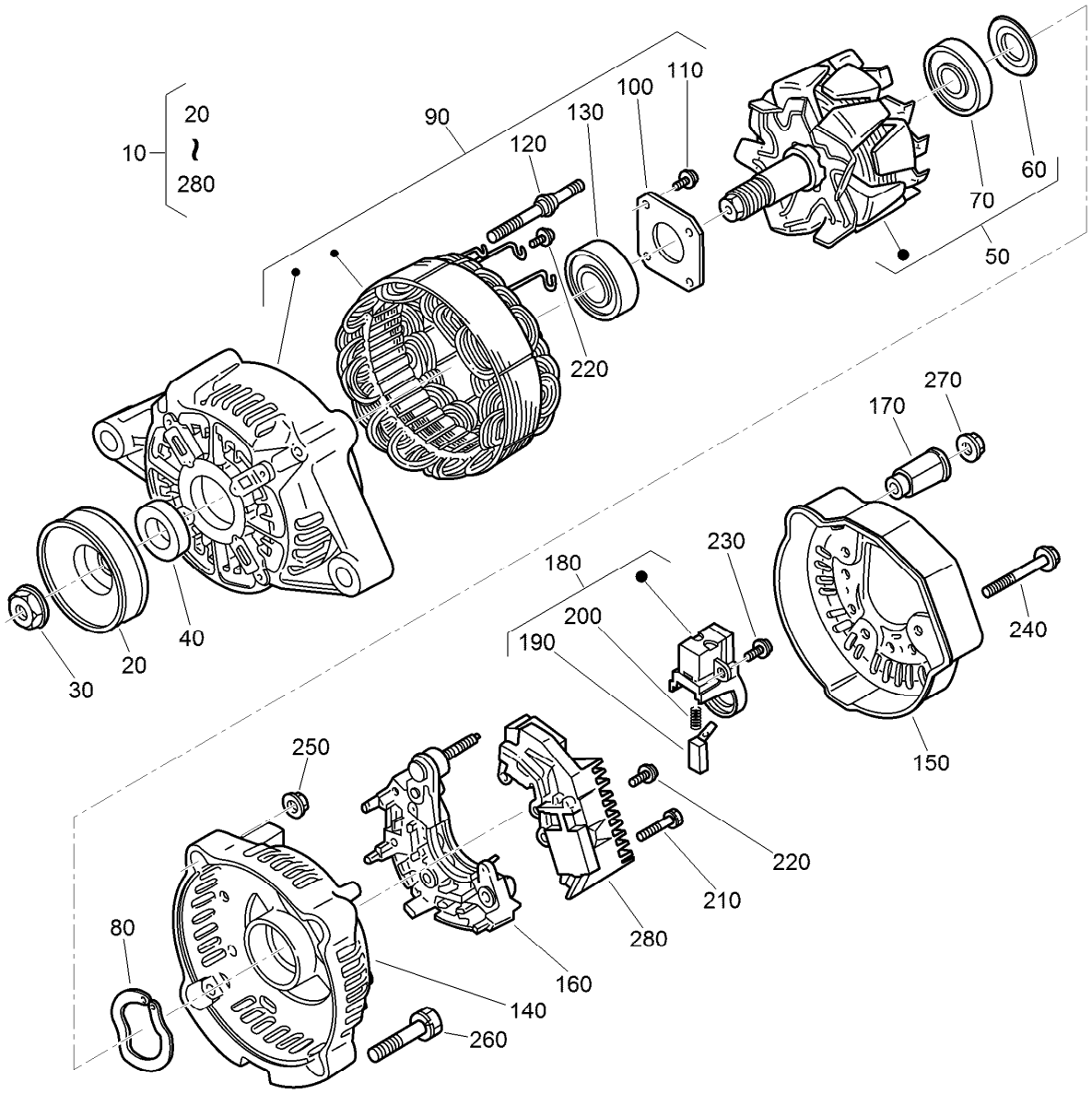

Alternator Assembly No. 131-6557

Ref.	Part Number	Qty.	Description
10	131-6557	1	Alternator ASM
20	98-9453	1	Pulley-Dynamo
30	98-7708	1	Nut
40	98-7709	1	Collar
50	107-0136	1	Rotor ASM
60	98-7711	1	Cover-Bearing
70	107-0138	1	Bearing-Ball
80	98-7713	1	Washer-Thrust
90	131-6559	1	Frame-End, Drive
100	98-7715	1	Plate-Retainer
110	98-7716	4	Screw-Head, Round
120	98-7717	2	Bolt-Through
130	133-2811	1	Bearing
140	107-9087	1	Frame-End

Ref.	Part Number	Qty.	Description
150	107-0140	1	Cover-End
160	127-1612	1	Rectifier ASM
170	98-7722	1	Bushing-Insulation
180	107-0141	1	Brush Holder ASM
190	98-7724	2	Brush
200	98-7725	2	Spring-Brush
210	98-7726	2	Screw-Head, Round
220	98-7727	6	Screw-Head, Round
230	98-7728	1	Screw-Head, Round
240	98-7729	3	Bolt
250	98-7730	2	Nut
260	98-7731	2	Bolt
270	98-7732	1	Nut
280	110-3799	1	Regulator ASM

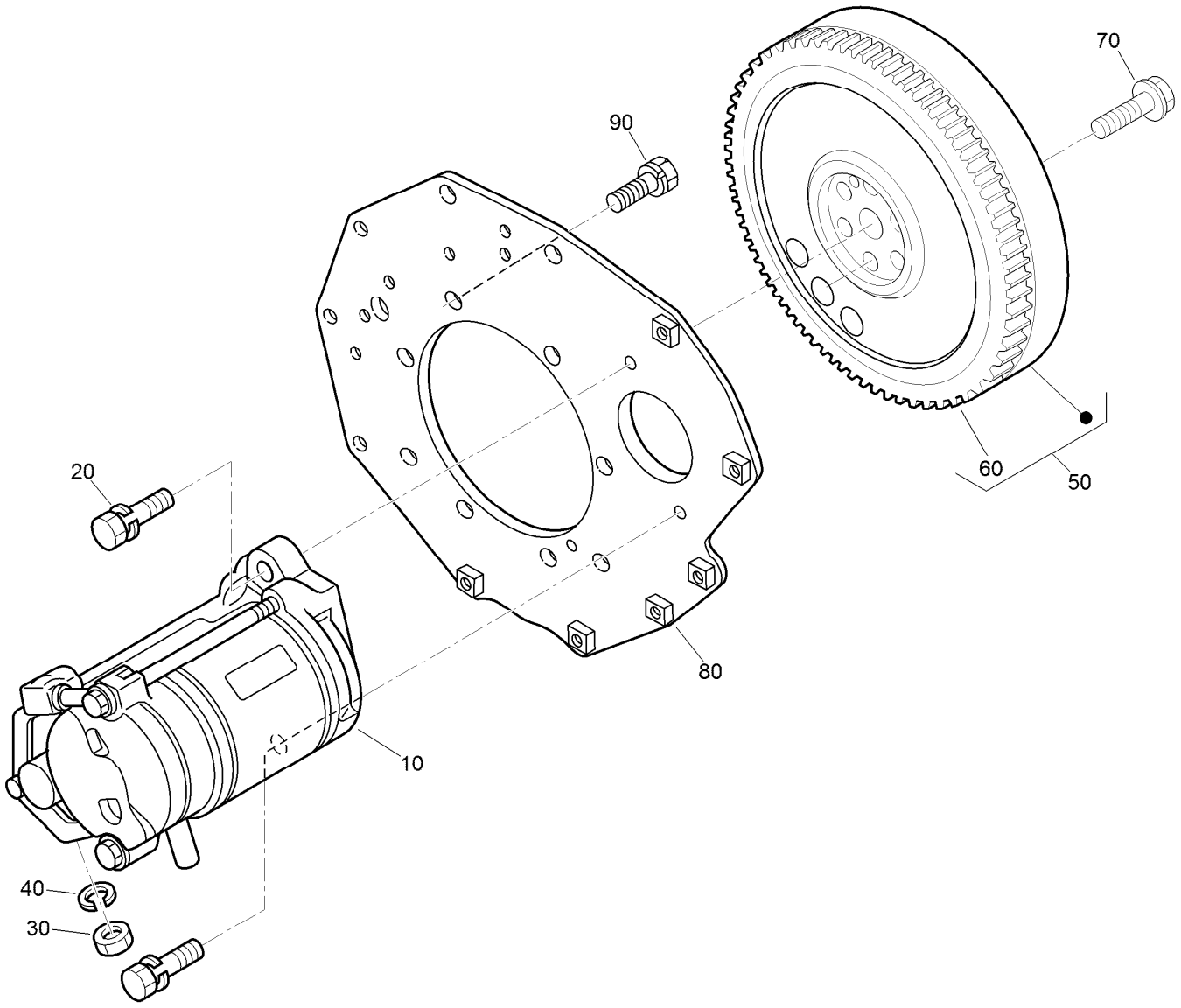

Starter and Flywheel Assembly

Ref.	*Part Number*	*Qty.*	*Description*
10	131-6561	1	Starter ASM
20	98-7697	2	Bolt
30	98-7739	1	Nut
40	105-2893	1	Washer-Spring
50	105-3784	1	Flywheel ASM
60	115-3015	1	Gear-Ring
70	98-9537	6	Bolt-Flywheel
80	98-9486	1	Plate-End, Rear
90	98-9392	8	Bolt

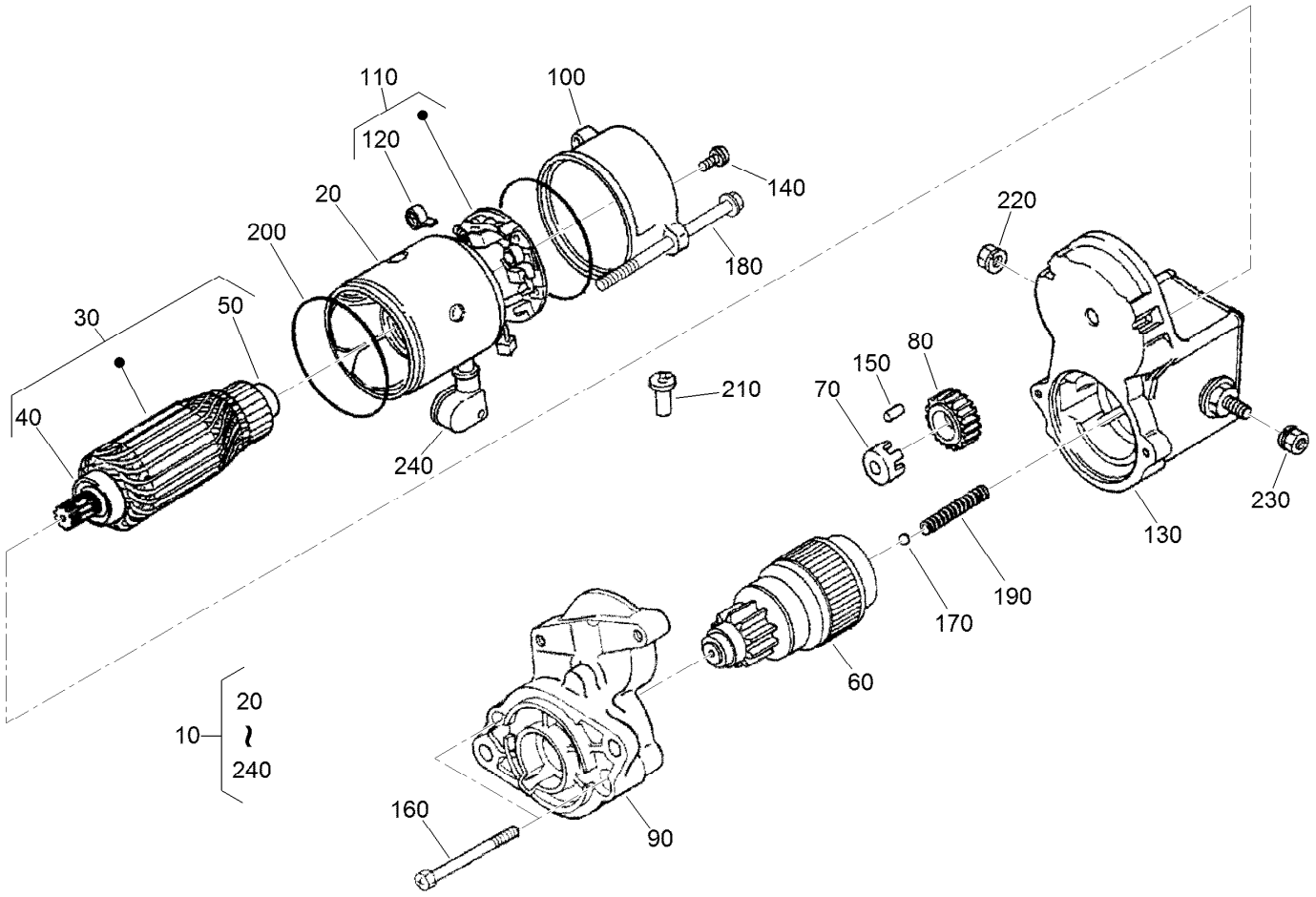

Starter Assembly No. 131-6561

Ref.	Part Number	Qty.	Description
10	131-6561	1	Starter ASM
20	98-7741	1	Yoke ASM
30	98-7742	1	Armature ASM
40	98-7744	1	Bearing
50	98-7743	1	Bearing
60	99-8373	1	Clutch-Running, Over
70	98-7752	1	Retainer
80	98-7751	1	Gear
90	99-8374	1	Frame-End, Drive
100	98-7748	1	Frame-End
110	98-7749	1	Brush Holder ASM
120	98-7750	4	Spring-Brush

Ref.	Part Number	Qty.	Description
130	99-8372	1	Magnetic Switch ASM
140	98-7758	2	Bolt ASM
150	98-7753	5	Roller
160	98-7756	2	Bolt
170	98-7755	1	Ball
180	100-9240	2	Bolt
190	98-7754	1	Spring
200	98-7757	2	O-Ring
210	98-7759	1	Pipe-Drain
220	99-8376	1	Nut-Hex
230	98-7760	1	Nut-Hex
240	110-0020	1	Cover-Terminal

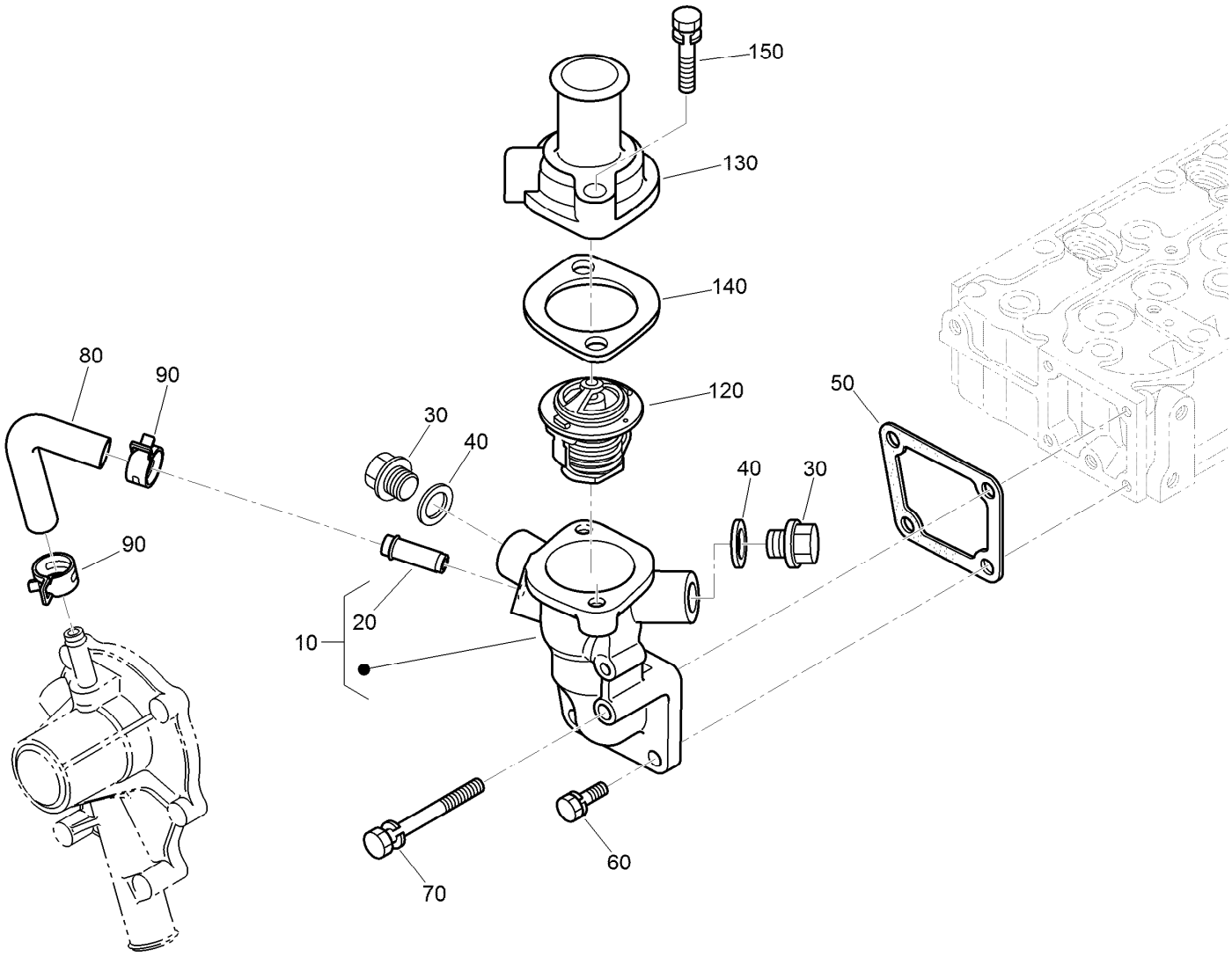

Water Flange and Thermostat Assembly

Ref.	*Part Number*	*Qty.*	*Description*
10	98-9713	1	Water Flange ASM
20	98-9580	1	Pipe-Return, Water
30	105-3747	2	Plug
40	99-3583	2	Gasket
50	98-9638	1	Gasket-Flange, Water
60	98-7692	3	Bolt
70	98-9356	1	Bolt
80	98-9578	1	Pipe-Return, Water
90	125-9078	2	Clamp-Hose
120	98-7778	1	Thermostat ASM
130	98-9471	1	Cover-Thermostat
140	105-3748	1	Gasket-Thermostat
150	98-7777	2	Bolt

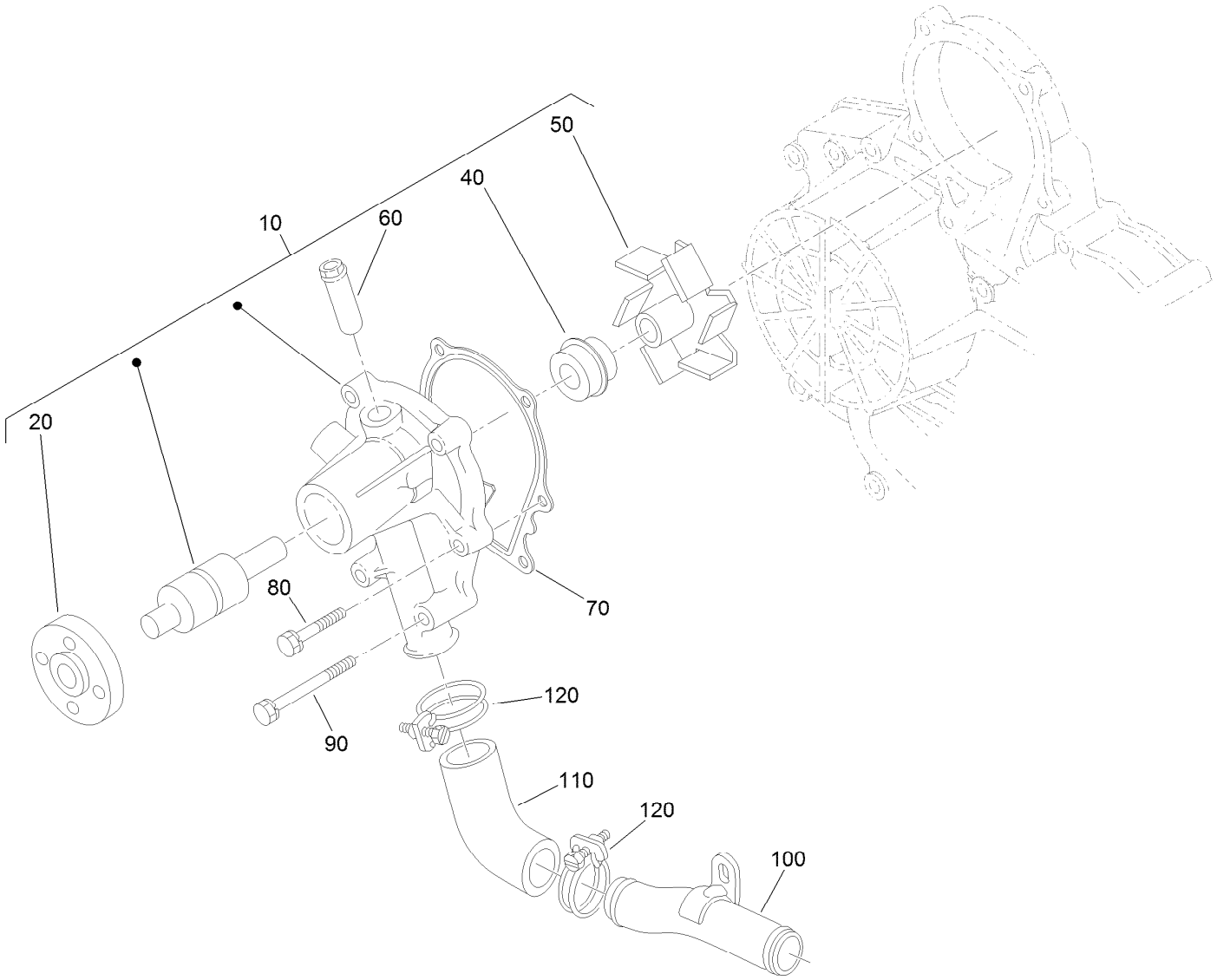

Water Pump Assembly

Ref.	*Part Number*	*Qty.*	*Description*
10	107-9089	1	Water Pump ASM
20	99-3516	1	Flange-Pump, Water
40	105-3750	1	Mechanical Seal ASM
50	112-7017	1	Impeller-Pump, Water
60	100-1932	1	Pipe-Return, Water
70	99-3454	1	Gasket-Pump, Water
80	98-9353	4	Bolt
90	107-9090	2	Bolt
100	98-9716	1	Pipe-Water
110	107-9091	1	Pipe-Water
120	127-0439	2	Clamp-Hose

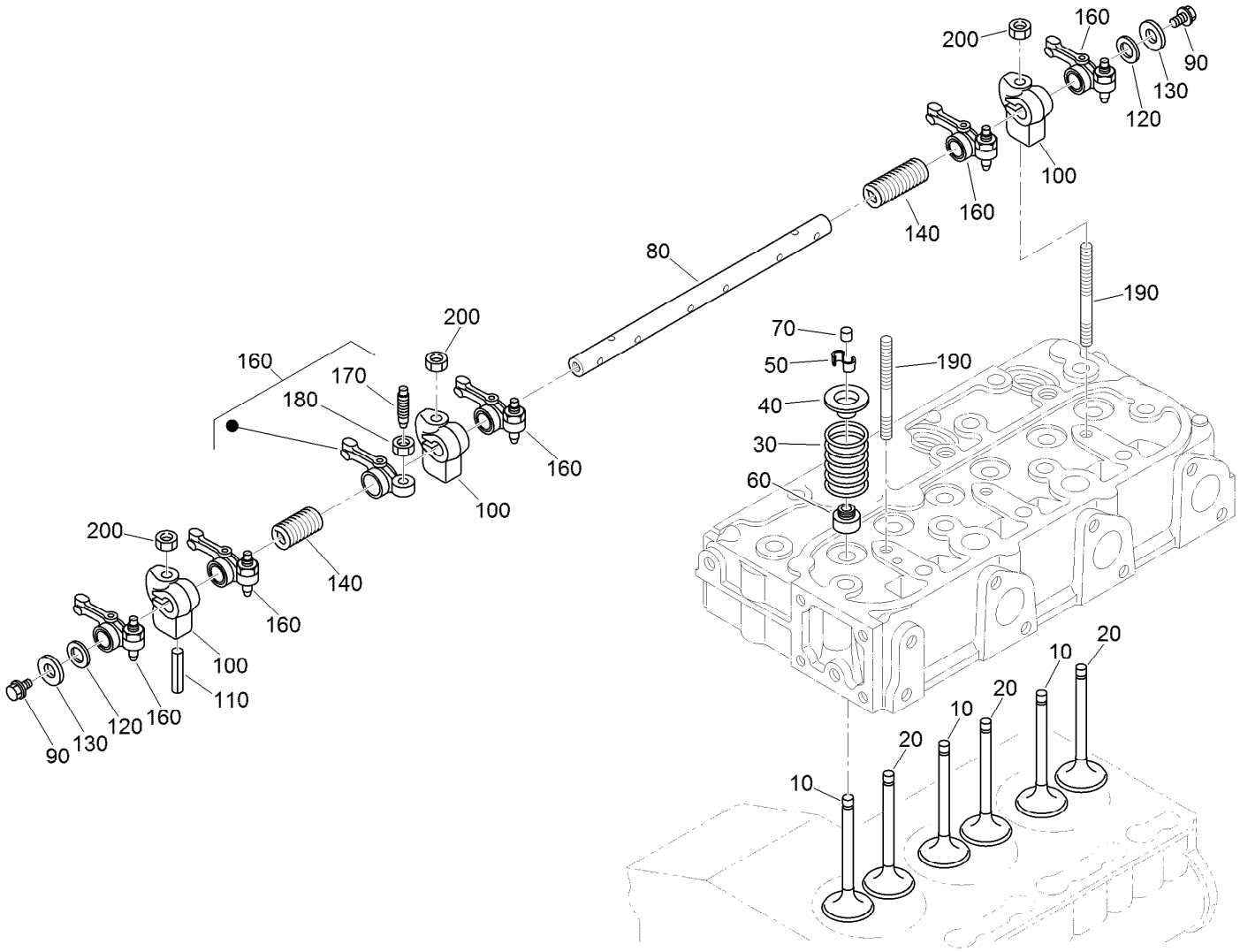

Valve and Rocker Arm Assembly

Ref.	Part Number	Qty.	Description
10	112-7018	3	Valve-Inlet
20	120-2564	3	Valve-Exhaust
30	98-9648	6	Spring-Valve
40	107-9092	6	Retainer-Spring
50	117-7572	6	Collet-Spring, Valve
60	99-8385	6	Seal-Stem, Valve
70	98-9497	6	Cap-Valve
80	130-1248	1	Shaft-Arm, Rocker
90	99-8363	2	Bolt-Flange
100	98-9505	3	Bracket-Arm, Rocker
110	105-3758	1	Pin-Spring
120	98-9507	2	Washer-Shaft, Rocker Arm
130	110-3832	2	Washer-Plain
140	98-9504	2	Spring-Arm, Rocker
160	112-7020	6	Rocker Arm ASM
170	98-9502	6	Screw-Adjusting
180	98-9503	6	Nut
190	98-9506	3	Stud
200	131-6563	3	Nut-Flange

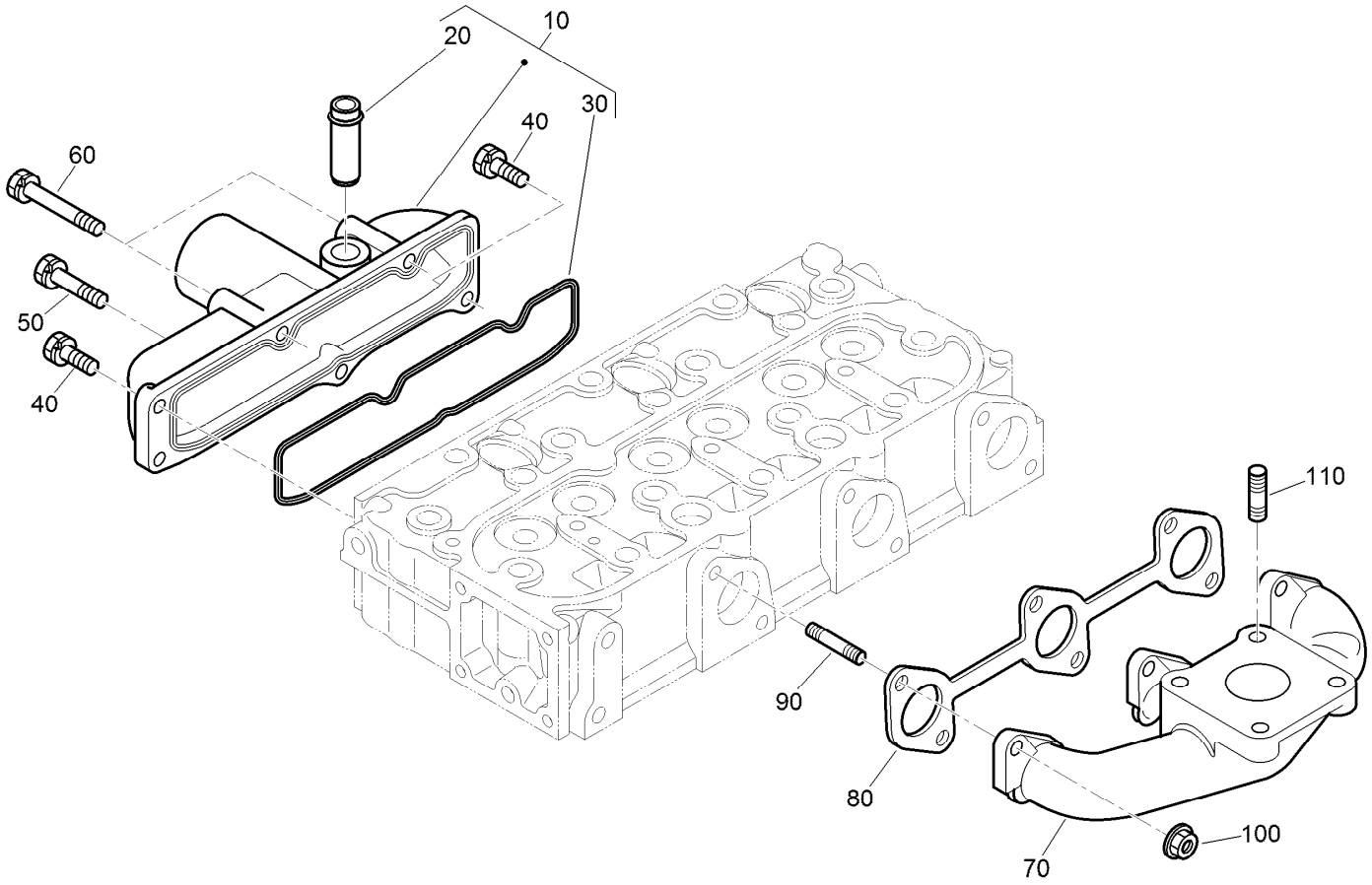

Inlet and Exhaust Manifold Assembly

Ref.	*Part Number*	*Qty.*	*Description*
10	108-6577	1	Inlet Manifold ASM
20	98-9492	1	Joint-Pipe, Breather
30	98-9609	1	Gasket-Manifold, Inlet
40	127-0403	3	Bolt-Flange
50	98-9353	1	Bolt
60	125-9063	2	Bolt-Sems
70	107-9093	1	Manifold-Exhaust
80	99-8327	1	Gasket-Manifold, Exhaust
90	98-9588	6	Stud
100	98-9665	6	Nut
110	98-7769	4	Stud

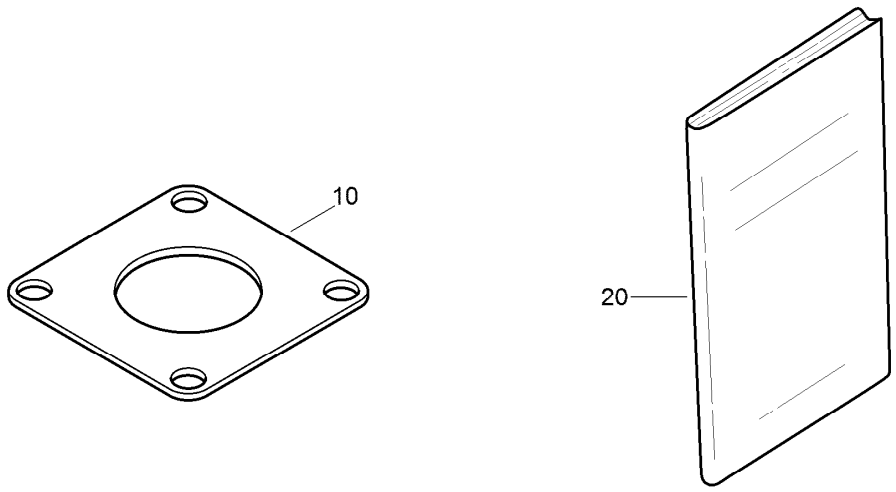

Miscellaneous Engine Parts

Ref.	*Part Number*	*Qty.*	*Description*
10	99-8343	1	Gasket-Muffler
20	130-1543	1	Manual-Operator

Attachments and Accessories

For 03950 Reelmaster 5010-H Traction Unit

Product Name	Model/Part
Operator Cooling Fan	03247
Switch Panel-Universal Sunshade	03248
Operator Golf Ball Guard, Reelmaster 3100/3500/5010 or Groundsmaster 3500/4300 Series Traction Unit	03614
5 Inch Reel Verticutter	03618
Verticutter for 7in Reel Cutting Unit	03619
8-Blade EdgeSeries Radial Reel DPA Cutting Unit with 5in Reel, Reelmaster 5010 Series Traction Unit	03621
11-Blade EdgeSeries Forward Swept Reel DPA Cutting Unit with 5in Reel, Reelmaster 5010 Series Traction Unit	03623
22in 5in 11 Bld (rr) Dpa Cu (5010)	03624
8-Blade Radial Reel DPA Cutting Unit with 7in Reel	03638
8-Blade Forward Swept Reel DPA Cutting Unit with 7in Reel	03639
11-Blade Forward Swept Reel DPA Cutting Unit with 7in Reel	03641
7-in, 11 Blade ES (RR) DPA Cutting Unit	03643
CrossTrax All-Wheel Drive Kit, Reelmaster 5010-H, 5410-D, or 5510-D Series Traction Unit	03645
Finishing Kit, DPA Cutting Unit with 5in Reel, Reelmaster 5010-H Series Traction Unit	03651
Finishing Kit, DPA Cutting Unit with 7in Reel, Reelmaster 5010-H Series Traction Unit	03653
CrossTrax All-Wheel Drive Finishing Kit	03656
Air Ride Seat Suspension Kit	03667
Turf Evaluator	04399
Wheel Weight Kit	104-1478
Premium All Purpose Grease (Tube)	108-1190
Rear Lift Cylinder Limit Kit	110-9604
5in Air Cleaner Safety Element	114-4057
Premium Synthetic Bio-Degradable Hydraulic Fluid (5 Gallon Pail)	119-2157
Premium Synthetic Bio-Degradable Hydraulic Fluid (55 Gallon Drum)	119-2158
Premium Engine Oil 10w30 (55 Gallon Drum)	121-6392
Premium Engine Oil 10w30 (5 Gallon Pail)	121-6393
Smooth Rear Tire	127-2796
Hi-Back Seat Cover	133-1308
Smooth Front Tire	133-2940
PX Hydraulic Fluid (5 Gal)	133-8086
PX Hydraulic Fluid (55 Gal)	133-8087
Pin and Lanyard Asm	136-8045
Beacon Kit	138-2699
Power Harness Kit (RM5XXX)	138-2994
Work Lights Kit, Groundsmaster and Reelmaster Traction Units with Universal Sunshade	140-1554
MVP Kit-Hyd Hose	145-2576
Mvp Kit 1000 Hour-rm5010-h Kubota D11	145-2581
Brush and Handle Kit	29-9100
White Universal Sunshade	30669
Red Universal Sunshade	30671
EU Light Kit	31579

Attachments and Accessories (continued)

New Red Paint - Gallon 361-11
Dark Metallic Gray Aerosol Paint 361-12
Semi-Gloss Black Spray Paint 361-9
Air Dry Red Paint - Qt 5340
Spark Arrestor 98-9099

Notes:

Notes:

Notes:



Count on it.