Form No. 3453-886 Rev D

TORO®

Count on it.

Parts Catalog

323 Compact Tool Carrier

22318—409810000

CE

Ordering Replacement Parts

To order replacement parts, please supply the part number, the quantity, and the description of each part desired.

Understanding Reference Numbers

Each identified part in an illustration has a reference number. The reference number for a part also appears in the parts list, along with other information about the part.

This catalog uses two special reference number formats, one to indicate parts in a service assembly and another to indicate the quantity of a given part in an illustration.

Service Assembly Reference Numbers

Parts in service assemblies have reference numbers in the form a:b. The a represents the reference number of the entire service assembly and the b represents a sequential number unique to each part within the service assembly.

For example, a wheel assembly might be identified by reference number 6, the tire by 6:1, the valve by 6:2, and the wheel by 6:3. When you order the assembly identified by reference number 6, you receive all parts identified by reference numbers 6:1,6:2, and 6:3. However, you may also order any part individually. Reference numbers of this type appear in illustration and in parts lists.

Reference Numbers Indicating Quantity

In an illustration, if a reference number indicates more than one part, the reference number has the form nX y. The n represents the quantity of the part, the X is the multiplication symbol, and the y represents the reference number.

For example, in an illustration, the reference number 2X 37 means that two of the parts identified by reference number 37 are indicated.

Contents

Frame Assembly 4
Hood and Screen Assembly 6
Thigh Support Assembly 8
Wheel and Tire Assembly 10
Hydraulic Motor Assembly No. 99-3052 12
Engine and Hydraulic Pump Assembly 14
Tandem Hydraulic Pump Assembly No. 108-4710 16
Fuel Tank and Air Filter Assembly 18
Air Cleaner Assembly No. 93-2190 20
Carbon Canister Assembly 22
Loader and Quick Attach Assembly 24
Electrical Component Assembly 26
Hydraulic Tank and Filter Assembly 28
Auxiliary Control Lever Assembly 30
Auxiliary Valve and Selector Valve Assembly 32
Auxiliary Hydraulic Valve Assembly No. 99-3077 34
Hydraulic Selector Valve Assembly No. 99-3072 36
Four Spool Valve and Lever Assembly 38
Four Spool Hydraulic Valve Assembly No. 105-8377 40
Hydraulic Motor Assembly 42
Counterbalance Valve Assembly No. 99-3040 44
Hydraulic Cylinder Assembly 46
Hydraulic Cylinder Assembly No. 139-7706 48
Attachments and Accessories 50

© 2025—The Toro® Company
8111 Lyndale Avenue South
Bloomington, MN 55420

www.Toro.com.
Printed in the USA.

Frame Assembly

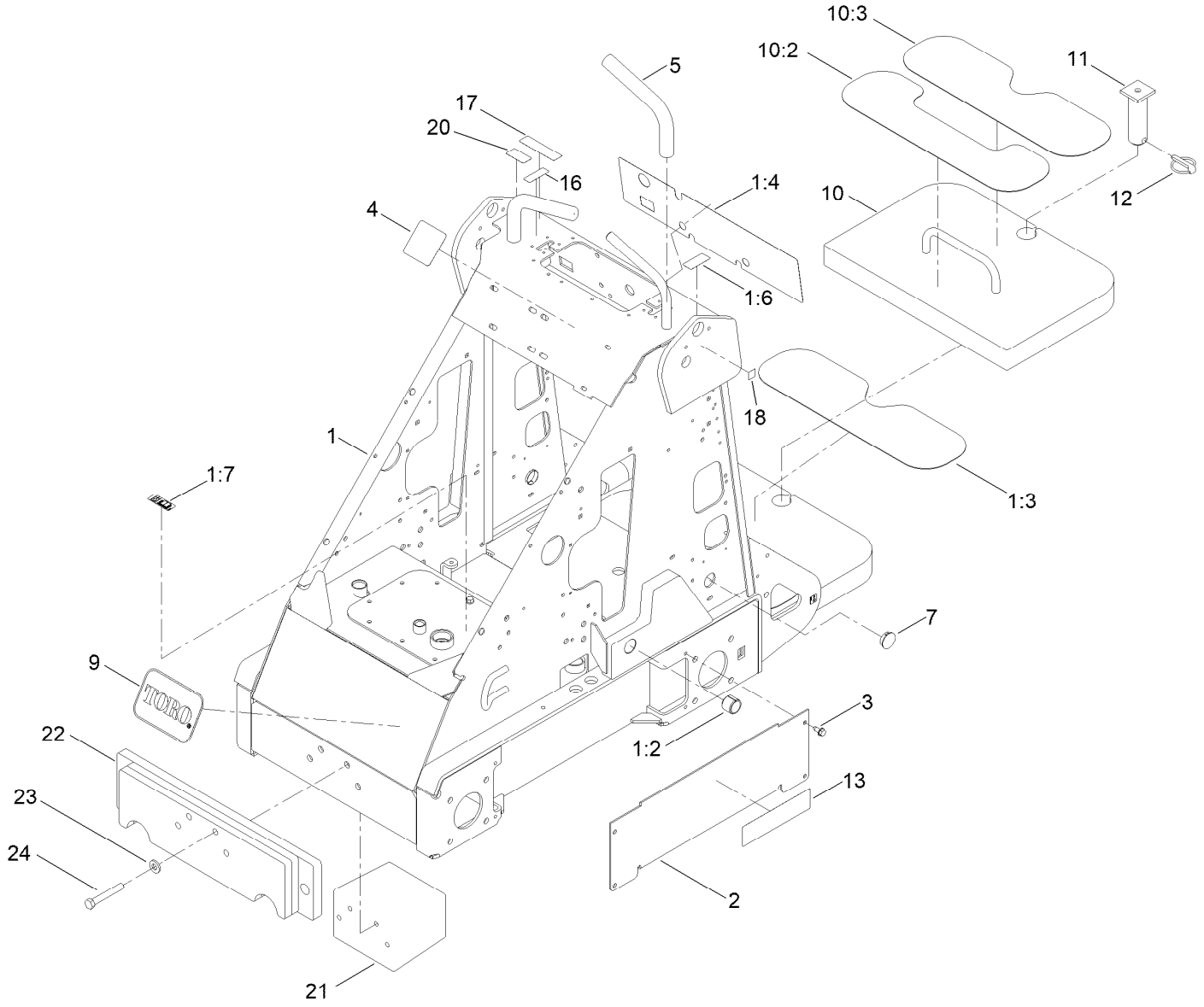

Frame Assembly (continued)

Ref.	Part Number	Qty.	Description
1	108-9710	1	Frame ASM
1:2	98-4871	2	Bushing-Tension
1:3	98-9947	2	Tread-Foot
1:4	144-2025	1	Decal-Control Panel
1:6	98-8219	1	Decal-Throttle
1:7	93-6686	1	Decal-Oil, HYD
2	106-8178-01	2	Cover-Hose
3	32144-70	8	Screw-HWHTF
4	108-9716	1	Decal-Selector, Speed
5	98-4845	2	Grip-Cushion
7	94-1402	2	Plug-Hole
9	62-5550	1	Decal
10	112-4947	1	Counterweight ASM
10:2	98-9947	1	Tread-Foot
10:3	112-4948	1	Tread
11	99-8638	1	Pin
12	99-9978	1	Pin-Lynch
13	105-8429	2	Decal
16	94-2551	1	Decal-Choke
17	133-8062	1	Decal-Spark Arrestor
18	93-9084	4	Decal-Point, Lift
20	98-4387	1	Decal-Protection, Ear
21	139-7704	1	Weight-Front, Counter
22	144-7148-03	1	Weight-Counter [black]
23	HDW01729	4	Washer,1/2,F436 Hard,F/W,YZN
24	325-14	4	Screw-HH

Hood and Screen Assembly

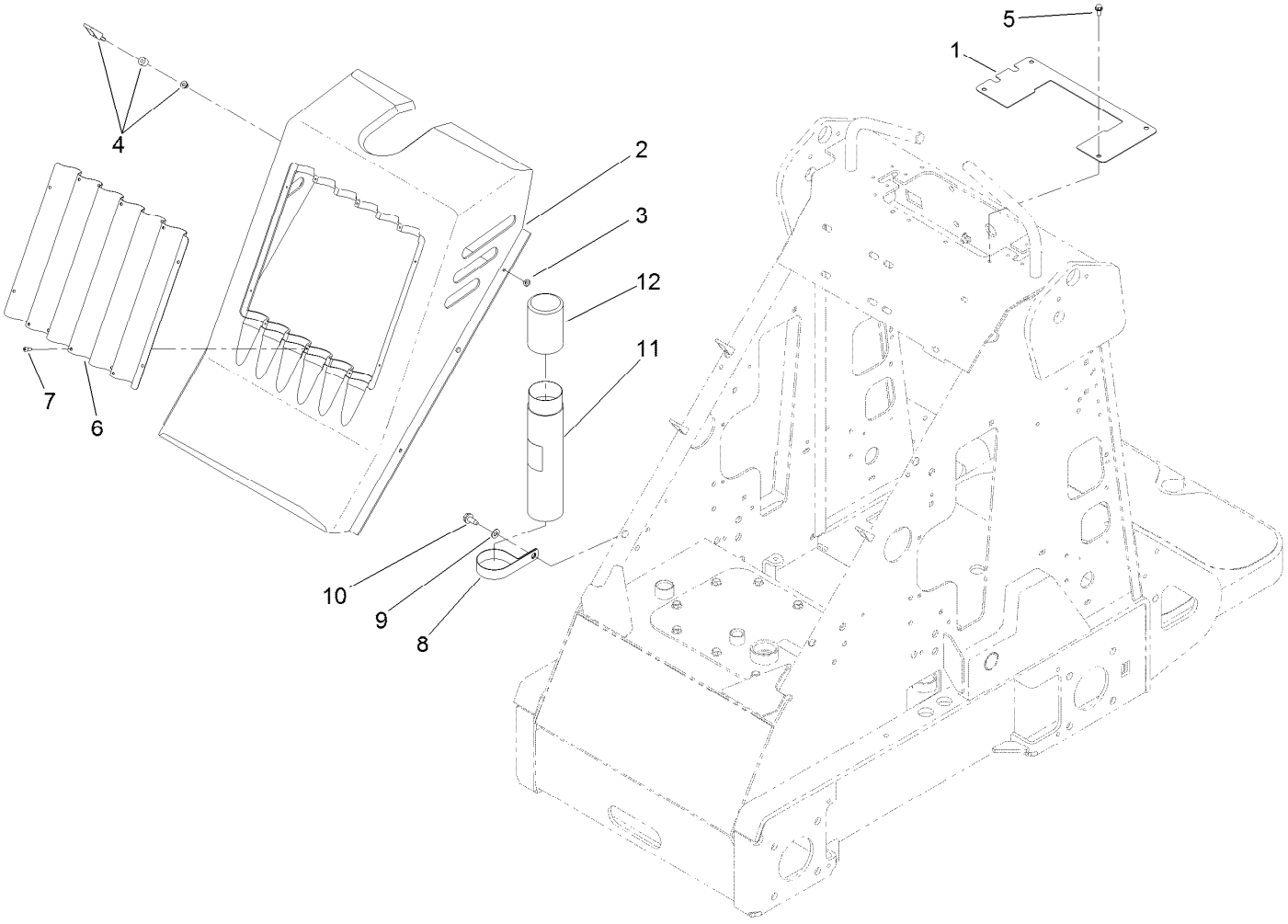

Hood and Screen Assembly (continued)

Ref.	Part Number	Qty.	Description
1	108-9731-03	1	Plate-Cover
2	99-3164	1	Cover-Hood
3	99-3058	4	Washer
4	74-5950	4	Latch-Swell
5	32144-4	4	Screw-HWH
6	99-3147-03	1	Grille-Screen
7	32144-111	10	Screw-PPH
8	2412-133	1	Clamp-R
9	3256-23	1	Washer-Plain
10	32144-70	1	Screw-HWHTF
11	104-7050	1	Tube-Manual
12	104-7048	1	Cap-Housing

Thigh Support Assembly

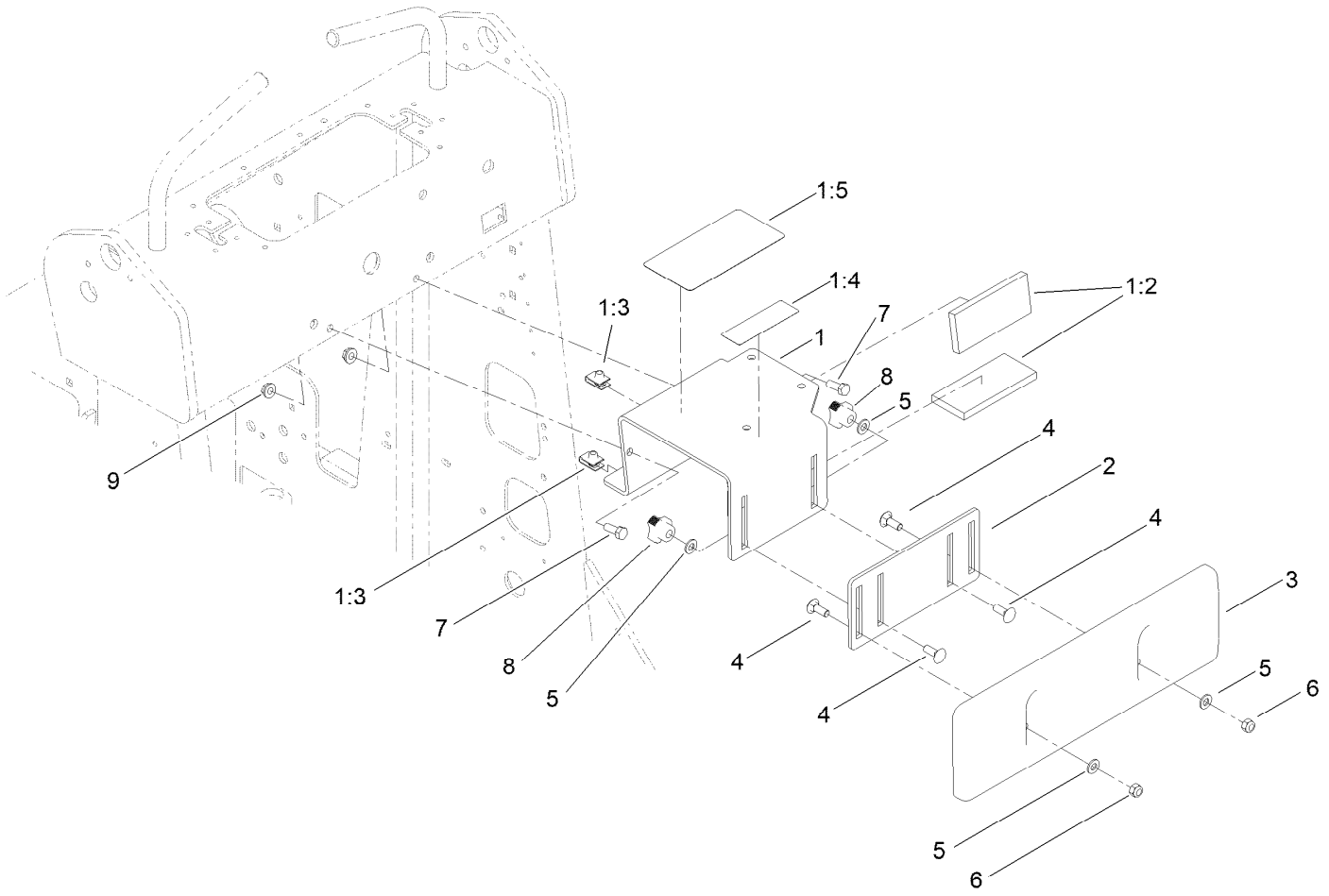

Thigh Support Assembly (continued)

Ref.	Part Number	Qty.	Description
1	117-1813	1	Thigh Support Bracket ASM
1:2	117-1798	2	Pad-Foam
1:3	115-7721	2	Nut-Clip, U
1:4	104-6108	1	Decal-Manual
1:5	139-8815	1	Decal-Service Tx323
2	105-0337-03	1	Plate-Adjusting
3	105-0333	1	Support-Thigh
4	3230-16	4	Screw-CARR
5	3256-70	4	Washer-Flat
6	3296-72	2	Nut-Lock, NI
7	322-4	2	Screw-HH
8	104-6156	2	Knob-Adjustment
9	32128-20	2	Nut-HF

Wheel and Tire Assembly

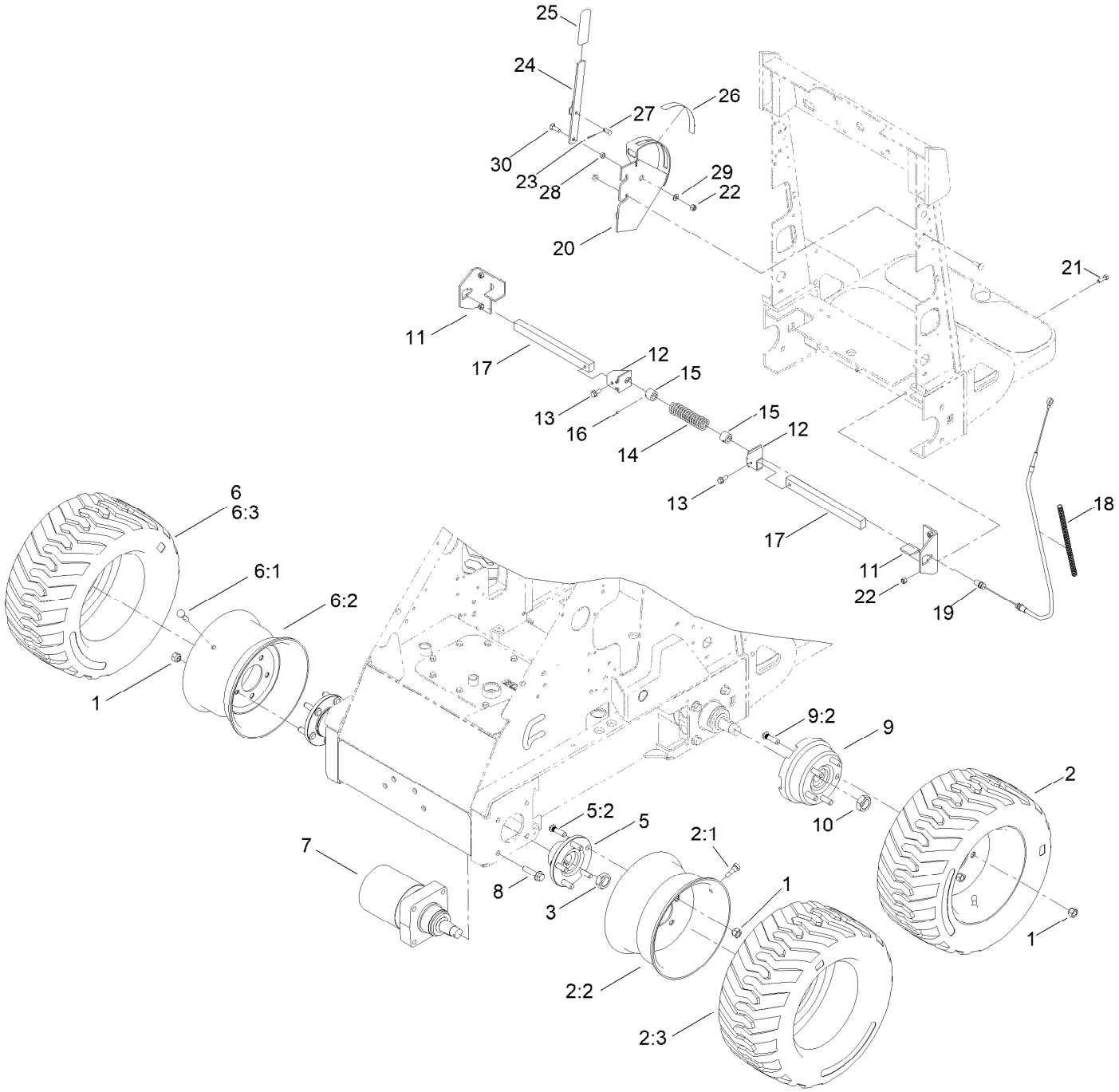

Wheel and Tire Assembly (continued)

Ref.	Part Number	Qty.	Description
1	242-50	20	Nut-Lug
2	98-2747	2	LH Wheel And Tire ASM
2:1	232-27	1	Stem-Valve
2:2	98-2748	1	Wheel
2:3	98-2749	1	Tire
3	106-8159	4	Nut-Hex Jam Lck
5	99-3064	2	Hub ASM
5:2	10-6830	5	Stud-Type, Drive
6	99-1447	2	RH Wheel And Tire ASM
6:1	232-27	1	Stem-Valve
6:2	98-2748	1	Wheel
6:3	98-2749	1	Tire
7	99-3052	4	HYD Motor ASM
8	3234-27	16	Screw-HHF
9	105-4056	2	Wheel Hub ASM
9:2	10-6830	5	Stud-Type, Drive
10	106-8159	2	Nut-Hex Jam Lck
11	100-1676-03	2	Bracket-Brake
12	100-1677-03	2	Bracket-Cable
13	100-1668	2	Screw-HHF
14	100-1678-03	1	Spring
15	100-6274	2	Tube-Guide
16	3245-20	2	Screw-Set
17	100-1674-03	2	Bar-Brake
18	100-4697	1	Tube-Convoluted
19	100-1679	1	Cable
20	105-8414-03	1	Plate-Brake
21	322-5	4	Screw-HH
22	3296-29	5	Nut-Lock, NI
23	3272-6	1	Pin-Cotter
24	100-1684-03	1	Lever-Brake
25	62-9130	1	Grip-Handle
26	100-1692	1	Decal-Brake
27	283-62	1	Pin-Clevis
28	100-1683	1	Hub-Lever
29	3256-23	1	Washer-Plain
30	3230-22	1	Screw-CARR

Hydraulic Motor Assembly No. 99-3052

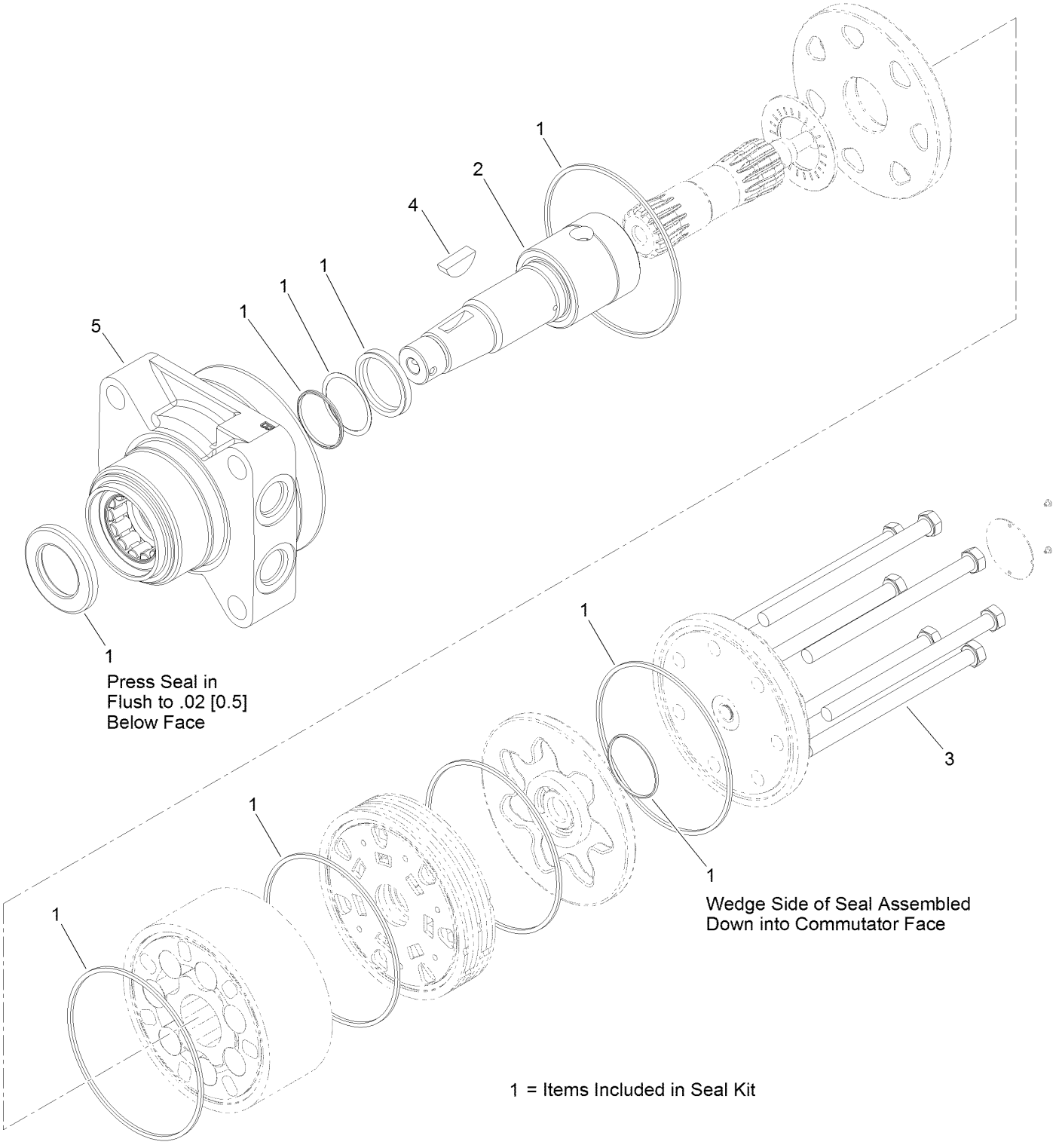

1 = Items Included in Seal Kit

Hydraulic Motor Assembly No. 99-3052 (continued)

Ref.	Part Number	Qty.	Description
1	100-6131	1	Seal Kit
2	99-3090	1	Shaft-Coupling
3	99-3091	7	Screw-Cap, HH
4	3257-42	1	Key-Woodruff
5	120-5392	1	Motor Housing ASM

Engine and Hydraulic Pump Assembly

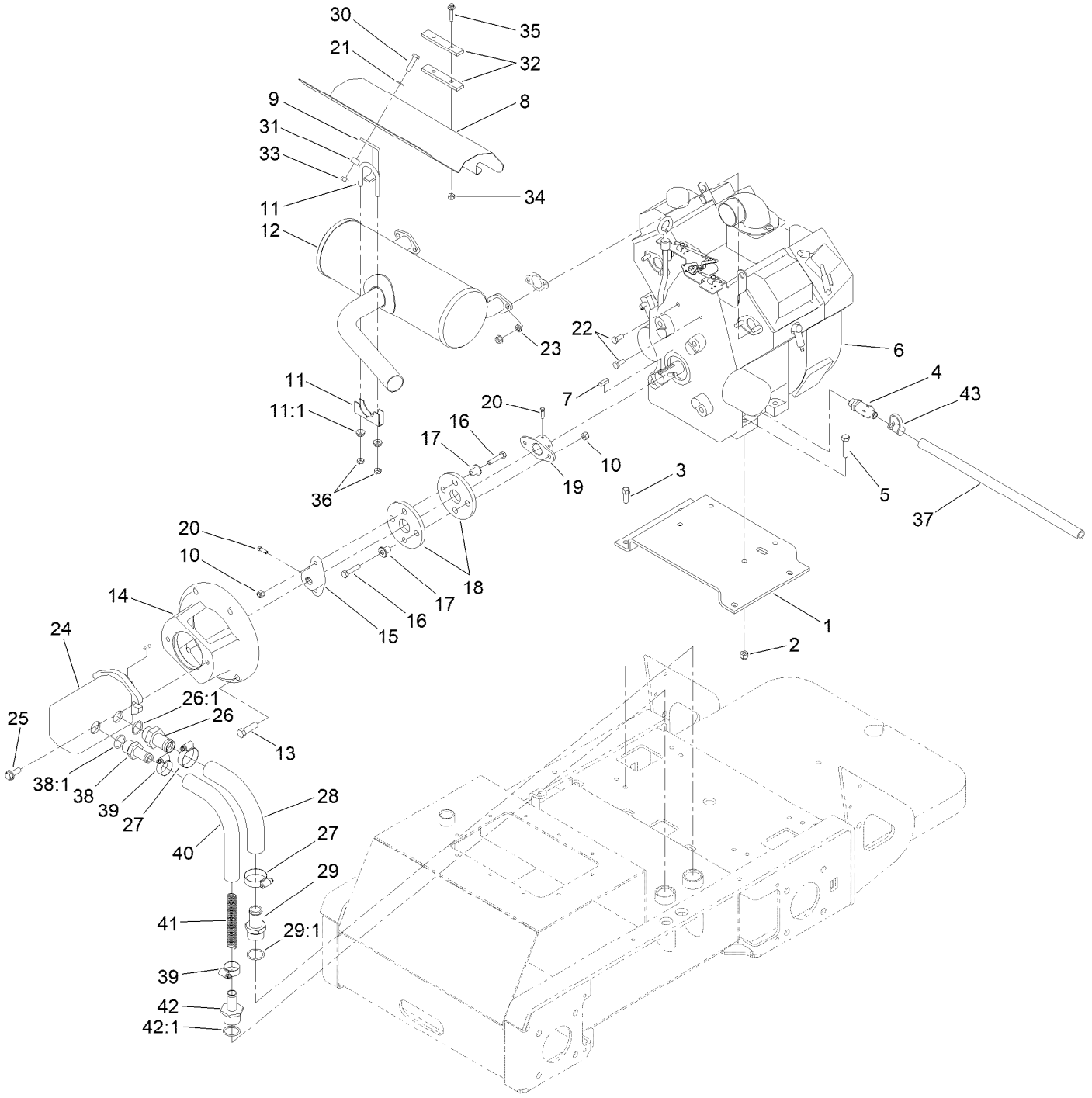

Engine and Hydraulic Pump Assembly (continued)

Ref.	Part Number	Qty.	Description
1	98-4666-03	1	Mount-Engine
2	3296-39	4	Nut-Lock, NI
3	95-1726	4	Screw-Taptite
4	92-6877	1	Valve-Drain, Oil
5	323-9	4	Screw-HH
6		1	Engine-Kohler, Ch680-3136 [l] [n]
7	10-7070	1	Key-Square
8	99-3115-03	1	Shield-Muffler
9	99-3138-03	1	Support-Shield
10	3296-29	4	Nut-Lock, NI
11	2112-9	1	Clamp
11:1	32128-20	2	Nut-HF
12	105-8381	1	Muffler
13	324-6	4	Screw-HH
14	98-2751-03	1	Mount-Pump
15	98-4701	1	Hub-Pump
16	322-7	4	Screw-HH
17	71-4411	4	Spacer
18	115-4523	2	Coupling-Rubber
19	110-5236	1	Hub-Engine
20	3241-6	4	Screw-SQH
21	3256-23	1	Washer-Plain
22	33114-020	2	Screw-HH
23	3253-4	4	Washer-Lock
24	108-4710	1	HYD Pump ASM
25	66-9300	2	Screw-HHF
26	99-3017	1	Fitting
26:1	237-81	1	O-Ring
27	2412-111	2	Clamp-Hose, W/Liner
28	99-3046	1	Hose-Suction, Formed
29	354-78	1	Fitting-STR
29:1	237-146	1	O-Ring
30	322-6	1	Screw-HH
31	98-4695	1	Spacer
32	99-3116-03	2	Spacer-Bar
33	32152-1	1	Nut-Lock
34	32152-4	2	Nut-Lock, Cone
35	3234-21	2	Screw-HHF
36	3218-2	2	Nut-Hex Jam
37	98-4667	1	Hose
38	354-73	1	Fitting
38:1	237-81	1	O-Ring
39	2412-129	2	Clamp-Hose
40	98-2713	1	Hose-Suction, HYD
41	99-5349	1	Spring-Compression
42	99-6932	1	Fitting-STR
42:1	237-117	1	O-Ring
43	354-79	1	Cap-Dust

[l] Not serviced separately

[n] Obtain parts from www.kohlerplus.com

Tandem Hydraulic Pump Assembly No. 108-4710

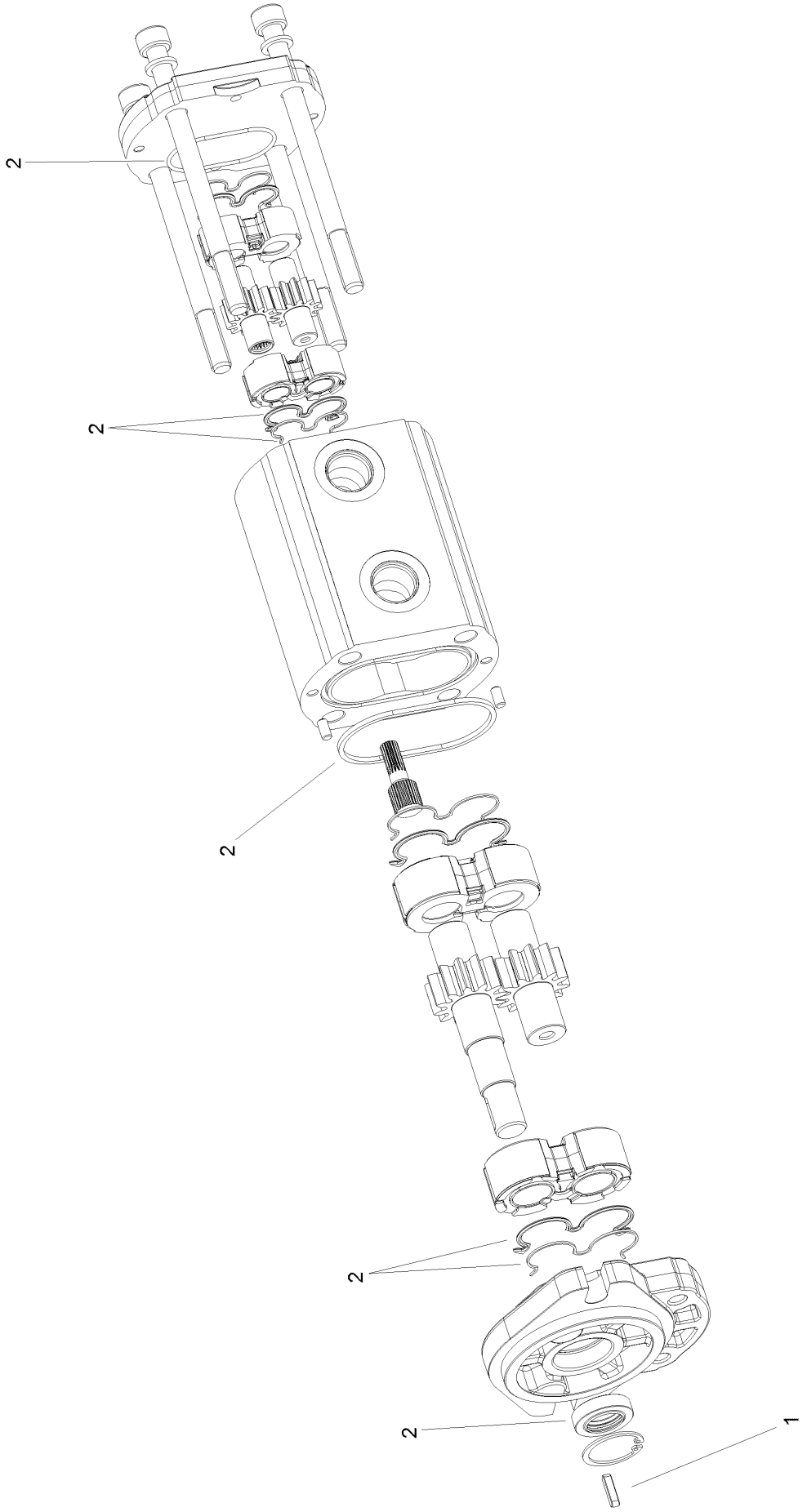

Tandem Hydraulic Pump Assembly No. 108-4710 (continued)

Ref.	*Part Number*	*Qty.*	*Description*
1	98-4700	1	Key-Square
2	99-1353	1	Seal Kit

Fuel Tank and Air Filter Assembly

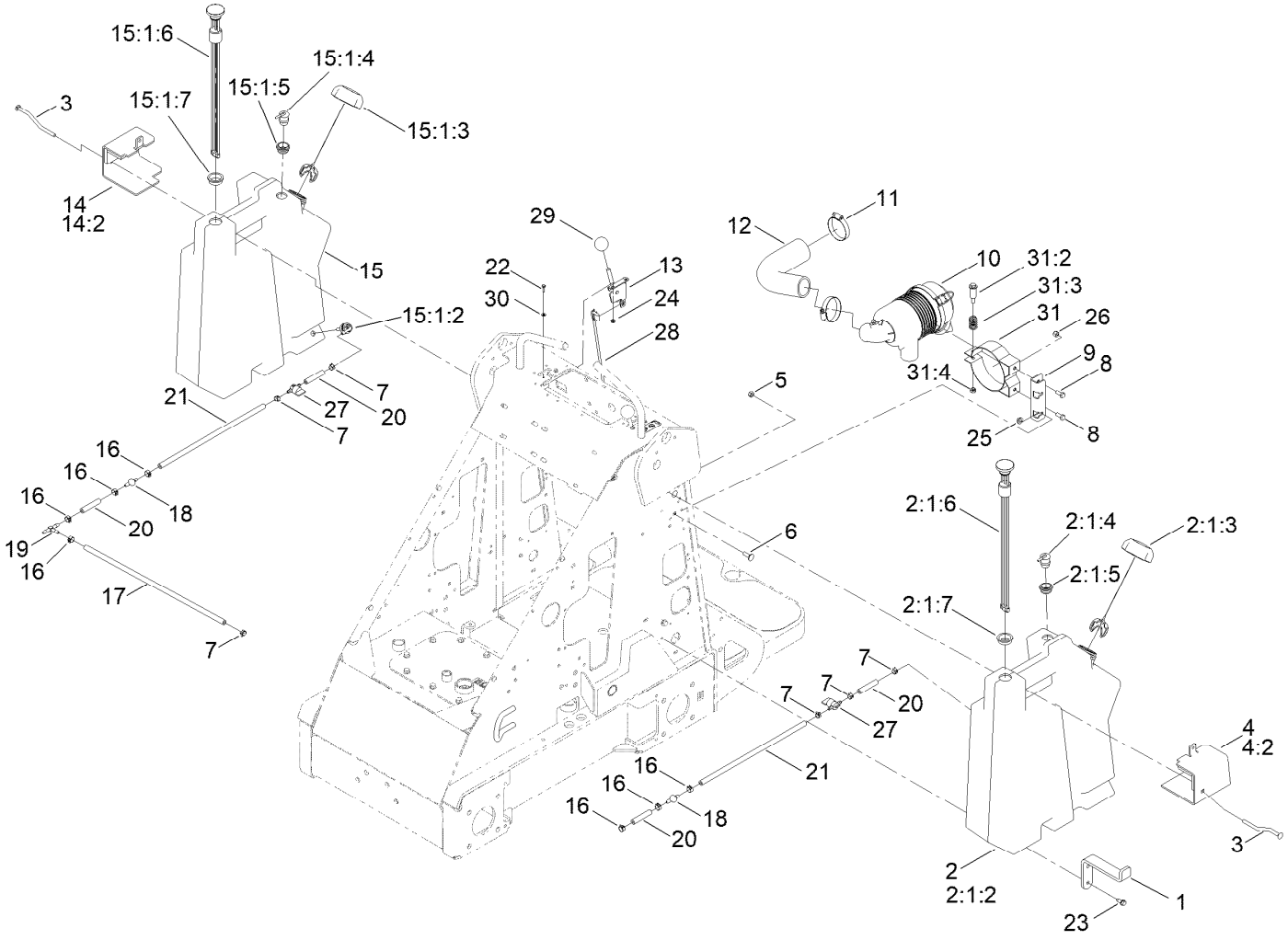

Fuel Tank and Air Filter Assembly (continued)

Ref.	Part Number	Qty.	Description
1	117-1777-03	2	Mount-Tank, Bottom
2	140-7236	1	Tank-Fuel, LH
2:1:2	103-2605	1	Fitting-Fuel, Bulkhead
2:1:3	115-7788	1	Cap-Fuel
2:1:4	114-0285	1	Valve-Rollover
2:1:5	114-0284	1	Grommet
2:1:6	104-5603	1	Gauge-Level, Fuel
2:1:7	95-8972	1	Grommet
3	98-4657	2	Bolt-Mount
4	117-1801	1	LH Tank Mount ASM
4:2	117-1798	2	Pad-Foam
5	32153-3	2	Nut-Hex, Side Deform
6	3230-2	2	Bolt-CARR
7	2412-98	7	Clamp-Hose
8	322-3	2	Screw-HH
9	99-3080-03	1	Mount-Cleaner, Air
10	93-2190	1	Air Cleaner ASM
11	2412-42	2	Clamp-Hose
12	99-3148	1	Hose-Air
13	108-9730	2	Lever-Control
14	117-1802	1	RH Tank Mount ASM
14:2	117-1798	2	Pad-Foam
15	140-7235	1	Tank-Fuel,RH
15:1:2	103-2605	1	Fitting-Fuel, Bulkhead
15:1:3	115-7788	1	Cap-Fuel
15:1:4	114-0285	1	Valve-Rollover
15:1:5	114-0284	1	Grommet
15:1:6	104-5603	1	Gauge-Level, Fuel
15:1:7	95-8972	1	Grommet
16	92-2379	7	Clamp-Hose
17	110-5701	1	Hose-Fuel
18	99-5000	2	Valve-Check, Fuel
19	99-5005	1	Fitting-Tee, Barbed
20	109-0304	4	Hose-Fuel
21	109-0296	2	Hose-Fuel
22	3290-134	4	Screw
23	32144-70	4	Screw-HWHTF
24	32149-7	4	Nut-Keps
25	32128-20	2	Nut-HF
26	3296-29	2	Nut-Lock, NI
27	1-603770	2	Valve-Fuel
28	108-4718	2	Cable-Control
29	233-42	2	Knob
30	3256-51	4	Washer-Flat
31	93-2191	1	Air Cleaner Mounting Band ASM
31:2	94-3653	1	Bolt
31:3	94-3654	1	Spring
31:4	48-9510	1	*obs* Nut

Air Cleaner Assembly No. 93-2190

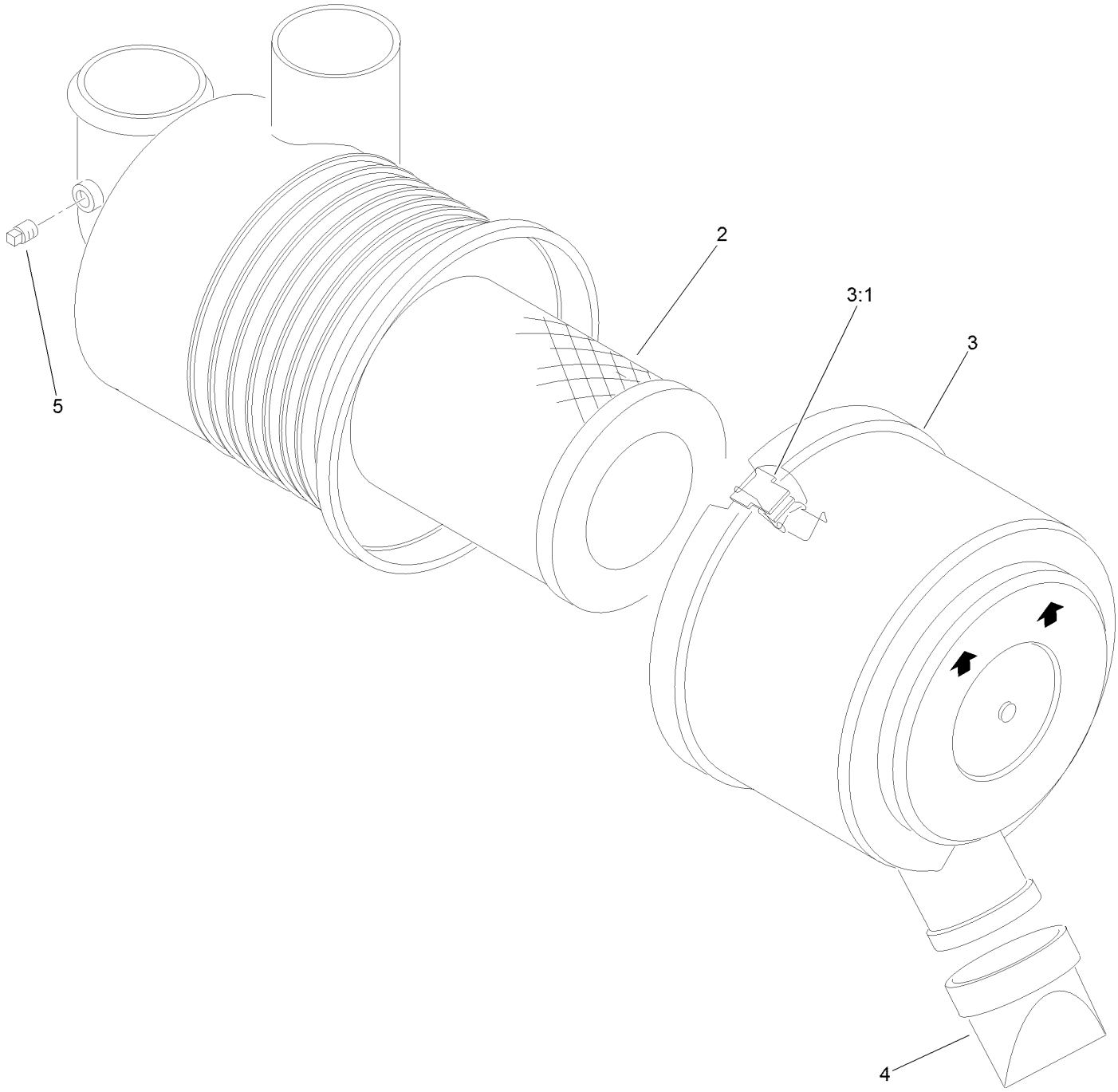

Air Cleaner Assembly No. 93-2190 (continued)

Ref.	Part Number	Qty.	Description
2	108-3811	1	Filter-Air V-Twin HD
3	94-3652	1	Cover ASM
3:1	1-643283	2	Latch-Cleaner, Air
4	87-9400	1	Valve-Vacuator
5	285-17	1	Plug-Pipe

Carbon Canister Assembly

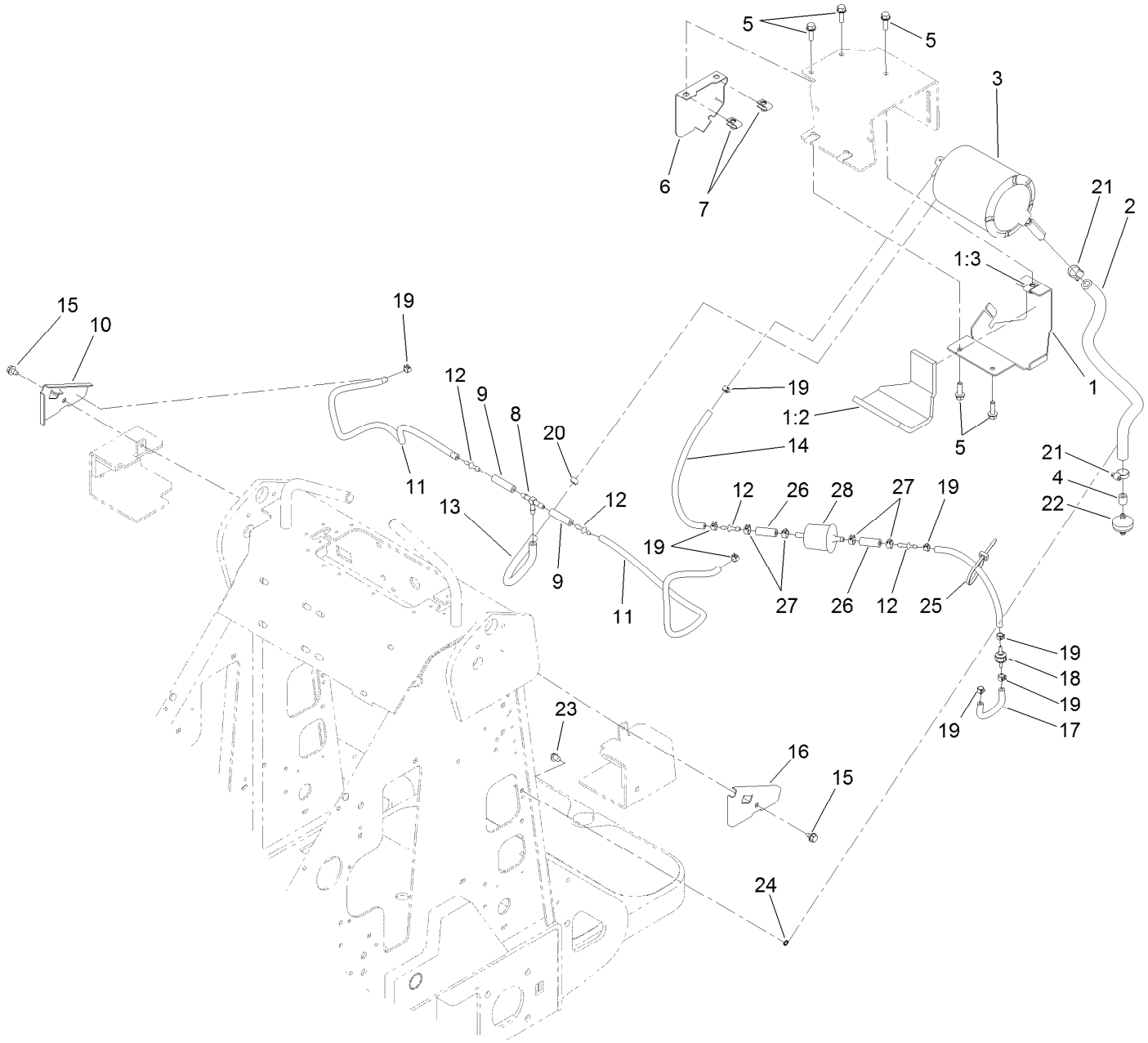

Carbon Canister Assembly (continued)

Ref.	Part Number	Qty.	Description
1	117-1821	1	Canister Mount ASM
1:2	117-1799	1	Pad-Foam
1:3	115-7721	1	Nut-Clip, U
2	106-5709	1	Hose-Vent
3	116-1442	1	Canister-Carbon, 1200Cc
4	117-1789	1	Hose-Fuel
5	3234-29	5	Screw-HHF
6	117-1785-03	1	Cover-Canister
7	115-7721	2	Nut-Clip, U
8	99-5005	1	Fitting-Tee, Barbed
9	99-9415	2	Hose-Fuel
10	117-1792-03	1	Plate-Hose Retainer, RH
11	119-6074	2	Hose-Fuel
12	106-8150	4	Fitting-Straight
13	109-0294	1	Hose-Fuel
14	51-3217	2	Hose-Fuel
15	9266934	2	Screw
16	117-1791-03	1	Plate-Hose Retainer, LH
17	115-4736	1	Hose-Fuel
18	133-8499	1	Valve-Check, Vacuum
19	2412-146	8	Clamp-Hose
20	2412-98	1	Clamp-Hose
21	2412-36	2	Clamp-Hose
22	115-7854	1	Filter-Fuel, Inline
23	32180-030	1	Clip-Tie
24	3254-8	1	Washer-Lock
25	3290-378	1	Tie-Cable
26	106-5317	2	Hose-Fuel
27	92-2379	4	Clamp-Hose
28	120-2235	1	Filter-Fuel

Loader and Quick Attach Assembly

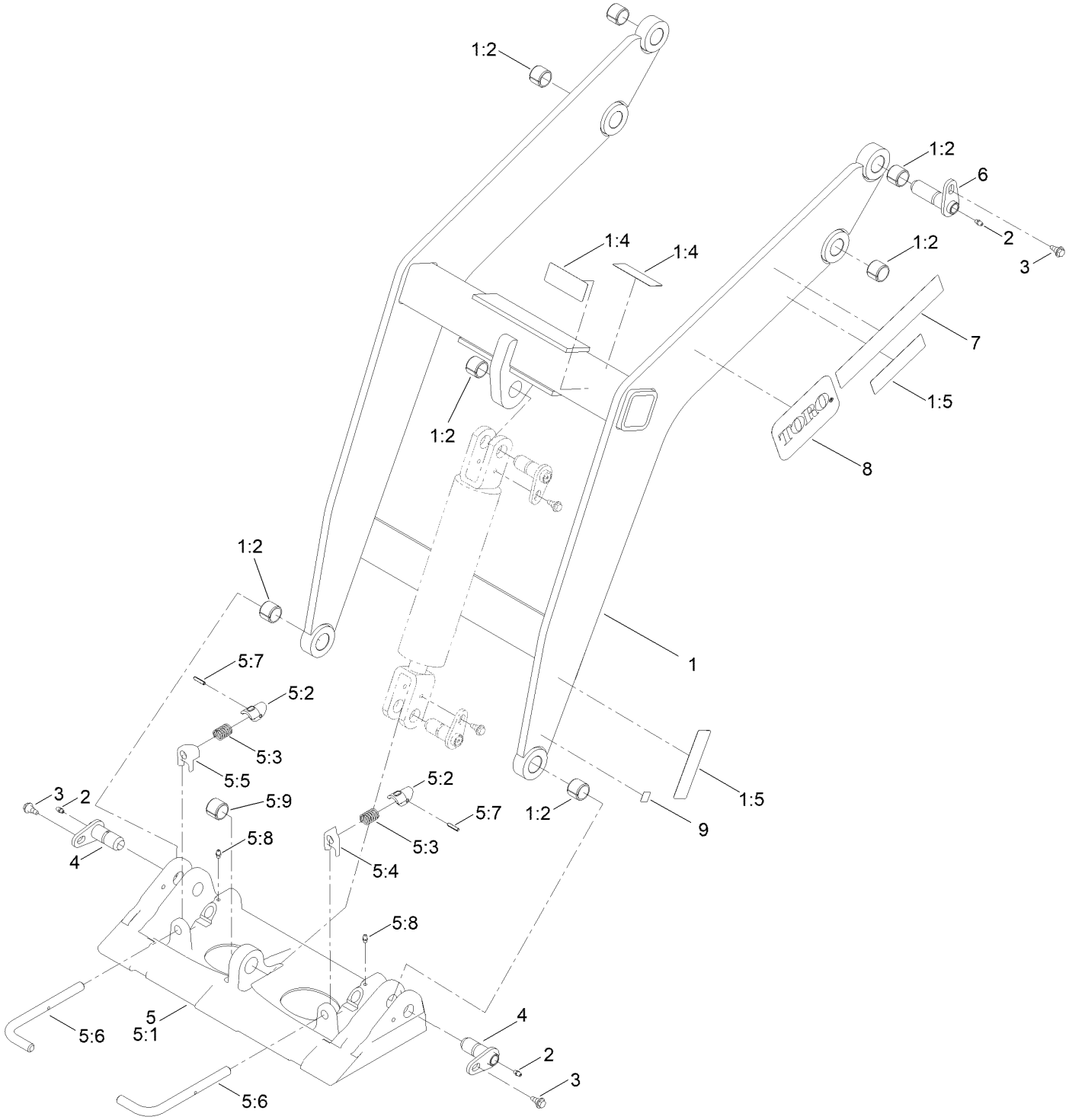

Loader and Quick Attach Assembly (continued)

Ref.	Part Number	Qty.	Description
1	106-8155	1	Loader ASM
1:2	98-4871	7	Bushing-Tension
1:4	130-2837	2	Decal-Warning, No Rider
1:5	130-2836	4	Decal-Warning, Crushing
2	302-5	4	Fitting-Grease
3	99-5105	4	Screw-Shoulder
4	112-2609	2	Pin-Pivot
5	132-8418	1	Quick Attach ASM
5:1	130-7708-03	1	Mount-Qtach
5:2	105-0246	2	Cam
5:3	98-4694	2	Spring-Compression
5:4	104-5909	1	Stop-RH
5:5	104-5903	1	Stop-LH
5:6	132-8419	2	Pin-Locking
5:7	3285-1	2	Pin-Grooved
5:8	302-5	2	Fitting-Grease
5:9	98-4871	1	Bushing-Tension
6	120-5363	2	Pin-Pivot
7	117-9980	2	Decal
8	93-7340	2	Decal
9	93-9084	2	Decal-Point, Lift

Electrical Component Assembly

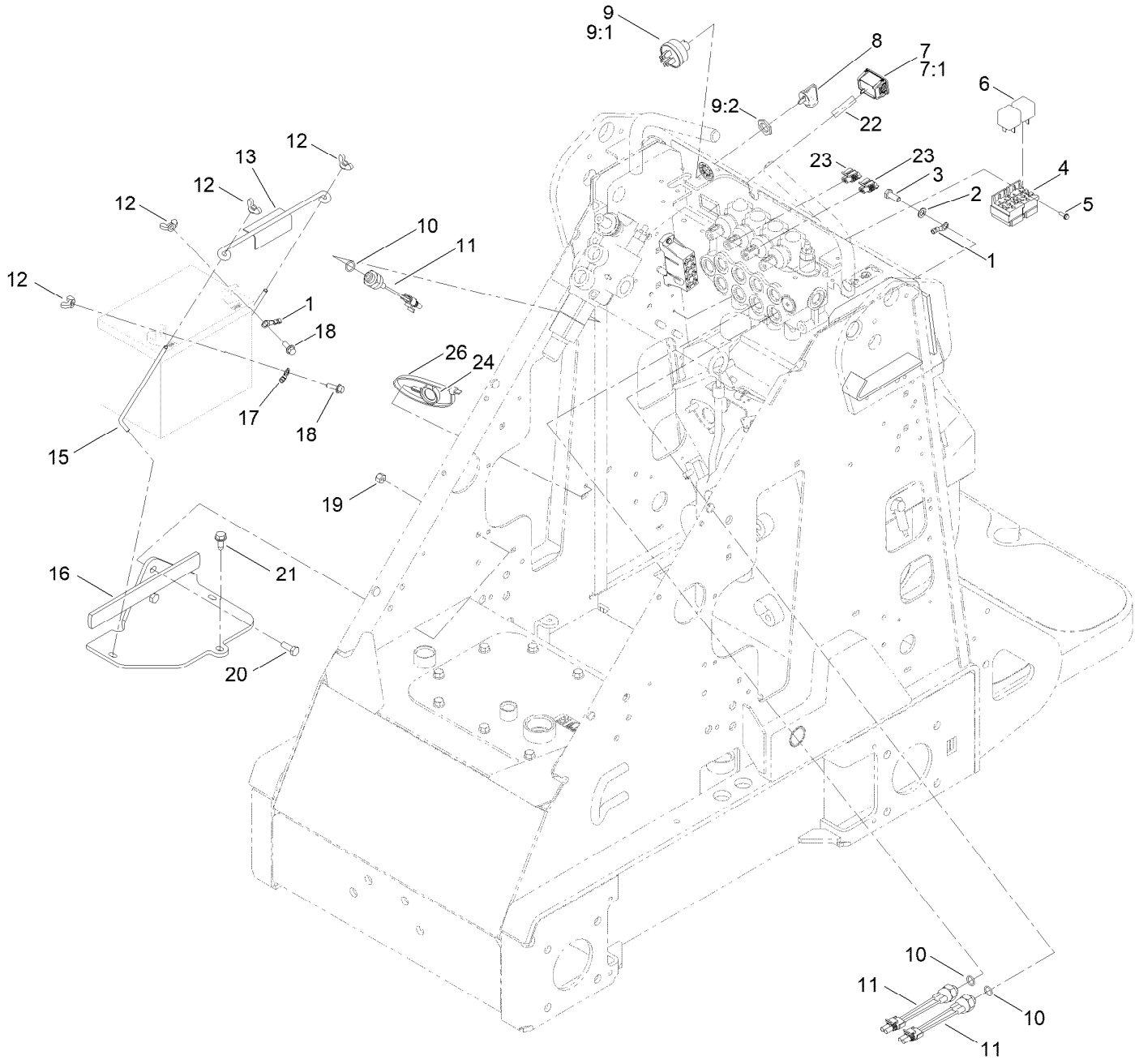

Electrical Component Assembly (continued)

Ref.	Part Number	Qty.	Description
1	111075	1	Wire ASM
2	3255-8	1	Washer-Lock
3	33114-020	1	Screw-HH
4	104-7411	1	Harness-Wire
5	32144-87	3	Screw-HWHTF
6	98-7249	2	Relay
7	105-4067	1	Hourmeter-Inductive
7:1	104-4234	1	Clip-Mounting
8	63-8360	2	Key-Ignition
9	111216	1	Ignition Switch ASM
9:1	9201604	1	Washer-Lock
9:2	101884	1	Nut
10	237-42	3	O-Ring
11	72-4310	3	Switch-Ball
12	32103-22	4	Nut-Wing
13	113010	1	Holddown-Battery
15	99-5027	2	Retainer-Battery
16	99-3060-03	1	Battery Mount ASM
17	100-1712	1	Cable-Positive
18	3234-4	2	Screw-HHF
19	3296-29	2	Nut-Lock, NI
20	322-4	2	Screw-HH
21	32144-70	1	Screw-HWHTF
22	104-7408	1	Wire-Hourmeter
23	99-1433	2	Connector-Female
24	32180-030	1	Clip-Tie
26	3334-945	1	Tie-Cable
99	3290-381	5	Tie-Cable [I]

[I] Not illustrated

Hydraulic Tank and Filter Assembly

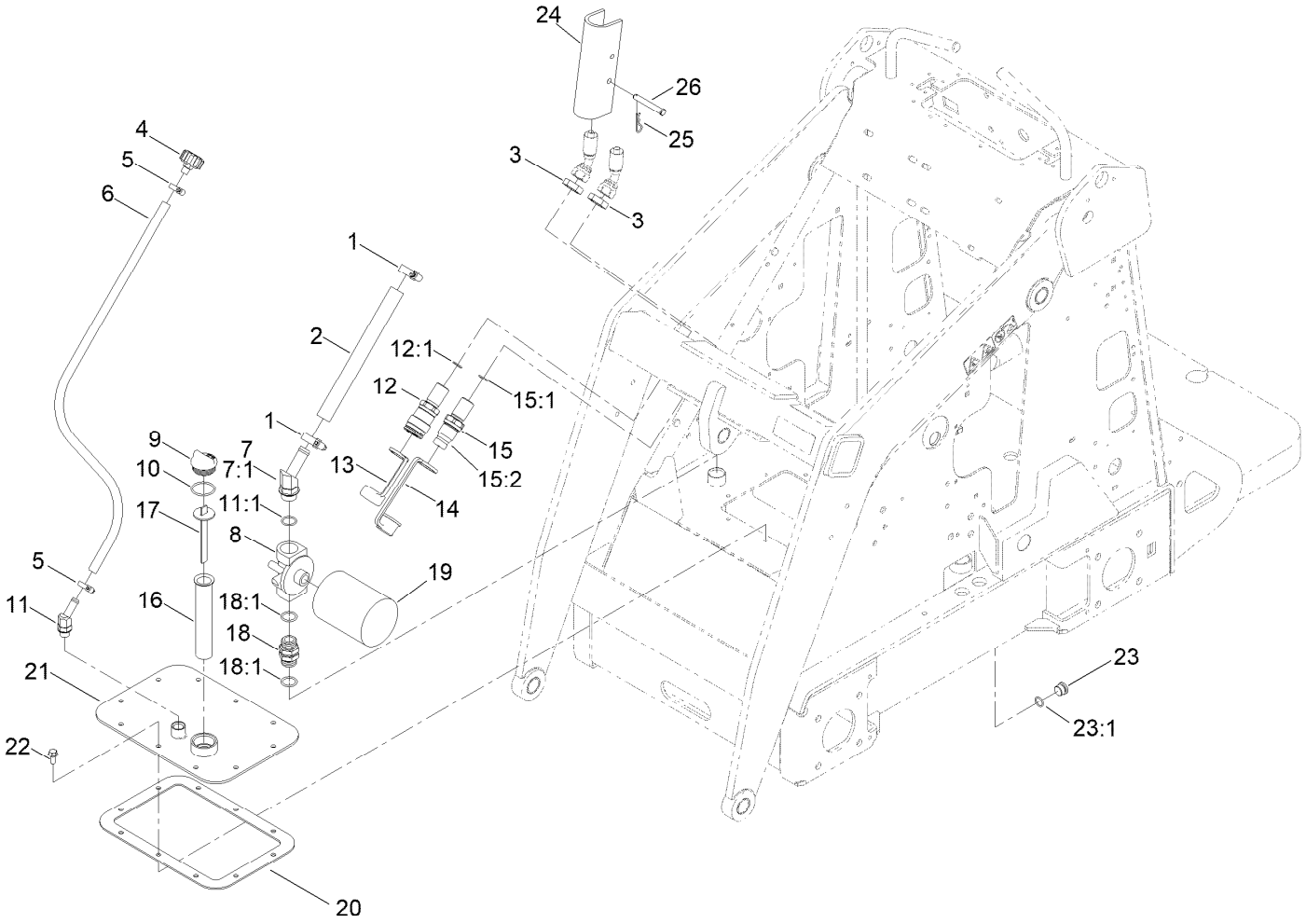

Hydraulic Tank and Filter Assembly (continued)

Ref.	Part Number	Qty.	Description
1	2412-129	2	Clamp-Hose
2	98-4745	1	Hose-HYD, Suction, Hi
3	340-74	2	Nut-Lock, Bulkhead
4	68-6150	1	Breather
5	2412-36	2	Clamp-Hose
6	98-2708	1	Hose-Vent
7	354-127	1	Fitting-Elbow45
7:1	237-81	1	O-Ring
8	92-5821	1	Head-Filter
9	93-7498	1	Plug-Plastic
10	237-101	1	O-Ring
11	354-126	1	Fitting-Elbow, 45
11:1	237-79	1	O-Ring
12	105-8394	1	Bulkhead Coupler ASM
12:1	237-65	1	O-Ring
13	100-8816	1	Cap-Dust, Coupler
14	100-8815	1	Cap-Dust, Nipple
15	105-8395	1	Bulkhead Nipple ASM
15:1	237-65	1	O-Ring
15:2	100-6120	1	Seal Kit [I]
16	61-2790	1	Filter-Screen
17	100-2097	1	Dipstick-Oil
18	98-9906	1	Fitting-Thread, Straight
18:1	237-81	2	O-Ring
19	54-0110	1	Filter-Oil, Transmission
20	98-9927	1	Gasket-Cover
21	100-1713-01	1	Cover
22	98-9940	10	Screw-HHF
23	353-988	1	Plug-Hex
23:1	237-79	1	O-Ring
24	98-4675-01	2	Lock-Cylinder
25	3290-467	2	Pin-Hair
26	283-52	2	Pin-Clevis

[I] Not illustrated

Auxiliary Control Lever Assembly

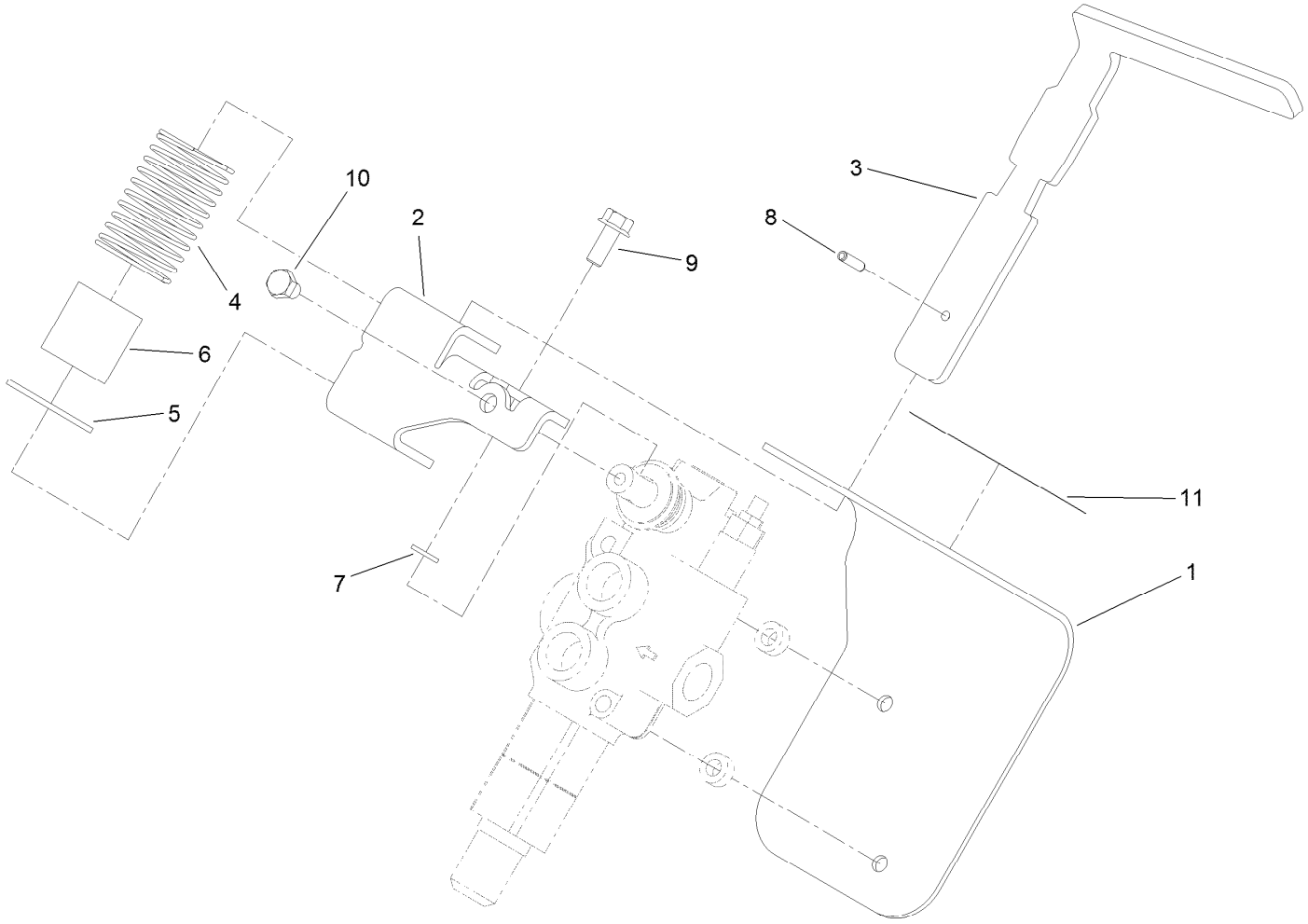

Auxiliary Control Lever Assembly (continued)

Ref.	Part Number	Qty.	Description
1	110-0121-03	1	Bracket-Auxiliary
2	114-1263-03	1	Mount-Lever, Auxiliary
3	110-0123	1	Handle-Lever, Auxiliary
4	110-0124	1	Spring
5	110-0125	1	Retainer-Spring, Auxiliary
6	110-0160	1	Tube-Spring
7	3253-4	1	Washer-Lock
8	32121-3	1	Pin-Spring
9	33104-020	1	Screw-HHF
10	33114-010	1	Screw-HH
11	108-4723	1	Decal-Auxiliary, CE

Auxiliary Valve and Selector Valve Assembly

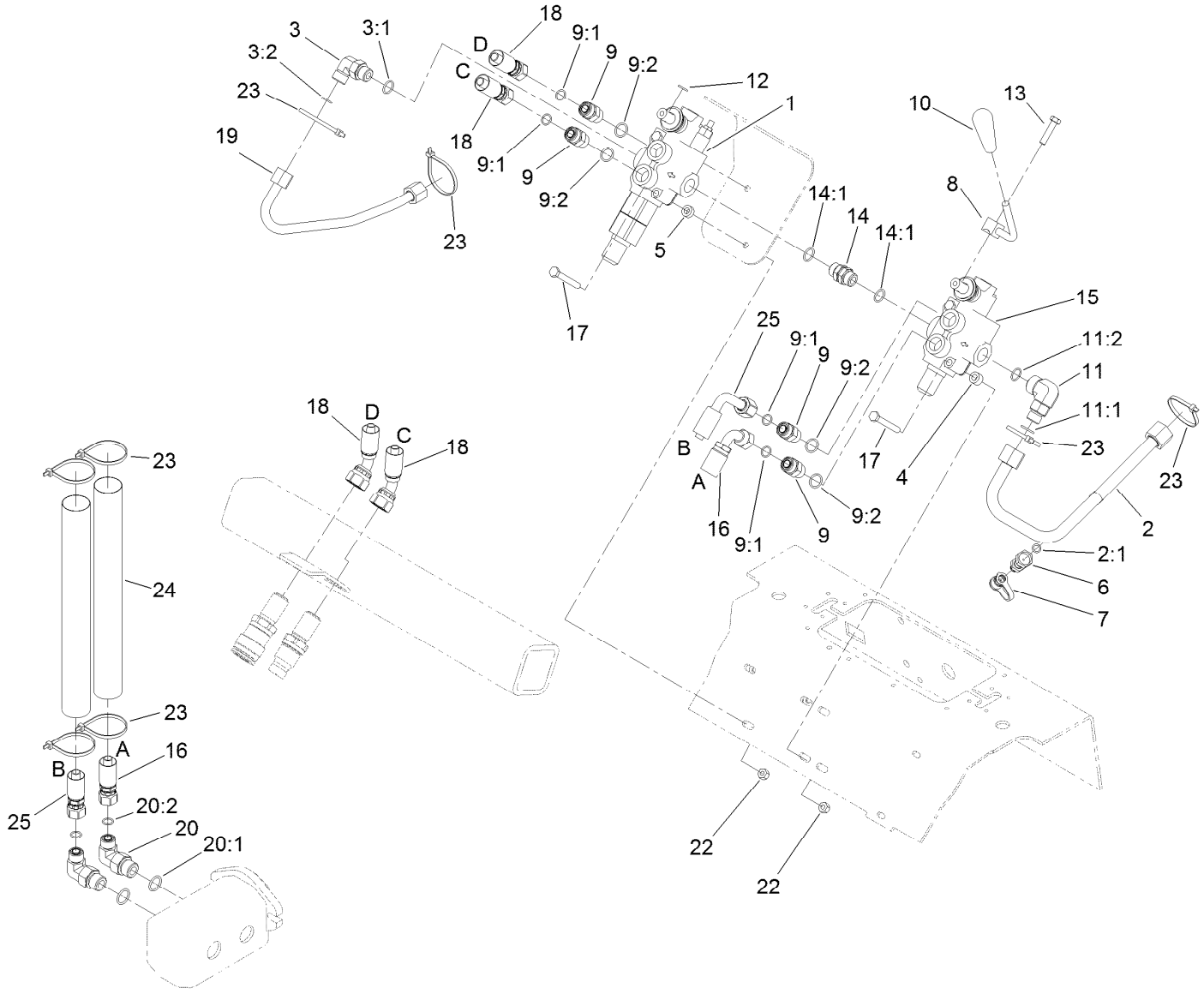

Auxiliary Valve and Selector Valve Assembly (continued)

Ref.	Part Number	Qty.	Description
1	99-3077	1	Valve-HYD, Auxiliary
2	108-4716	1	HYD Tube ASM
2:1	237-22	1	O-Ring
3	340-98	1	Fitting-Elbow, 90 DEG
3:1	237-79	1	O-Ring
3:2	237-30	1	O-Ring
4	98-4695	2	Spacer
5	100-2085	2	Spacer
6	86-5480	1	Nipple-Test
7	354-79	1	Cap-Dust
8	108-9709-03	1	Lever-Control
9	340-4	4	Fitting-Straight
9:1	237-30	1	O-Ring
9:2	237-79	1	O-Ring
10	98-0152	1	Knob-Tapered
11	340-153	1	Fitting-Elbow, 90 DEG
11:1	237-79	1	O-Ring
11:2	237-151	1	O-Ring
12	3253-4	1	Washer-Lock
13	33114-035	1	Screw-HH
14	95-3209	1	Fitting-Thread, Straight
14:1	237-79	2	O-Ring
15	99-3072	1	Valve-Selector, HYD
16	98-4747	1	Hose-HYD
17	322-12	4	Screw-HH
18	100-8817	2	Hose-HYD
19	105-7879	1	Tube-HYD
20	340-105	2	Fitting-Elbow, 90 DEG
20:1	237-80	1	O-Ring
20:2	237-30	1	O-Ring
22	104-8300	4	Nut-HF, NI
23	3290-379	8	Tie-Cable
24	108-9715	2	Sleeve-Thermal
25	99-3008	1	Hose-HYD

Auxiliary Hydraulic Valve Assembly No. 99-3077

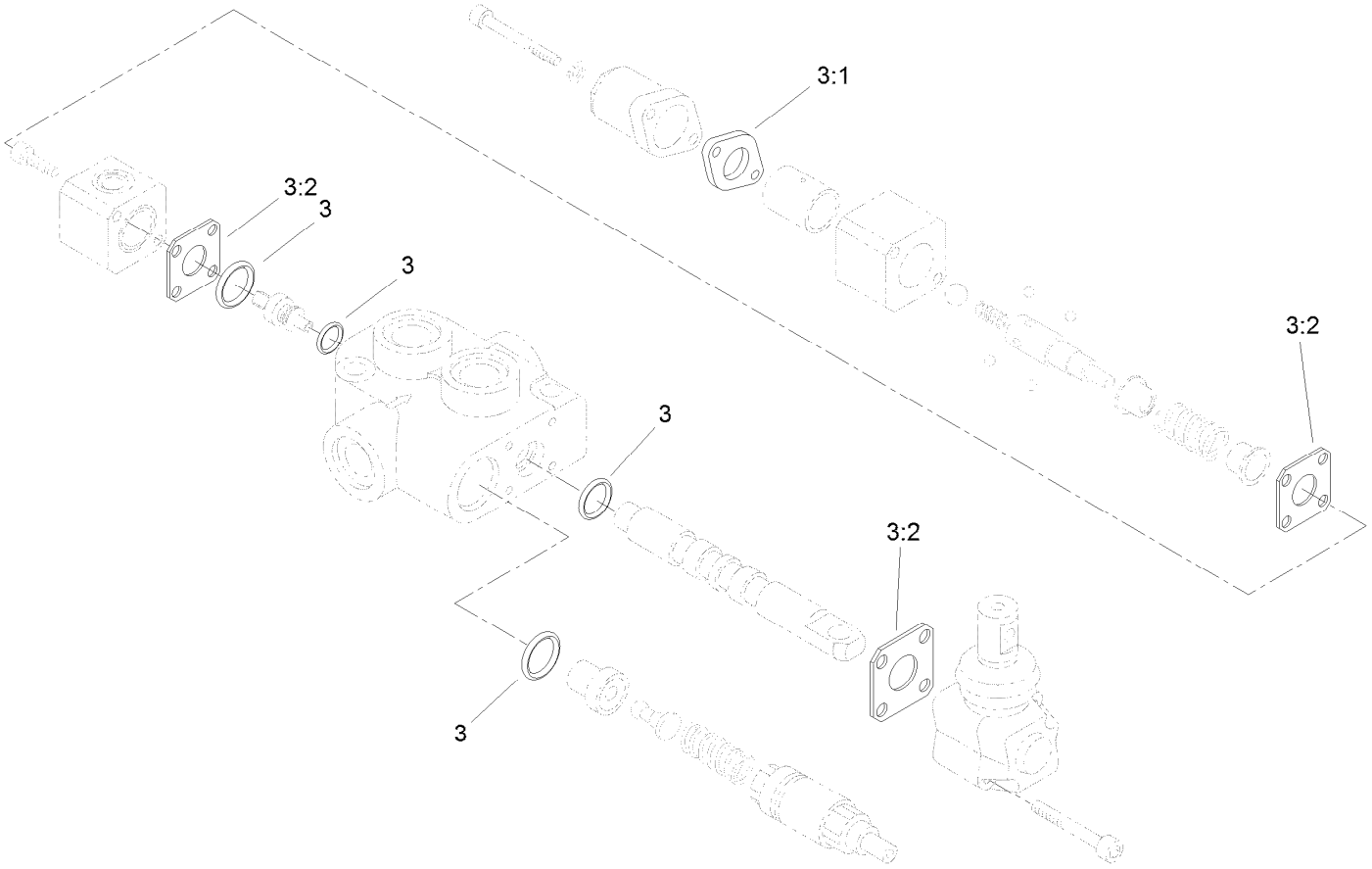

Auxiliary Hydraulic Valve Assembly No. 99-3077 (continued)

Ref.	*Part Number*	*Qty.*	*Description*
3	99-4390	1	Seal Kit
3:1	99-3074	4	Gasket
3:2	99-3075	8	Gasket

Hydraulic Selector Valve Assembly No. 99-3072

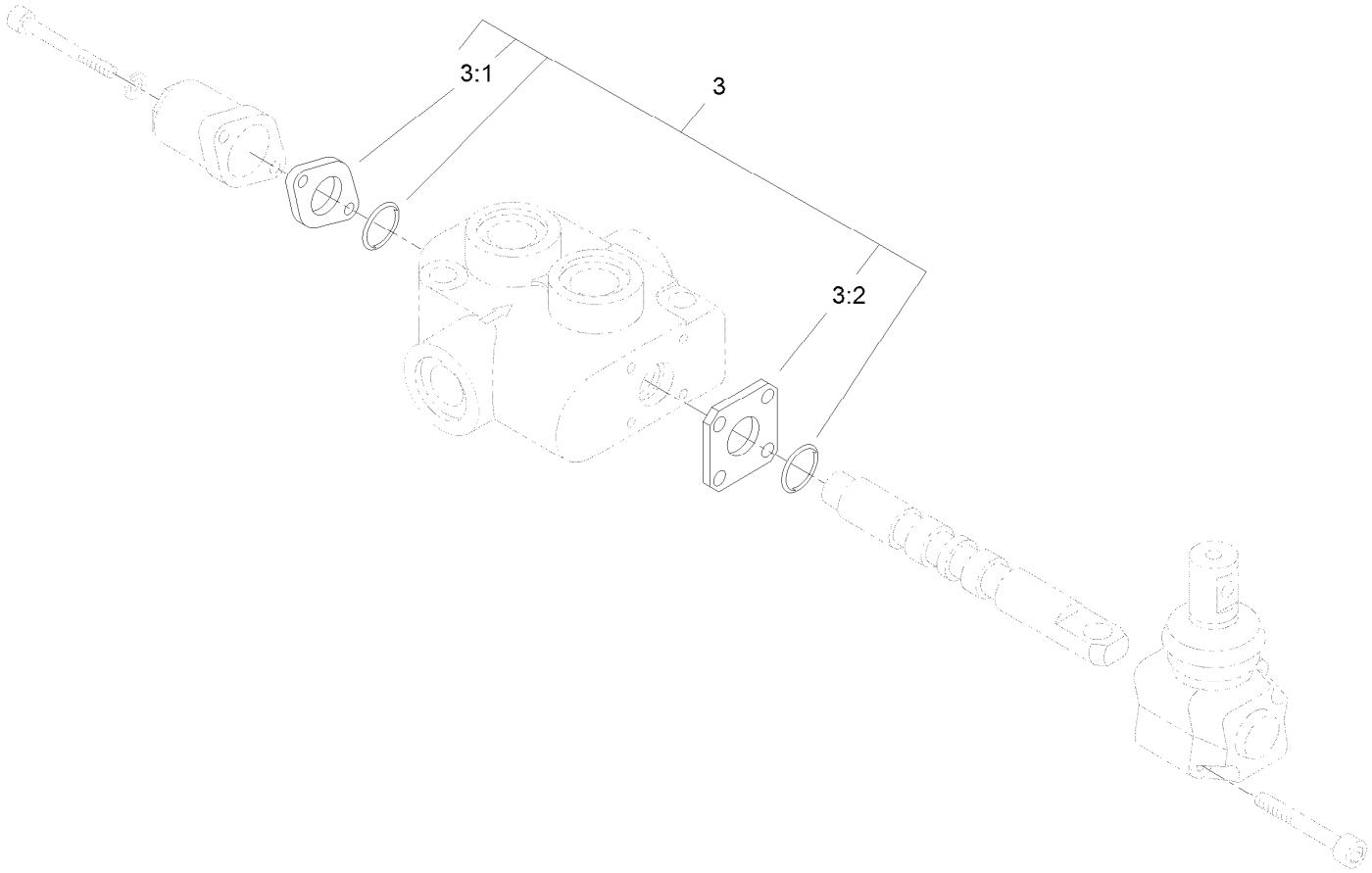

Hydraulic Selector Valve Assembly No. 99-3072 (continued)

Ref.	*Part Number*	*Qty.*	*Description*
3	99-4390	1	Seal Kit
3:1	99-3074	4	Gasket
3:2	99-3075	8	Gasket

Four Spool Valve and Lever Assembly

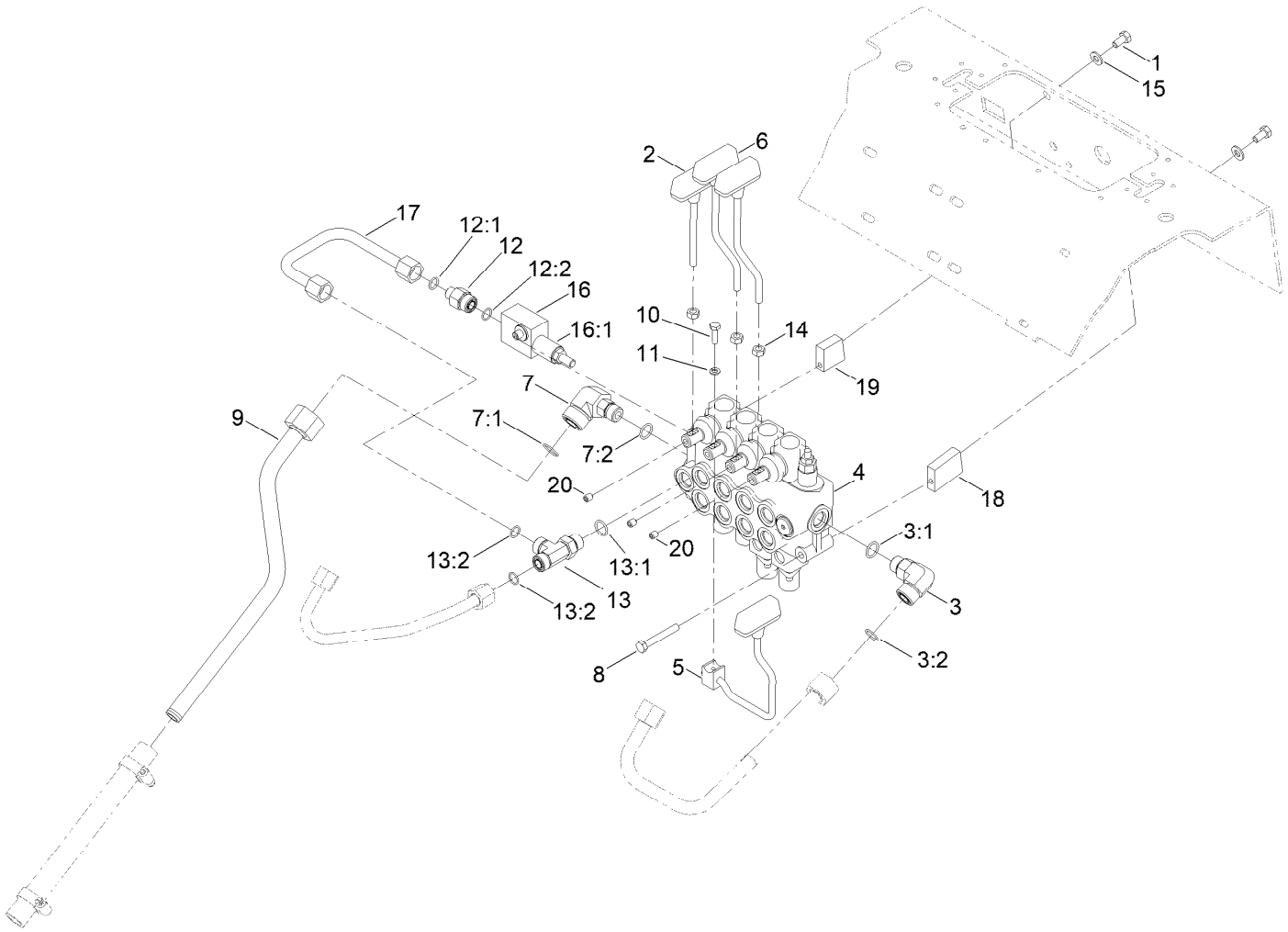

Four Spool Valve and Lever Assembly (continued)

Ref.	Part Number	Qty.	Description
1	322-2	3	Screw-HH
2	105-7881	1	Lever-Cylinder
3	340-153	1	Fitting-Elbow, 90 DEG
3:1	237-79	1	O-Ring
3:2	237-151	1	O-Ring
4	105-8377	1	HYD Four Spool Valve ASM
5	106-8165	1	Lever-Control
6	104-5733	2	Lever-Drive
7	92-5696	1	Fitting-Elbow, 90 DEG
7:1	237-58	1	O-Ring
7:2	237-79	1	O-Ring
8	322-11	3	Screw-HH
9	106-8177	1	Tube-Tank, HYD
10	321-5	1	Screw-HH
11	3253-3	1	Washer-Lock
12	340-5	1	Fitting-Straight
12:1	237-42	1	O-Ring
12:2	237-30	1	O-Ring
13	340-109	1	Fitting-Tee
13:1	237-79	1	O-Ring
13:2	237-30	2	O-Ring
14	33014-00	3	Nut-Hex
15	33094-00	3	Washer-Plain
16	105-7882	1	Relief Valve ASM
16:1	105-8358	1	Cartridge-Valve, Relief
16:2	105-8357	1	Seal Kit [I]
17	108-4717	1	Tube-HYD
18	108-4728	2	Spacer V
19	105-7870	1	Spacer-Upper V
20	105-4068	3	Screw-Set,Cphs

[I] Not illustrated

Four Spool Hydraulic Valve Assembly No. 105-8377

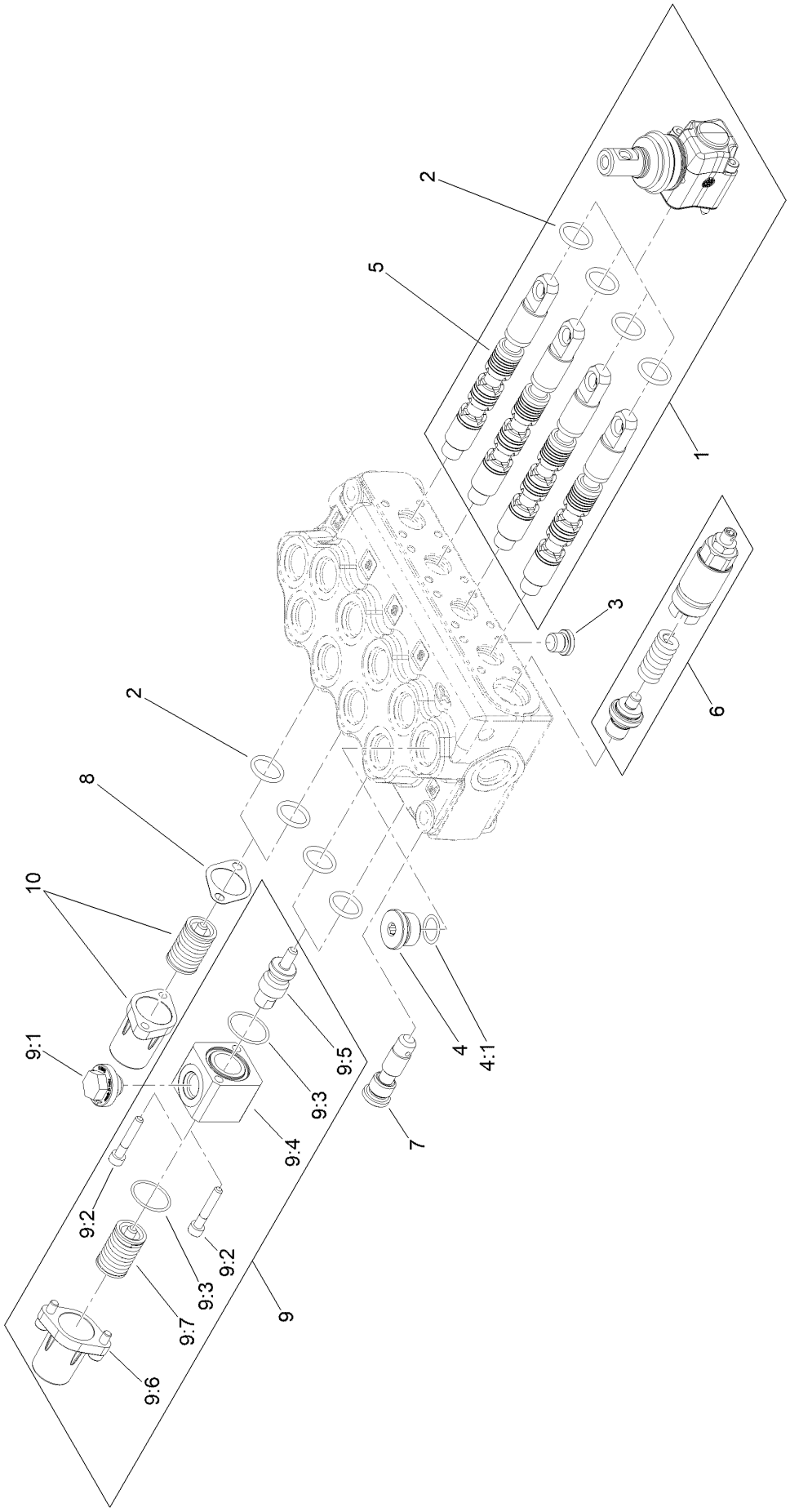

Four Spool Hydraulic Valve Assembly No. 105-8377 (continued)

Ref.	Part Number	Qty.	Description
1	139-8891	4	Lsg/S5 Lever Kit With Screws
2	139-8886	8	O-Ring Seal, 70 Sh
3	139-8884	1	SAE 4 Plug
4	353-988	1	Plug-Hex
4:1	237-79	1	O-Ring
5	105-8441	4	Spool-Valve
6	139-8890	1	Vmd5 (Jn) Inlet Part
7	139-8880	1	Kit-Valve Body
8	99-3074	2	Gasket
9	139-8887	2	S5 Command Kit
9:1		1	Plug [I]
9:2		2	Screw [I]
9:3		2	Oring [I]
9:4		1	Block [I]
9:5		1	Pin [I]
9:6		1	End Cap [I]
9:7		1	Spring [I]
10	161-1080	2	S5 End Cap Kit

[I] Not serviced separately

Hydraulic Motor Assembly

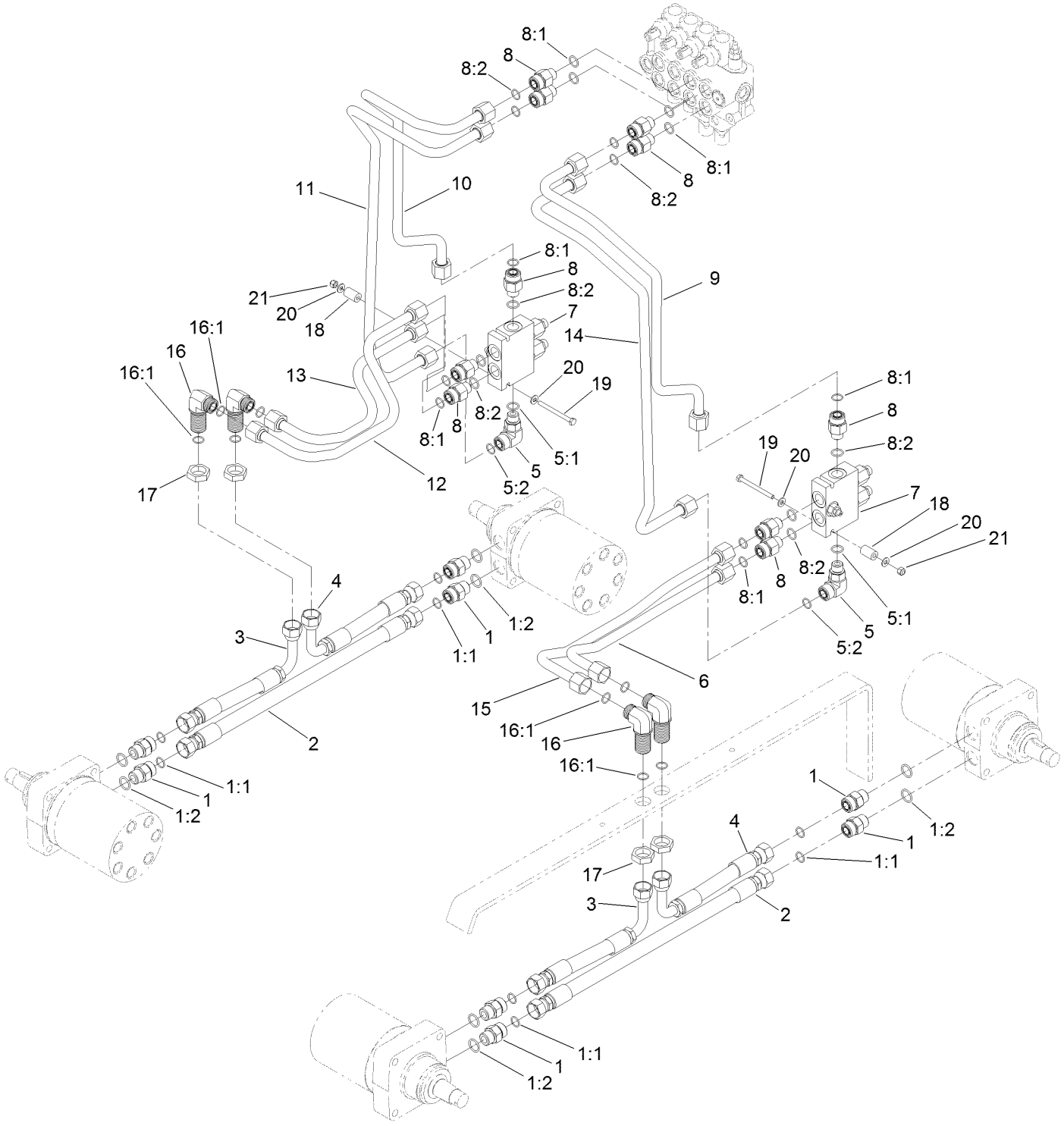

Hydraulic Motor Assembly (continued)

Ref.	Part Number	Qty.	Description
1	340-7	8	Fitting-Straight
1:1	237-65	1	O-Ring
1:2	237-80	1	O-Ring
2	99-3012	2	Hose-HYD
3	99-3010	2	Hose-HYD
4	99-3011	2	Hose-HYD
5	340-153	2	Fitting-Elbow, 90 DEG
5:1	237-79	1	O-Ring
5:2	237-151	1	O-Ring
6	99-3022	1	Tube-HYD
7	99-3040	2	HYD Counterbalance Valve ASM
8	340-155	10	Fitting-Straight
8:1	237-79	1	O-Ring
8:2	237-151	1	O-Ring
9	108-9729	1	Tube-HYD
10	108-9727	1	Tube-HYD
11	108-9726	1	Tube-HYD
12	99-3025	1	Tube-HYD
13	99-3028	1	Tube-HYD
14	108-9725	1	Tube-HYD
15	99-3026	1	Tube-HYD
16	340-72	4	Fitting-Bulkhead, 90 DEG
16:1	237-65	2	O-Ring
17	340-74	4	Nut-Lock, Bulkhead
18	99-3057	2	Spacer-Valve
19	321-23	2	Screw-HH
20	3256-22	4	Washer-Flat
21	3296-42	2	Nut-Lock, NI

Counterbalance Valve Assembly No. 99-3040

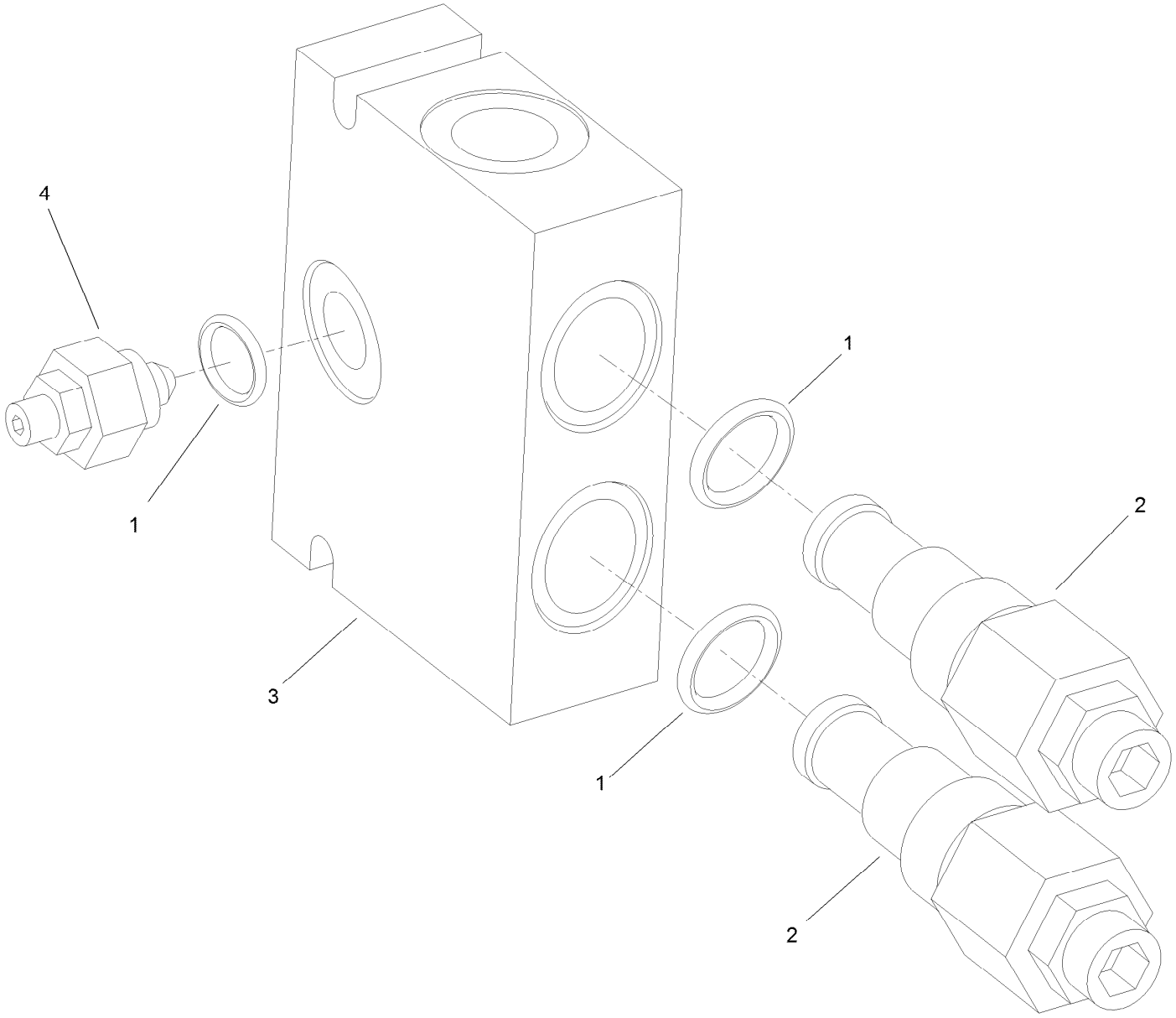

Counterbalance Valve Assembly No. 99-3040 (continued)

Ref.	Part Number	Qty.	Description
1	105-4099	1	Seal Kit
2	99-3271	2	Valve-Cartridge
3	100-8864	1	Manifold ASM
4	100-8865	1	Needle Valve ASM

Hydraulic Cylinder Assembly

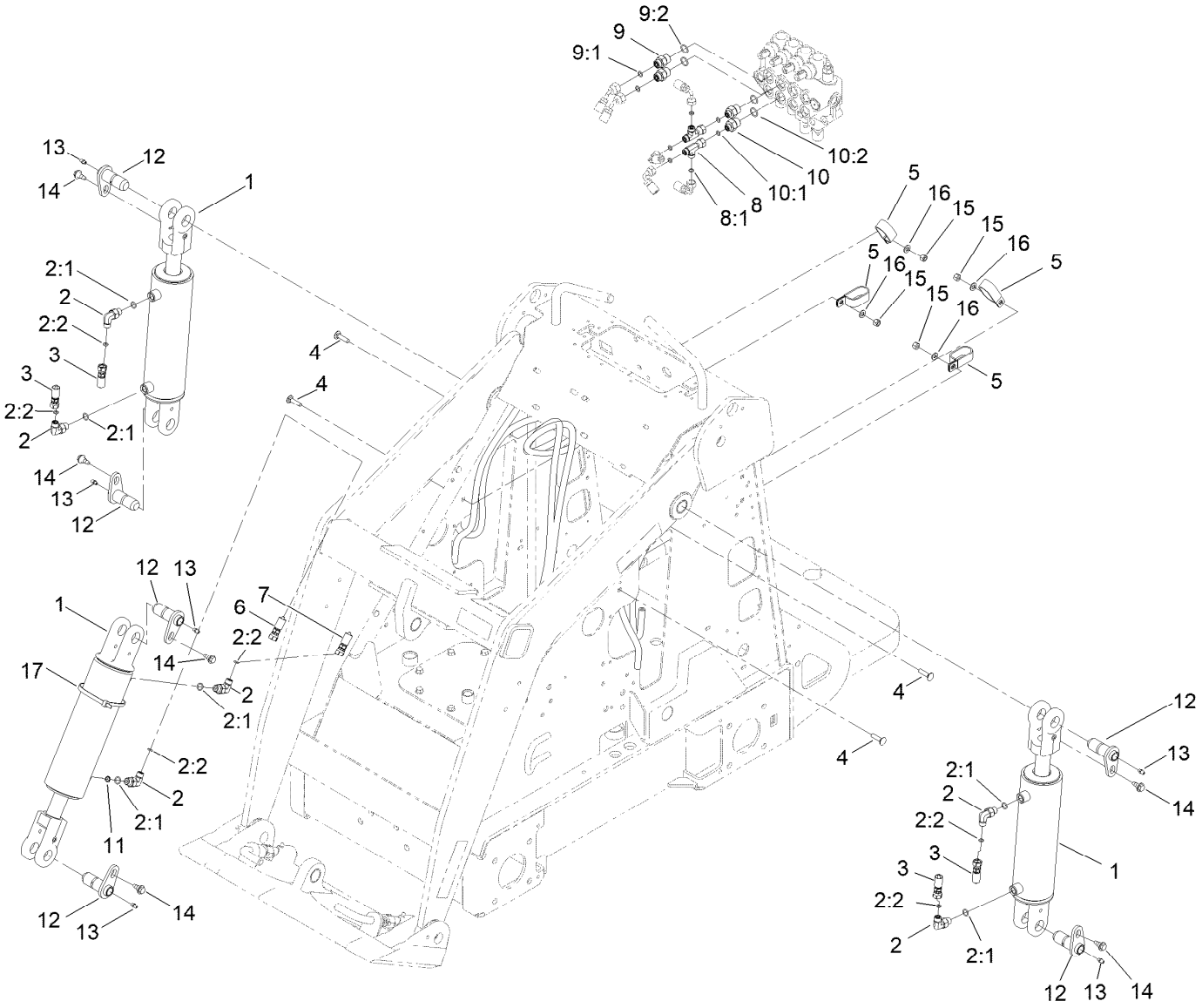

Hydraulic Cylinder Assembly (continued)

Ref.	Part Number	Qty.	Description
1	139-7706	3	Cylinder-Hydraulic
2	340-82	6	Fitting-Elbow, 90 DEG
2:1	237-42	1	O-Ring
2:2	237-21	1	O-Ring
3	98-4725	4	Hose-HYD
4	3230-3	4	Screw-CARR
5	2412-137	4	Clamp-R, Double
6	98-4726	1	Hose-HYD
7	98-4727	1	Hose-HYD
8	340-151	2	Fitting-Tee
8:1	237-21	2	O-Ring
9	340-3	2	Fitting-Straight
9:1	237-22	1	O-Ring
9:2	237-79	1	O-Ring
10	340-133	2	Fitting-STR
10:1	237-79	1	O-Ring
10:2	237-21	1	O-Ring
11	108-4714	1	Orifice-Port Insert, One Way
12	112-2609	6	Pin-Pivot
13	302-5	6	Fitting-Grease
14	99-5105	6	Screw-Shoulder
15	3296-29	4	Nut-Lock, NI
16	3256-23	4	Washer-Plain
17	3334-945	1	Tie-Cable

Hydraulic Cylinder Assembly No. 139-7706

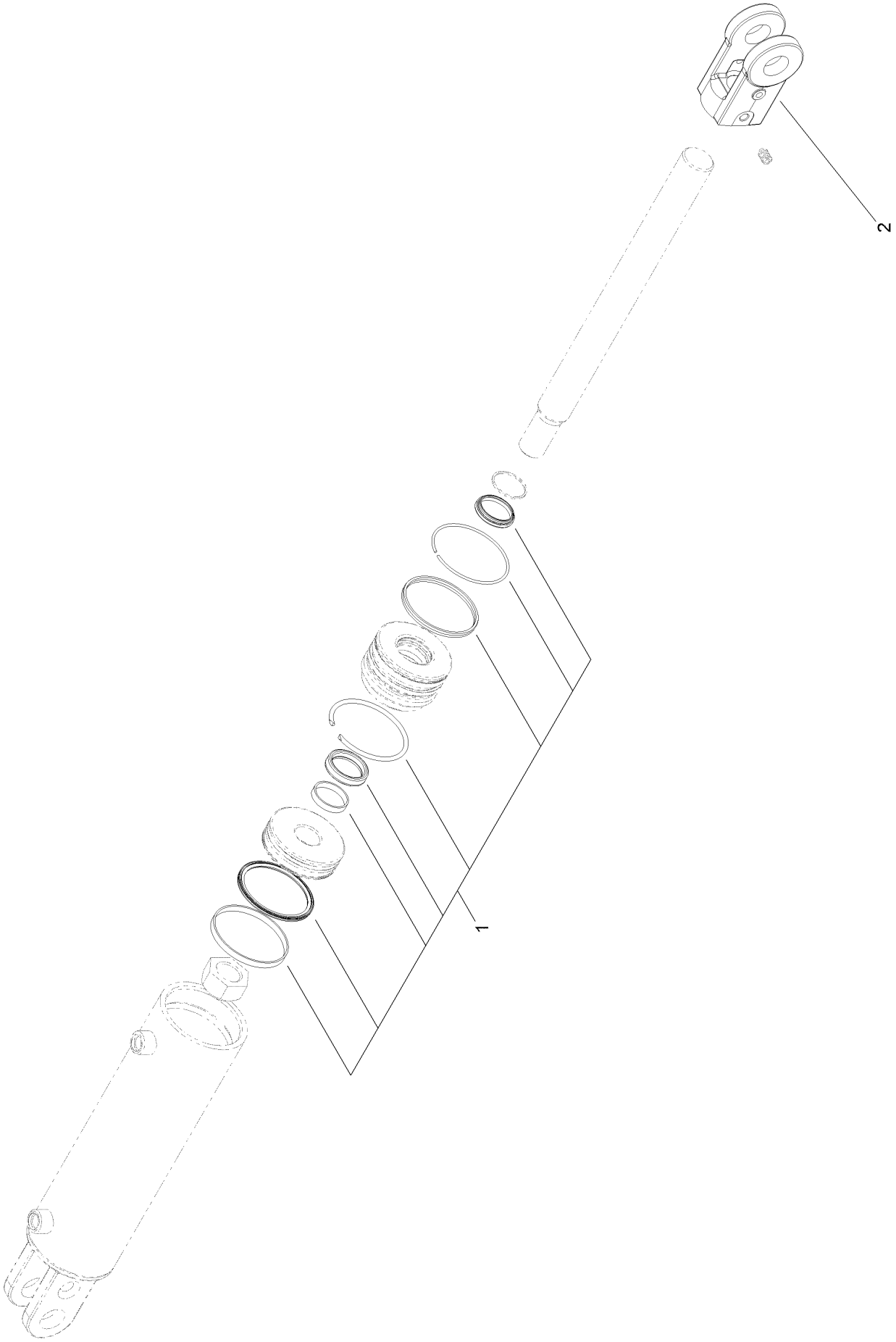

Hydraulic Cylinder Assembly No. 139-7706 (continued)

Ref.	*Part Number*	*Qty.*	*Description*
1	139-7713	1	Seal Kit
2	163-8918	1	Rod-Clevis

Attachments and Accessories

For 22318 — 323 Compact Tool Carrier

Product Name	Model/Part
Tire Chain Kit	100-4140
Helmet-Face Shield	100-4143
Narrow Tire ASM	104-0572
Tube-Tire (18 x 8.50-10)	105-4070
Rubber Foot Mat	105-5805
Tube-Tire (18 X 8.50-8)	106396
Spare Tire Kit Assembly	144-0105
Light Kit ASM	144-7101
Adjustable Forks	22341
CE Conversion Kit	22366
4 Cubic Foot Standard Bucket	22409
Loose Materials Bucket	22410
48in Hydraulic Blade	22414
Bore Drive Head	22420
Rod and Reamer	22421
Multi-Purpose Tool	22423
Direct Drive Power Box Rake	22426
Stump Grinder	22429
Tree Forks	22438
Cement Bowl	22442
40in Tiller	22445
High-Torque Trencher Head	22473
High-Speed Trencher Head	22474
Narrow Bucket	22520
Grapple Rake	22577
Auger Head	22805
Universal Swivel Auger Head	22806
18in Auger Bit	22814
24in Auger Bit	22815
12in Auger Bit Extension	22818
24in Auger Bit Extension	22819
6in Full-Flight Auger Bit	22820
9in Full-Flight Auger Bit	22821
12in Full-Flight Auger Bit	22822
15in Full-Flight Auger Bit	22823
Vibratory Plow	22911
Concrete Breaker	23135
Backhoe	23163
Leveler	23165
Tube	232-37
LH Wheel And Tire ASM	98-2747
Wheel and Tire ASM	98-4709
Spark Arrestor	98-9099
RH Wheel And Tire ASM	99-1447
Hydraulic Relief Valve Kit	99-4360

Notes:



Count on it.