Form No. 3326-990 Rev B

TORO®

5.5 HP. Vacuum/Blower

Model No. 62925—220000001 and Up

Operator’s Manual

CE

International English (GB)

This spark ignition system complies with Canadian ICES-002.

Ce système d'allumage par étincelle de véhicule est conforme à la norme NMB-002 du Canada.

The enclosed Engine Owner's Manual is supplied for information regarding The U.S. Environmental Protection Agency (EPA) and the California Emission Control Regulation of emission systems, maintenance and warranty.

Keep this engine Owner's Manual with your unit. Should this engine Owner's Manual become damaged or illegible, replace immediately. Replacements may be ordered through the engine manufacturer.

Contents

	Page
Introduction	2
Safety	3
General Safety	3
Sound Pressure Level	4
Sound Power Level	4
Vibration Level	4
Safety and Instruction Decals	5
Assembly	6
Loose Parts	6
Installing the Upper Handle and Controls	6
Installing the Discharge Chute and Bag	8
Installing the Snout	8
Before Operating	8
Adding Fuel	9
Checking the Oil Level	9
Operation	10
Starting the Engine	10
Stopping the Engine	10
Adjusting the Intake Housing Height	11
Driving the Machine Forward	11
Emptying the Debris Bag	11
Using the Bag Vent	12
Converting from Vacuum to Blower	12
Maintenance	14
Recommended Maintenance Schedule	14
Servicing the Air Cleaner	14
Changing Engine Oil	15
Lubricating the Machine	16
Emptying the Fuel Tank	16
Servicing the Spark Plug	16
Servicing the Traction Drive	17
Storage	19

Introduction

Thank you for purchasing a Toro product.

All of us at Toro want you to be completely satisfied with your new product, so feel free to contact your local Authorized Service Dealer for help with service, genuine replacement parts, or other information you may require.

Whenever you need service, genuine Toro parts, or additional information, contact an Authorized Service Dealer or Toro Customer Service and have the model and serial numbers of your product ready. Figure 1 illustrates the location of the model and serial numbers on the product.

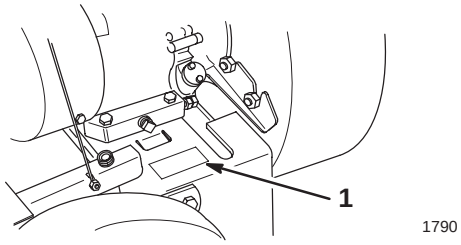

Figure 1

1. Location of the model and serial numbers

For your convenience, write the product model and serial numbers in the space below.

Model No: _____

Serial No. _____

Read this manual carefully to learn how to operate and maintain your product correctly. Reading this manual will help you and others avoid personal injury and damage to the product. Although we design, produce and market safe, state-of-the-art products, you are responsible for using the product properly and safely. You are also responsible for training persons, who you allow to use the product, about safe operation.

The warning system in this manual identifies potential hazards and has special safety messages that help you and others avoid personal injury, even death. ***Danger***, ***Warning***, and ***Caution*** are signal words used to identify the level of hazard. However, regardless of the hazard, be extremely careful.

Danger signals an extreme hazard that will cause serious injury or death if the recommended precautions are not followed.

Warning signals a hazard that may cause serious injury or death if the recommended precautions are not followed.

© 2003 by The Toro Company
8111 Lyndale Avenue South
Bloomington, MN 55420-1196

All Rights Reserved

Printed in the USA

Caution signals a hazard that may cause minor or moderate injury if the recommended precautions are not followed.

Two other words are also used to highlight information. *Important* calls attention to special mechanical information, and *Note* emphasizes general information worthy of special attention.

Safety

To ensure maximum safety and best performance, and to gain knowledge of the product, it is essential that you and any other operator of the machine read and understand the contents of this manual before the engine is ever started.

⚠ This is the safety alert symbol. It is used to alert you to potential personal injury hazards. Obey all safety messages that follow this symbol to avoid possible injury or death.

Improperly using or maintaining this machine could result in injury or death. To reduce this potential, comply with the following safety instructions.

⚠ Warning ⚠

Engine exhaust contains carbon monoxide, an odorless, deadly poison that can kill you.

Do not run the engine indoors or in an enclosed area.

General Safety

Training

- Read this operator's manual carefully. Be thoroughly familiar with the controls and the proper use of the machine before starting it.
- Never allow children to operate the machine. Local regulations may restrict the age of the operator.
- Never allow adults unfamiliar with these instructions to operate the machine.
- Never use the machine while people (especially children) or pets are nearby. Stop the machine if anyone enters the area.
- Tragic accidents can occur if the operator is not alert to the presence of children. Children are often attracted to the machine. Never assume that children will remain where you last saw them.
- Keep children out of the work area and under the watchful care of a responsible adult.
- Be alert and turn the machine off if children enter the area.
- Use extra care when approaching blind corners, shrubs, trees, or other objects that may obscure vision.
- Keep in mind that the operator or user is responsible for accidents or hazards occurring to other people or their property.
- See the manufacturer's instructions for proper operation and installation of accessories. Use only the accessories that are approved by the manufacturer.

Preparation

- While operating, always wear substantial footwear and long trousers.
- Do not operate the machine when barefoot or wearing open sandals.
- Always wear safety goggles or safety glasses with side shields when operating the machine.
- Warning: Gasoline is highly flammable. Take the following precautions:
  - Store fuel in containers specifically designed for this purpose.
  - Refuel outdoors only and do not smoke while refuelling.
  - Add fuel before starting the engine. Never remove the cap of the fuel tank or add gasoline while the engine is running or when the engine is hot.
  - If gasoline is spilled, do not attempt to start the engine. Move the machine away from the area of spillage to avoid creating any source of ignition until the gasoline vapors have dissipated.
  - Replace all fuel tank and container caps securely.
  - If you must drain the fuel from the fuel tank, do it outdoors.
- Replace faulty mufflers.
- Before using, always visually inspect the machine for wear or damage. Replace worn or damaged parts.

Operation

- Do not operate the engine in a confined space where dangerous carbon monoxide fumes can collect.
- Operate only in daylight or in good artificial light.
- Always be sure of your footing on slopes.
- Walk; never run.
- Keep a firm hold on the handle.

- Exercise caution when changing the direction on slopes.
- Do not operate on steep slopes.
- Never operate the machine with damaged or missing guards or shields, or without safety devices (such as blower tube or debris bag) in place.
- Disengage the traction drive lever before starting the engine.
- Do not put your hands or feet near or under the snout. Keep clear of the the snout and blower tube (when installed) at all times.
- Stop the engine and disconnect the spark-plug wire:
  - before clearing blockages
  - before checking, cleaning, or working on the machine
  - before changing from vacuum to blower or blower to vacuum
- Stop the engine:
  - whenever you leave the machine
  - before refuelling
- Shut the engine off and wait until the impeller comes to a complete stop before removing the debris bag.
- Do not operate the machine while under the influence of alcohol or drugs.
- If the machine should start to vibrate abnormally, stop the engine and check immediately for the cause. Vibration is generally a warning of trouble.
- Do not operate near drop-offs, ditches, or embankments. You could lose your footing or balance.
- Do not operate on wet grass. Reduced footing could cause slipping.

Maintenance and Storage

- Keep all nuts, bolts, and screws tight to ensure that the machine is in safe working condition.
- Never store the machine with gasoline in the tank inside a building where fumes may reach an open flame or spark.
- Allow the engine to cool before storing the machine in any enclosure.
- To reduce the fire hazard, keep the engine, muffler, and gasoline storage area free of grass, leaves, or excessive grease.
- Check the debris bag frequently for wear or deterioration.
- Replace worn or damaged parts.
- Use extra care when handling gasoline; gasoline vapors are explosive.
- Keep the machine free of grass, leaves, or other debris buildup. Clean up any oil or fuel that spills.
- Stop and inspect the machine if you strike an object. Repair the machine, if necessary, before starting the engine.
- Debris bag components are subject to wear, damage, and deterioration, which could expose moving parts or allow objects to be thrown. Frequently check the components and replace them with the manufacturer's recommended parts when necessary.
- Do not change the speed settings on the engine.
- If you must drain the fuel from the fuel tank, do it outdoors.
- To ensure the best performance and safety, purchase only genuine Toro replacement parts and accessories.
- Maintain or replace safety and instruction decals when necessary.

Sound Pressure Level

This unit has an equivalent continuous A-weighted sound pressure at the operator ear of 97 dB(A), based on measurements of identical machines per procedures outlined in Directive 98/37/EC and amendments.

Sound Power Level

This unit has a sound power level of 107 dB(A), based on measurements of identical machines per procedures outlined in Directive 2000/14/EC and amendments.

Vibration Level

This unit has a maximum hand-arm vibration level of 6.4 m/s^2, based on measurements of identical machines per Directive 98/37/EC and amendments.

Safety and Instruction Decals

Safety decals and instructions are easily visible to the operator and are located near any area of potential danger. Replace any decal that is damaged or lost.



105-4062

1. Warning—read the *Operator's Manual.*
2. Thrown object hazard—stay a safe distance from the machine.
3. Warning—stop the engine, remove the wire from the spark plug, and read the instructions before servicing or performing maintenance.
4. Cutting/dismemberment hazard, impeller—stay away from moving parts.



93-4137

1. Low
2. Height of vacuum snout
3. High

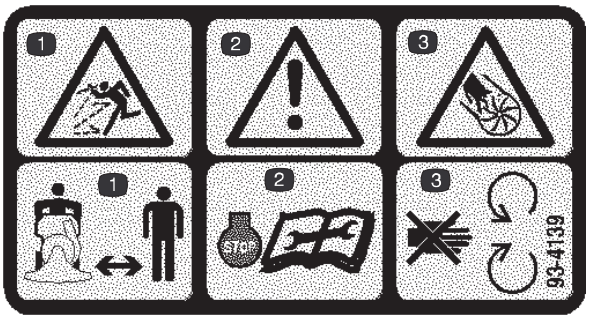

93-4139

1. Thrown object hazard—stay a safe distance from the machine.
2. Warning—stop the engine and read the instructions before servicing or performing maintenance.
3. Cutting/dismemberment hazard, impeller—stay away from moving parts.



93-4141

1. To engage the traction drive, move the traction drive lever to the handle.

Assembly

Loose Parts

Note: Use the chart below to verify all parts have been shipped with unit.

Description	Qty.	Use
Upper handle assembly	1	Install upper handle
Bag support	1	
Hex head bolt, 5/16 x 1-1/2 in.	4	
Locknut, 5/16 in.	4	
Hex head bolt, 1/4 x 1-13/4 in.	1	Install rope guide
Locknut, 1/4 in.	1	
Rope guide	1	
Hex head bolt, 1/4 x 3/4 in.	1	Install traction control wire
Locknut, 1/4 in.	1	
Height control rod	1	Install height control rod
Hair pin cotter	2	
Hex head bolt, 1/4 x 3/4 in.	1	Install discharge chute
Lock washer, 1/4 in.	1	
Debris bag	1	
Blower tube	1	Install blower attachment
Blower intake screen	1	

Note: The machine is partially assembled as a lawn vacuum. The blower intake and blower exhaust are not used with the vacuum. To set the machine up as a blower, refer to Converting from Vacuum to Blower, page 12.

Installing the Upper Handle and Controls

1. Attach the upper handle to the lower handle with four capscrews and locknuts (Fig. 2).

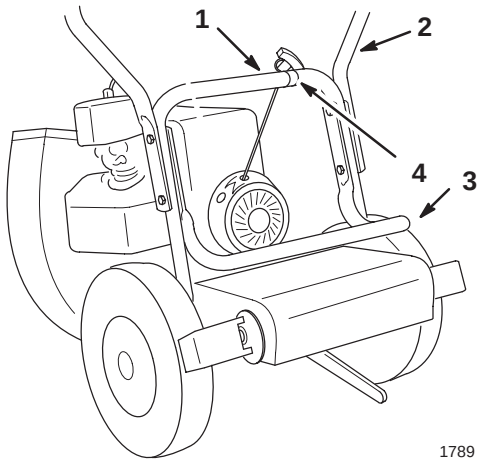

Figure 2

1. Lower handle
2. Upper handle
3. Bag support
4. Rope guide

2. Secure the bag support to the inside of the lower handle while mounting the handle (Fig. 2).

3. Secure starter rope guide to the lower handle with a bolt and locknut (Fig. 3).

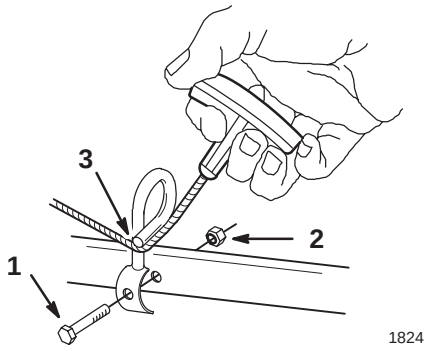

Figure 3

1. Bolt
2. Locknut
3. Pull rope through rope guide

4. Pull the starter rope through the guide (Fig. 3).

5. Hook the lower end (ball end) of the traction control wire in the keyhole slot in the arm on the traction drive guard (Fig. 4).

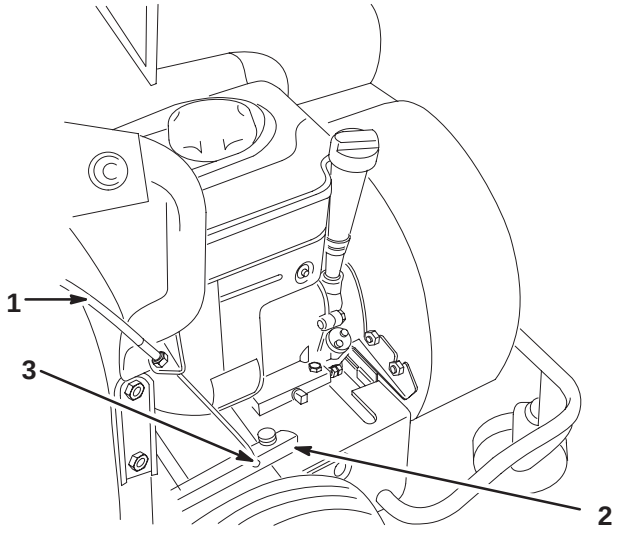

Figure 4

1. Traction control wire
2. Traction drive guard
3. Bolt and nut

6. Secure the ball in the keyhole slot with a bolt and nut (Fig. 4).

Note: Make sure ball end of cable is not between screw head and drive guard.

7. Secure the lower end of the height control rod to the bracket on the front wheel support with a hairpin cotter (Fig. 5).

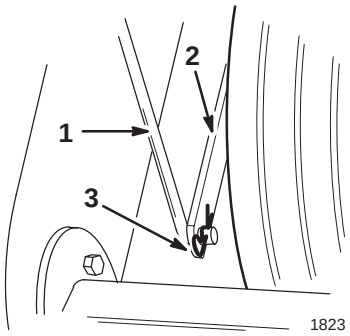

Figure 5

1. Height control rod
2. Front wheel support bracket
3. Hairpin cotter

8. Secure the upper end of the height control rod to the height adjustment handle with a hairpin cotter (Fig. 6).

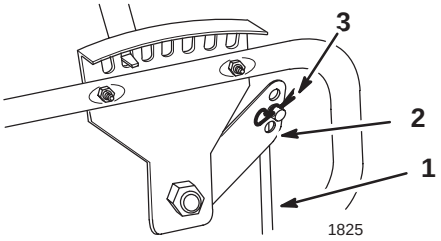

Figure 6

1. Height control rod
2. Height adjustment handle
3. Hairpin cotter

Installing the Discharge Chute and Bag

1. Install the discharge chute and secure it with a bolt (1/4 in.) and lock washer (Fig. 7).

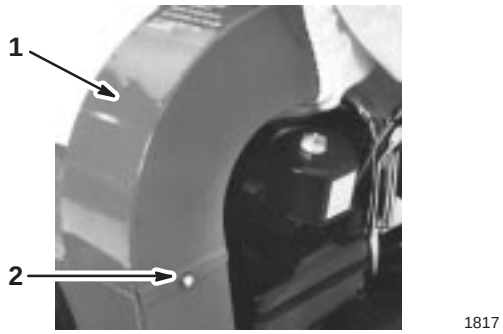

Figure 7

1. Chute
2. Bolt (1/4 in.) and lock washer

2. Position the bag onto the handle, hooking the grommets over the pins and the bag strap over the handle (Fig. 8).

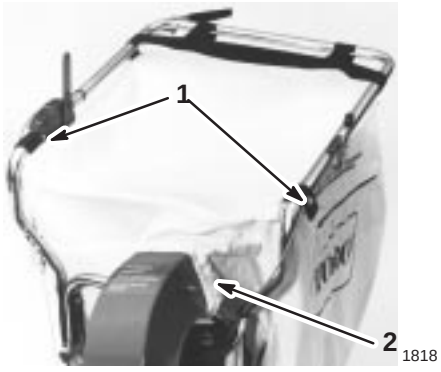

Figure 8

1. Grommets
2. Elasticized neck

3. Slip the elasticized neck of the bag over the flanges on the chute (Fig. 8).

Installing the Snout

1. Mount the lower edge of the snout flange into the mounting bracket (Fig. 9).

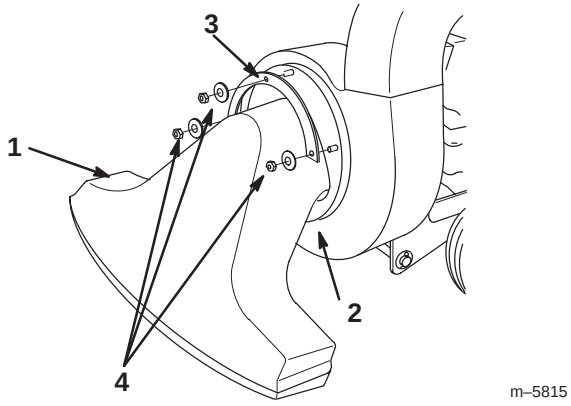

Figure 9

1. Vacuum snout
2. Lower edge of flange
3. Retainer flange
4. Washer and locknut

2. Position the retainer flange over the 3 bolt ends protruding through the snout (Fig. 9).

3. Secure the snout and flange to the blower with 3 washers and locknuts (Fig. 9).

Before Operating

Before operating, check the fuel and oil level, and remove debris from the machine. Also, ensure that the area is clear of people and debris.

Adding Fuel

Danger

In certain conditions, gasoline is extremely flammable and highly explosive. A fire or explosion from gasoline can burn you and others and can damage property.

- **Fill the fuel tank outdoors, in an open area, when the engine is cold. Wipe up any gasoline that spills.**
- **Do not fill the fuel tank completely full. Add gasoline to the fuel tank until the level is 1/4 to 1/2 in. (6 to 13 mm) below the bottom of the filler neck. This empty space in the tank allows gasoline to expand.**
- **Never smoke when handling gasoline, and stay away from an open flame or where gasoline fumes may be ignited by a spark.**
- **Store gasoline in an approved container and keep it out of the reach of children. Never buy more than a 30-day supply of gasoline.**
- **Always place gasoline containers on the ground away from your vehicle before filling.**
- **Do not fill gasoline containers inside a vehicle or on a truck or trailer bed because interior carpets or plastic truck bed liners may insulate the container and slow the loss of any static charge.**
- **When practical, remove gas-powered equipment from the truck or trailer and refuel the equipment with its wheels on the ground.**
- **If this is not possible, then refuel such equipment on a truck or trailer from a portable container, rather than from a gasoline dispenser nozzle.**
- **If a gasoline dispenser nozzle must be used, keep the nozzle in contact with the rim of the fuel tank or container opening at all times until fueling is complete.**

Use unleaded gasoline (87 pump octane minimum). Leaded, regular gasoline may be used if unleaded is not available.

Important Do not use methanol, gasoline containing methanol, or gasohol containing more than 10% ethanol because the fuel system could be damaged. Do not mix oil with gasoline.

Using Stabilizer/Conditioner

Use a fuel stabilizer/conditioner in the traction unit to provide the following benefits:

- Keeps gasoline fresh during storage of 90 days or less. For longer storage it is recommended that the fuel tank be drained.
- Cleans the engine while it runs
- Eliminates gum-like varnish buildup in the fuel system, which causes hard starting

Important Do not use fuel additives containing methanol or ethanol.

Add the correct amount of gas stabilizer/conditioner to the gas.

Note: A fuel stabilizer/conditioner is most effective when mixed with fresh gasoline. To minimize the chance of varnish deposits in the fuel system, use fuel stabilizer at all times.

Filling the Fuel Tank

1. Park the machine on a level surface and stop the engine.
2. Allow the engine to cool.
3. Clean around the fuel tank cap and remove it.
4. Add unleaded gasoline to the fuel tank, until the level is 1 in. (26 mm) below the bottom of the filler neck.

Important This space in the tank allows gasoline to expand. Do not fill the fuel tank completely full.

5. Install the fuel tank cap securely.
6. Wipe up any gasoline that may have spilled.

Checking the Oil Level

Important The machine is shipped without oil in the crankcase. You must fill the crankcase with 20 oz. (0.6 l) of SAE 30 or 10W-30, high quality detergent oil with an API classification of SF, SG, or SH. **Severe engine damage will result if you attempt to run it without oil.**

1. Park the machine on a level surface and stop the engine.
2. Allow the engine to cool.
3. Clean around the oil dipstick (Fig. 10).

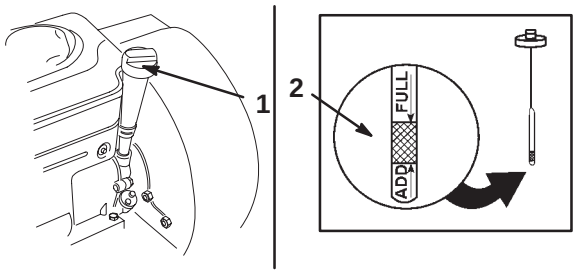

Figure 10

1. Oil dipstick
2. Metal end

4. Pull out the dipstick and wipe the metal end clean (Fig. 10).
5. Slide the dipstick fully into the dipstick tube and tighten it (Fig. 10).
6. Remove the dipstick and look at the metal end.
7. If the oil level is low, slowly pour only enough oil into the dipstick tube to raise the level to the F (full) mark.

Important Do not overfill the crankcase with oil because the engine may be damaged.

8. Replace and tighten the dipstick.

Operation

Warning

An uncovered discharge opening will allow objects to be thrown in operator's or bystander's direction which may cause serious injury.

Never operate the vacuum unless the bag is installed.

Warning

The traction belt drive pulley is rotating whenever the engine is running, even when the traction drive is disengaged. Contact with the pulley could cause severe injury.

Stay away from moving pulleys and other parts.

Starting the Engine

1. Move the choke lever (located on the left side of the engine) to the Choke position (Fig. 11).

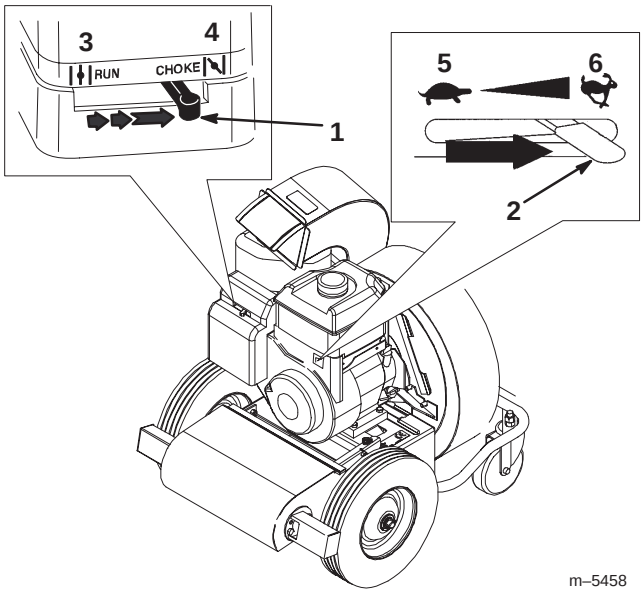

Figure 11

1. Choke lever
2. Throttle lever
3. Run position
4. Choke position
5. Slow position
6. Fast position

2. Move the throttle lever (located on the right side of the engine) to the Fast position (Fig. 11).
3. Pull the recoil starter handle out until positive engagement results, then pull it vigorously to start the engine. Allow the recoil rope to retract slowly.

Important Do not pull the recoil rope to its limit or let go of the starter handle when the rope is pulled out because the rope may break or the recoil assembly may be damaged.

4. As the engine warms up, slowly move the choke lever to the Off position (Fig. 11).

Stopping the Engine

Move the throttle lever all the way to the left in the Slow position (Fig. 11).

Warning

The impeller continues to rotate for a few seconds after the engine is stopped, and can cause serious personal injury.

Do not place any part of your body into the impeller area until you a certain that it has stopped.

Adjusting the Intake Housing Height

You can adjust the clearance between the air intake housing and the ground by moving height adjustment control to desired position. Set the height to low (L) for vacuuming hard surfaces such as sidewalks or driveways and to high (H) for thick lush turf with a heavy covering of leaves or clippings. The vacuum will work best when you keep the intake as close to the ground as is practical for the task you are performing.

1. Stop the engine.
2. Tip the machine slightly to the rear to take the weight off the castor wheels while adjusting.
3. Move the height adjustment control forward to lower the intake housing; move it to the rear to raise the housing (Fig 12).

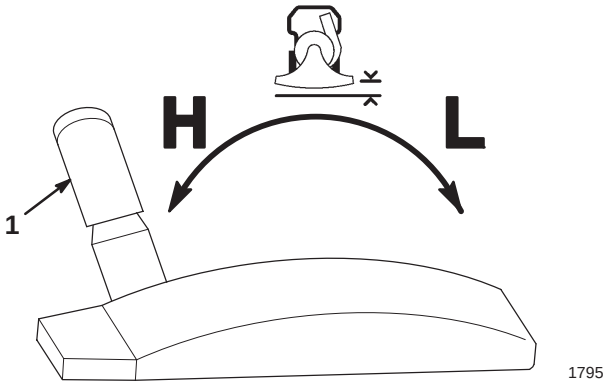

1795

Figure 12

1. Height adjustment control

4. Return the castor wheels to the ground

Driving the Machine Forward

Hold the traction control lever (Fig. 13) against the handle to move forward. Release the traction control lever to stop forward motion.

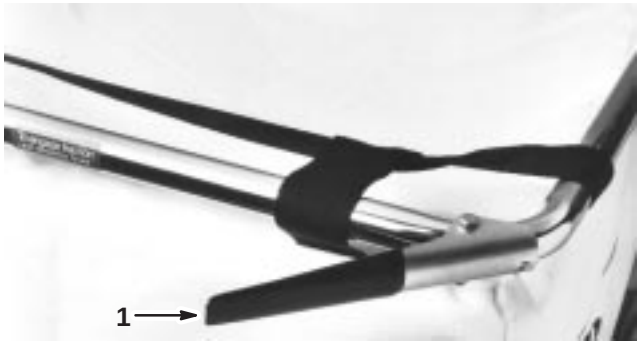

1819

Figure 13

1. Traction control lever (disengaged)

Emptying the Debris Bag

When the debris bag is full, empty it as follows:

Note: You do not need to remove the bag to empty it.

1. Drive to the location where you want to dump the debris.
2. Stop the engine.
3. Unzip the side of the bag and dump the contents (Fig. 14).

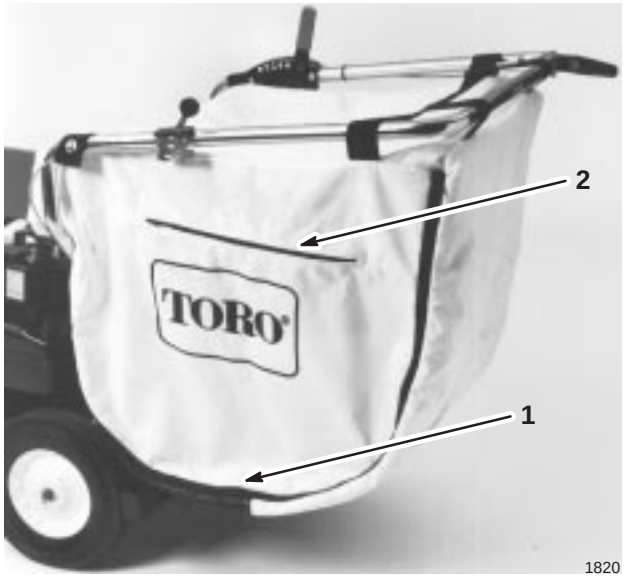

1820

Figure 14

1. Zipper for emptying
2. Bag vent

4. Close the zipper before starting the engine.

Warning

A worn debris bag could allow small stones and other similar debris to be thrown in the operator's or bystander's direction and result in serious personal injury or death to the operator or bystanders.

Check the debris bag frequently. If it is damaged, install a new Toro replacement bag.

Using the Bag Vent

The bag has a zippered vent (Fig. 14). When vacuuming an area which is basically free of dust, open the side vent should be open to allow free movement of air. When vacuuming a dusty area, close the vent.

Important Keep the inside of the bag clean to allow the air to circulate properly.

Converting from Vacuum to Blower

1. Stop the engine.

2. Remove the locknuts, washers, and retainer flange securing the snout and remove the snout (Fig. 9).

3. Remove the bag neck from blower discharge chute (Fig. 15). (You may remove the entire bag if desired.)

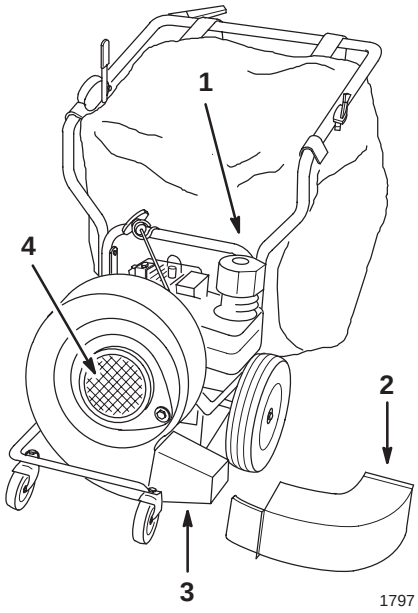

Figure 15

1. Bag neck
2. Blower discharge chute
3. Blower tube
4. Blower intake screen

4. Remove the retaining bolt and lock washer securing the blower discharge chute and remove the chute (Fig. 15).

5. Install the blower tube, securing it with the fasteners removed in step 4 (Fig. 15).

6. Remove bolt securing blower housing to engine bracket (Fig. 16).

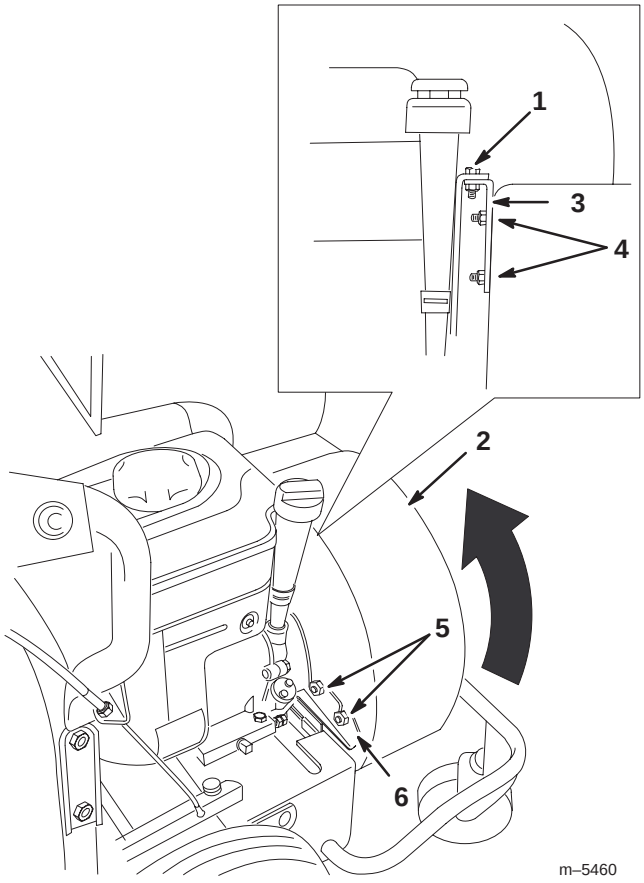

Figure 16

Housing in Vacuum Position

1. Bolt
2. Housing
3. Engine bracket
4. Locknuts and housing mounting studs
5. Locknuts
6. Stabilizer bracket

7. Remove the 2 locknuts securing housing to engine bracket and remove the bracket (Fig. 16).

8. Install the 2 locknuts on the housing mounting studs for safe keeping.

9. Remove the 2 locknuts securing housing to stabilizer bracket (Fig. 16).

10. Lift blower housing slightly and rotate it 120° clockwise (as you face the blower) (Fig. 15).

11. Reseat the housing, nesting the lower blower housing mounting bracket onto the front edge of the engine base (Fig. 17).

12. Install engine bracket on the housing mounting studs with 2 locknuts (Fig. 17).

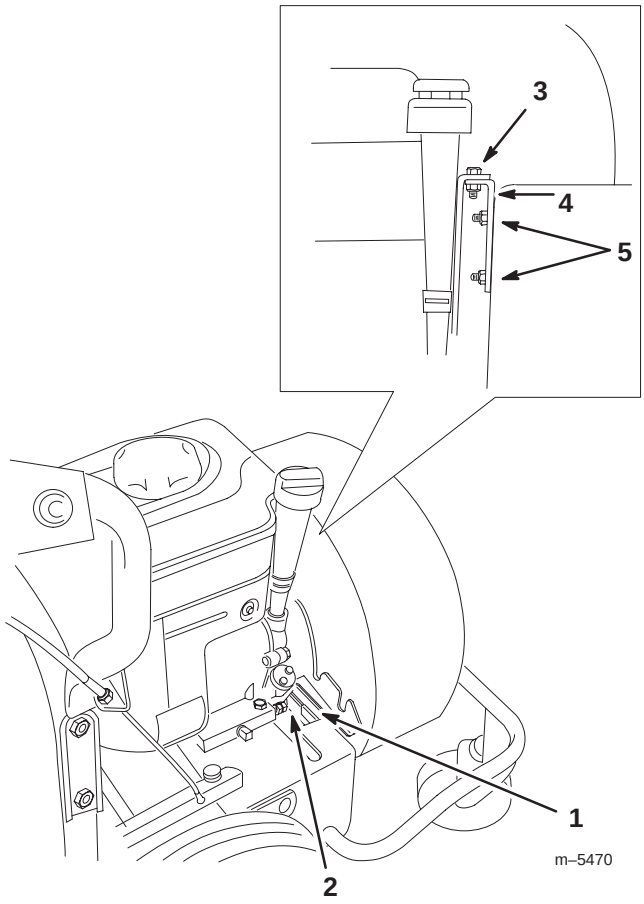

Figure 17

Housing in Blower Position

1. Lower blower housing mounting bracket
2. Front edge of engine base
3. Bolt
4. Engine bracket
5. Locknuts and housing mounting studs

13. Secure the bracket to the engine bracket with the bolt removed previously (Fig. 17).

14. Install the blower intake screen, securing it with 1 of the washers and locknuts removed in step 2 (Fig. 15).

Note: Do not use the retainer flange with the blower intake screen.

Caution

The air stream comes out of the blower in excess of 100 mph (160 km/h)and can cause bodily injury or property damage.

Ensure that the air stream is not aimed directly at anybody or anything.

Maintenance

Recommended Maintenance Schedule

Maintenance Service Interval	Maintenance Procedure
Each use	• Check engine oil level • Check for loose fasteners • Remove all dirt and debris from around the muffler
25 hours	• Clean the foam pre-filter and the paper air filter[1] • Grease the rear idler assembly[1]
50 hours or yearly	• Change engine oil[1, 2]
100 hours or yearly	• Check/replace the spark plug • Clean the engine and cooling system[1]
Yearly	• Oil the castor wheels and pivot points[1] • Touch up chipped paint

[1]More often in dusty, dirty conditions.

[2]Change oil after the first 5 operating hours.

Caution

If you leave the wire on the spark plug, someone could start the engine and seriously injure you or other bystanders.

Disconnect the wire from the spark plug (Fig. 18) before you do any maintenance. Set the wire aside so that it does not accidentally contact the spark plug.

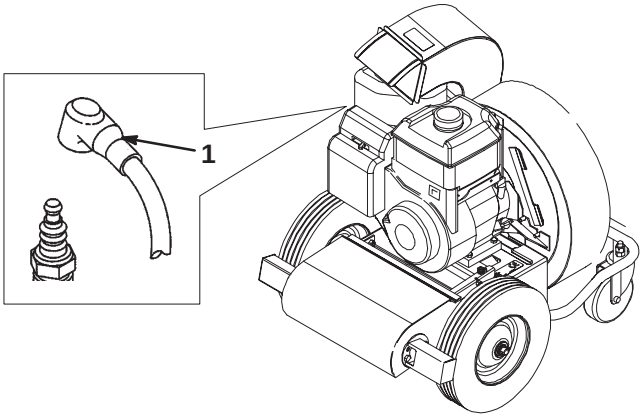

Figure 18

1. Spark plug wire

Servicing the Air Cleaner

Check foam element before each use. Clean the foam element and paper cartridge every 25 operating hours. Clean them more often if you operate in dusty or dirty conditions. Replace both elements if they are excessively dirty of damaged.

To clean the elements, complete the following:

1. Stop the engine and pull the wire off of the spark plug.

2. Unscrew the knob and remove the air cleaner cover (Fig. 19).

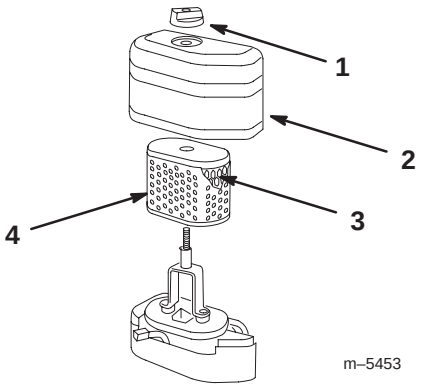

Figure 19

1. Knob
2. Cover
3. Paper element
4. Foam element

3. Slide the foam element off of the paper cartridge and clean it as follows:

A. Wash the foam element in a solution of liquid soap and warm water, squeezing it to remove dirt, but do not twist because it may tear.

B. Rinse the element thoroughly in clear water.

C. Dry the element by wrapping it in a clean rag, squeezing the rag and element.

Important Do not oil either element.

4. Clean the paper element by tapping it on a hard surface to knock the dirt out of it.

Important Do not wash the paper element, or clean it with solvent such as kerosene. Do not use pressurized air to clean it. Cleaning it with any of these methods could damage the element.

5. Install the foam element over the paper element.

6. Install the elements into the air cleaner.

7. Install the air cleaner cover, securing it with the knob.

Important Do not start the engine without the air cleaner elements installed otherwise extreme engine wear and damage will result.

Changing Engine Oil

Change oil after the first 5 operating hours and then every 50 operating hours thereafter or yearly whichever comes first.

Note: Change oil more frequently when operating conditions are extremely dusty or sandy.

Oil Type: SAE 30 or 10W-30 detergent oil (API service SG, SH, SJ, or higher)

Crankcase Capacity: 20 oz. (0.6 l)

Changing the Oil

1. Start the engine and let it run for five minutes. This warms the oil so it drains better.

1. Park the machine on a level surface, stop the engine and pull the wire off of the spark plug (Fig. 18).

2. Clean around the oil dipstick and remove it (Fig. 10).

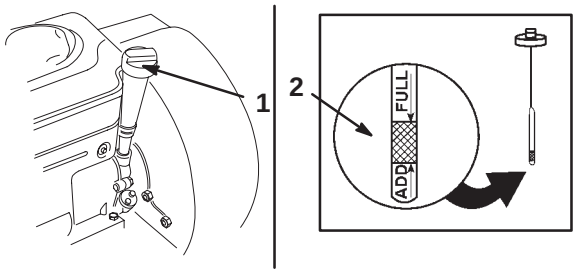

Figure 20

1. Oil dipstick
2. Metal end

3. Clean the area around the drain plug (Fig. 21).

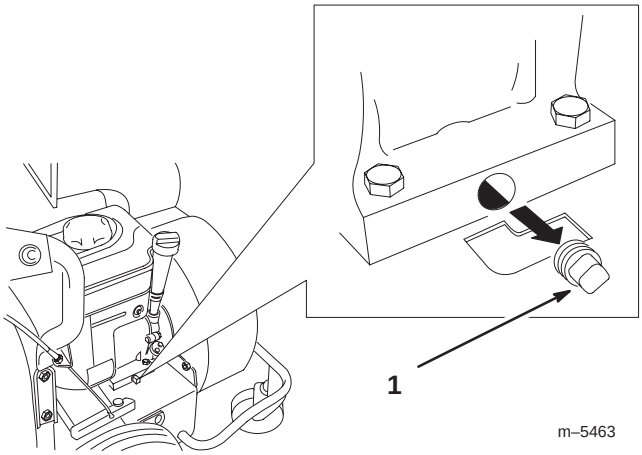

Figure 21

1. Drain plug

4. Place a drain pan under the drain plug to catch the oil.

5. Remove the oil drain plug and allow oil to flow into the drain pan.

6. When finished, install the drain plug and wipe up any oil that spilled.

7. Slowly pour only enough oil (about 20 oz. (0.6 l)) into the dipstick tube to raise the level to the F (full) mark.

Important Do not overfill the crankcase with oil because the engine may be damaged.

8. Replace and tighten the dipstick.

Lubricating the Machine

Oiling the Caster Wheels and Pivot Points

Lubricate the caster wheels and pivot points yearly.

1. Stop the engine and pull the wire off of the spark plug.

2. Place a few drops of engine oil in the following locations:

- Each of the caster wheel bushings
- Where the front wheel support pivots in the engine base (Fig. 22)
- Where the rear traction shafts pivot in the engine base (Fig. 22)

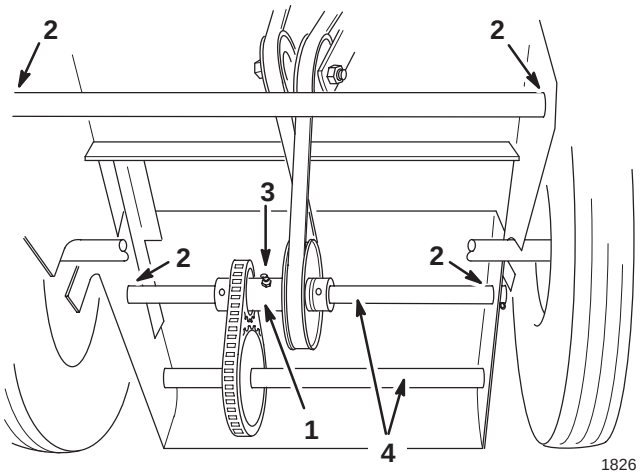

Figure 22

1. Rear idler assembly
2. Oil point
3. Grease point
4. Traction shafts

Greasing the Rear Idler Assembly

Lubricate the rear idler assembly with No. 2 general purpose grease after every 25 hours of operation or more frequently when conditions are dusty or sandy (Fig. 22). Pump grease into the fitting until it oozes out of the bearings.

Emptying the Fuel Tank

1. Stop the engine and wait for it to cool.

Important Drain gasoline from a cold engine only.

2. Disconnect the wire from the spark plug.

3. Remove the cap from the fuel tank.

4. Use a pump-type syphon to drain the gasoline into a clean approved gasoline container.

5. Connect the wire onto the spark plug.

6. Run the engine until it stops.

7. Start the engine again to make sure that all the gasoline is out of the carburetor.

Servicing the Spark Plug

Check the spark plug after every 100 operating hours or yearly whichever comes first. Ensure that the air gap between the center and side electrodes is correct before installing the spark plug. Use a spark plug wrench for removing and installing the spark plug and a gapping tool/feeler gauge to check and adjust the air gap. Install a new spark plug if necessary.

Type: Champion RCJ–8 or equivalent.

Air Gap: 0.030 in. (0.76 mm)

Removing the Spark Plug

1. Stop the engine.

2. Pull the wire off of the spark plug (Fig. 18).

3. Clean the area around the spark plug.

4. Remove the plug from the cylinder head.

Checking the Spark Plug

1. Look at the center of both spark plugs (Fig. 23). If you see light brown or gray on the insulator, the engine is operating properly. A black coating on the insulator usually means the air cleaner is dirty.

Important Never clean the spark plug. Always replace the spark plug when it has a black coating, worn electrodes, an oily film, or cracks.

2. Check the gap between the center and side electrodes (Fig. 23).

3. Bend the side electrode (Fig. 23) if the gap is not correct.

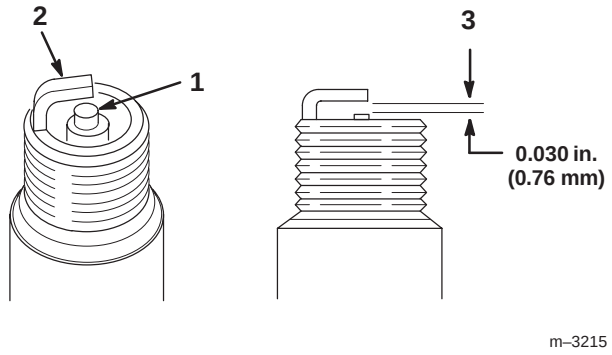

Figure 23

1. Center electrode insulator
2. Side electrode
3. Air gap (not to scale)

Installing the Spark Plug

1. Thread the spark plug into the spark plug hole.

2. Tighten the spark plug to 15 ft.-lb. (20 N·m).

3. Push the wire onto the spark plug (Fig. 18).

Servicing the Traction Drive

Adjusting the Traction Drive

As the friction wheels and tires experience normal wear, it will be necessary to adjust the traction drive linkage occasionally.

1. Stop the engine.

2. Loosen the lower nut on the bottom side of the bracket (Fig. 24).

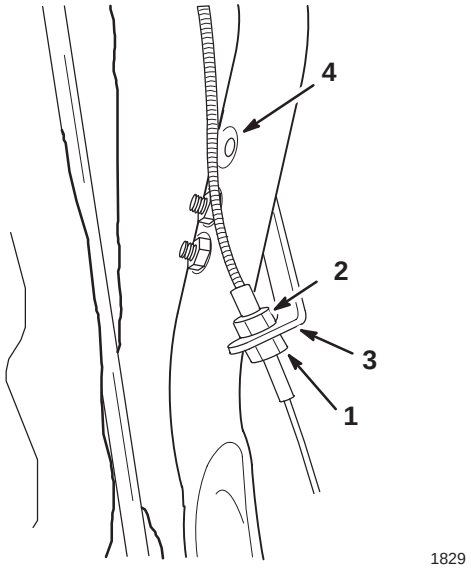

Figure 24

1. Lower nut
2. Upper nut
3. Bracket
4. Upper hole

3. Tighten the upper nut to move the cable housing upward (Fig. 24), which in turn moves the friction wheel closer to the tire. (In effect, this shortens the cable to compensate for the wear.)

Note: If you cannot adjust the cable any further, move the bracket to the upper hole in the handle and start the adjustment procedure over again (Fig. 24).

4. When the proper adjustment is attained, tighten the lower nut against the bracket to secure the adjustment (Fig. 24).

If you adjusted the traction drive but the wheels do not turn when the lever is operated, adjust the drive belt.

Adjusting the Drive Belt

Adjust the drive belt if loss of traction occurs or if the belt slips. Adjust the traction drive first.

1. Stop the engine and pull the wire off of the spark plug.

2. Loosen the nut and slide the pulley until belt is at the proper tension (Fig. 25).

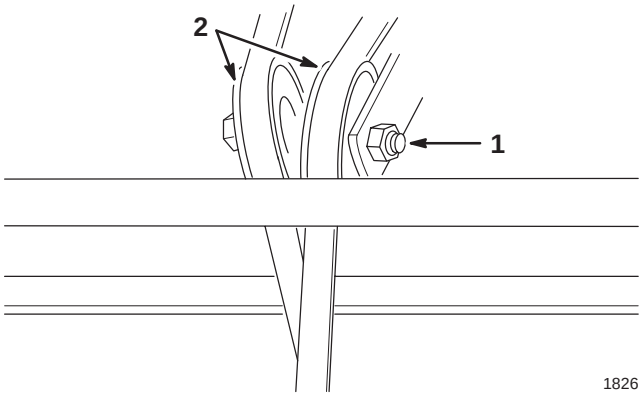

Figure 25

1. Nut
2. Pulleys

3. Tighten the nut just enough so the belt does not slip; do not over-tighten it.

Note: When you can no longer adjust a pulley, use the other pulley. When the adjustment is used up on both pulleys, replace the belt.

Replacing the Drive Belt

1. Stop the engine and pull the wire off of the spark plug.

2. Drain the gasoline from fuel tank; refer to Emptying the Fuel Tank, page 16.

3. Drain the oil from crankcase; refer to Changing Engine Oil, page 15.

4. Cut the old belt and remove it (Fig. 25).

5. Loosen the adjustment nuts on the belt tightener pulleys (Fig. 25).

6. Remove the front snout (Fig. 15).

7. Slip the bag off of the chute and remove the chute (Fig. 15).

8. Loosen the two locknuts securing the blower housing to the stabilizer bracket (Fig. 26).

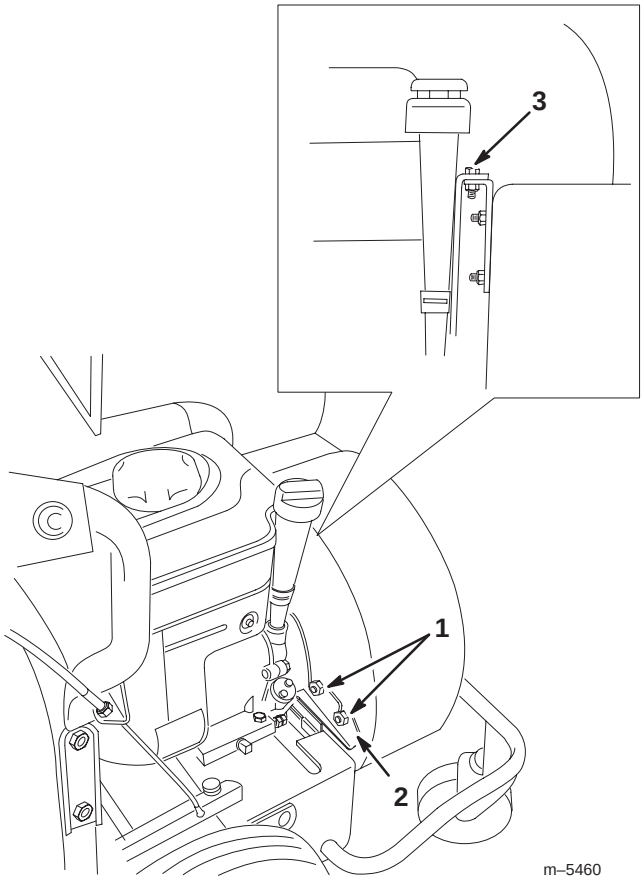

Figure 26

1. Locknuts
2. Stabilizer bracket
3. Bolt

9. Remove the bolt securing the blower housing and lift the housing as much as the impeller allows (Fig. 26).

10. Route the new belt around the blower housing (Fig. 27).

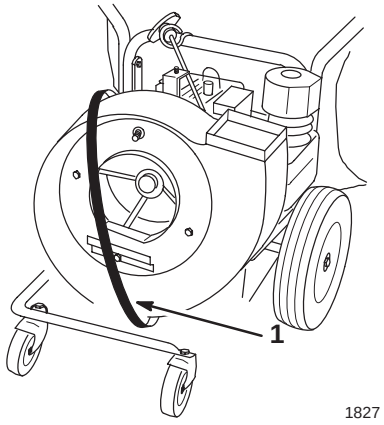

Figure 27

1. Belt around housing

11. Insert the belt over the pulley and down through the opening (Fig. 28).

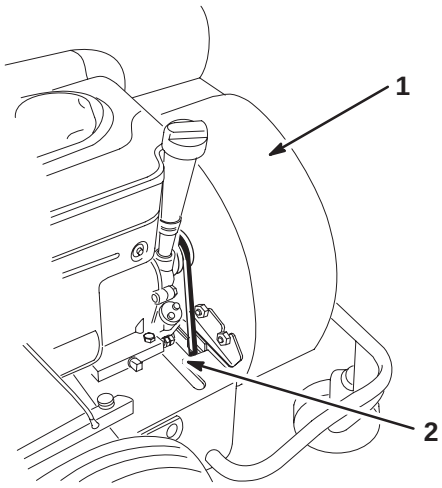

Figure 28

1. Housing
2. Feed belt down through opening

12. Install and secure the blower housing with the bolt removed previously and tighten the two nuts you loosened.

13. Tip the unit back onto the handles.

14. Remove the cotter pin from the end of the traction drive shaft, loosen the set screw in each of the collars, and tap the shaft to the left far enough so the new belt can be installed (Fig. 29).

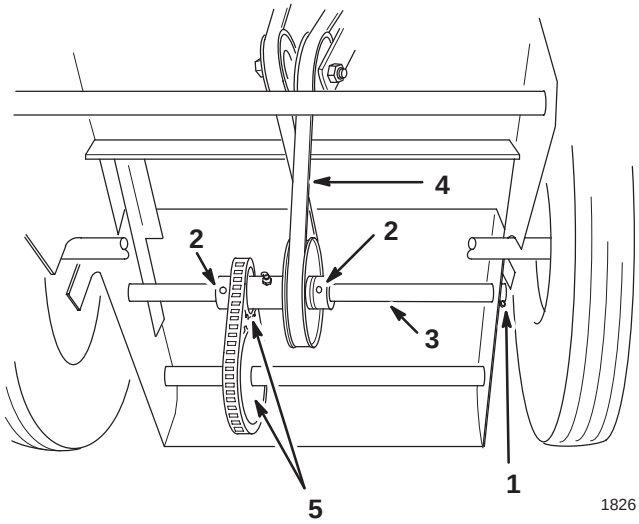

Figure 29

1. Cotter pin
2. Set screws
3. Shaft
4. Belt
5. Sprockets

15. Install the belt around the drive shaft pulley (Fig. 29).

Important The belt must be installed as shown in Figure 29 or the traction drive will run backward.

16. Return the shaft to its original position, secure the collars with the set screws, and the shaft with the cotter pin (Fig. 29).

17. Ensure that the sprockets are aligned properly (Fig. 29).

18. Adjust the belt; refer to Adjusting the Drive Belt, page 17.

Storage

Storing the Machine

1. Stop the engine and remove the wire from the spark plug.

2. Remove dirt and grime from the external parts of the entire machine, especially the engine. Clean dirt and chaff from the outside of the engine cooling system.

Important Do not pressure wash the engine.

3. Service the air cleaner; refer to Servicing the Air Cleaner, page 14.

4. Lubricate the machine; refer to Lubricating the Machine, page 16.

5. Change the oil; refer to Changing Engine Oil, page 15.

6. Remove and check the spark plug; refer to Servicing the Spark Plug, page 16.

7. With the spark plug removed from the engine, pour 2 tablespoons (10 ml) of engine oil into the spark plug hole.

8. Place rags over the spark plug hole to catch any oil spray, then use the starter rope to crank the engine and distribute the oil inside the cylinder.

9. Install the spark plug, but do not install the wire on it.

10. For storage over 30 days, prepare the traction unit as follows.

    A. Add a petroleum based stabilizer/conditioner to fuel in the tank. Follow mixing instructions from stabilizer manufacturer. (1 oz. per gallon). **Do not use an alcohol based stabilizer (ethanol or methanol).**

Note: A fuel stabilizer/conditioner is most effective when mixed with fresh gasoline and used at all times.

    B. Run the engine to distribute conditioned fuel through the fuel system (5 minutes).

    C. Stop the engine, allow it to cool and drain the fuel tank using a pump type syphon; refer to Emptying the Fuel Tank, page 16.

    D. Restart the engine and run it until it stops.

    E. Choke the engine.

    F. Start and run the engine until it will not start again.

    G. Dispose of fuel properly. Recycle as per local codes.

Important Do not store stabilizer/conditioned gasoline over 90 days.

11. Check and tighten all bolts, nuts, and screws. Repair or replace any part that is damaged or defective.

12. Paint all scratched or bare metal surfaces. Paint is available from your Authorized Service Dealer.

13. Store the machine in a clean, dry garage or storage area. Remove the key from the ignition switch and keep it in a memorable place.

14. Cover the the machine to protect it and keep it clean.

Removing the Machine from Storage

1. Check and tighten all fasteners.

2. Remove the spark plug and spin engine rapidly using starter to blow excess oil from the cylinder.

3. Install the spark plug and torque it to 15 ft.-lbs. (20 N·m).

4. Fill fuel tank with fresh, clean gasoline.

5. Check engine oil level.

6. Connect spark plug wire.