Form No. 3477-807 Rev A

TORO®

Count on it.

Operator's Manual

Z Master® Professional 6000 Series Riding Mower

with TURBO FORCE® Side Discharge Mower

Model No. 72926—Serial No. 420000000 and Up
Model No. 72928—Serial No. 420000000 and Up
Model No. 72976—Serial No. 420000000 and Up
Model No. 72977—Serial No. 420000000 and Up

Register at www.Toro.com.
Original Instructions (EN)

3477-807

It is a violation of California Public Resource Code Section 4442 or 4443 to use or operate the engine on any forest-covered, brush-covered, or grass-covered land unless the engine is equipped with a spark arrester, as defined in Section 4442, maintained in effective working order or the engine is constructed, equipped, and maintained for the prevention of fire.

The enclosed engine owner's manual is supplied for information regarding the US Environmental Protection Agency (EPA) and the California Emission Control Regulation of emission systems, maintenance, and warranty. Replacements may be ordered through the engine manufacturer.

Gross or Net Torque: The gross or net torque of this engine was laboratory rated by the engine manufacturer in accordance with the Society of Automotive Engineers (SAE) J1940 or J2723. As configured to meet safety, emission, and operating requirements, the actual engine torque on this class of mower will be significantly lower. Please refer to the engine manufacturer's information included with the machine.

⚠ WARNING

CALIFORNIA
Proposition 65 Warning

The engine exhaust from this product contains chemicals known to the State of California to cause cancer, birth defects, or other reproductive harm.

Battery posts, terminals, and related accessories contain lead and lead compounds, chemicals known to the State of California to cause cancer and reproductive harm. Wash hands after handling.

Use of this product may cause exposure to chemicals known to the State of California to cause cancer, birth defects, or other reproductive harm.

Introduction

This rotary-blade, riding lawn mower is intended to be used by professional, hired operators. It is designed primarily for cutting grass on well-maintained lawns on residential or commercial properties. Using this product for purposes other than its intended use could prove dangerous to you and bystanders.

Read this information carefully to learn how to operate and maintain your product properly and to avoid injury and product damage. You are responsible for operating the product properly and safely.

Visit www.Toro.com for product safety and operation training materials, accessory information, help finding a dealer, or to register your product.

Whenever you need service, genuine Toro parts, or additional information, contact an Authorized Service Dealer or Toro Customer Service and have the model and serial numbers of your product ready. Figure 1 identifies the location of the model and serial numbers on the product. Write the numbers in the space provided.

Important: **With your mobile device, you can scan the QR code on the serial number decal (if equipped) to access warranty, parts, and other product information.**

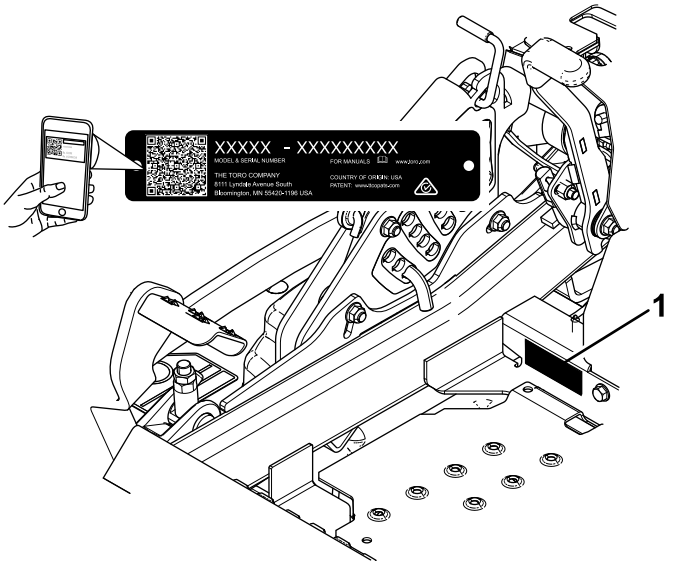

g233771

Figure 1

1. Model and serial number location

Model No. _____

Serial No. _____

© 2025—The Toro® Company
8111 Lyndale Avenue South
Bloomington, MN 55420

Contact us at www.Toro.com.
Printed in the USA
All Rights Reserved

This manual uses 2 words to highlight information. **Important** calls attention to special mechanical information and **Note** emphasizes general information worthy of special attention.

The safety-alert symbol (Figure 2) appears both in this manual and on the machine to identify important safety messages that you must follow to avoid accidents. This symbol will appear with the word **Danger**, **Warning**, or **Caution**.

- **Danger** indicates an imminently hazardous situation which, if not avoided, **will** result in death or serious injury.
- **Warning** indicates a potentially hazardous situation which, if not avoided, **could** result in death or serious injury.
- **Caution** indicates a potentially hazardous situation which, if not avoided, **may** result in minor or moderate injury.



sa-black

Figure 2
Safety-alert symbol

Contents

Safety 4
General Safety 4
Slope Indicator 5
Safety and Instructional Decals 6
Product Overview 11
Controls 11
Specifications 13
Attachments/Accessories 13
Before Operation 13
Before Operation Safety 13
Adding Fuel 14
Performing Daily Maintenance 15
Breaking in a New Machine 15
Using the Rollover-Protection System (ROPS) 15
Using the Safety-Interlock System 16
Positioning the Seat 17
Unlatching the Seat 17
Changing the Seat Suspension 18
During Operation 18
During Operation Safety 18
Operating the Parking Brake 20
Operating the Mower Blade-Control Switch (PTO) 21
Starting the Engine 21
Shutting Off the Engine 22
Using the Motion-Control Levers 22
Driving the Machine 22
Using the Side Discharge 24
Adjusting the Height of Cut 24
Adjusting the Anti-Scalp Rollers 25
Adjusting the Flow Baffle Knob 26
Positioning the Flow Baffle 27
Operating Tips 28
After Operation 29
After Operation Safety 29
Using the Fuel-Shutoff Valve 29
Using the Drive-Wheel-Release Valves 29
Transporting the Machine 30
Maintenance 32
Maintenance Safety 32
Recommended Maintenance Schedule(s) 32
Pre-Maintenance Procedures 33
Removing or Installing the Floor Pan 33
Lubrication 34
Greasing the Machine 34
Lubricating the Mower Deck-Lift Pivots 35
Greasing the Mower Deck 35
Greasing the Caster-Wheel Hubs 36
Engine Maintenance 37
Engine Safety 37
Servicing the Engine 37
Checking the Spark Arrester 42
Fuel System Maintenance 43
Servicing the Electronic Fuel-Injection System 43
Replacing the Low-Pressure Fuel Filter 43
Servicing the High-Pressure Fuel Filter 43
Servicing the Fuel Tank 43
Electrical System Maintenance 44
Electrical System Safety 44
Servicing the Battery 44
Servicing the Fuses 46
Drive System Maintenance 46
Checking the Seat Belt 46
Checking the Roll-Bar Knobs 46
Adjusting the Tracking 47
Checking the Tire Pressure 48
Checking the Wheel Lug Nuts 48
Checking the Wheel-Hub Slotted Nut 48
Adjusting the Caster-Pivot Bearing 48
Removing the Clutch Shim 49
Cooling System Maintenance 51
Cooling System Safety 51
Cleaning the Engine Screen and Engine-Oil Cooler 51
Cleaning the Engine-Cooling Fins and Shrouds 51
Checking and Cleaning the Hydraulic-Unit Shrouds 52
Brake Maintenance 52
Adjusting the Parking Brake 52
Belt Maintenance 53
Inspecting the Belts 53

Replacing the Mower Belt 53
Replacing the Hydraulic Pump-Drive Belt 55
Controls System Maintenance 55
Adjusting the Control-Handle Position 55
Adjusting the Motion-Control Linkage 56
Adjusting the Motion-Control Damper 57
Adjusting the Motion-Control Neutral-Lock Pivot 57
Hydraulic System Maintenance 58
Hydraulic System Safety 58
Hydraulic-Fluid Specifications 58
Checking the Hydraulic Fluid 58
Changing the Hydraulic Fluid and Filters 59
Blade Maintenance 60
Blade Safety 60
Servicing the Cutting Blades 60
Leveling the Mower Deck 63
Removing the Mower Deck 65
Replacing the Grass Deflector 66
Cleaning 67
Cleaning under the Mower Deck 67
Disposing of Waste 67
Storage 68
Storage Safety 68
Cleaning and Storage 68
Troubleshooting 69
Schematics 72

Safety

General Safety

This product is capable of amputating hands and feet and of throwing objects. Always follow all safety instructions to avoid serious personal injury or death.

- Read and understand the contents of this *Operator's Manual* before starting the engine.
- Keep bystanders and children away.
- Do not allow children or untrained people to operate or service the machine. Allow only people who are responsible, trained, familiar with the instructions, and physically capable to operate or service the machine.
- Always keep the roll bar in the fully raised and locked position and use the seat belt.
- Do not operate the machine near drop-offs, ditches, embankments, water, or other hazards, or on slopes greater than 15°.
- Do not put your hands or feet near moving components of the machine.
- Do not operate the machine without all guards, safety switches, and other safety protective devices in place and functioning properly.
- Shut off the engine, remove the key, and wait for all moving parts to stop before leaving the operator's position. Allow the machine to cool before servicing, adjusting, fueling, cleaning, or storing it.

Slope Indicator

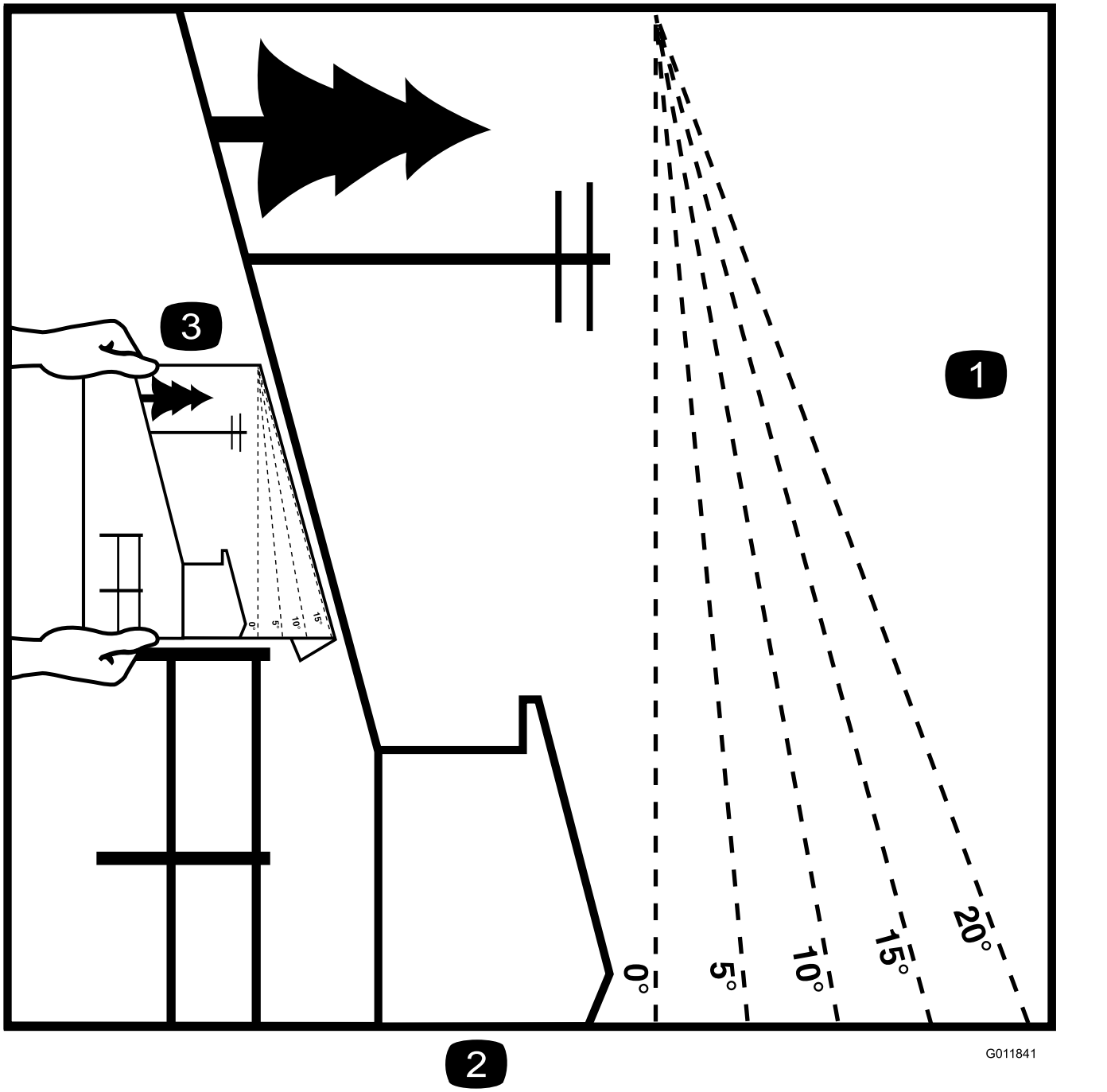

Figure 3

You may copy this page for personal use.

1. The maximum slope you can operate the machine on is **15 degrees**. Use the slope chart to determine the degree of slope of hills before operating. **Do not operate this machine on a slope greater than 15 degrees.** Fold along the appropriate line to match the recommended slope.
2. Align this edge with a vertical surface, a tree, building, fence pole, etc.
3. Example of how to compare slope with folded edge

Safety and Instructional Decals

Safety decals and instructions are easily visible to the operator and are located near any area of potential danger. Replace any decal that is damaged or missing.



decalbatterysymbols

Battery Symbols

Some or all of these symbols are on your battery.

1. Explosion hazard
2. No fire, open flame, or smoking
3. Caustic liquid/chemical burn hazard
4. Wear eye protection.
5. Read the *Operator's Manual*.
6. Keep bystanders away from the battery.
7. Wear eye protection; explosive gases can cause blindness and other injuries.
8. Battery acid can cause blindness or severe burns.
9. Flush eyes immediately with water and get medical help fast.
10. Contains lead; do not discard

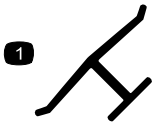

decaloemmarkt

Manufacturer's Mark

1. This mark indicates that the blade is identified as a part from the original machine manufacturer.



decal58-6520

58-6520

1. Grease

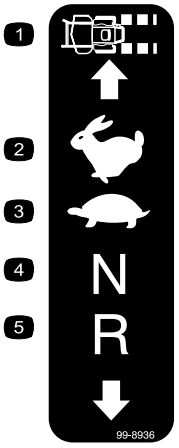

decal99-8936

99-8936

1. Machine speed
2. Fast
3. Slow
4. Neutral
5. Reverse



decal106-2655

106-2655

1. Warning—do not touch or approach moving belts; remove the key and read the instructions before servicing or performing maintenance.

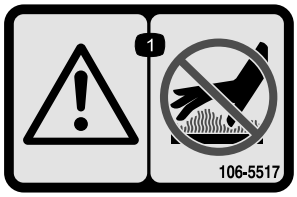

decal106-5517

106-5517

1. Warning—do not touch the hot surface.

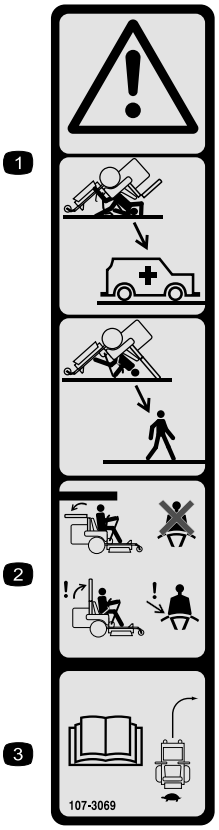

decal107-3069

107-3069

1. Warning—there is no rollover protection when the roll bar is down.
2. To avoid injury or death from a rollover accident, keep the roll bar in the fully raised and locked position and wear the seat belt. Lower the roll bar only when absolutely necessary; do not wear the seat belt when the roll bar is down.
3. Read the *Operator's Manual*; drive slowly and carefully.

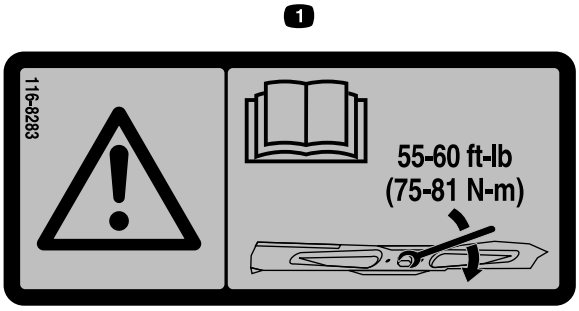

decal116-8283

116-8283

1. Warning—read the *Operator's Manual* for instructions on torquing the blade bolt/nut to 75 to 81 N·m (55 to 60 ft-lb).



decal133-8062

133-8062

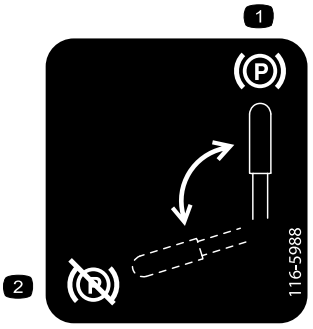

decal116-5988

116-5988

1. Parking brake—engaged
2. Parking brake—disengaged



decal116-8726

116-8726

1. Read the *Operator's Manual* for the recommended hydraulic fluid.

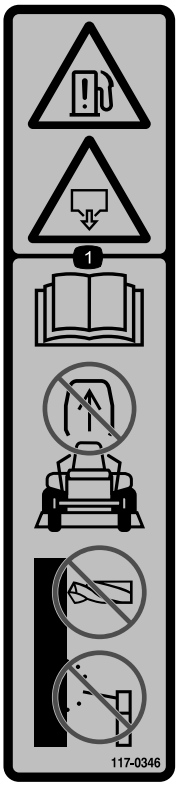

decal117-0346

117-0346

1. Fuel leak hazard—read the *Operator's Manual*; do not attempt to remove the roll bar; do not weld, drill, or modify the roll bar in any way.



decal126-2055

126-2055

1. Wheel lug nut—torque to 129 N·m (95 ft-lb).
2. Wheel hub nut—torque to 319 N·m (235 ft-lb).
3. Read the *Operator's Manual* before performing maintenance; check the torque after the first 100 hours and every 500 hours after.

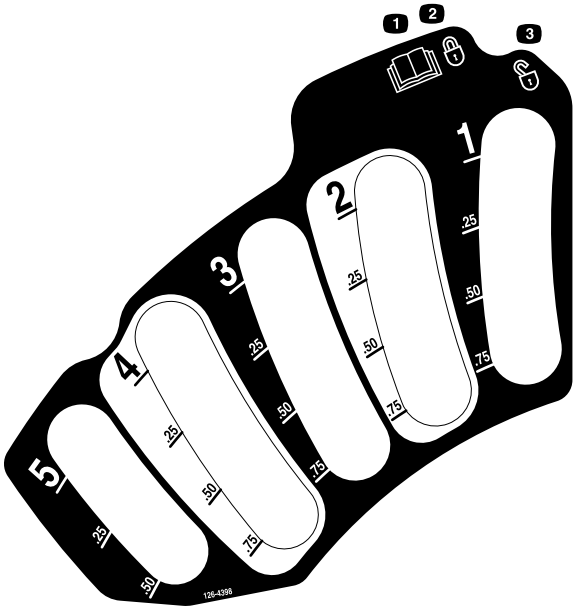

decal126-4398

126-4398

1. Read the *Operator's Manual*.
2. Lock
3. Unlock

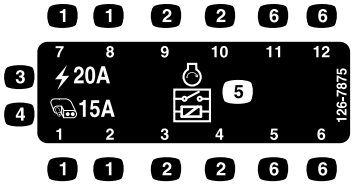

decal126-7875

126-7875

1. Fuse location
2. Relay location
3. Main, 20A
4. Auxiliary, 15A
5. Start relay
6. Not used

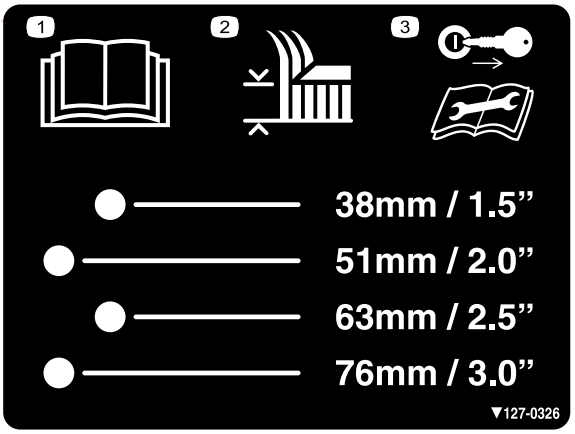

decal127-0326

127-0326

1. Read the *Operator's Manual*.
2. Height of cut
3. Remove the key and read the *Operator's Manual* before performing maintenance.

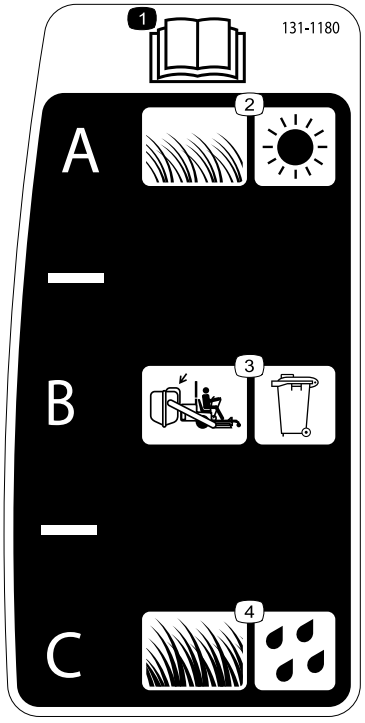

decal131-1180

131-1180

1. Read the *Operator's Manual*.
2. Short, light grass; dry conditions
3. Bagging setting
4. Tall, dense grass; wet conditions

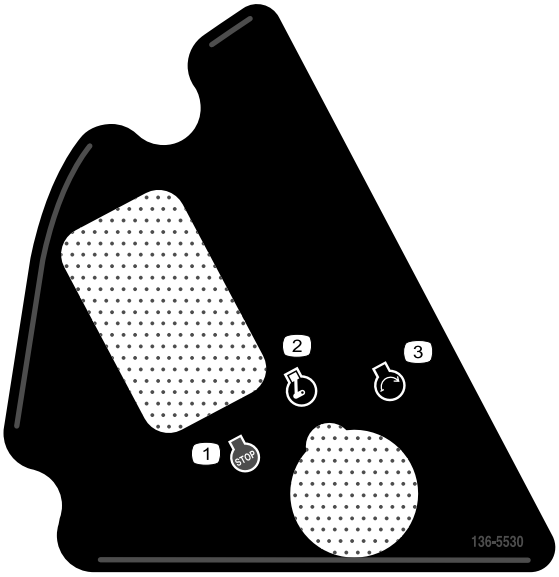

decal136-5530

136-5530

1. Engine—stop
2. Engine—run
3. Engine—start

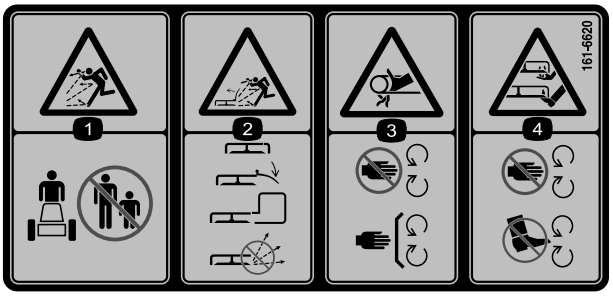

decal161-6620

161-6620

1. Thrown object hazard—keep bystanders away from the machine.
2. Thrown object hazard, raised deflector—lower the deflector before operating the machine; always operate the machine with the deflector, discharge cover, or grass collection system in place; do not operate the machine with the discharge opening uncovered.
3. Entanglement hazard—keep away from moving parts; keep all guards and shields in place.
4. Severing hazard of hand or foot—keep hands and feet away from moving parts.

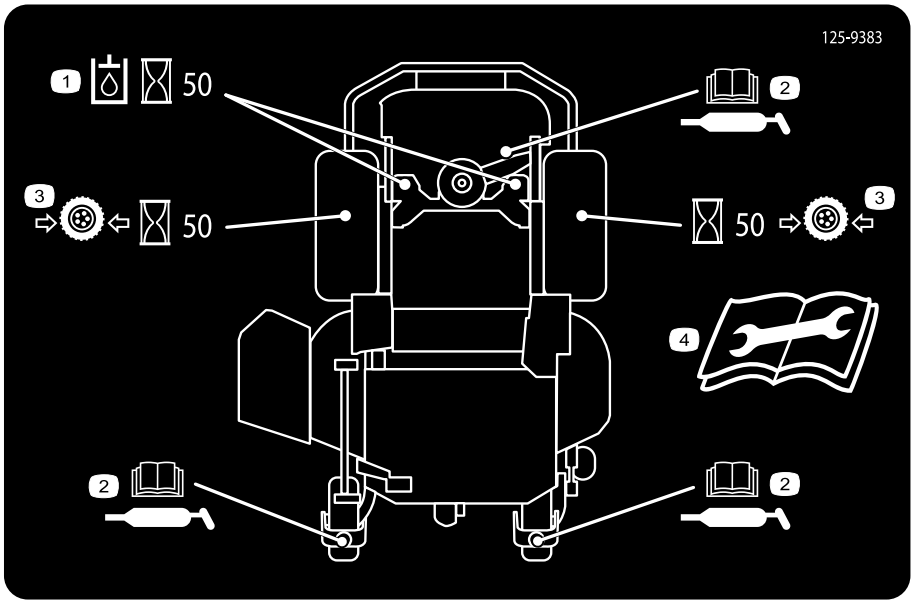

decal125-9383

125-9383

1. Check the hydraulic fluid every 50 operating hours.
2. Read the *Operator's Manual* for information on lubricating the machine.
3. Check the tire pressure every 50 operating hours.
4. Read the *Operator's Manual* before servicing or performing maintenance.

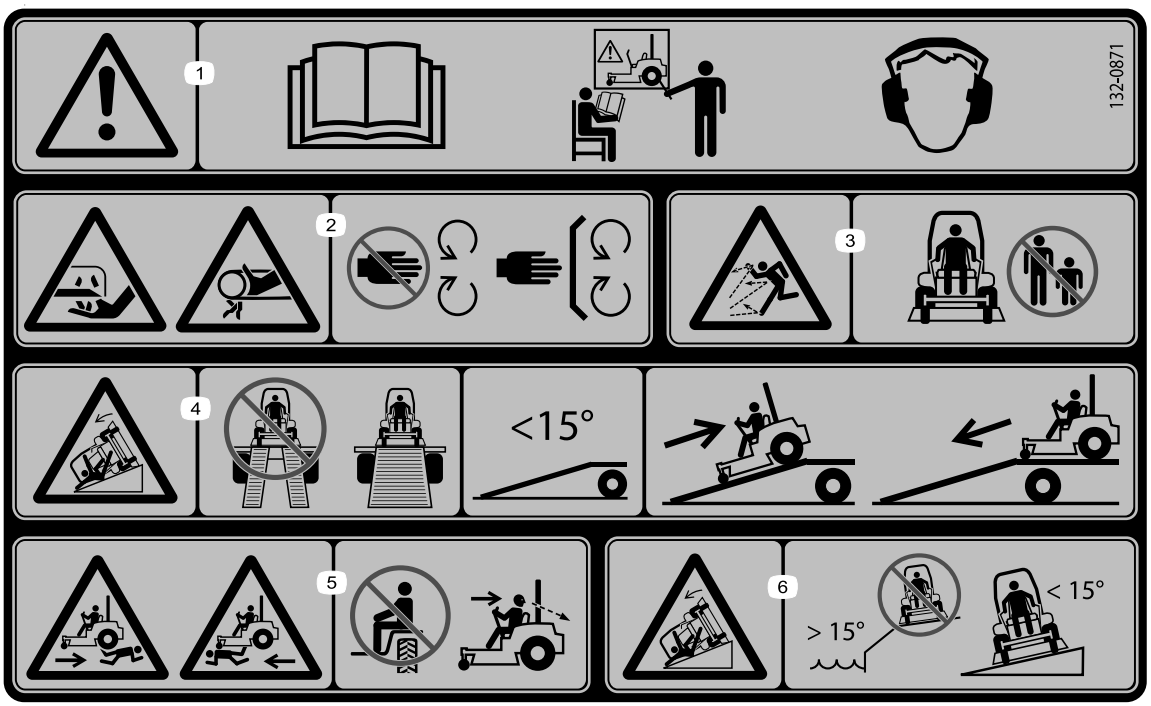

decal132-0871

132-0871

Note: This machine complies with the industry standard stability test in the static lateral and longitudinal tests with the maximum recommended slope indicated on the decal. Review the instructions for operating the machine on slopes in the *Operator's Manual* as well as the conditions in which you would operate the machine to determine whether you can operate the machine in the conditions on that day and at that site. Changes in the terrain can result in a change in slope operation for the machine.

1. Warning—read the *Operator's Manual*; all operators should be trained before operating the machine; wear hearing protection.
2. Cutting/dismemberment hazard of hand—stay away from moving parts; keep all guards and shields in place.
3. Thrown object hazard—keep bystanders away.
4. Tipping hazard—do not use dual ramps when loading onto a trailer; use 1 ramp wide enough for the machine; use a ramp with a slope less than 15°; back up the ramp (in reverse) and drive forward off the ramp.
5. Runover hazard—do not carry passengers; look behind you when moving in reverse.
6. Tipping hazard—do not use the machine near drop-offs or on slopes greater than 15°; only operate across slopes less than 15°.

Product Overview

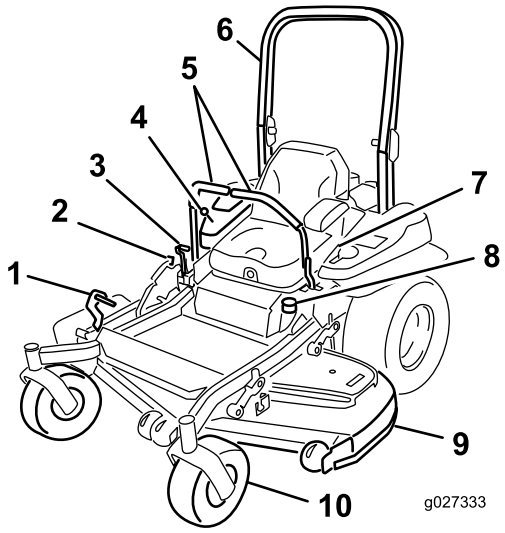

g027333

Figure 4

1. Height-of-cut deck-lift pedal
2. Transport lock
3. Parking-brake lever
4. Controls
5. Motion-control levers
6. Roll bar
7. Seat belt
8. Fuel cap
9. Mower deck
10. Caster wheel

Controls

Become familiar with all the controls before you start the engine and operate the machine.

Control Panel

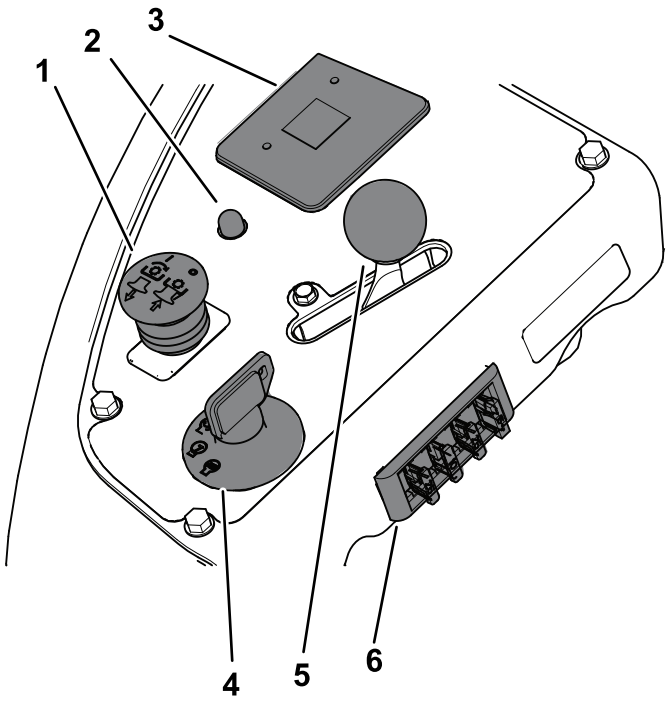

Figure 5

1. Blade-control switch (power takeoff)
2. Malfunction-indicator light (MIL)
3. Hour meter
4. Key switch
5. Throttle control
6. Fuses

Key Switch

The key switch, used to start and shut off the engine, has 3 positions: OFF, RUN, and START. Refer to Starting the Engine (page 21).

Throttle Control

The throttle controls the engine speed, and it has a continuous-variable setting from the SLOW to FAST position.

Choke Control

Use the choke control to start a cold engine.

Blade-Control Switch (Power Takeoff)

The blade-control switch, represented by a power-takeoff (PTO) symbol, engages and disengages power to the mower blades (Figure 5).

Hour Meter

The hour meter records the number of hours the engine has operated. It operates when the engine is running. Use these times for scheduling regular maintenance.

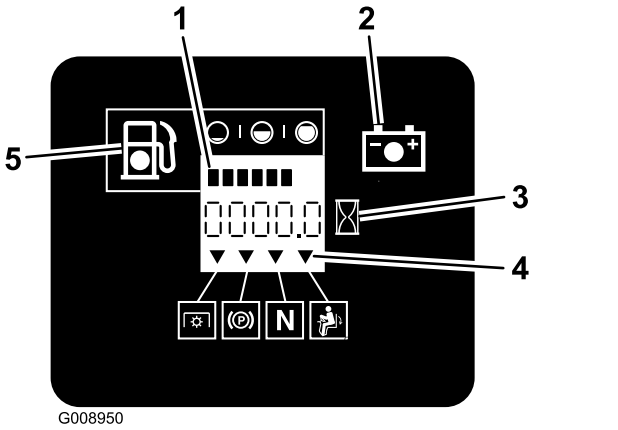

Figure 6

1. Fuel gauge (bars)
2. Battery light
3. Hour meter
4. Safety-interlock symbols
5. Low-fuel indicator light

Fuel Gauge

The fuel gauge is located within the hour meter, and the bars light up when the key switch is in the ON position (Figure 6).

The indicator light appears when the fuel level is low (approximately 3.8 L (1 US gallon) remaining in the fuel tank).

Safety-Interlock Indicators

There are symbols on the hour meter that indicate with a black triangle that the interlock component is positioned correctly (Figure 6).

Battery-Indicator Light

If you turn the key switch to the ON position for a few seconds, the battery voltage displays in the area where the hours are normally displayed.

The battery light turns on when the key switch is turned on and when the charge is below the correct operating level (Figure 6).

Motion-Control Levers

Use the motion-control levers to drive the machine forward, reverse, and turn either direction.

Neutral-Lock Position

Move the motion-control levers outward from the center to the NEUTRAL-LOCK position when exiting the machine. Always position the motion-control levers into the NEUTRAL-LOCK position when you stop the machine or leave it unattended.

Parking-Brake Lever

Whenever you shut off the engine, engage the parking brake to prevent accidental movement of the machine.

Fuel-Shutoff Valve

Close the fuel-shutoff valve when transporting or storing the machine; refer to Storage (page 68).

Specifications

Note: Specifications and design are subject to change without notice.

Width:

	60-inch Deck	72-inch Deck
Without Deck	135 cm (53 inches)	150 cm (59 inches)
Deflector Up	157 cm (62 inches)	187 cm (74 inches)
Deflector Down	192 cm (76 inches)	222 cm (88 inches)

Length:

	60-inch Deck	72-inch Deck
Roll Bar - Up	211 cm (83 inches)	219 cm (83 inches)
Roll Bar - Down	215 cm (85 inches)	223 cm (88 inches)

Height:

Roll Bar - Up	Roll Bar - Down
179 cm (71 inches)	119 cm (47 inches)

Weight:

Model	Weight
72976	576 kg (1,269 lb)
72977	612 kg (1,349 lb)

Attachments/Accessories

A selection of Toro approved attachments and accessories is available for use with the machine to enhance and expand its capabilities. Contact your Authorized Service Dealer or authorized Toro distributor or go to www.Toro.com for a list of all approved attachments and accessories.

To ensure optimum performance and continued safety certification of the machine, use only genuine Toro replacement parts and accessories. Replacement parts and accessories made by other manufacturers could be dangerous, and such use could void the product warranty.

Operation

Note: Determine the left and right sides of the machine from the normal operating position.

Before Operation

Before Operation Safety

General Safety

- Do not allow children or untrained people to operate or service the machine. Local regulations may restrict the age of the operator. The owner is responsible for training all operators and mechanics.
- Inspect the area where you will use the machine, and remove all objects that could interfere with the operation of the machine or that the machine could throw.
- Become familiar with the safe operation of the equipment, operator controls, and safety signs.
- Check that operator-presence controls, safety switches, and guards are attached and working properly. Do not operate the machine unless they are functioning properly.
- Shut off the engine, remove the key, and wait for all moving parts to stop before leaving the operator's position. Allow the machine to cool before servicing, adjusting, fueling, cleaning, or storing it.
- Before mowing, inspect the machine to ensure that the cutting assemblies are working properly.
- Evaluate the terrain to determine the appropriate equipment and any attachments or accessories required to operate the machine properly and safely.
- Wear appropriate clothing, including eye protection; long pants; substantial, slip-resistant footwear; and hearing protection. Tie back long hair and do not wear loose clothing or loose jewelry.
- Do not carry passengers on the machine.
- Keep bystanders and pets away from the machine during operation. Shut off the machine and attachment(s) if anyone enters the area.
- Do not operate the machine unless all guards and safety devices, such as the deflectors and the entire grass catcher, are in place and functioning properly. Replace worn or deteriorated parts when necessary.

Fuel Safety

- Fuel is extremely flammable and highly explosive. A fire or explosion from fuel can burn you and others and can damage property.
  - To prevent a static charge from igniting the fuel, place the container and/or machine directly on the ground before filling, not in a vehicle or on an object.
  - Fill the fuel tank outdoors on level ground, in an open area, and when the engine is cold. Wipe up any fuel that spills.
  - Do not handle fuel when smoking or around an open flame or sparks.
  - Do not remove the fuel cap or add fuel to the tank while the engine is running or hot.
  - If you spill fuel, do not attempt to start the engine. Avoid creating a source of ignition until the fuel vapors have dissipated.
  - Store fuel in an approved container and keep it out of the reach of children.
- Fuel is harmful or fatal if swallowed. Long-term exposure to vapors can cause serious injury and illness.
  - Avoid prolonged breathing of vapors.
  - Keep your hands and face away from the nozzle and the fuel-tank opening.
  - Keep fuel away from your eyes and skin.
- Do not store the machine or fuel container where there is an open flame, spark, or pilot light, such as on a water heater or on other appliances.
- Do not fill containers inside a vehicle or on a truck or trailer bed with a plastic liner. Always place containers on the ground and away from your vehicle before filling.
- Remove the equipment from the truck or trailer and refuel it while it is on the ground. If this is not possible, then refuel from a portable container rather than from a fuel-dispenser nozzle.
- Do not operate the machine without the entire exhaust system in place and in proper working condition.
- Keep the fuel-dispenser nozzle in contact with the rim of the fuel tank or container opening at all times until fueling is complete. Do not use a nozzle lock-open device.
- If you spill fuel on your clothing, change your clothing immediately.
- Do not overfill the fuel tank. Replace the fuel cap and tighten it securely.
- Clean grass and debris from the cutting unit, muffler, drives, grass catcher, and engine compartment to help prevent fires. Clean up oil or fuel spills.

Adding Fuel

Recommended Fuel

- For best results, use only clean, fresh (less than 30 days old), unleaded gasoline with an octane rating of 87 or higher ((R+M)/2 rating method).
- **Ethanol**: Gasoline with up to 10% ethanol (gasohol) or 15% MTBE (methyl tertiary butyl ether) by volume is acceptable. Ethanol and MTBE are not the same. Gasoline with 15% ethanol (E15) by volume is not approved for use. **Never use gasoline that contains more than 10% ethanol by volume**, such as E15 (contains 15% ethanol), E20 (contains 20% ethanol), or E85 (contains up to 85% ethanol). Using unapproved gasoline may cause performance problems and/or engine damage which may not be covered under warranty.
- **Do not** use gasoline containing methanol.
- **Do not** store fuel either in the fuel tank or fuel containers over the winter unless you use a fuel stabilizer.
- **Do not** add oil to gasoline.

Using Stabilizer/Conditioner

Use a fuel stabilizer/conditioner in the machine to provide the following benefits:

- Keeps fuel fresh longer when used as directed by the fuel-stabilizer manufacturer
- Cleans the engine while it runs
- Eliminates gum-like varnish buildup in the fuel system, which causes hard starting

Important: **Do not use fuel additives containing methanol or ethanol.**

Add the correct amount of fuel stabilizer/conditioner to the fuel.

Note: A fuel stabilizer/conditioner is most effective when mixed with fresh fuel. To minimize the chance of varnish deposits in the fuel system, use fuel stabilizer at all times.

Filling the Fuel Tank

1. Park the machine on a level surface.
2. Engage the parking brake.
3. Shut off the engine and remove the key.
4. Clean around the fuel-tank cap.
5. Fill the fuel tank to the bottom of the filler neck (Figure 7).

Note: Do not fill the fuel tank completely full. The empty space in the tank allows the fuel to expand.

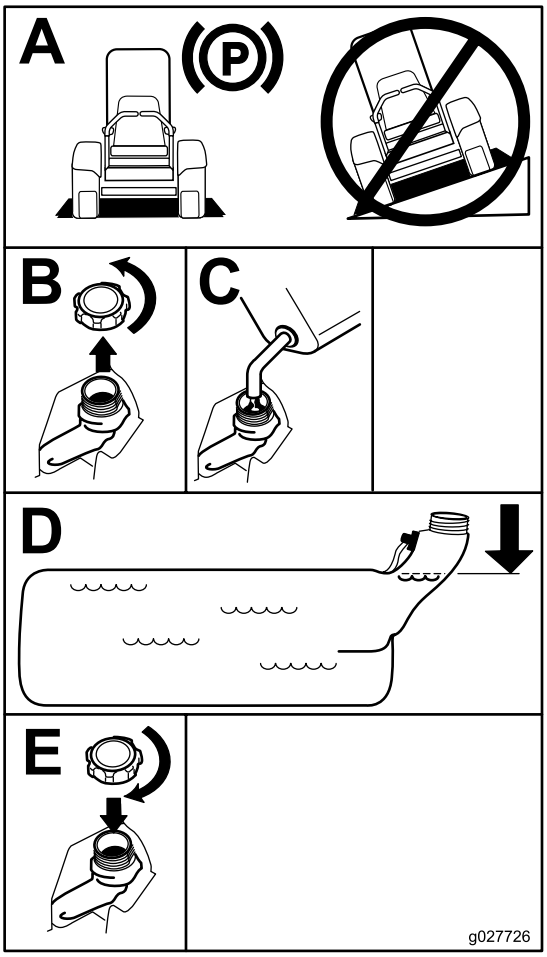

g027726

Figure 7

Performing Daily Maintenance

Before starting the machine each day, perform the Each Use/Daily procedures listed in Maintenance (page 32).

Breaking in a New Machine

New engines take time to develop full power. Mower decks and drive systems have higher friction when new, placing additional load on the engine. Allow 40 to 50 hours of break-in time for new machines to develop full power and best performance.

Using the Rollover-Protection System (ROPS)

⚠ WARNING

To avoid injury or death from rollover, keep the roll bar in the fully raised, locked position and use the seat belt.

Ensure that the seat is secured to the machine.

⚠ WARNING

There is no rollover protection when the roll bar is in the down position.

- **Lower the roll bar only when absolutely necessary.**
- **Do not wear the seat belt when the roll bar is in the down position.**
- **Drive slowly and carefully.**
- **Raise the roll bar as soon as clearance permits.**
- **Check carefully for overhead clearances (i.e., branches, doorways, electrical wires) before driving under any objects and do not contact them.**

Lowering the Roll Bar

Important: **Lower the roll bar only when absolutely necessary.**

1. To lower the roll bar, apply forward pressure to the upper part of the roll bar.
2. Pull both knobs out and rotate them 90 degrees so they are not engaged (Figure 8).
3. Lower the roll bar to the down position (Figure 8).

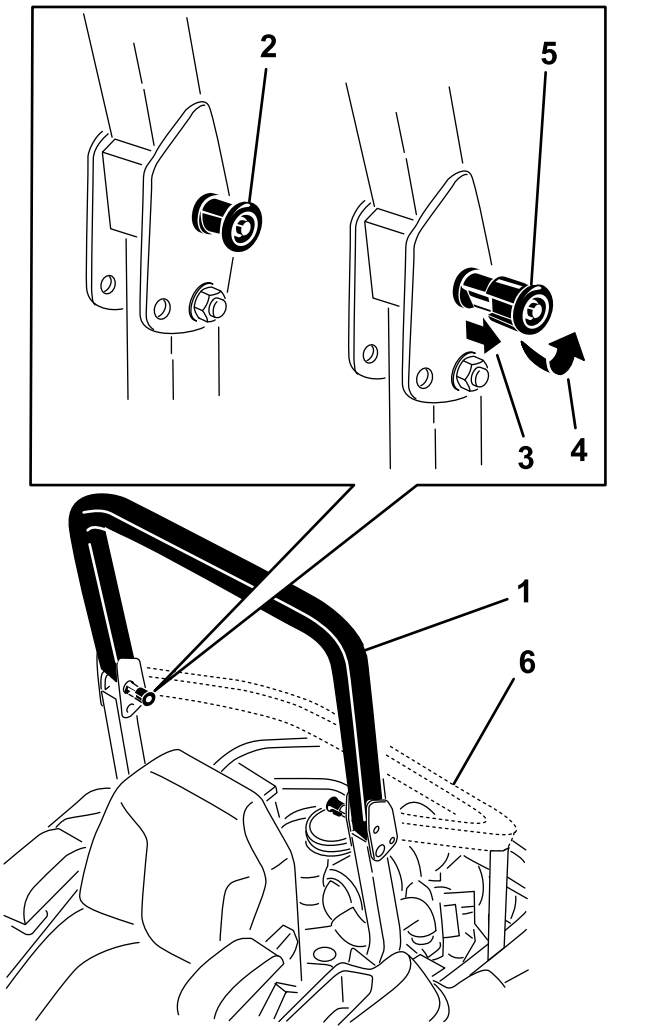

g228804

Figure 8

1. Roll bar in the upright position
2. ROPS knob in the latched position
3. Pull the ROPS knob out.
4. Rotate the ROPS knob 90 degrees.
5. ROPS knob in the unlatched position
6. Roll bar in the folded position

Raising the Roll Bar

Important: **Always use the seat belt with the roll bar in the raised position.**

1. Raise the roll bar to the operating position and rotate the knobs until they move partially into the grooves (Figure 8).
2. Raise the roll bar to the full upright position while pushing on the upper roll bar so that the pins snap into position when the holes align with the pins (Figure 8).
3. Push on the roll bar and ensure that both pins are engaged.

Using the Safety-Interlock System

⚠ WARNING

If the safety-interlock switches are disconnected or damaged, the machine could operate unexpectedly, causing personal injury.

- **Do not tamper with the interlock switches.**
- **Check the operation of the interlock switches daily and replace any damaged switches before operating the machine.**

Understanding the Safety-Interlock System

The safety-interlock system is designed to prevent the engine from starting unless the following occurs:

- The parking brake is engaged.
- The blade-control switch (PTO) is disengaged.
- The motion-control levers are in the NEUTRAL-LOCK position.

The safety-interlock system also is designed to shut off the engine when the motion-control levers are moved from the NEUTRAL-LOCK position with the parking brake engaged or if you rise from the seat when the PTO is engaged.

The hour meter has indicators to notify the user when the interlock component is in the correct position. When the component is in the correct position, an indicator displays on the screen.

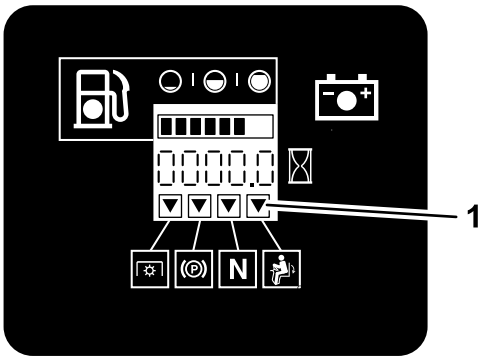

G009181

g009181

Figure 9

1. Indicators display when the interlock components are in the correct position.

Testing the Safety-Interlock System

Service Interval: Before each use or daily

Test the safety-interlock system before you use the machine each time. If the safety system does not operate as described below, have an Authorized Service Dealer repair the safety system immediately.

1. Sit on the seat, engage the parking brake, and move the blade-control switch (PTO) to the ON position. Try starting the engine; the engine should not start.
2. Sit on the seat, engage the parking brake, and move the blade-control switch (PTO) to the OFF position. Move either motion-control lever out of the NEUTRAL-LOCK position. Try starting the engine; the engine should not start. Repeat for the other control lever.
3. Sit on the seat, engage the parking brake, move the blade-control switch (PTO) to the OFF position, and move the motion-control levers to the NEUTRAL-LOCK position. Now start the engine. While the engine is running, disengage the parking brake, engage the blade-control switch (PTO), and rise slightly from the seat; the engine should shut off.
4. Sit on the seat, engage the parking brake, move the blade-control switch (PTO) to the OFF position, and move the motion-control levers to the NEUTRAL-LOCK position. Now start the engine. While the engine is running, center either motion control and move (forward or reverse); the engine should shut off. Repeat for other motion control.
5. Sit on the seat, disengage the parking brake, move the blade-control switch (PTO) to the OFF position, and move the motion-control levers to the NEUTRAL-LOCK position. Try starting the engine; the engine should not start.

Positioning the Seat

The seat can move forward and backward. Position the seat where you have the best control of the machine and are most comfortable (Figure 10).

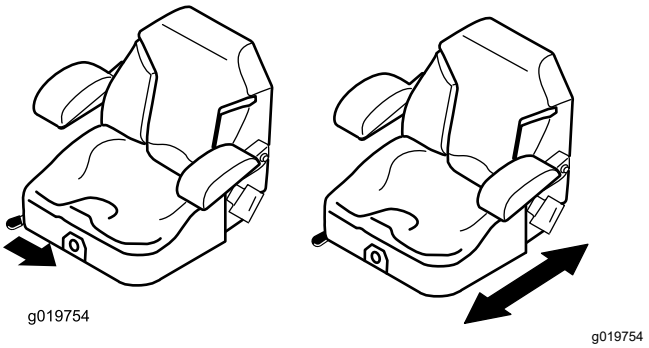

Figure 10

Unlatching the Seat

To unlatch the seat, push the seat latch forward (Figure 11).

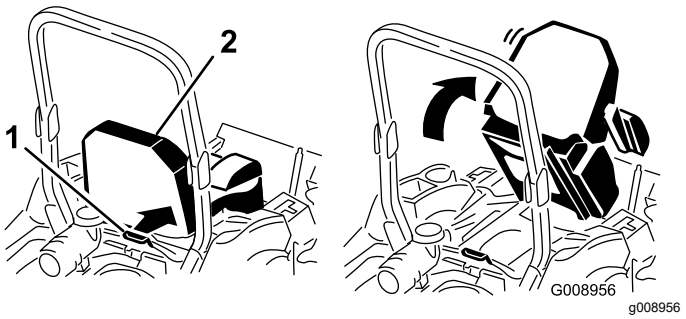

Figure 11

1. Seat latch
2. Seat

Changing the Seat Suspension

The seat is adjustable to provide a smooth and comfortable ride. Position the seat where you are most comfortable.

To adjust it, turn the knob in front either direction to provide the best comfort (Figure 12).

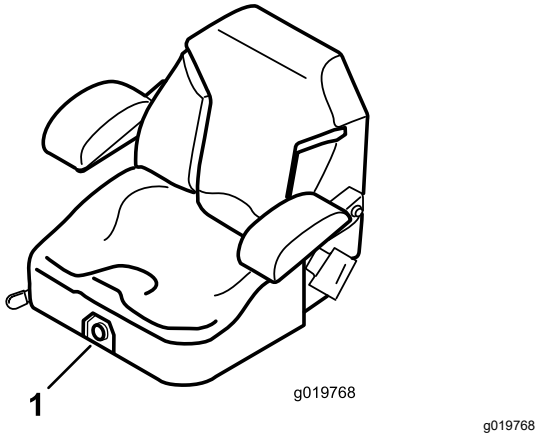

g019768

Figure 12

1. Seat-suspension knob

During Operation

During Operation Safety

General Safety

- The owner/operator can prevent and is responsible for accidents that may cause personal injury or property damage.
- Use your full attention while operating the machine. Do not engage in any activity that causes distractions; otherwise, injury or property damage may occur.
- Do not operate the machine while ill, tired, or under the influence of alcohol or drugs.
- Contacting the blade can result in serious personal injury. Shut off the engine, remove the key, and wait for all moving parts to stop before leaving the operating position. When you turn the key to the OFF position, the engine should shut off and the blade should stop. If not, stop using your machine immediately and contact an Authorized Service Dealer.
- Operate the machine only in good visibility and appropriate weather conditions. Do not operate the machine when there is the risk of lightning.
- Keep your hands and feet away from the cutting units. Keep clear of the discharge opening.
- Do not mow with the discharge deflector raised, removed, or altered unless there is a grass-collection system or mulch kit in place and working properly.
- Do not mow in reverse unless it is absolutely necessary. Always look down and behind you before moving the machine in reverse.
- Use extreme care when approaching blind corners, shrubs, trees, or other objects that may block your view.
- Stop the blades whenever you are not mowing.
- If the machine strikes an object or starts to vibrate, immediately shut off the engine, remove the key (if equipped), and wait for all moving parts to stop before examining the machine for damage. Make all necessary repairs before resuming operation.
- Slow down and use caution when making turns and crossing roads and sidewalks with the machine. Always yield the right-of-way.
- Before you leave the operating position, do the following:
  - Park the machine on a level surface.
  - Disengage the power takeoff and lower the attachments.
  - Engage the parking brake.
  - Shut off the engine and remove the key.
  - Wait for all moving parts to stop.
- Operate the engine only in well-ventilated areas. Exhaust gases contain carbon monoxide, which is lethal if inhaled.
- Never leave a running machine unattended.
- Attach towed equipment to the machine only at the hitch point.
- Do not operate the machine unless all guards and safety devices, such as the deflectors and the entire grass catcher, are in place and functioning properly. Replace worn or deteriorated parts when necessary.
- Use only accessories and attachments approved by Toro.
- This machine produces sound levels in excess of 85 dBA at the operator’s ear and can cause hearing loss through extended periods of exposure.

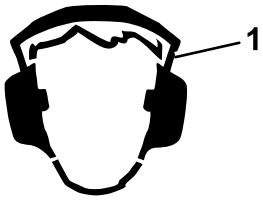

g229846

Figure 13

1. Wear hearing protection.

- Clean grass and debris from the cutting unit, drives, muffler, and engine to help prevent fires.
- Start the engine with your feet well away from the blades.
- Be aware of the mower discharge path and direct the discharge away from others. Avoid discharging material against a wall or obstruction because the material may ricochet back toward you.
- Stop the blades, slow down the machine, and use caution when crossing surfaces other than grass or when transporting the machine to and from the operating area.
- Do not change the engine governor speed or overspeed the engine.
- Children are often attracted to the machine and the mowing activity. Never assume that children will remain where you last saw them.
- Keep children out of the operating area and under the watchful care of a responsible adult other than the operator.
- Be alert and shut off the machine if children enter the operating area.
- Before backing up or turning the machine, look down and all around for small children.
- Do not carry children on the machine, even when the blades are not moving. Children could fall off and be seriously injured or prevent you from safely operating the machine. Children who have been given rides in the past could appear in the operating area without warning and be run over or backed over by the machine.

Rollover Protection System (ROPS) Safety

- The ROPS is an integral safety device. Do not remove any of the ROPS components from the machine.
- Ensure that the seat belt is attached and that you can release it quickly in an emergency.
- Keep the roll bar in the fully raised and locked position and always wear your seat belt whenever the roll bar is up.
- Check carefully for overhead objects before you drive under them, and do not contact them.
- Replace damaged ROPS components. Do not repair or alter them.
- There is no rollover protection when the roll bar is down.
- Wheels dropping over edges, over steep banks, or into water can cause a rollover, which may result in serious injury or death.
- Do not wear the seat belt when the roll bar is down.
- Lower the roll bar only when absolutely necessary; raise it as soon as clearance permits.
- In the event of a rollover, take the machine to an Authorized Service Dealer to inspect the ROPS.
- Use only Toro approved accessories and attachments for the ROPS.

Slope Safety

- Slopes are a major factor related to loss of control and rollover accidents, which can result in severe injury or death. The operator is responsible for safe slope operation. Operating the machine on any slope requires extra caution. Before using the machine on a slope, do the following:
  - Review and understand the slope instructions in the manual and on the machine.
  - Use an angle indicator to determine the approximate slope angle of the area.
  - Never operate on slopes greater than 15°.
  - Evaluate the site conditions of the day to determine if the slope is safe for machine operation. Use common sense and good judgment when performing this evaluation. Changes in the terrain, such as moisture, can quickly affect the operation of the machine on a slope.
- Identify hazards at the base of the slope. Do not operate the machine near drop-offs, ditches, embankments, water, or other hazards. The machine could suddenly roll over if a wheel goes over the edge or the edge collapses. Keep a safe distance (twice the width of the machine) between the machine and any hazard. Use a walk-behind machine or a hand trimmer to mow the grass in these areas.
- Avoid starting, stopping, or turning the machine on slopes. Avoid making sudden changes in speed or direction; turn slowly and gradually.
- Do not operate a machine under any conditions where traction, steering, or stability is in question. Be aware that operating the machine on wet grass, across slopes, or downhill may cause the machine to lose traction. Loss of traction to the drive wheels may result in sliding and a loss of braking and steering. The machine can slide even if the drive wheels are stopped.

- Remove or mark obstacles such as ditches, holes, ruts, bumps, rocks, or other hidden hazards. Tall grass can hide obstacles. Uneven terrain could overturn the machine.
- Use extra care while operating with accessories or attachments, such as grass-collection systems. These can change the stability of the machine and cause a loss of control. Follow directions for counterweights.
- If possible, keep the deck lowered to the ground while operating on slopes. Raising the deck while operating on slopes can cause the machine to become unstable.

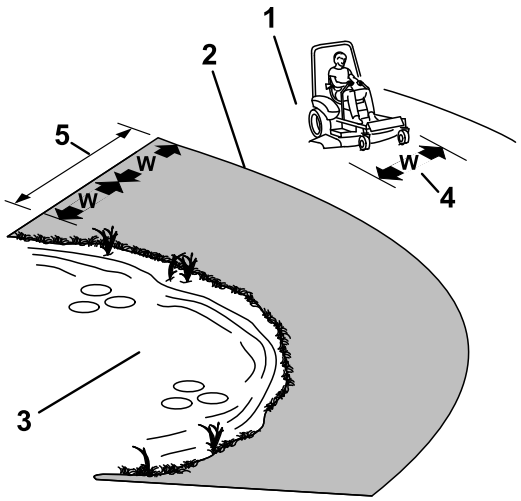

g221745

Figure 14

1. Safe Zone—use the machine here on slopes less than 15° or flat areas.
2. Danger Zone—use a walk-behind mower and/or a hand trimmer on slopes greater than 15° and near drop-offs or water.
3. Water
4. W = Width of the machine
5. Keep a safe distance (twice the width of the machine) between the machine and any hazard.

Operating the Parking Brake

Always engage the parking brake when you stop the machine or leave it unattended.

Engaging the Parking Brake

Park the machine on a level surface.

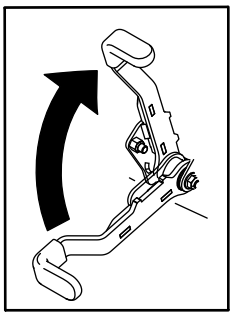

g027334

g027334

Figure 15

Disengaging the Parking Brake

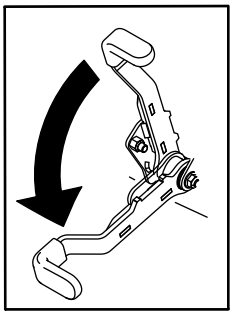

g027335

g027335

Figure 16

Operating the Mower Blade-Control Switch (PTO)

The blade-control switch (PTO) starts and stops the mower blades and any powered attachments.

Engaging the Blade-Control Switch (PTO)

Note: Engaging the blade-control switch (PTO) with the throttle position at half or less causes excessive wear to the drive belts.

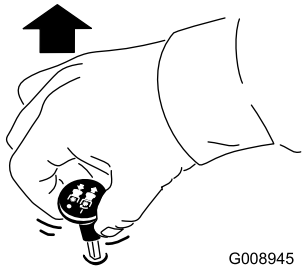

g008945

Figure 17

Disengaging the Blade-Control Switch (PTO)

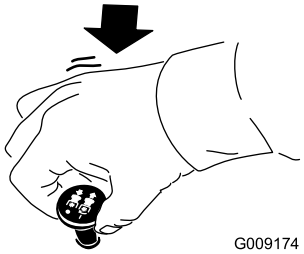

g009174

Figure 18

Starting the Engine

Important: **Do not engage the starter for more than 5 seconds at a time. If the engine fails to start, wait 15 seconds between attempts. Failure to follow these instructions can burn out the starter motor.**

Note: You may need multiple attempts to start the engine the first time after adding fuel to an empty fuel system.

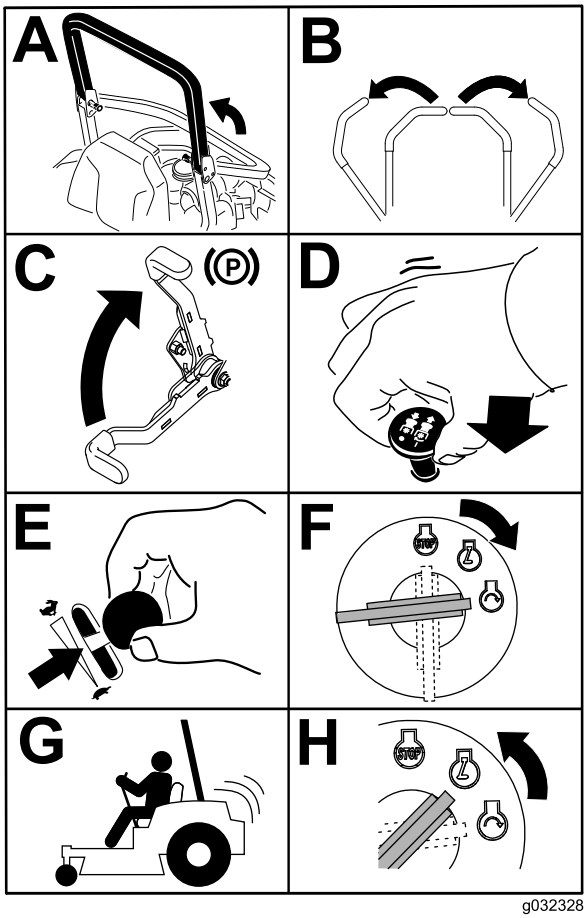

g032328

g032328

Figure 19

Shutting Off the Engine

⚠ CAUTION

Children or bystanders may be injured if they move or attempt to operate the machine while it is unattended.

Always remove the key and engage the parking brake when leaving the machine unattended.

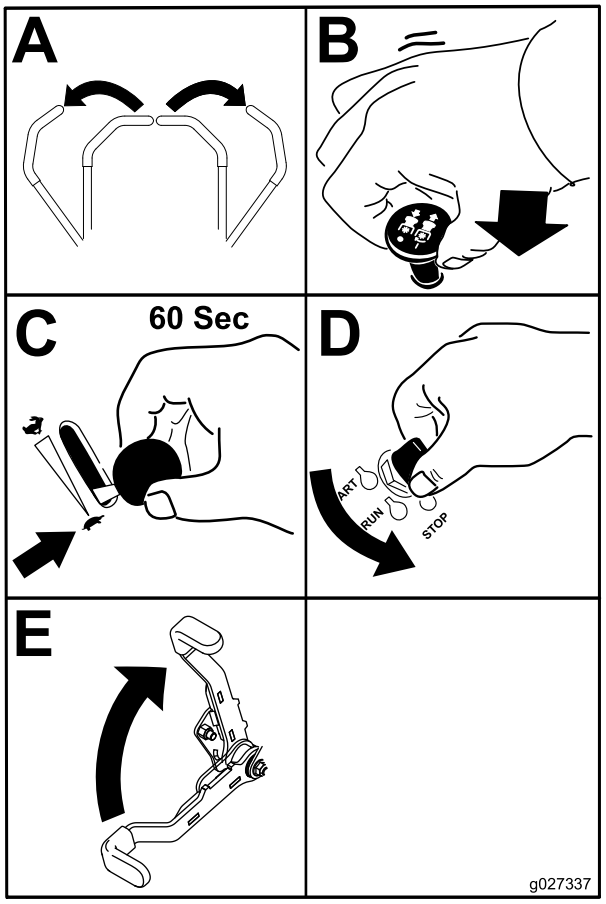

g027337

Figure 20

Important: **Make sure that the fuel-shutoff valve is closed before transporting or storing the machine, as fuel leakage may occur. Engage the parking brake before transporting. Make sure that you remove the key as the fuel pump may run and cause the battery to lose charge.**

Using the Motion-Control Levers

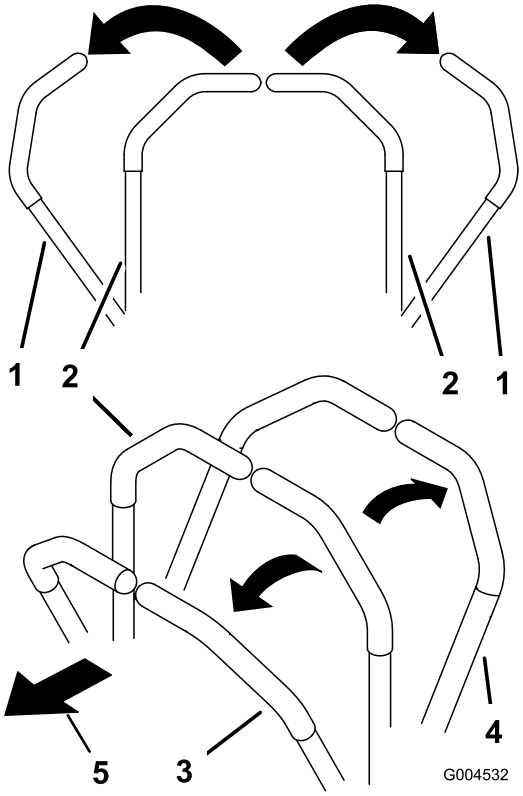

g004532

Figure 21

1. Motion-control levers—NEUTRAL-LOCK position
2. Center, unlocked position
3. Forward
4. Reverse
5. Front of the machine

Driving the Machine

The drive wheels turn independently, powered by hydraulic motors on each axle. You can turn 1 side in reverse while you turn the other forward, causing the machine to spin rather than turn. This greatly improves the machine maneuverability but may require some time for you to adapt to how it moves.

The throttle control regulates the engine speed as measured in rpm (revolutions per minute). Place the throttle control in the FAST position for best performance. Always operate in the full throttle position when mowing.

⚠ WARNING

The machine can spin very rapidly. You may lose control of the machine and cause personal injury or damage to the machine.

- **Use caution when making turns.**
- **Slow the machine down before making sharp turns.**

Driving Forward

Note: The engine shuts off when you move the traction-control with the parking brake engaged.

To stop the machine, pull the motion-control levers to the NEUTRAL position.

1. Disengage the parking brake.
2. Move the motion-control levers to the center, unlocked position.
3. To go forward, slowly push the motion-control levers forward (Figure 22).

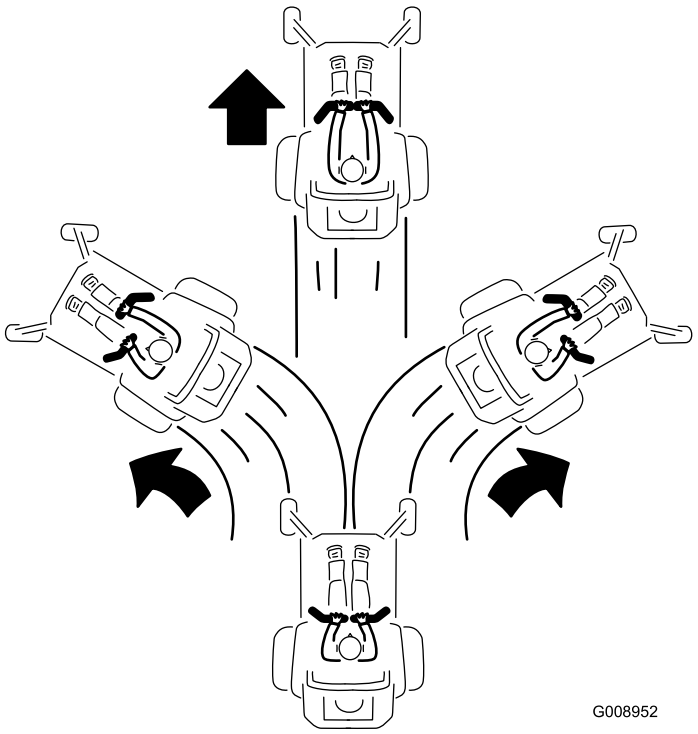

Figure 22

Driving in Reverse

1. Move the motion-control levers to the center, unlocked position.
2. To go in reverse, slowly pull the motion-control levers rearward (Figure 23).

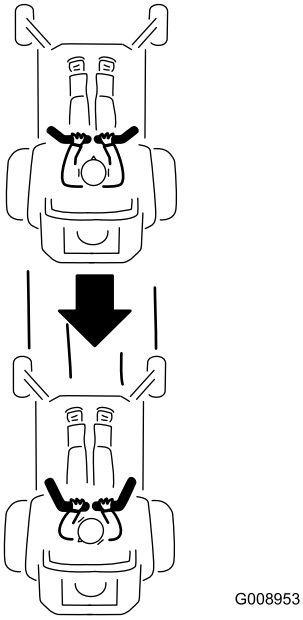

Figure 23

Using the Side Discharge

The mower has a hinged grass deflector that disperses clippings to the side and down toward the turf.

⚠ DANGER

Without a grass deflector, discharge cover, or a complete grass-catcher assembly mounted in place, you and others are exposed to blade contact and thrown debris. Contact with rotating mower blade(s) and thrown debris will cause injury or death.

- **Never remove the grass deflector from the mower deck because the grass deflector routes material down toward the turf. If the grass deflector is ever damaged, replace it immediately.**
- **Never put your hands or feet under the mower deck.**
- **Never try to clear the discharge area or mower blades unless you move the blade-control switch (PTO) to the OFF position, rotate the key switch to the OFF position, and remove the key from the key switch.**
- **Make sure that the grass deflector is in the down position.**

Adjusting the Height of Cut

Using the Transport Lock

The transport lock has 2 positions, and is used with the deck-lift pedal. There is a LOCK position and an UNLOCK position for the transport position of the mower deck (Figure 24).

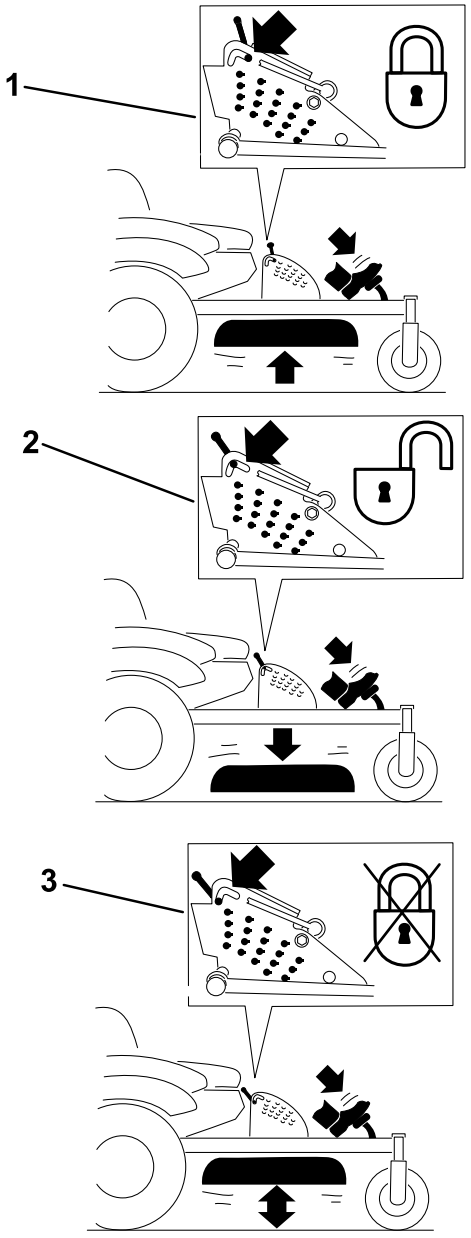

Figure 24

Transport-Lock Positions

1. Transport lock knob
2. LOCK position—The mower deck locks into the transport position.
3. UNLOCK position—The mower deck does not lock into the transport position.

Adjusting the Height-of-Cut Pin

The height-of-cut is adjusted from 25 to 140 mm (1 to 5-1/2 inches) in 6 mm (1/4 inch) increments by relocating the clevis pin into different hole locations.

1. Move the transport lock to the lock position.
2. Push on the deck-lift pedal with your foot, and raise the mower deck to the transport position (also the 140 mm (5-1/2 inch) cutting height position) as shown in Figure 25.
3. To adjust, rotate the pin 90 degrees and remove the pin from the height-of-cut bracket (Figure 25).
4. Select a hole in the height-of-cut bracket corresponding to the height-of-cut desired, and insert the pin (Figure 25).
5. Push on the deck lift, pull back on the transport lock, and slowly lower the mower deck.

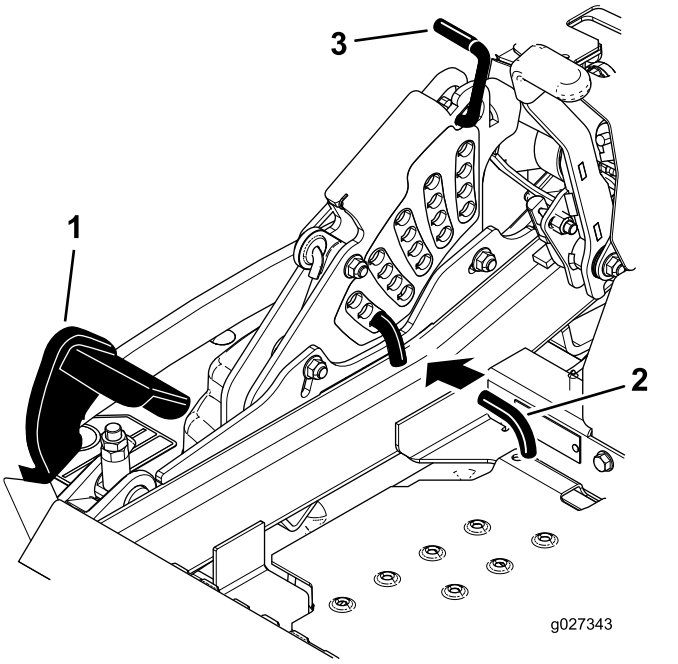

g027343

Figure 25

1. Deck-lift pedal
2. Cut-of-height pin
3. Transport lock

Adjusting the Anti-Scalp Rollers

Whenever you change the height-of-cut, adjust the height of the anti-scalp rollers.

1. Park the machine on a level surface, disengage the blade-control switch, and engage the parking brake.
2. Shut off the engine, remove the key, and wait for all moving parts to stop before leaving the operating position.
3. Adjust the anti-scalp rollers as shown in Figure 26, Figure 27, and Figure 28.

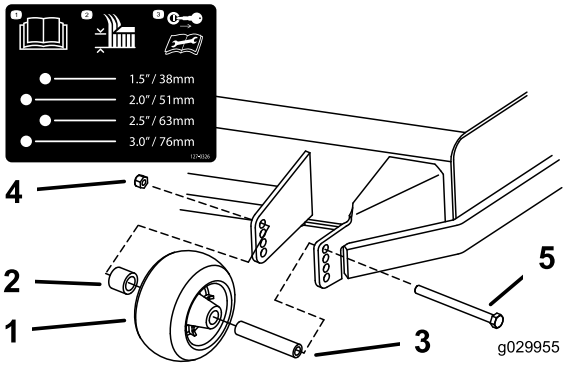

g029955

Figure 26

1. Anti-scalp roller
2. Spacer
3. Bushing
4. Flange nut
5. Bolt

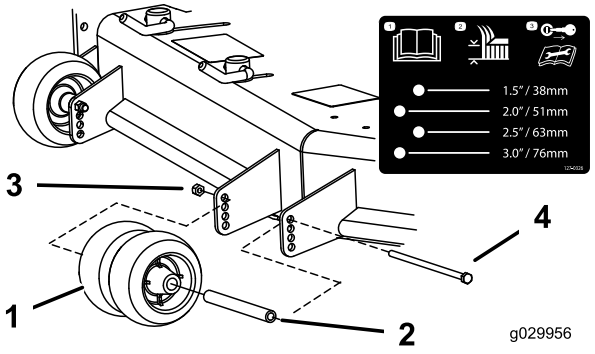

g029956

Figure 27

1. Anti-scalp roller
2. Bushing
3. Flange nut
4. Bolt

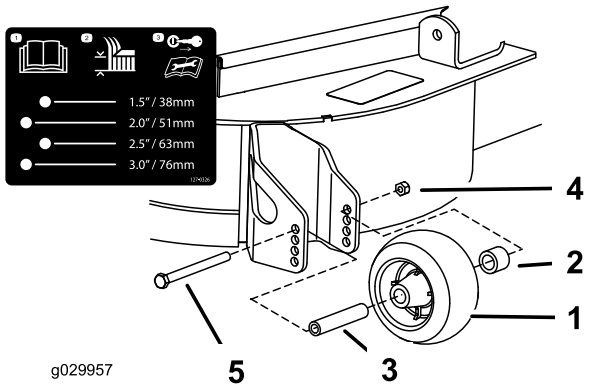

g029957

Figure 28

1. Anti-scalp roller
2. Spacer
3. Bushing
4. Flange nut
5. Bolt

Adjusting the Flow Baffle Knob

This procedure applies only to machines with the flow baffle knob. Certain models have nuts and bolts instead of the flow baffle knob that you can adjust the same way.

You can adjust the mower discharge flow for different types of mowing conditions. Position the knob and baffle to give the best quality of cut.

1. Park the machine on a level surface, disengage the blade-control switch, and engage the parking brake.
2. Shut off the engine, remove the key, and wait for all moving parts to stop before leaving the operating position.
3. Loosen the knob.
4. Slide the knob to the desired position.
5. Tighten the knob.

Positioning the Flow Baffle

The following figures are recommendations only. Adjustments vary by grass type, moisture content, and the height of the grass.

Note: If the engine power draws down and the mower ground speed is the same, open the baffle.

Position A

This is the fully-rear position. The suggested use for this position is as follows:

- Short, light grass mowing conditions
- Dry conditions
- Smaller grass clippings
- Propels grass clippings farther away from the mower

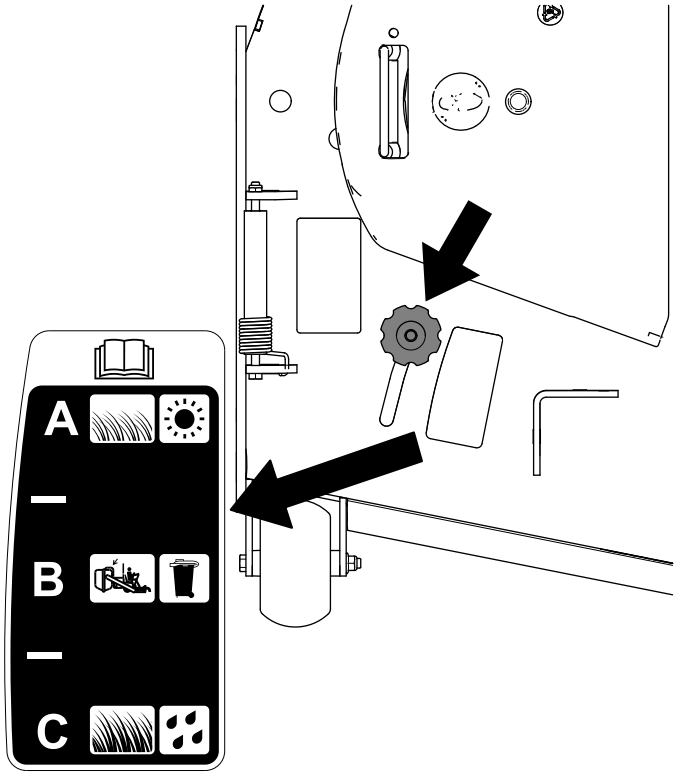

g295810

Figure 29

Position B

Use this position when bagging. Always align it with the blower opening.

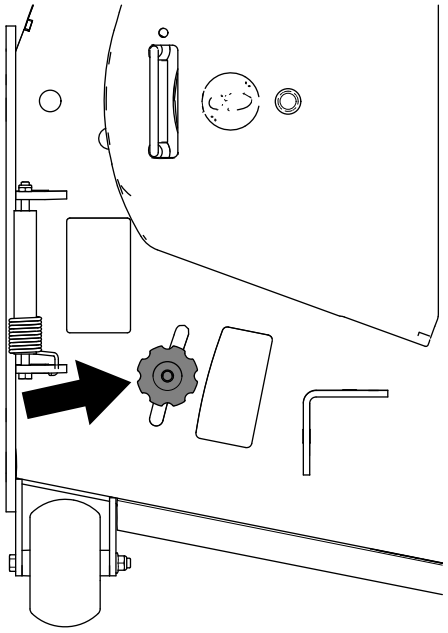

g295811

Figure 30

Position C

This is the fully-forward position. The suggested use for this position is as follows:

- Tall, dense grass mowing conditions
- Wet conditions
- Lowers the engine-power consumption
- Allows increased ground speed in heavy conditions

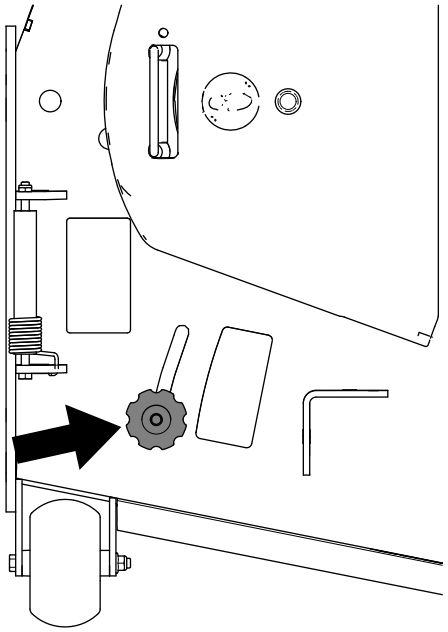

g295812

Figure 31

Operating Tips

Using the Fast Throttle Setting

For best mowing and maximum air circulation, operate the engine at the FAST position. Air is required to thoroughly cut grass clippings, so do not set the height-of-cut so low as to totally surround the mower deck in uncut grass. Always try to have 1 side of the mower deck free from uncut grass, which allows air to be drawn into the mower deck.

Cutting a Lawn for the First Time

Cut grass slightly longer than normal to ensure that the cutting height of the mower deck does not scalp any uneven ground. However, the cutting height used in the past is generally the best one to use. When cutting grass longer than 15 cm (6 inches) tall, you may want to cut the lawn twice to ensure an acceptable quality of cut.

Cutting a Third of the Grass Blade

It is best to cut only about a third of the grass blade. Cutting more than that is not recommended unless grass is sparse, or it is late fall when grass grows more slowly.

Alternating the Mowing Direction

Alternate the mowing direction to keep the grass standing straight. This also helps disperse clippings, which enhances decomposition and fertilization.

Mowing at Correct Intervals

Grass grows at different rates at different times of the year. To maintain the same cutting height, mow more often in early spring. As the grass growth rate slows in mid summer, mow less frequently. If you cannot mow for an extended period, first mow at a high cutting height, then mow again 2 days later at a lower height setting.

Using a Slower Cutting Speed

To improve cut quality, use a slower ground speed in certain conditions.

Avoiding Cutting Too Low

When mowing uneven turf, raise the cutting height to avoid scalping the turf.

Stopping the Machine

If you must stop the forward motion of the machine while mowing, a clump of grass clippings may drop onto your lawn. To avoid this, move onto a previously cut area with the blades engaged or you can disengage the mower deck while moving forward.

Keeping the Underside of the Mower Deck Clean

Clean clippings and dirt from the underside of the mower deck after each use. If grass and dirt build up inside the mower deck, cutting quality will eventually become unsatisfactory.

Maintaining the Blade(s)

Maintain a sharp blade throughout the cutting season because a sharp blade cuts cleanly without tearing or shredding the grass blades. Tearing and shredding turns grass brown at the edges, which slows growth and increases the chance of disease. Check the mower blades after each use for sharpness, and for any wear or damage. File down any nicks and sharpen the blades as necessary. If a blade is damaged or worn, replace it immediately with a genuine Toro replacement blade.

After Operation

After Operation Safety

General Safety

- Shut off the engine, remove the key, and wait for all moving parts to stop before leaving the operator's position. Allow the machine to cool before servicing, adjusting, fueling, cleaning, or storing it.
- Clean grass and debris from the cutting unit, muffler, drives, grass catcher, and engine compartment to help prevent fires. Clean up oil or fuel spills.
- Shut off the fuel and remove the key before storing or transporting the machine.

Using the Fuel-Shutoff Valve

The fuel-shutoff valve is located under the seat. Move the seat forward to access it.

Close the fuel-shutoff valve for transport, maintenance, and storage.

Ensure that the fuel-shutoff valve is open when starting the engine.

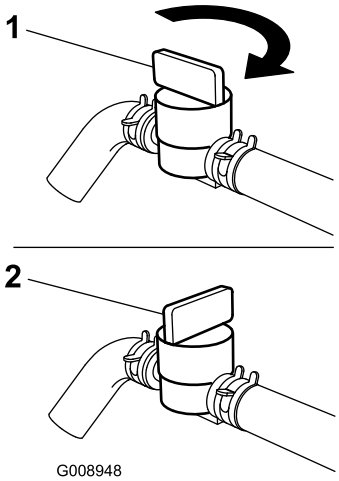

Figure 32

1. ON position
2. OFF position

Using the Drive-Wheel-Release Valves

⚠ WARNING

Hands may become entangled in the rotating drive components below the engine deck, which could result in serious injury.

Shut off the engine, remove the key, and allow all moving parts to stop before accessing the drive-wheel-release valves.

⚠ WARNING

The engine and hydraulic-drive units can become very hot. Touching a hot engine or hydraulic-drive units can cause severe burns.

Allow the engine and hydraulic-drive units to cool completely before accessing the drive-wheel-release valves.

The drive-wheel-release valves are located in the back of each hydraulic-drive unit, under the seat.

Note: Make sure that the release valves are in the fully horizontal position when operating the machine; otherwise, severe damage to the hydraulic system can occur.

1. Park the machine on a level surface, disengage the blade-control switch, and engage the parking brake.
2. Shut off the engine, remove the key, and wait for all moving parts to stop before leaving the operating position.
3. Rotate the release-valve levers vertically to push the machine (Figure 33).

   Note: This allows hydraulic fluid to bypass the pump, enabling the wheels to turn.
4. Disengage the parking brake before pushing the machine.

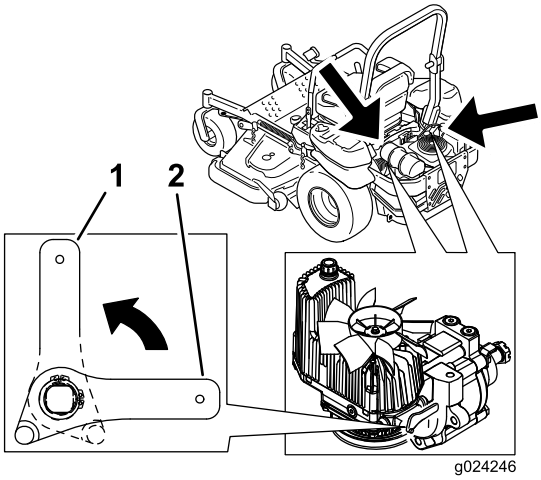

g024246

Figure 33

1. Vertical to push the machine
2. Horizontal to run the machine

5. Rotate the release valve levers horizontally to run the machine (Figure 33).

Transporting the Machine

Use a heavy-duty trailer or truck to transport the machine. Use a full-width ramp. Ensure that the trailer or truck has all the necessary brakes, lighting, and marking as required by law. Please carefully read all the safety instructions. Knowing this information could help you or bystanders avoid injury. Refer to your local ordinances for trailer and tie-down requirements.

⚠ WARNING

Driving on the street or roadway without turn signals, lights, reflective markings, or a slow-moving-vehicle emblem is dangerous and can lead to accidents, causing personal injury.

Do not drive the machine on a public street or roadway.

Selecting a Trailer

⚠ WARNING

Loading a machine onto a trailer or truck increases the possibility of tip-over and could cause serious injury or death (Figure 34).

- **Use only a full-width ramp; do not use individual ramps for each side of the machine.**
- **Do not exceed a 15-degree angle between the ramp and the ground or between the ramp and the trailer or truck.**
- **Ensure that the length of the ramp is at least 4 times as long as the height of the trailer or truck bed to the ground. This ensures that the ramp angle does not exceed 15 degrees on flat ground.**

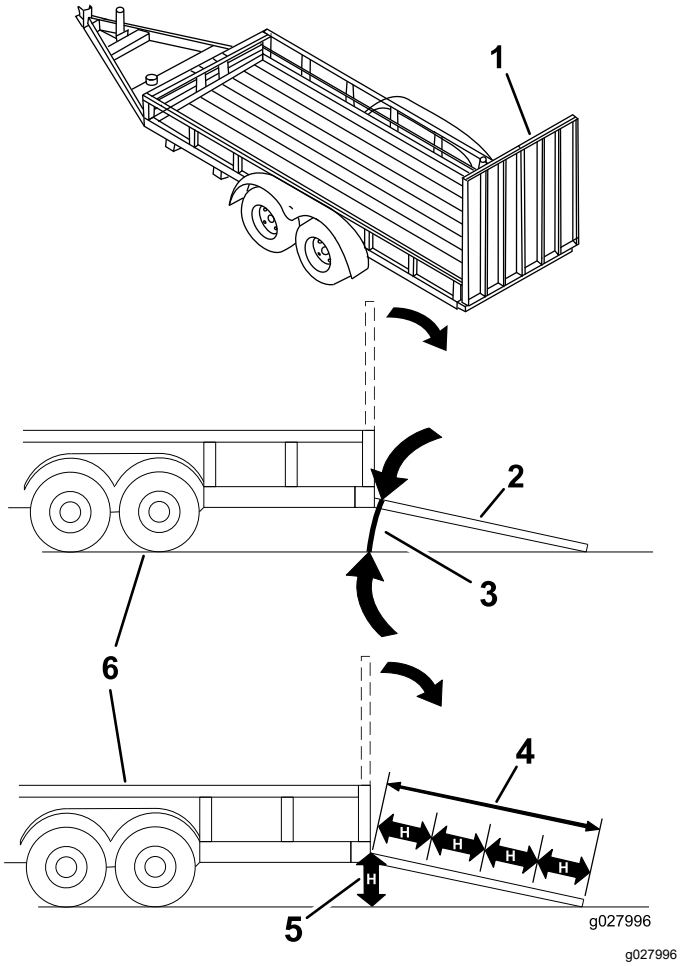

Figure 34

1. Full-width ramp in stowed position
2. Side view of full-width ramp in loading position
3. Not greater than 15 degrees
4. Ramp is at least 4 times as long as the height of the trailer or truck bed to the ground
5. H=height of the trailer or truck bed to the ground
6. Trailer

Loading the Machine

⚠ WARNING

Loading a machine onto a trailer or truck increases the possibility of tip-over and could cause serious injury or death.

- **Use extreme caution when operating a machine on a ramp.**
- **Back the machine up the ramp and drive it forward down the ramp.**
- **Avoid sudden acceleration or deceleration while driving the machine on a ramp as this could cause a loss of control or a tip-over situation.**

1. If using a trailer, connect it to the towing vehicle and connect the safety chains.
2. If applicable, connect the trailer brakes and lights.
3. Lower the ramp, ensuring that the angle between the ramp and the ground does not exceed 15 degrees (Figure 34).
4. Back the machine up the ramp (Figure 35).

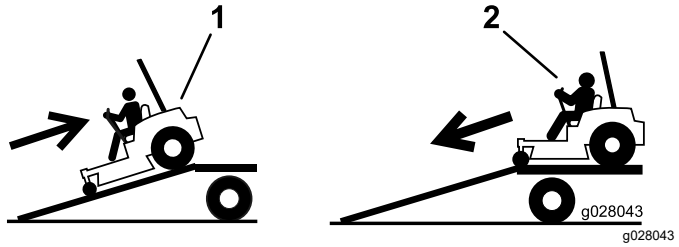

Figure 35

1. Back the machine up the ramp.
2. Drive the machine forward down the ramp.

5. Shut off the engine, remove the key, and engage the parking brake.
6. Tie down the machine near the front caster wheels and the rear frame with straps, chains, cable, or ropes (Figure 36). Refer to local regulations for tie-down requirements.

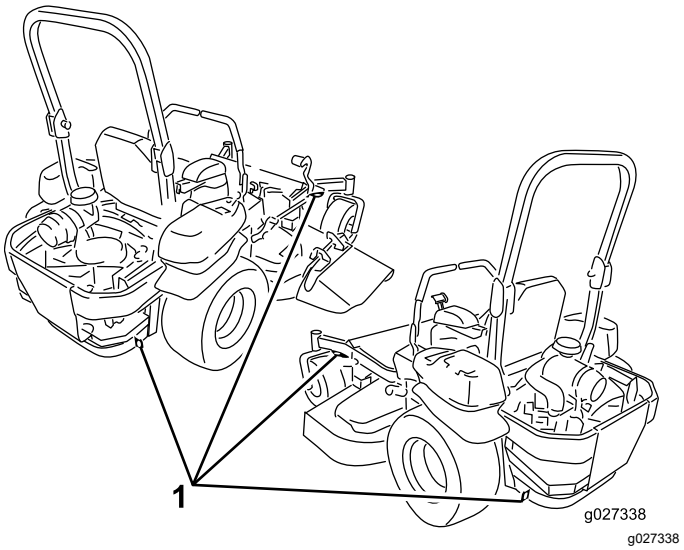

Figure 36

1. Tie-down points

Unloading the Machine

1. Lower the ramp, ensuring that the angle between the ramp and the ground does not exceed 15 degrees (Figure 34).
2. Drive the machine forward down the ramp (Figure 35).

Maintenance

Determine the left and right sides of the machine from the normal operating position.

Maintenance Safety

- If you leave the key in the switch, someone could accidently start the engine and seriously injure you or other bystanders. Remove the key from the switch before you perform any maintenance.
- Before you leave the operator's position, do the following:
  - Park the machine on a level surface.
  - Disengage the drives.
  - Engage the parking brake.
  - Shut off the engine and remove the key.
  - Allow machine components to cool before performing maintenance.
- Do not allow untrained personnel to service the machine.
- Keep your hands and feet away from moving parts or hot surfaces. If possible, do not make adjustments with the engine running.
- Carefully release pressure from components with stored energy.
- Check the parking brake operation frequently. Adjust and service it as required.
- Never tamper with safety devices. Check their proper operation regularly.
- Clean grass and debris from the cutting unit, muffler, drives, grass catcher, and engine compartment to prevent fires.
- Clean up oil or fuel spills and remove fuel-soaked debris.
- Do not rely on hydraulic or mechanical jacks to support the machine; support the machine with jack stands whenever you raise the machine.
- Keep all parts in good working condition and all hardware tightened, especially the blade-attachment hardware. Replace all worn or damaged decals.
- Disconnect the battery before repairing the machine. Disconnect the negative terminal first and the positive last. Connect the positive terminal first and the negative last.
- To ensure optimum performance, use only genuine Toro replacement parts and accessories. Replacement parts and accessories made by other manufacturers could be dangerous, and such use could void the product warranty.

Recommended Maintenance Schedule(s)

Maintenance Service Interval	Maintenance Procedure
After the first 5 hours	• Change the engine oil.
After the first 100 hours	• Check the wheel lug-nut torque. • Check the wheel-hub slotted-nut torque. • Adjust the parking brake.
After the first 250 hours	• Change the hydraulic filters and hydraulic fluid.
Before each use or daily	• Check the safety-interlock system. • Check the air cleaner for dirty, loose or damaged parts. • Check the engine-oil level. • Check the seat belt. • Check the roll bar knobs. • Clean the engine screen and the oil cooler. • Check and clean the hydraulic-unit shrouds. • Inspect the blades.
After each use	• Clean the mower deck.
Every 50 hours	• Check the spark arrester (if equipped). • Check the tire pressure • Inspect the belts for cracks and wear. • Check the hydraulic-fluid level.

Maintenance Service Interval	Maintenance Procedure
Every 100 hours	• Lubricate the mower deck-lift pivots. • Change the engine oil and oil filter (more often in dirty or dusty conditions). • Check and clean engine-cooling fins and shrouds.
Every 150 hours	• Replace the fuel filter (more often in dirty or dusty conditions).
Every 200 hours	• Check the spark plug(s).
Every 250 hours	• Service or replace the air-cleaner foam element (more often under dusty, dirty conditions). • After the initial change—change the hydraulic-system filters and fluid when using Mobil 1 15W50 fluid. (Change it more often under dirty or dusty conditions)
Every 500 hours	• Replace the air-cleaner paper element (more often under dusty, dirty conditions). • Replace the spark plug(s). • Check the wheel lug-nut torque. • Check the wheel-hub slotted-nut torque. • Adjust the caster-pivot bearing. • Adjust the parking brake. • After the initial change—change the hydraulic-system filters and fluid when using Toro® HYPR-OIL™ 500 fluid. (Change it more often under dirty or dusty conditions)
Monthly	• Check the battery charge.
Yearly	• Grease the pump-belt-idler arm. • Greasing the caster-wheel hubs.
Yearly or before storage	• Paint chipped surfaces. • Check all maintenance procedures listed above before storage.

Important: **Refer to your engine owner's manual for additional maintenance procedures.**

⚠ CAUTION

If you leave the key in the switch, someone could accidently start the engine and seriously injure you or other bystanders.

Shut off the engine and remove the key from the switch before you perform any maintenance.

Pre-Maintenance Procedures

Removing or Installing the Floor Pan

⚠ WARNING

You can be seriously injured if you operate the machine with the floor pan removed, or if you do not completely remove the floor pan to perform maintenance on components beneath it.

Do not operate the machine with the floor pan removed. Completely remove the floor pan before you perform maintenance underneath it.

1. To remove the floor pan, lift the floor pan and pull it out of the openings in the frame.

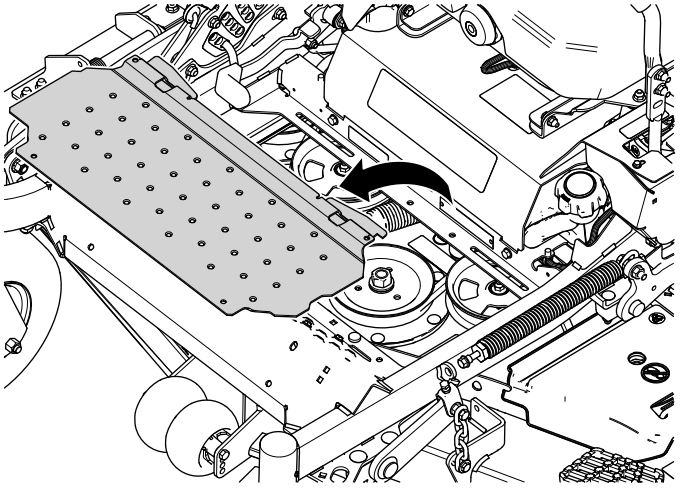

Figure 37

2. To install the floor pan, place the floor pan in the openings in the frame and lower it into place.

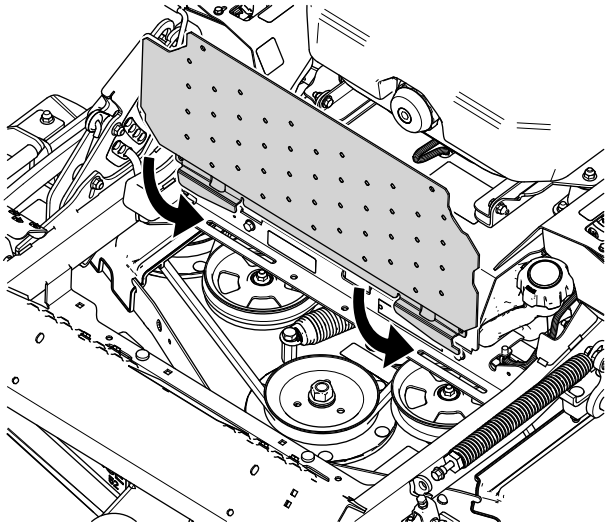

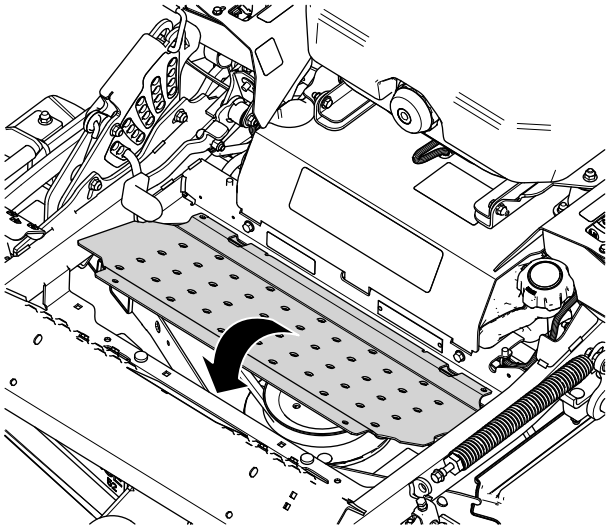

g568001

Figure 38

Lubrication

Greasing the Machine

Grease the machine more often in dirty or dusty conditions.

Grease Type: No. 2 lithium or molybdenum grease

1. Park the machine on a level surface, disengage the blade-control switch, and engage the parking brake.
2. Shut off the engine, remove the key, and wait for all moving parts to stop before leaving the operating position.
3. Clean the grease fittings with a rag.

   Note: Scrape any paint off the front of the fitting(s).
4. Connect a grease gun to the fitting.
5. Pump grease into the fittings until grease begins to ooze out of the bearings.
6. Wipe up any excess grease.

Lubricating the Mower Deck-Lift Pivots

Service Interval: Every 100 hours

Use light oil or spray lubricant to lubricate the deck-lift pivots.

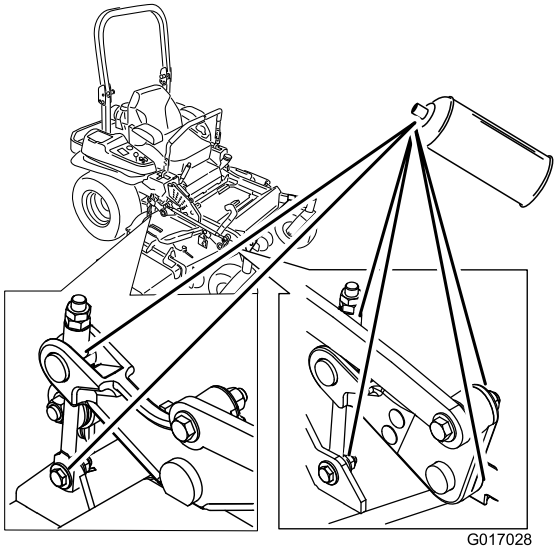

g017028

Figure 39
Machine with Side Discharge Shown

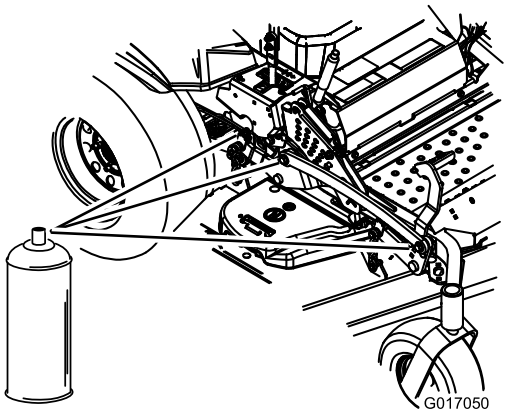

g017050

Figure 40

Greasing the Mower Deck

Service Interval: Yearly—Grease the pump-belt-idler arm.

1. Park the machine on a level surface, disengage the blade-control switch, and engage the parking brake.
2. Shut off the engine, remove the key, and wait for all moving parts to stop before leaving the operating position.
3. Remove the floor pan; refer to Removing or Installing the Floor Pan (page 33).
4. Grease the mower deck idler-pulley pivot until grease comes out the bottom (Figure 41).

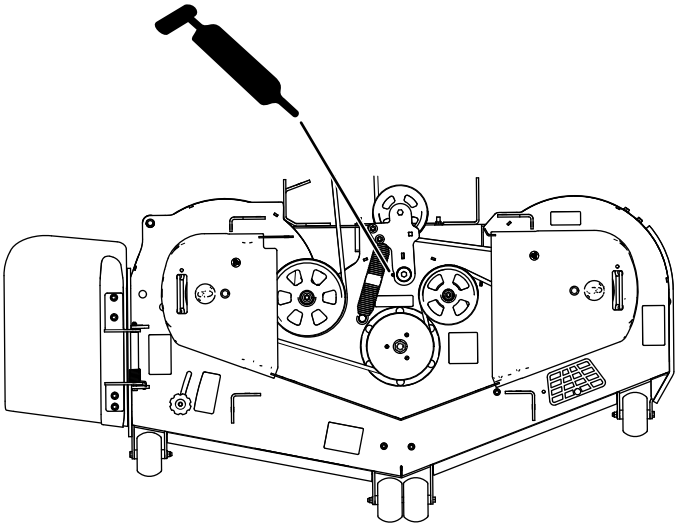

g295792

Figure 41

5. Grease the drive-belt-idler arm (Figure 41).

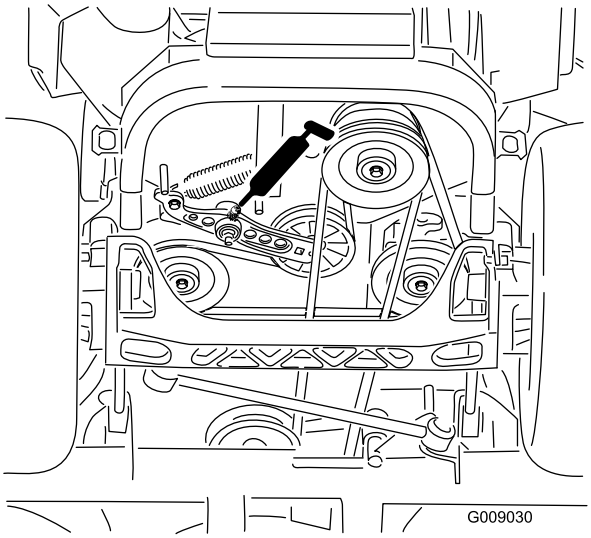

g009030

Figure 42

6. Install the floor pan; refer to Removing or Installing the Floor Pan (page 33).
7. Remove the dust cap and adjust the caster pivots.

   Note: Keep the dust cap off until greasing is done.
8. Remove the hex plug.
9. Thread a grease fitting into the hole.
10. Pump grease into the fitting until it oozes out around the top bearing.
11. Remove the grease fitting in the hole.
12. Install the hex plug and dust cap (Figure 41).

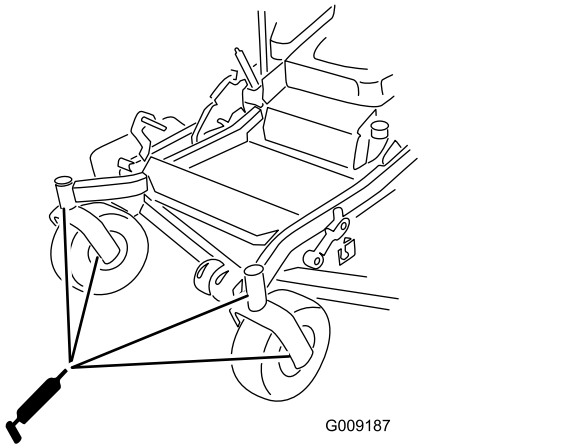

g009187

Figure 43

13. Grease the caster-wheel bearings (Figure 41).

Greasing the Caster-Wheel Hubs

Service Interval: Yearly

1. Park the machine on a level surface, disengage the blade-control switch, and engage the parking brake.
2. Shut off the engine, remove the key, and wait for all moving parts to stop before leaving the operating position.
3. Raise the mower for access.
4. Remove the caster wheel from the caster forks.
5. Remove the seal guards from the wheel hub.

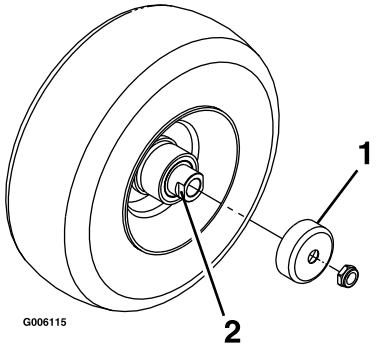

g006115

Figure 44

1. Seal guard
2. Spacer nut with wrench flats

6. Remove a spacer nut from the axle assembly in the caster wheel.

   Note: Thread-locking compound has been applied to lock the spacer nuts to the axle.
7. Remove the axle (with the other spacer nut still assembled to it) from the wheel assembly.
8. Pry out seals and inspect bearings for wear or damage and replace if necessary.
9. Pack the bearings with a general-purpose grease.
10. Insert 1 bearing and 1 new seal into the wheel.
11. If the axle assembly is missing both spacer nuts, apply a thread-locking compound to 1 spacer nut and thread it onto the axle with the wrench flats facing outward.

    Note: Do not thread the spacer nut all of the way onto the end of the axle. Leave approximately 3 mm (1/8 inch) from the outer surface of the spacer nut to the end of the axle inside the nut.
12. Insert the assembled nut and axle into the wheel on the side with the new seal and bearing.
13. With the open end of the wheel facing up, fill the area inside the wheel around the axle full of general-purpose grease.
14. Insert the second bearing and new seal into the wheel.
15. Apply a thread-locking compound to the second spacer nut, and thread it onto the axle with the wrench flats facing outward.
16. Torque the nut to 8 to 9 N·m (75 to 80 in-lb), loosen the nut, then torque it to 2 to 3 N·m (20 to 25 in-lb).

    Note: Make sure that the axle does not extend beyond either nut.
17. Install the seal guards over the wheel hub, and insert the wheel into the caster fork.

18. Install the caster bolt and tighten the nut fully.

Important: **To prevent seal and bearing damage, check the bearing adjustment often. Spin the caster tire. The tire should not spin freely (more than 1 or 2 revolutions) or have any side play. If the wheel spins freely, adjust the torque on the spacer nut until there is a slight amount of drag. Apply another layer of thread-locking compound.**

Engine Maintenance

Engine Safety

- Keep your hands, feet, face, clothing, and other body parts away from the muffler and other hot surfaces. Allow engine components to cool before performing maintenance.
- Do not change the engine governor speed or overspeed the engine.

Servicing the Engine

Important: **Refer to your engine owner's manual for additional maintenance procedures.**

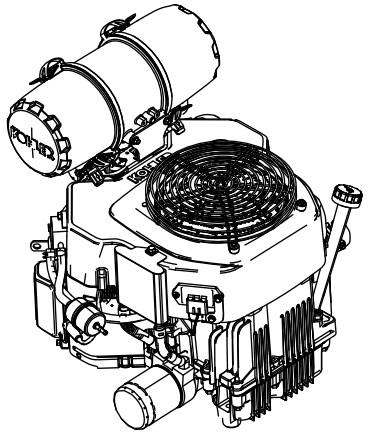

g230254

Figure 45

Servicing the Air Cleaner

Service Interval: Before each use or daily—Check the air cleaner for dirty, loose or damaged parts.

Every 250 hours—Service or replace the air-cleaner foam element (more often under dusty, dirty conditions).

Every 500 hours—Replace the air-cleaner paper element (more often under dusty, dirty conditions).

Note: Service the air cleaner more frequently if operating conditions are extremely dusty or sandy.

Removing the Filters

1. Park the machine on a level surface, disengage the blade-control switch (PTO), and engage the parking brake.
2. Shut off the engine, remove the key, and wait for all moving parts to stop before leaving the operating position.

3. Release the latches on the air cleaner and pull the air-inlet cover off the air-cleaner body (Figure 46).
4. Clean the air-inlet screen and cover.
5. Install the air-inlet cover and secure it with the latches (Figure 46).

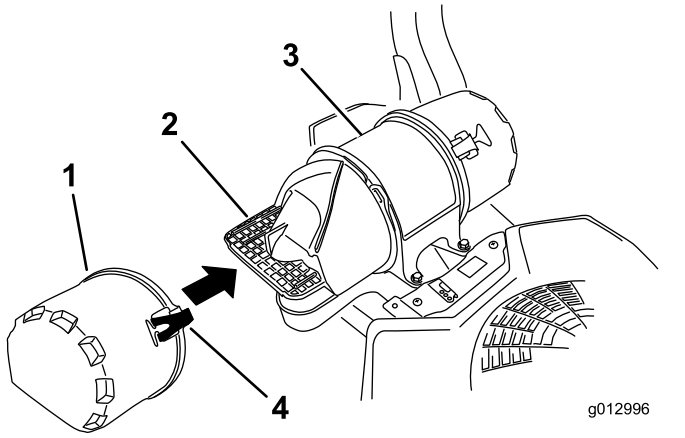

g012996

Figure 46

1. Air-inlet cover
2. Air-inlet screen
3. Air-cleaner body
4. Latch

6. Release the latches on the air cleaner and pull the air-cleaner cover off the air-cleaner body (Figure 47).
7. Clean the inside of the air-cleaner cover with compressed air.
8. Gently slide the primary filter out of the air-cleaner body (Figure 47).

   Note: Avoid knocking the filter into the side of the body.
9. Remove the inner filter only if you intend to replace it.

   Important: **Never attempt to clean the inner filter. If the safety filter is dirty, then the primary filter is damaged. Replace both filters.**

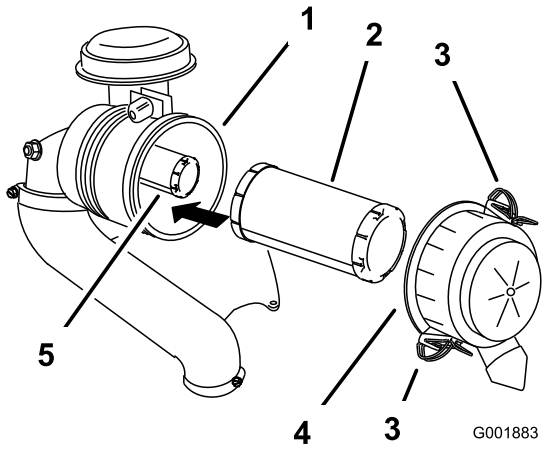

g001883

Figure 47

1. Inner filter
2. Primary filter
3. Air-cleaner cover
4. Latch
5. Air-cleaner body

10. Inspect the primary filter for damage by looking into the filter, while shining a bright light on the outside of the filter.

    Note: Holes in the filter will appear as bright spots. If the filter is damaged, discard it.

Servicing the Foam Element

1. Wash the foam element in liquid soap and warm water. When the element is clean, rinse it thoroughly.
2. Dry the element by squeezing it in a clean cloth.

   Important: **Replace the foam element if it is torn or worn.**

Servicing the Paper Element

1. Gently tap the paper element to dislodge dirt.

   Note: Do not wash the paper element or use pressurized air, as this will damage the element.

   Note: Replace a dirty, bent, or damaged element. Handle the new element carefully; do not use if the sealing surfaces are bent or damaged.
2. Clean the air-cleaner base as required, and check the condition.

Installing the Filters

Important: **To prevent engine damage, always operate the engine with both air filters and the cover installed.**

1. If you are installing new filters, check each filter for shipping damage.

   Note: Do not use a damaged filter.

2. If you are replacing the inner filter, carefully slide it into the filter body (Figure 47).
3. Carefully slide the primary filter over the safety filter (Figure 47).

   Note: Ensure that the primary filter is fully seated by pushing on the outer rim while installing it.

   Important: **Do not press on the soft, inside area of the filter.**

4. Install the air-cleaner cover and secure the latches (Figure 47).

Servicing the Engine Oil

Service Interval: Before each use or daily

After the first 5 hours

Every 100 hours (more often in dirty or dusty conditions).

Engine-Oil Specifications

Oil Type: Detergent oil (API service SJ or higher)

Oil Capacity: 1.9 to 2.6 L (2.0 to 2.7 US qt) with a filter change

Viscosity: See the table below.

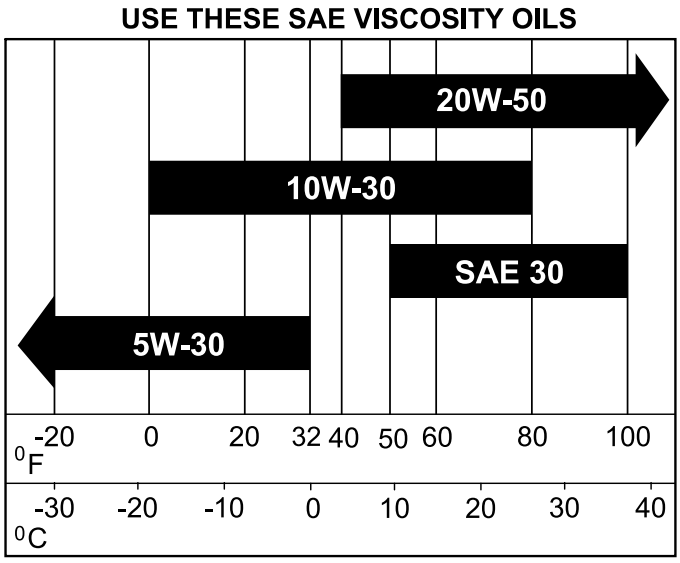

Figure 48

Checking the Engine-Oil Level

Note: Check the oil when the engine is cold.

Important: **If you overfill or underfill the engine crankcase with oil and run the engine, you may damage the engine.**

1. Park the machine on a level surface, disengage the blade-control switch (PTO), and engage the parking brake.
2. Shut off the engine, remove the key, and wait for all moving parts to stop before leaving the operating position.

   Note: Ensure that the engine is cool so that the oil has had time to drain into the sump.

3. To keep dirt, grass clippings, etc., out of the engine, clean the area around the oil-fill cap and dipstick before removing it (Figure 49).

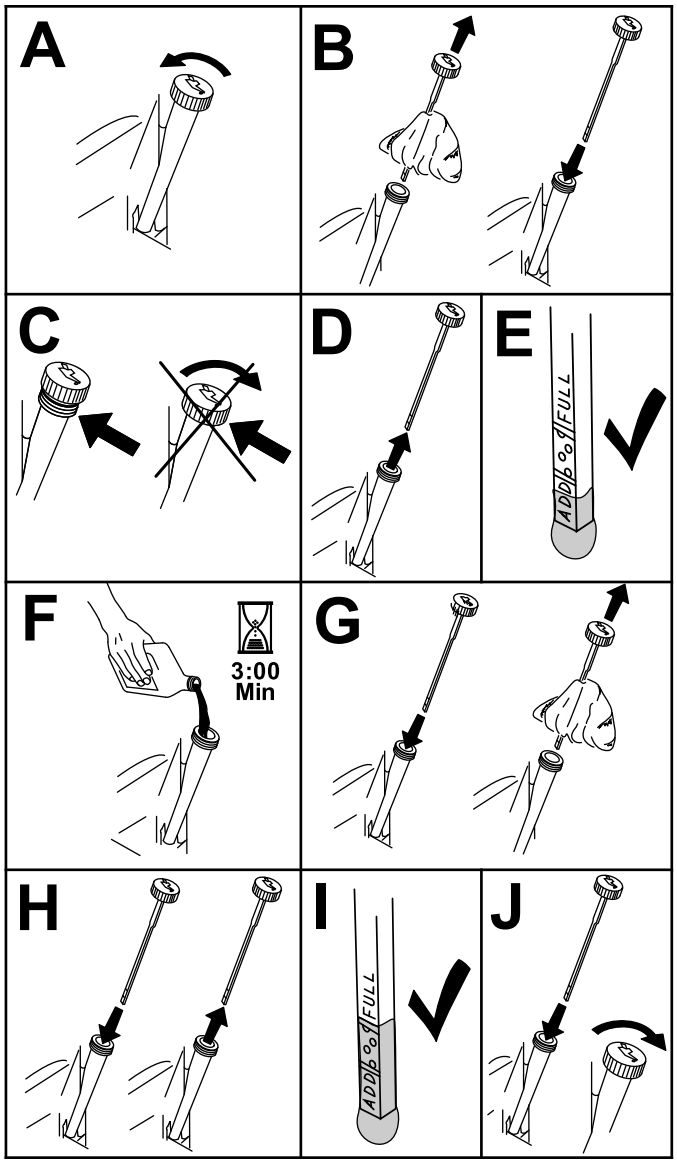

Figure 49

Changing the Engine Oil

Note: Dispose of the used oil at a recycling center.

1. Start the engine and let it run for 5 minutes.

   Note: This warms the oil so that it drains better.
2. Park the machine so that the drain side is slightly lower than the opposite side to ensure that the oil drains completely.
3. Disengage the blade-control switch (PTO) and engage the parking brake.
4. Shut off the engine, remove the key, and wait for all moving parts to stop before leaving the operating position.
5. Drain the oil from the engine (Figure 50).

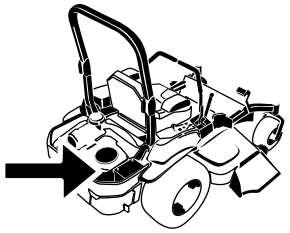

G008804

g008804

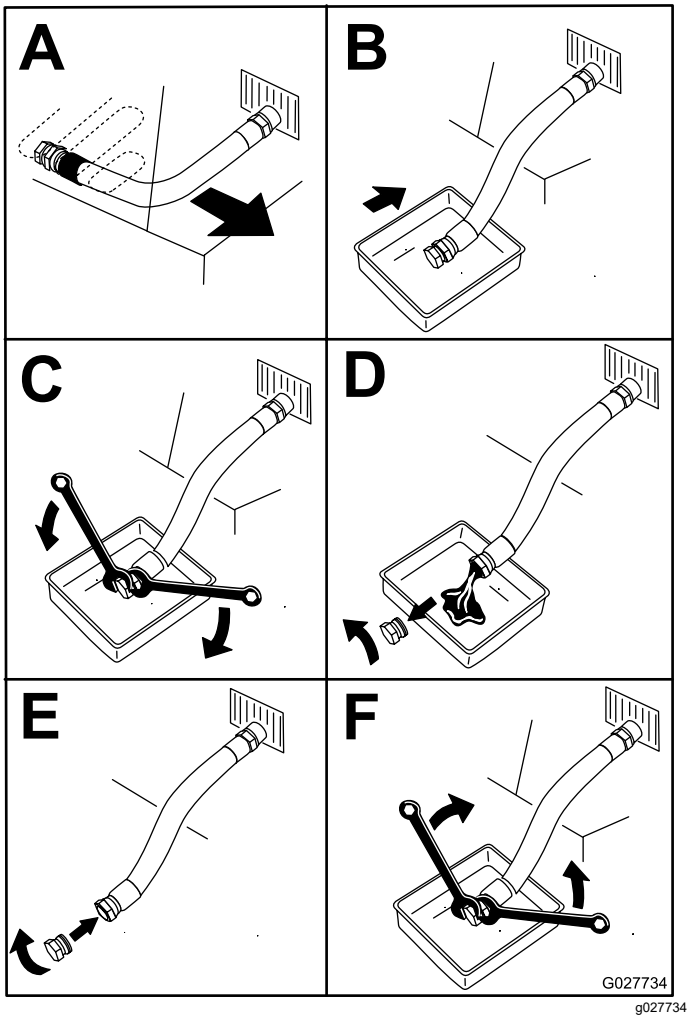

g027734

Figure 50

6. Slowly pour approximately 80% of the specified oil into the filler tube and slowly add the additional oil to bring it to the Full mark (Figure 51).

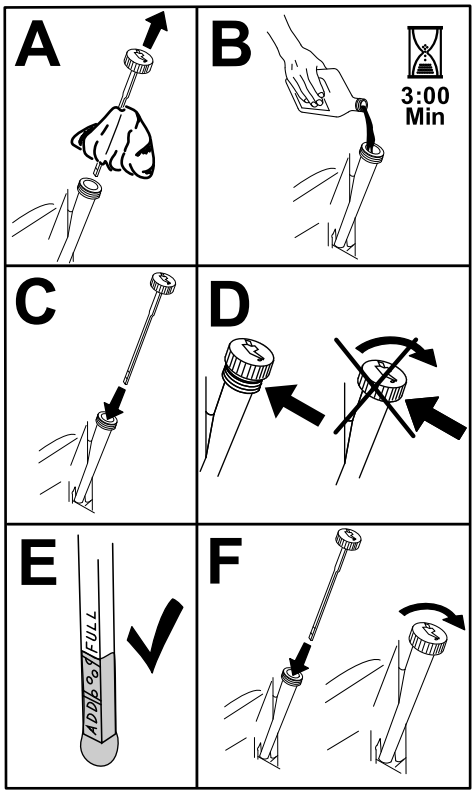

g194610

Figure 51

7. Start the engine and drive to a flat area.
8. Check the oil level again.

Changing the Engine-Oil Filter

1. Drain the oil from the engine; refer to Changing the Engine Oil (page 40).
2. Change the engine-oil filter (Figure 52).

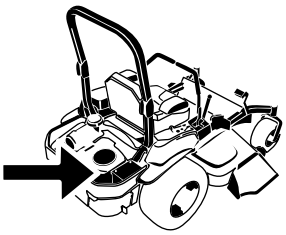

G008804

g008804

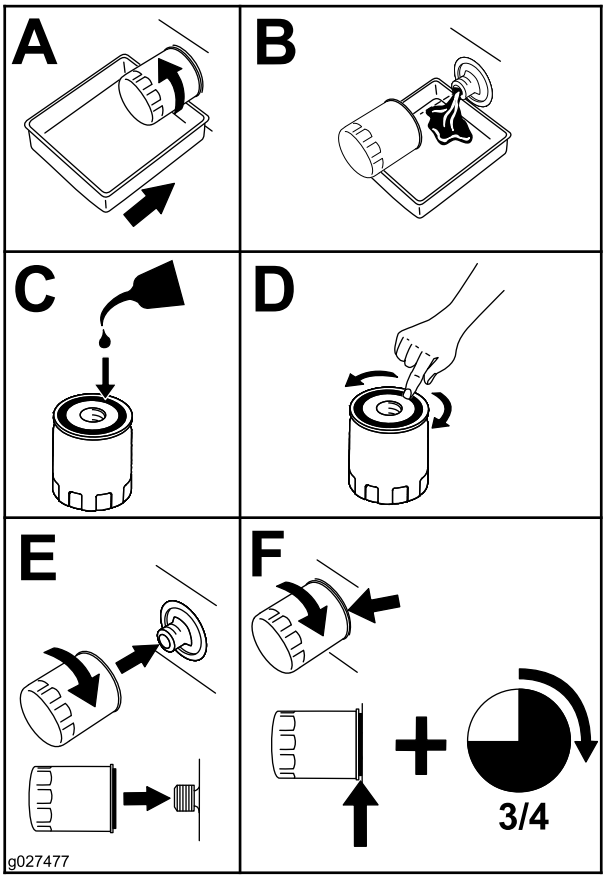

g027477

Figure 52

Note: Ensure that the oil-filter gasket touches the engine, and then turn the oil filter an extra 3/4 turn.

3. Fill the crankcase with the proper type of new oil; refer to Engine-Oil Specifications (page 39).

Servicing the Spark Plug

Service Interval: Every 200 hours—Check the spark plug(s).

Every 500 hours—Replace the spark plug(s).

Type: Champion XC12YC

Air Gap: 0.76 mm (0.03 inch)

Removing the Spark Plug

1. Park the machine on a level surface, disengage the blade-control switch (PTO), and engage the parking brake.
2. Shut off the engine, remove the key, and wait for all moving parts to stop before leaving the operating position.
3. Clean the area around the base of the plug(s) to keep dirt and debris out of the engine.
4. Locate and remove the spark plug(s) as shown in Figure 53.



G009922

g009922

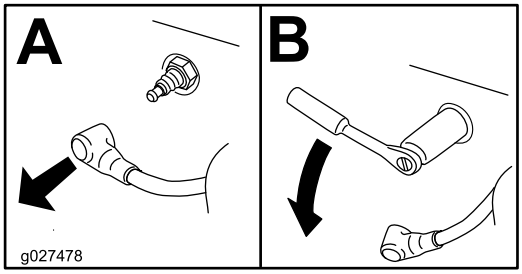

g027478

Figure 53

Checking the Spark Plug

Important: **Do not clean the spark plug(s). Always replace the spark plug(s) when it has a black coating, worn electrodes, an oily film, or cracks.**

If you see light brown or gray on the insulator, the engine is operating properly. A black coating on the insulator usually means the air cleaner is dirty.

Set the gap to 0.76 mm (0.03 inch).

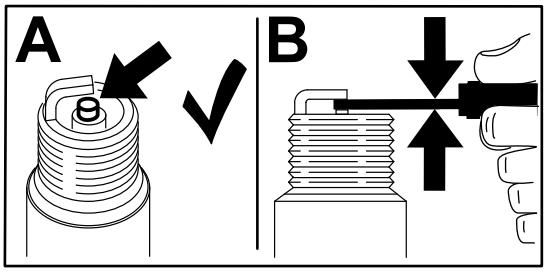

g206628

Figure 54

Installing the Spark Plug

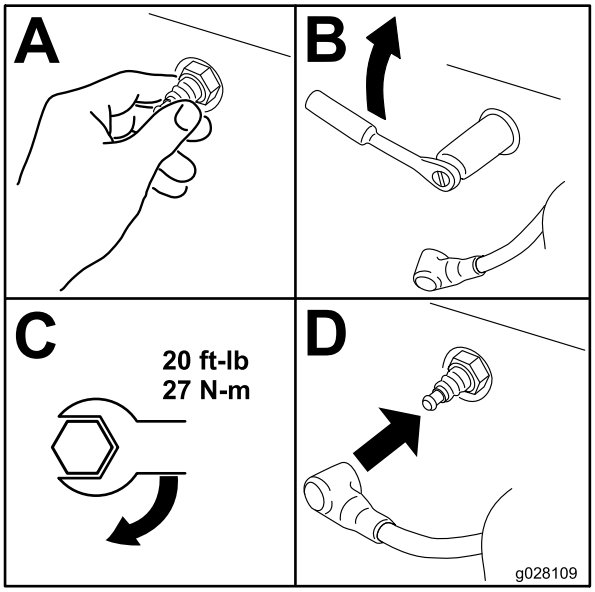

g028109

Figure 55

Checking the Spark Arrester

For Machines with a Spark Arrester

Service Interval: Every 50 hours

⚠ WARNING

Hot exhaust-system components may ignite fuel vapors even after you shut off the engine. Hot particles exhausted during engine operation may ignite flammable materials, resulting in personal injury or property damage.

Do not refuel or run the engine unless the spark arrester is installed.

1. Park the machine on a level surface, disengage the PTO, and engage the parking brake.
2. Shut off the engine, remove the key, and wait for all moving parts to stop before leaving the operating position.
3. Wait for the muffler to cool.
4. If you see any breaks in the screen or welds, replace the arrester.
5. If the screen is plugged, remove the arrester, shake loose particles out of the arrester, and clean the screen with a wire brush (soak the screen in solvent if necessary).
6. Install the arrester on the exhaust outlet.

Fuel System Maintenance

⚠ WARNING

Fuel-system components are under high pressure. The use of improper components can result in system failure, fuel leakage, and possible explosion.

Use only approved fuel lines and fuel filters.

Servicing the Electronic Fuel-Injection System

This machine contains an electronic fuel-injection system. It controls the fuel flow under different operating conditions.

The electronic-control unit (ECU) continuously monitors the operation of the EFI system.

If a problem or fault within the system is detected, the LED status light illuminates. The MIL is the red light located on the right side of the hour meter.

Once the light illuminates, make initial troubleshooting checks; refer to the LED status light section under Troubleshooting (page 69).

If these checks do not correct the problem, further diagnosis and servicing by an Authorized Service Dealer is necessary.

Replacing the Low-Pressure Fuel Filter

Service Interval: Every 150 hours/Yearly (whichever comes first)

The fuel filter is located near the engine on the front or rear side of the engine.

1. Park the machine on a level surface, disengage the blade-control switch, and engage the parking brake.
2. Shut off the engine, remove the key, and wait for all moving parts to stop before leaving the operating position.
3. Wait for the machine to cool down.
4. Close the fuel-shutoff valve under the seat (Figure 56).

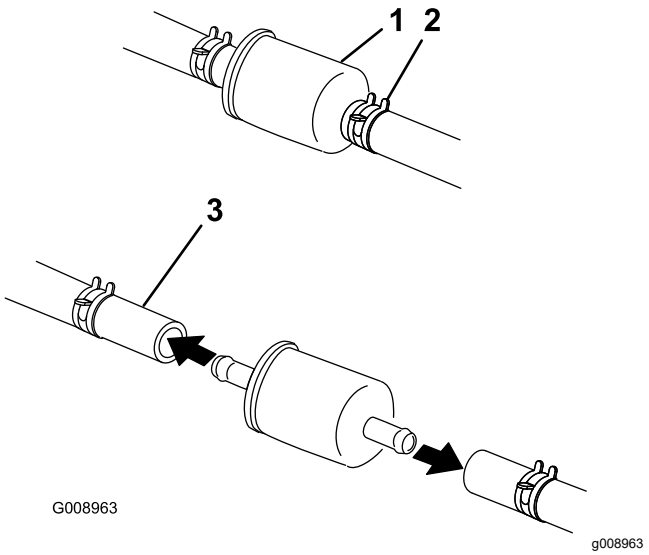

Figure 56

1. Fuel filter
2. Hose clamp
3. Fuel line

5. Squeeze the ends of the hose clamps together and slide them away from the filter (Figure 56).
6. Remove the filter from the fuel lines.
7. Install a new filter and move the hose clamps close to the filter (Figure 56).
8. Open the fuel-shutoff valve.

Important: **Install the fuel line hoses and secure with plastic ties the same as they were originally installed at the factory to keep the fuel line away from components that can cause fuel line damage.**

Servicing the High-Pressure Fuel Filter

Do not attempt to service the high-pressure fuel filter. The high-pressure filter is integrated within the fuel-pump module. The fuel filter and other components inside the fuel-pump module are not serviceable.

Important: **Do not attempt to open the fuel-pump module.**

Ensure that an Authorized Service Dealer replaces the fuel-pump module with the high-pressure fuel filter.

Servicing the Fuel Tank

Do not attempt to drain the fuel tank. Ensure that an Authorized Service Dealer drains the fuel tank and services any components of the fuel system.

Electrical System Maintenance

Electrical System Safety

- Disconnect the battery before repairing the machine. Disconnect the negative terminal first and the positive last. Connect the positive terminal first and the negative last.
- Charge the battery in an open, well-ventilated area, away from sparks and flames. Unplug the charger before connecting or disconnecting the battery. Wear protective clothing and use insulated tools.

Servicing the Battery

Service Interval: Monthly

Removing the Battery

⚠ WARNING

Battery terminals or metal tools could short against metal machine components causing sparks. Sparks can cause the battery gasses to explode, resulting in personal injury.

- **When removing or installing the battery, do not allow the battery terminals to touch any metal parts of the machine.**
- **Do not allow metal tools to short between the battery terminals and metal parts of the machine.**

⚠ WARNING

Incorrectly removing the cables from battery could damage the machine and cables, causing sparks. Sparks can cause the battery gasses to explode, resulting in personal injury.

- **Always disconnect the negative (black) battery cable before disconnecting the positive (red) cable.**
- **Always connect the positive (red) battery cable before connecting the negative (black) cable.**

1. Park the machine on a level surface, disengage the blade-control switch (PTO), and engage the parking brake.
2. Shut off the engine, remove the key, and wait for all moving parts to stop before leaving the operating position.
3. Remove the battery as shown in Figure 57.

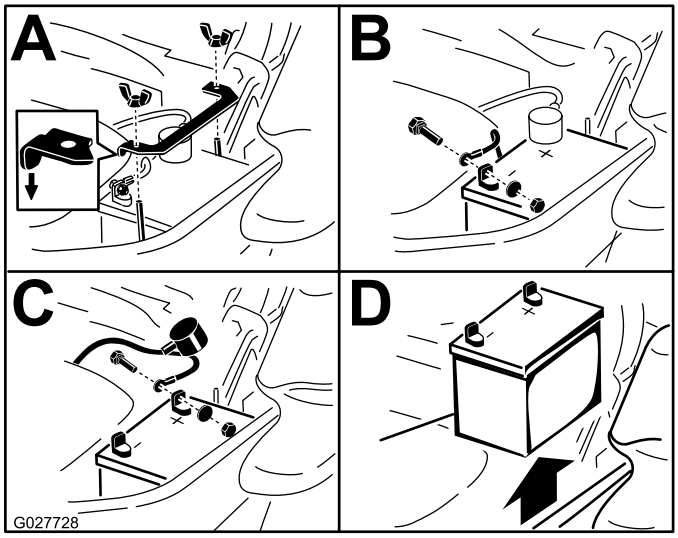

Figure 57

Charging the Battery

⚠ WARNING

Charging the battery produces gasses that can explode.

Never smoke near the battery and keep sparks and flames away from the battery.

Important: **Always keep the battery fully charged (1.265 specific gravity). This is especially important to prevent battery damage when the temperature is below 0°C (32°F).**

1. Remove the battery from the chassis; refer to Removing the Battery (page 44).
2. Charge the battery for 10 to 15 minutes at 25 to 30 A or for 30 minutes at 10 A.

   Note: Do not overcharge the battery.
3. When the battery is fully charged, unplug the charger from the electrical outlet, then disconnect the charger leads from the battery posts (Figure 58).
4. Install the battery in the machine and connect the battery cables; refer to Installing the Battery (page 45).

   Note: Do not run the machine with the battery disconnected; electrical damage may occur.

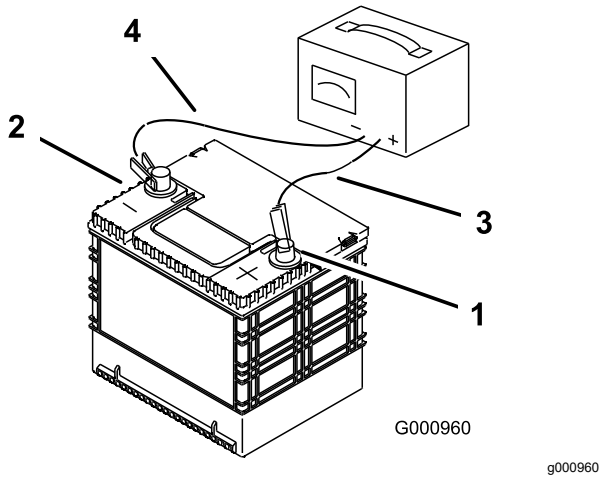

Figure 58

1. Positive (+) battery post
2. Negative (–) battery post
3. Red (+) charger lead
4. Black (–) charger lead

Installing the Battery

Note: Position the battery in the tray with the terminal posts opposite from the hydraulic tank (Figure 59).

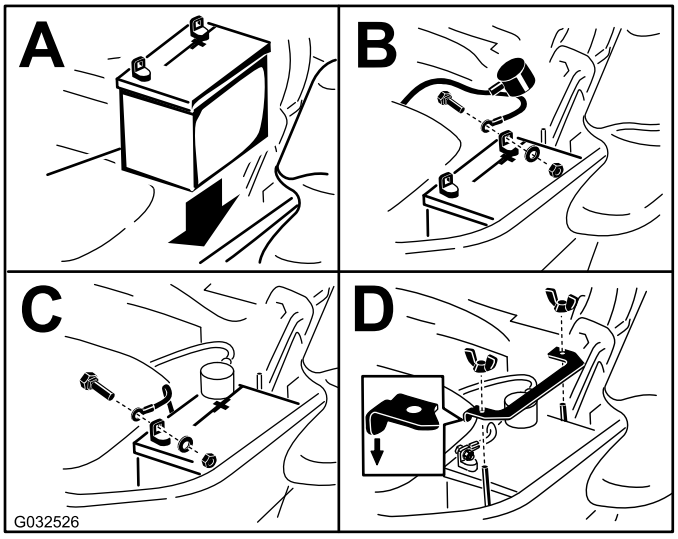

Figure 59

Servicing the Fuses

The electrical system is protected by fuses. It requires no maintenance, however, if a fuse blows check the component/circuit for a malfunction or short. The fuses are located on the console to the right of the seat (Figure 60).

To replace the fuses, remove the cover, pull out on the fuse to remove it, and install a new fuse.

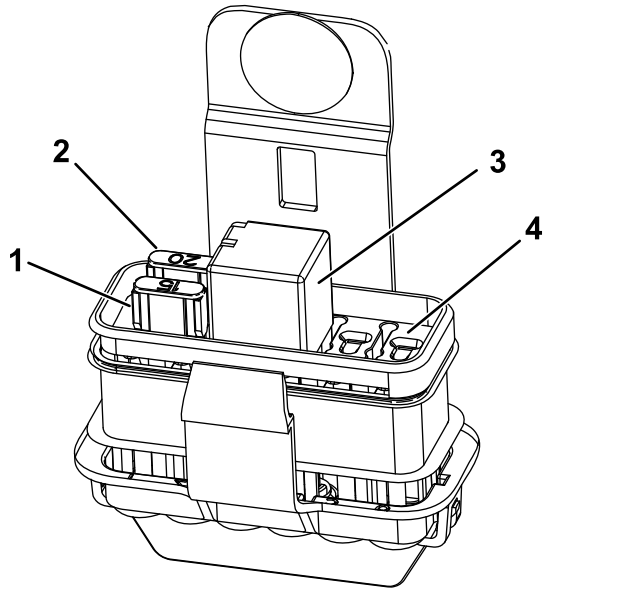

g231345

Figure 60

1. Auxiliary, 15 A
2. Main, 20 A
3. Start relay
4. Open

Drive System Maintenance

Checking the Seat Belt

Service Interval: Before each use or daily

Inspect the seat belt for wear, cuts, and proper operation of the retractor and buckle. Replace the seat belt if it is damaged.

Checking the Roll-Bar Knobs

Service Interval: Before each use or daily

⚠ WARNING

To avoid injury or death from rollover, keep the roll bar in the fully raised, locked position and use the seat belt.

Ensure that the seat is secured to the machine.

- Check that both the mounting hardware and the knobs are in good working condition.
- Make sure that the knobs are fully engaged with the roll bar in the raised position.

  Note: The upper hoop of the roll bar may need to be pushed forward or pulled rearward to fully engage both knobs (Figure 61 and Figure 62).

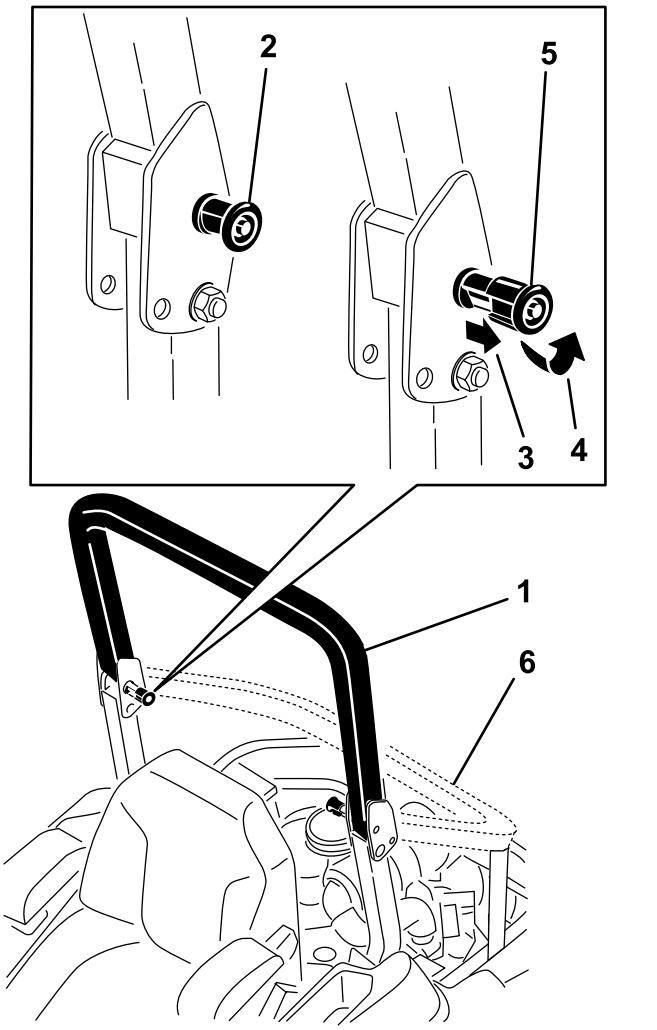

Figure 61

1. Roll bar in the upright position
2. Roll-bar knob in the latched position
3. Pull the roll-bar knob out and rotate it 90 degrees.
4. Rotate the roll-bar knob 90 degrees.
5. Roll-bar knob in the unlatched position
6. Roll bar in the folded position

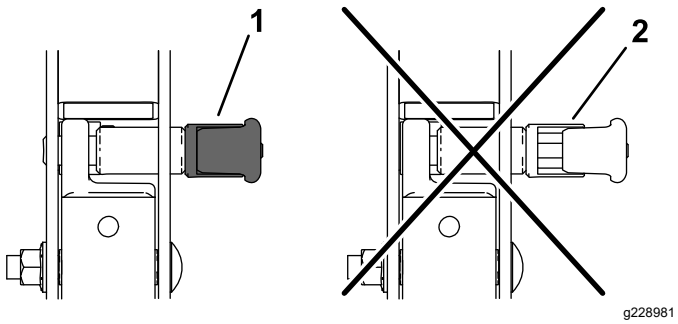

Figure 62

1. Engaged
2. Partially engaged—do not operate with the roll bar in this position.

Adjusting the Tracking

1. Disengage the blade-control switch (PTO).
2. Drive to an open flat area, move the motion-control levers to the NEUTRAL-LOCK position.
3. Move the throttle midway between the FAST and SLOW positions.
4. Move both motion-control levers all the way forward until they both hit the stops in the T-slot.
5. Check which way the machine tracks.
6. Engage the parking brake, shut off the engine, and remove the key.
7. Adjust the stop plates as needed.
   - If the machine tracks to the right, loosen the bolts and adjust the left stop plate rearward on the left T-slot until the machine tracks straight (Figure 63).
   - If the machine tracks to the left, loosen the bolts and adjust the right stop plate rearward on the right T-slot until the machine tracks straight (Figure 63).
8. Tighten the stop plate (Figure 63).

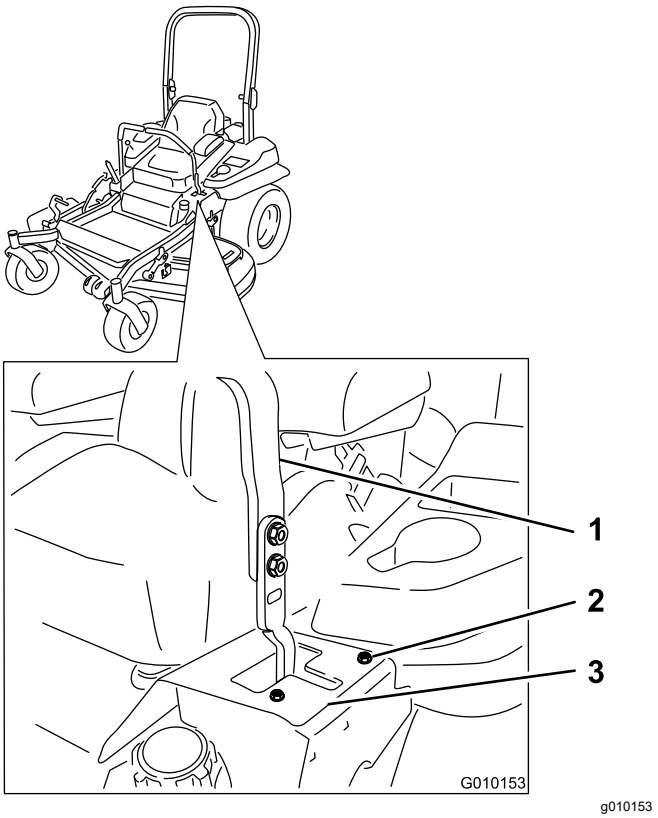

Figure 63

Left control lever shown

1. Control lever
2. Bolt
3. Stop plate

Checking the Tire Pressure

Service Interval: Every 50 hours/Monthly (whichever comes first)

Maintain the air pressure in the rear tires at 90 kPa (13 psi). Uneven tire pressure can cause uneven cut. Check the tires when they are cold to get the most accurate pressure reading.

Note: The front tires are semi-pneumatic tires and do not require air pressure maintenance.

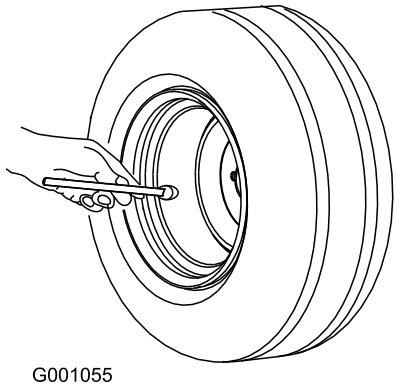

Figure 64

Checking the Wheel Lug Nuts

Check and torque the wheel lug nuts to 122 to 129 N·m (90 to 95 ft-lb).

Checking the Wheel-Hub Slotted Nut

Service Interval: After the first 100 hours

Every 500 hours

Check and ensure that the torque of the slotted nut is 286 to 352 N·m (211 to 260 ft-lb).

Note: Do not use anti-seize compound on wheel hub.

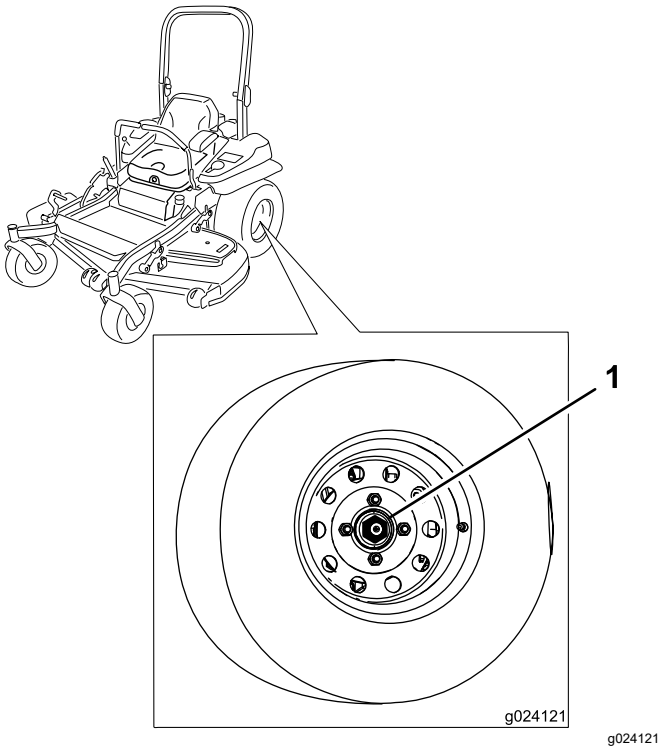

Figure 65

1. Slotted nut

Adjusting the Caster-Pivot Bearing

Service Interval: Every 500 hours/Yearly (whichever comes first)

1. Park the machine on a level surface, disengage the blade-control switch (PTO), and engage the parking brake.
2. Shut off the engine, remove the key, and wait for all moving parts to stop before leaving the operating position.
3. Remove the dust cap from caster and tighten the locknut (Figure 66).
4. Tighten the locknut until the spring washers are flat, and then back off a 1/4 turn to properly set the preload on the bearings (Figure 66).

Important: **Make sure that the spring washers are installed correctly as shown in Figure 66.**

5. Install the dust cap (Figure 66).

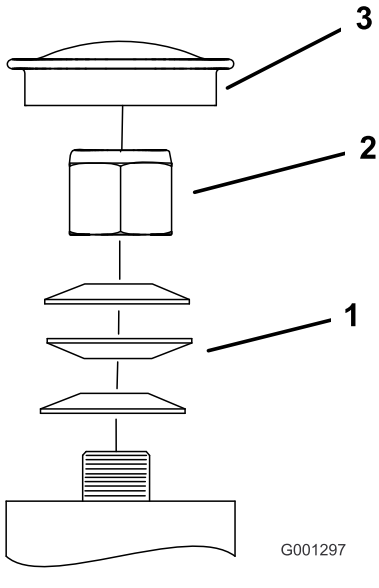

Figure 66

1. Spring washers
2. Locknut
3. Dust cap

Removing the Clutch Shim

Some later model year units have been built with clutches that contain a brake shim. When the clutch brake has worn to the point where the clutch no longer engages consistently, you can remove the shim to extend the clutch life.

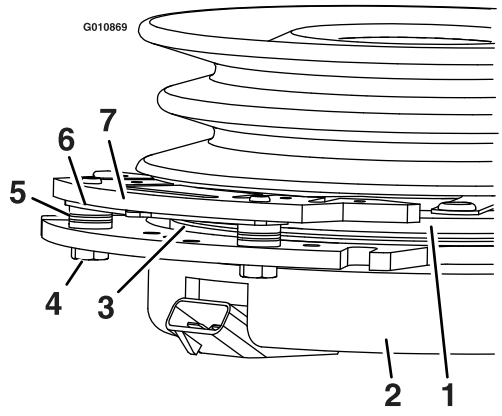

Figure 67

1. Armature
2. Field shell
3. Rotor
4. Brake-mounting bolt
5. Brake spacer
6. Re-gap shim
7. Brake pole

1. Park the machine on a level surface, disengage the blade-control switch (PTO), and engage the parking brake.
2. Shut off the engine, remove the key, and wait for all moving parts to stop before leaving the operating position.
3. Using an air compressor, blow out any debris from under the brake pole and around the brake spacers (Figure 68).

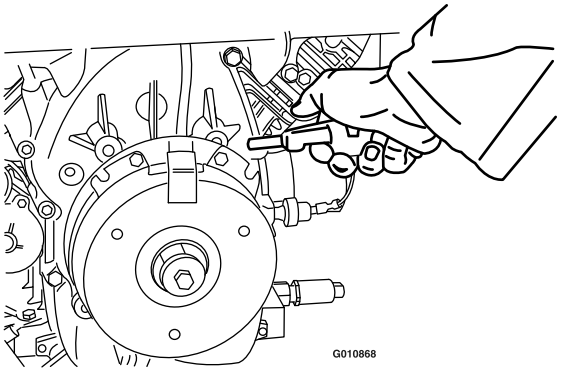

Figure 68

4. Check the condition of the wire-harness leads, connectors, and terminals.

   Note: Clean or repair as necessary.
5. Verify that 12 V is present at the clutch connector when the blade-control switch (PTO) switch is engaged.
6. Measure the gap between the rotor and armature. If the gap is greater than 1 mm (0.04 inch), do the following steps:

   A. Loosen both brake-mounting bolts 1/2 to 1 full turn as shown in Figure 69.

   Note: Do not remove the brake pole from the field shell/armature. The brake pole has worn to match the armature and needs to continue to match after you remove the shim to ensure proper brake torque.

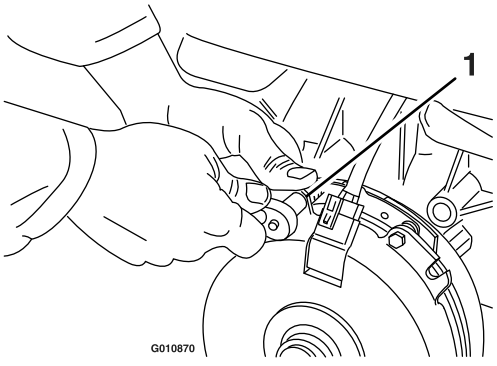

Figure 69

1. Brake-mounting bolt

B. Using needle-nose pliers, or by hand, hold the tab and remove the shim (Figure 70).

Note: Do not discard the shim until the clutch is functioning properly.

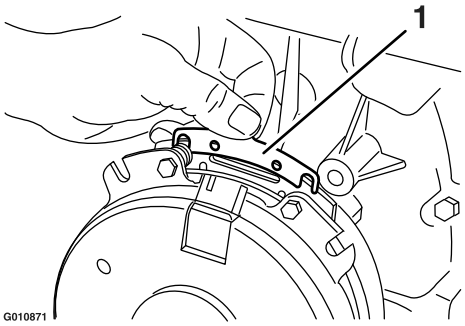

g010871

Figure 70

1. Shim

C. Using a pneumatic line, blow out any debris from under the brake pole and around the brake spacers.

D. Torque each bolt (M6 x 1) to 12.3 to 13.7 N·m (9.5 to 10.5 ft-lb).

E. Using a 0.25 mm (0.01 inch) thick feeler gauge, verify that a gap is present between the rotor and the armature face on both sides of the brake pole as shown in Figure 71 and Figure 72.

Note: Due to the way the rotor and the armature faces wear (peaks and valleys) it is sometimes difficult to measure the gap accurately.

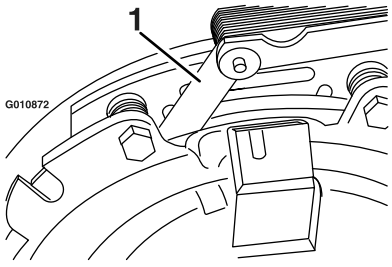

g010872

Figure 71

1. Feeler gauge

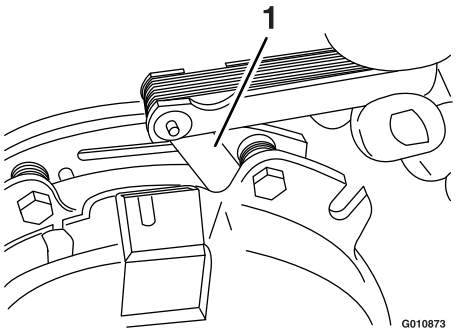

g010873

Figure 72

1. Feeler gauge

- If the gap is less than 0.25 mm (0.01 inch), then install the shim.
- If the gap is sufficient, proceed to the safety check in step F.

F. Perform the following safety check:

i. Sit on the seat and start the engine.

ii. Make sure that the blades do not engage with the blade-control switch (PTO) in the OFF position, and that the clutch is disengaged.

If the clutch does not disengage, install the shim again.

iii. Engage and disengage the blade-control switch (PTO) 10 consecutive times to ensure that the clutch is functioning properly.

Cooling System Maintenance

Cooling System Safety

- Swallowing engine coolant can cause poisoning; keep out of reach from children and pets.
- Discharge of hot, pressurized coolant or touching a hot radiator and surrounding parts can cause severe burns.
  - Always allow the engine to cool at least 15 minutes before removing the radiator cap.
  - Use a rag when opening the radiator cap, and open the cap slowly to allow steam to escape.

Cleaning the Engine Screen and Engine-Oil Cooler

Service Interval: Before each use or daily

Remove any buildup of grass, dirt, or other debris from the oil cooler and the engine screen (Figure 73).

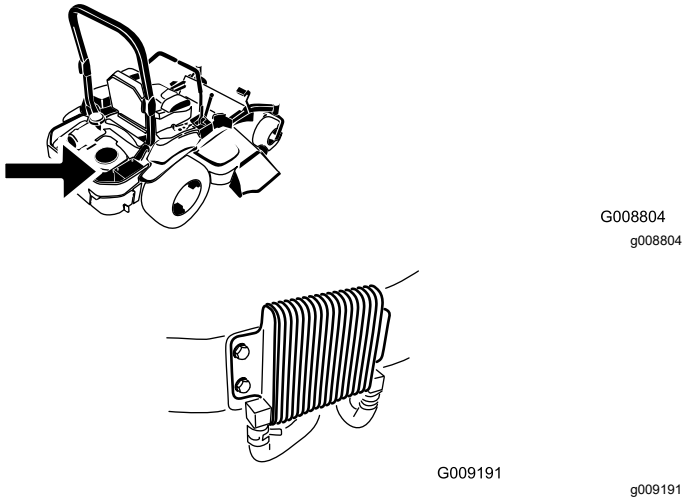

Figure 73

Remove any buildup of grass, dirt, or other debris from the engine screen. This helps ensure adequate cooling and correct engine speed and reduces the possibility of overheating and mechanical damage to the engine (Figure 70).

Cleaning the Engine-Cooling Fins and Shrouds

Service Interval: Every 100 hours/Yearly (whichever comes first)

1. Park the machine on a level surface, disengage the blade-control switch (PTO), and engage the parking brake.
2. Shut off the engine, remove the key, and wait for all moving parts to stop before leaving the operating position.
3. Remove the air-intake screen, the recoil starter, and the fan housing (Figure 74).
4. Clean the debris and grass from the engine parts.
5. Install the air-intake screen, the recoil starter, and the fan housing (Figure 74).

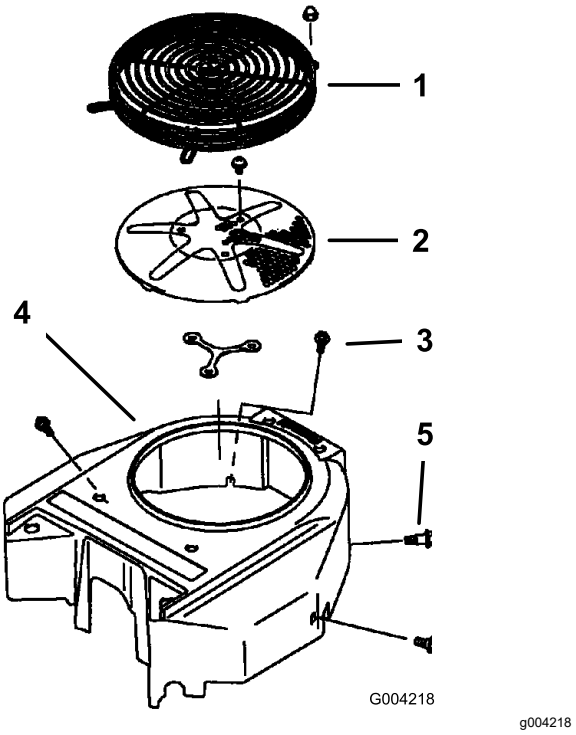

Figure 74

1. Engine guard
2. Engine air-intake screen
3. Bolt
4. Fan housing
5. Screw

Checking and Cleaning the Hydraulic-Unit Shrouds

Service Interval: Before each use or daily

1. Park the machine on a level surface, disengage the blade-control switch (PTO), and engage the parking brake.
2. Shut off the engine, remove the key, and wait for all moving parts to stop before leaving the operating position.
3. Move the seat forward.
4. Clean the debris and grass from the hydraulic-unit shrouds (Figure 75).
5. Position the seat.



g009922

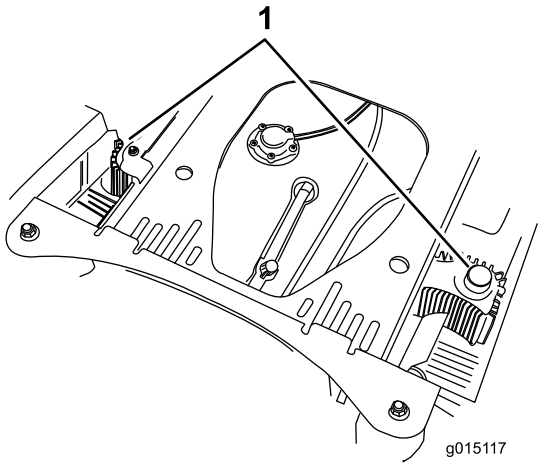

g015117

Figure 75

1. Hydraulic-unit shrouds

Brake Maintenance

Adjusting the Parking Brake

Service Interval: After the first 100 hours
Every 500 hours

Check to ensure that parking brake is adjusted properly. This procedure must be followed after the first 100 hours or when a brake component has been removed or replaced.

1. Park the machine on a level surface, disengage the blade-control switch, and engage the parking brake.
2. Shut off the engine, remove the key, and wait for all moving parts to stop before leaving the operating position.
3. Raise the rear of the machine up and support the machine with jack stands.
4. Remove the rear tires from the machine.
5. Remove any debris from the brake area.
6. Release the drive wheels; refer to Using the Drive-Wheel-Release Valves (page 29).
7. Disengage the parking brake.
8. Remove the spring clevis pin from the rear linkage and caliper (Figure 76).

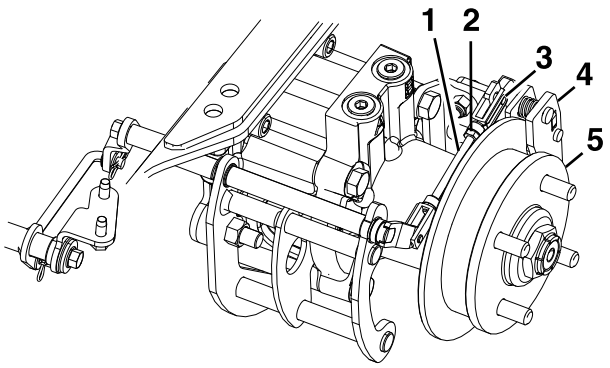

g297209

Figure 76

1. Rear linkage
2. Jam nut
3. Spring clevis pin
4. Caliper
5. Wheel hub

9. Loosen the jam nut on the rear linkage.
10. Push the caliper lever forward with finger pressure until the brake pad contacts the hub rotor.
11. Adjust the rear linkage until the spring clevis pin can be inserted in the hole in the caliper lever.

    Note: To lengthen the linkage, rotate the clevis 1 turn outward.

12. Tighten the jam nut on the rear linkage (Figure 76).
13. Ensure that the wheel hub moves freely between the caliper brake pads.
14. Repeats steps 8 to 13 for the right side.
15. Rotate the drive wheel release handle to the operating position; refer to Using the Drive-Wheel-Release Valves (page 29).
16. Install the rear tires and torque the lug nuts to 129 N·m (95 ft-lb).
17. Remove the jack stands.

Belt Maintenance

Inspecting the Belts

Service Interval: Every 50 hours

Replace the belt if it is worn. The signs of a worn belt include squealing while the belt is rotating; the blades slipping while cutting grass; and frayed edges, burn marks, and cracks on the belt.

Replacing the Mower Belt

1. Park the machine on a level surface, disengage the blade-control switch (PTO), and engage the parking brake.
2. Shut off the engine, remove the key, and wait for all moving parts to stop before leaving the operating position.
3. Lower the mower to the 76 mm (3 inch) height of cut.
4. Remove the belt covers (Figure 77).

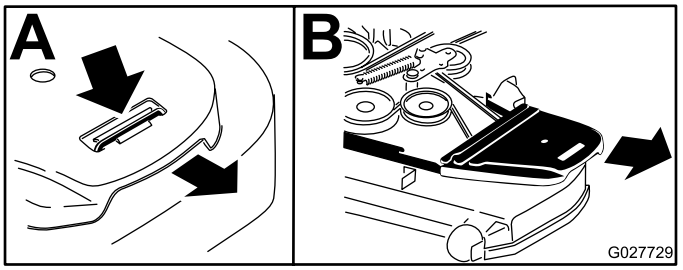

g027729

Figure 77

1. Push the tab down.
2. Remove the belt cover.

5. Remove the floor pan; refer to Removing or Installing the Floor Pan (page 33).
6. Use a ratchet in the square hole in the idler arm to remove tension on the idler spring (Figure 78).
7. Remove the belt from the mower-deck pulleys.
8. Remove the belt guide on the spring-loaded idler arm (Figure 78).
9. Remove the existing belt.
10. Install the new belt around the mower pulleys and the clutch pulley under the engine (Figure 78).

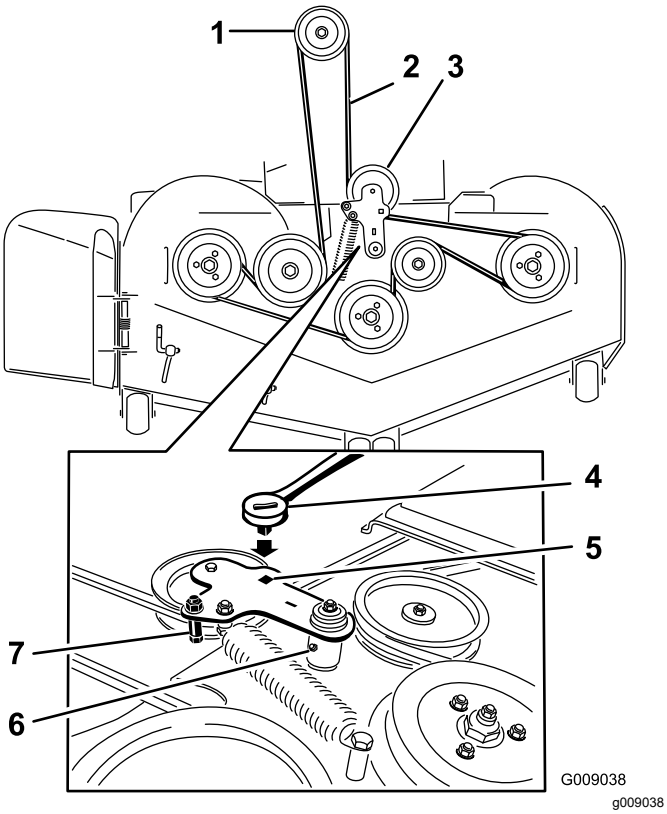

Figure 78

1. Clutch pulley
2. Mower belt
3. Spring-loaded idler pulley
4. Ratchet
5. Square hole in the idler arm for the ratchet
6. Idler-grease fitting
7. Belt guide

11. Install the belt guide on the idler arm (Figure 78).
12. Using the ratchet in the square hole, install the idler spring (Figure 78).

    Note: Make sure that the spring ends are seated in the anchor grooves.
13. Install the floor pan; refer to Removing or Installing the Floor Pan (page 33).
14. Install the belt covers (Figure 79).

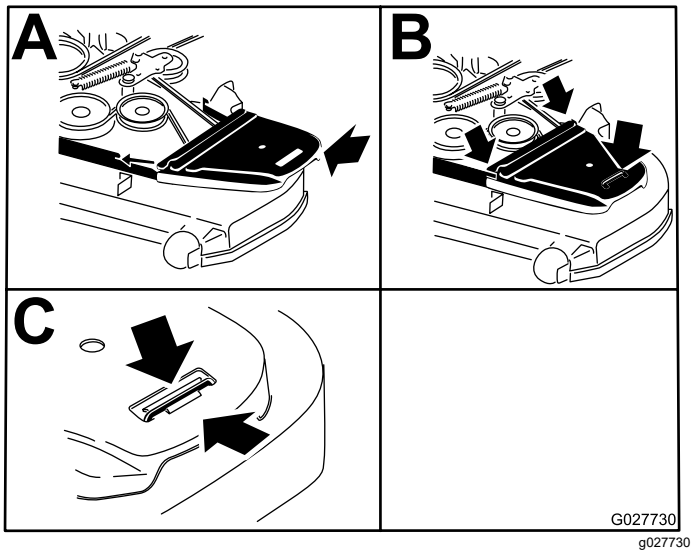

Figure 79

1. Position the belt cover.
2. Slide the belt cover under the side catches.
3. Ensure that the tab is under the metal catch.

15. Install the floor pan; refer to Removing or Installing the Floor Pan (page 33).

Replacing the Hydraulic Pump-Drive Belt

1. Park the machine on a level surface, disengage the blade-control switch (PTO), and engage the parking brake.
2. Shut off the engine, remove the key, and wait for all moving parts to stop before leaving the operating position.
3. Remove the mower belt; refer to Replacing the Mower Belt (page 53).
4. Raise the machine and support it with jack stands (Figure 80).

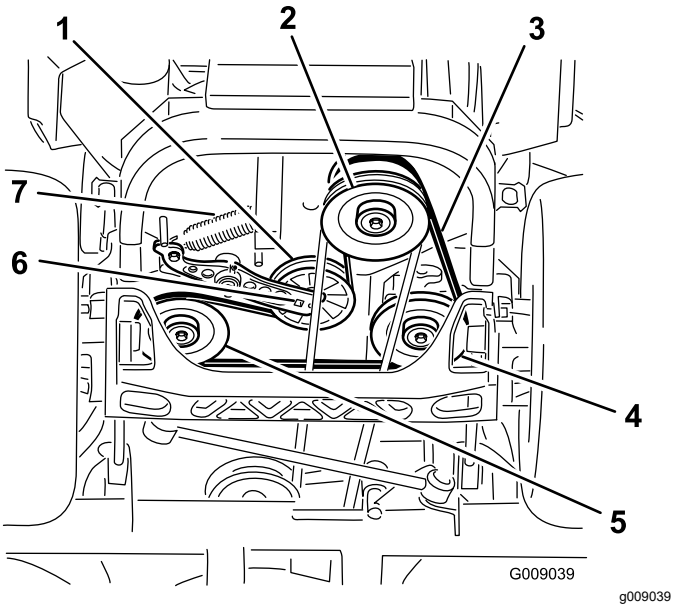

g009039

Figure 80

1. Idler pulley
2. Clutch pulley
3. Pump-drive belt
4. Right hydraulic-pump pulley
5. Left hydraulic-pump pulley
6. Square hole in the idler arm
7. Idler spring

5. Use a ratchet in the square hole in the idler arm to remove the idler spring (Figure 80).
6. Unhook the idler spring from the frame (Figure 80).
7. Remove the belt from the hydraulic-unit-drive pulleys and the engine pulley.
8. Install the new belt around engine pulley and the 2 drive pulleys.
9. Using a ratchet in the square hole in the idler arm, install the idler spring to the frame (Figure 80).
10. Install the mower belt; refer to Replacing the Mower Belt (page 53).

Controls System Maintenance

Adjusting the Control-Handle Position

There are 2 height positions for the control levers—high and low. Remove the bolts to adjust the height for the operator.

1. Park the machine on a level surface, disengage the blade-control switch (PTO), and engage the parking brake.
2. Shut off the engine, remove the key, and wait for all moving parts to stop before leaving the operating position.
3. Loosen the bolts and flange nuts installed in the levers (Figure 81).
4. Align the levers in the front-to-rear position by bringing the levers together to the NEUTRAL position, and slide them until they are aligned, then tighten the bolts (Figure 82).

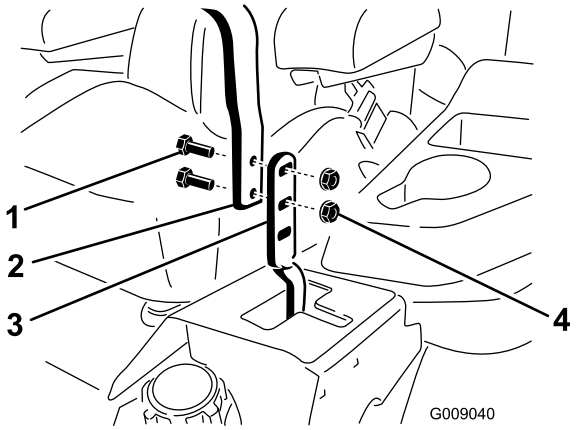

g009040

Figure 81

1. Bolt (2)
2. Handle
3. Control lever
4. Nut (2)

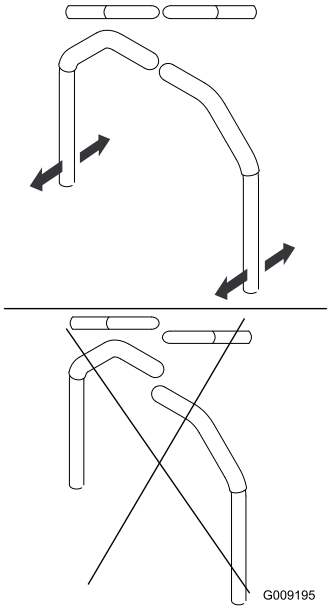

g009195

Figure 82

5. If the ends of the levers hit against each other, refer to Adjusting the Motion-Control Neutral-Lock Pivot (page 57).
6. Repeat to adjust the control levers.

Adjusting the Motion-Control Linkage

Located on either side of the machine, below the seat, are the pump-control linkages. Rotating the end nut with a 1/2-inch deep socket wrench allows fine tuning adjustments so that the machine does not move in neutral. Any adjustments should be made for neutral positioning only.

⚠ WARNING

The engine must be running and the drive wheels turning so that you can perform the adjustments. Contact with moving parts or hot surfaces may cause personal injury.

Keep your fingers, hands, and clothing clear of rotating components and hot surfaces.

1. Park the machine on a level surface, disengage the blade-control switch (PTO), move the motion-control levers to the NEUTRAL-LOCK position, and engage the parking brake.
2. Shut off the engine, remove the key, and wait for all moving parts to stop before leaving the operating position.
3. Push the deck-lift pedal, remove the height-of-cut pin, and lower the mower deck to the ground
4. Raise the rear of the machine up and support it with jack stands (or equivalent support) just high enough to allow the drive wheels to turn freely.
5. Remove the electrical connection from the seat safety switch, located under the bottom cushion of the seat.

   Note: The switch is a part of the seat assembly.
6. **Temporarily** install a jumper wire across the terminals in the connector of the main wire harness.
7. Start the engine, run it at full throttle, and disengage the parking brake.

   Note: Before starting the engine, ensure that the parking brake is engaged and that the motion-control levers are out. You do not have to be in the seat.
8. Run the machine at least 5 minutes with the drive levers at full forward speed to bring the hydraulic fluid up to the operating temperature.

   Note: The motion-control levers must be in neutral while you are making any adjustments.
9. Bring the motion-control levers into the NEUTRAL position.
10. Adjust the pump-control-rod lengths by rotating the double nuts on the rod in the appropriate direction until the wheels slightly creep in reverse (Figure 83).

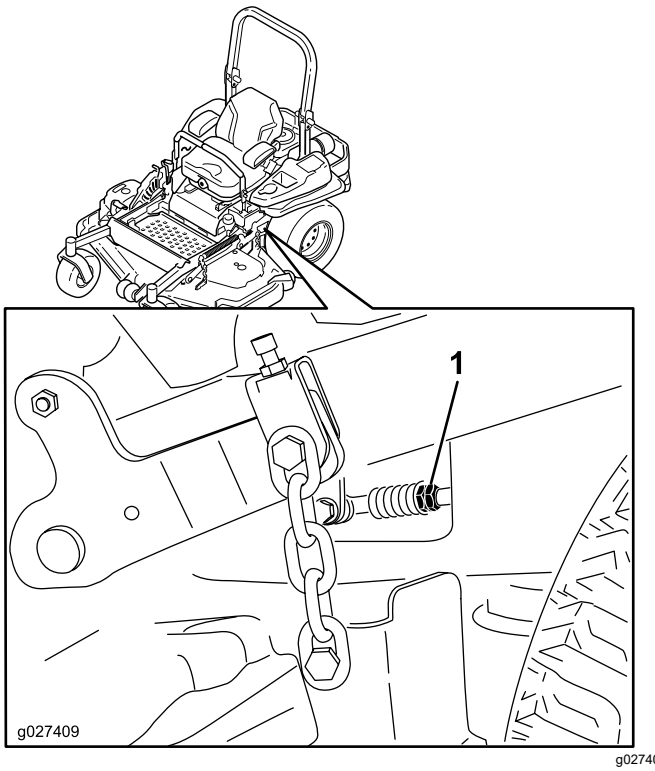

g027409

Figure 83

1. Double nuts

11. Move the motion-control levers to the REVERSE position and while applying slight pressure to the lever, allow the reverse-indicator springs to bring the levers back to neutral.

    Note: The wheels should stop turning or slightly creep in reverse.

12. Shut off the machine.
13. Remove the jumper wire from the wire harness and plug the connector into the seat switch.
14. Remove the jack stands.
15. Raise the mower deck and install the height-of-cut pin.
16. Check and ensure that the machine does not creep in neutral with the parking brake disengaged.

Adjusting the Motion-Control Damper

You can adjust the top damper-mounting bolt to obtain the desired motion-control lever resistance. Refer to Figure 84 for mounting options.

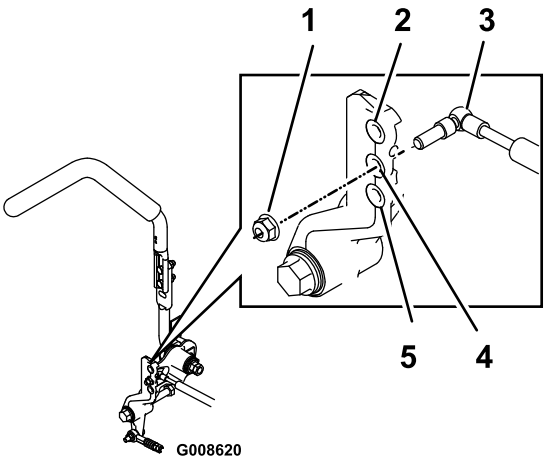

g008620

Figure 84

Right Motion Control Shown

1. Torque the locknut to 23 N·m (17 ft-lb). The bolt must protrude past the end of the locknut after torquing.
2. Most resistance (firmest feel)
3. Damper
4. Medium resistance (medium feel)
5. Least resistance (softest feel)

Adjusting the Motion-Control Neutral-Lock Pivot

You can adjust the flanged nut to obtain the desired motion-control lever resistance when moving it to the NEUTRAL-LOCK position. See Figure 85 for adjustment options.

1. Loosen the jam nut.
2. Tighten or loosen the flanged nut to the desired feel.
   - For more resistance, tighten the flanged nut.
   - For less resistance, loosen the flanged nut
3. Tighten the jam nut.

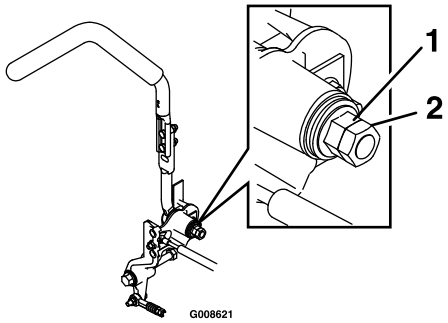

g008621

Figure 85

1. Flanged nut
2. Jam nut

Hydraulic System Maintenance

Hydraulic System Safety

- Seek immediate medical attention if fluid is injected into skin. Injected fluid must be surgically removed within a few hours by a doctor.
- Ensure that all hydraulic-fluid hoses and lines are in good condition and all hydraulic connections and fittings are tight before applying pressure to the hydraulic system.
- Keep your body and hands away from pinhole leaks or nozzles that eject high-pressure hydraulic fluid.
- Use cardboard or paper to find hydraulic leaks.
- Safely relieve all pressure in the hydraulic system before performing any work on the hydraulic system.

Hydraulic-Fluid Specifications

Hydraulic-Fluid Type: Toro® HYPR-OIL™ 500 hydraulic fluid or Mobil® 1 15W-50.

Important: **Use the specified fluid. Other fluids could damage the hydraulic system.**

Each Hydraulic-System Fluid Capacity: 1.5 L (52 fl oz) per side with filter change

Checking the Hydraulic Fluid

Service Interval: Every 50 hours—Check the hydraulic-fluid level.

1. Park the machine on a level surface, disengage the blade-control switch (PTO), and engage the parking brake.
2. Shut off the engine, remove the key, and wait for all moving parts to stop before leaving the operating position.
3. Allow the engine and the hydraulic system to cool for 10 minutes.

   Note: The oil level on the dipstick is incorrect when the oil is checked and the machine is hot.
4. Move the seat forward.
5. Clean the area around the dipsticks of hydraulic-system reservoirs (Figure 86).
6. Remove 1 dipstick from the hydraulic reservoir (Figure 86).
7. Wipe the dipstick off and thread the dipstick into the reservoir.
8. Remove the dipstick and look at the end (Figure 86).

   Important: **Do not overfill the hydraulic units with fluid, as damage may occur. Do not run the machine with fluid below the add mark.**
9. If the fluid level is at the add mark, slowly pour only enough fluid into the hydraulic reservoir to raise the level to the full or **H** line.
10. Install the dipstick.
11. Repeat the procedure for the opposite dipstick.

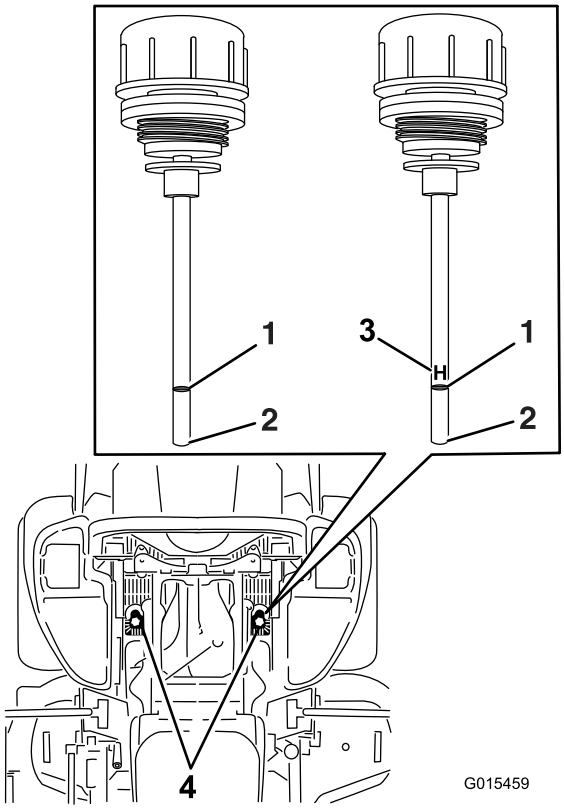

Figure 86

Either dipstick is used in the machine

1. Full
2. Add
3. **H** —means high level
4. Dipstick locations under seat

Changing the Hydraulic Fluid and Filters

Service Interval: After the first 250 hours—Change the hydraulic filters and hydraulic fluid.

Every 250 hours—After the initial change—change the hydraulic-system filters and fluid when using Mobil 1 15W50 fluid. (Change it more often under dirty or dusty conditions)

Every 500 hours—After the initial change—change the hydraulic-system filters and fluid when using Toro® HYPR-OIL™ 500 fluid. (Change it more often under dirty or dusty conditions)

To replace the hydraulic fluid, the filters need to be removed. Replace both at the same time; refer to Hydraulic-Fluid Specifications (page 58) for fluid specifications.

1. Park the machine on a level surface, disengage the blade-control switch, and engage the parking brake.
2. Shut off the engine, remove the key, and wait for all moving parts to stop before leaving the operating position.
3. Raise the machine and support it with jack stands (Figure 87).

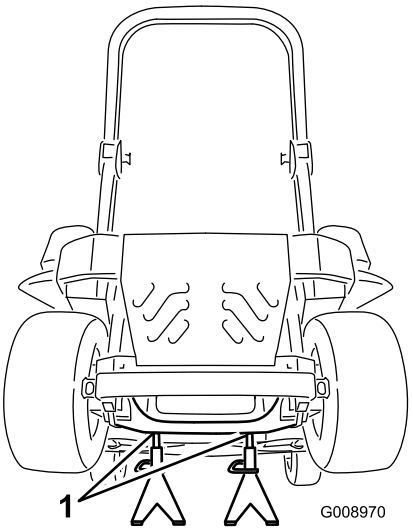

g008970

Figure 87

1. Jack stands

4. Remove both the mower belt and the pump-drive belt; refer to Replacing the Mower Belt (page 53) and Replacing the Hydraulic Pump-Drive Belt (page 55).

   Note: This prevents fluid from getting on the belts.

5. Place a drain pan under the filter, remove the old filter, and wipe the surface clean (Figure 88).

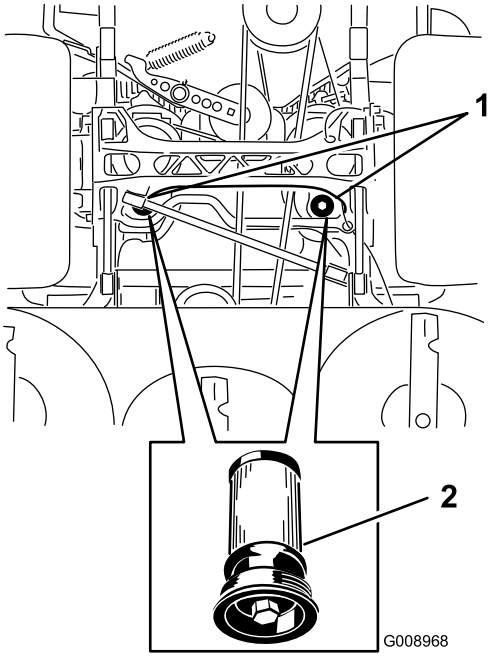

g008968

Figure 88

Bottom view of the machine

1. Filter locations
2. Hydraulic filter

6. Apply a thin coat of hydraulic fluid to the rubber gasket on the replacement filter (Figure 88).
7. Install the replacement hydraulic filter.
8. Install the pump-drive belt and the mower belt.
9. Remove the jack stands and lower the machine (Figure 87).
10. Add fluid to the hydraulic reservoir and check for any leaks.
11. Clean up any spilled fluid.
12. Start the engine and let it run for about 2 minutes to purge air from the system.
13. Shut off the engine and check for leaks.
14. Check the fluid level while the fluid is cold.
15. If required, add fluid to the hydraulic reservoir.

    Note: Do not overfill.

Blade Maintenance

Blade Safety

- Inspect the blades periodically for wear or damage.
- Use care when checking the blades. Wrap the blades or wear gloves, and use caution when servicing the blades. Only replace or sharpen the blades; never straighten or weld them.
- On multi-bladed machines, take care as rotating one blade can cause other blades to rotate.
- Replace worn or damaged blades and bolts in sets to preserve balance.

Servicing the Cutting Blades

To ensure a superior quality of cut, keep the blades sharp. For convenient sharpening and replacement, you may want to keep extra blades on hand.

Before Inspecting or Servicing the Blades

1. Park the machine on a level surface, disengage the blade-control switch (PTO), and engage the parking brake.
2. Shut off the engine, remove the key, and disconnect the spark-plug wires from the spark plugs.

Inspecting the Blades

Service Interval: Before each use or daily

1. Inspect the cutting edges (Figure 89).
2. If the edges are not sharp or have nicks, remove and sharpen the blade; refer to Sharpening the Blades (page 62).
3. Inspect the blades, especially in the curved area.
4. If you notice any cracks, wear, or a slot forming in this area, immediately install a new blade (Figure 89).

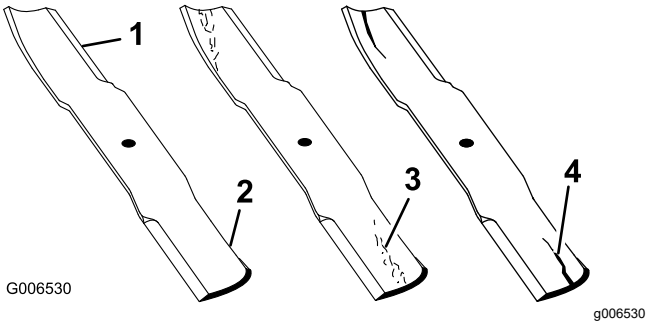

Figure 89

1. Cutting edge
2. Curved area
3. Wear/slot forming
4. Crack

Checking for Bent Blades

Note: The machine must be on a level surface for the following procedure.

1. Raise the mower deck to the highest height-of-cut position.
2. While wearing thickly padded gloves, or other adequate hand protection, slowly rotate the blade into a position that allows you to measure the distance between the cutting edge and the level surface the machine is on (Figure 90).

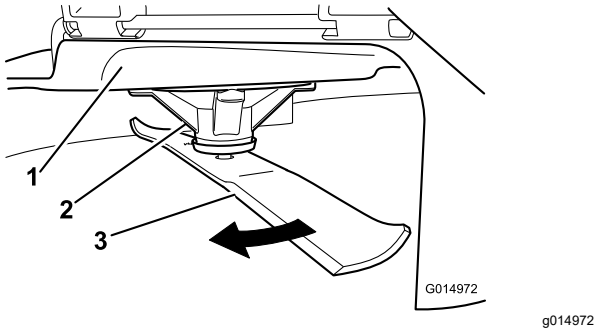

g014972

Figure 90

1. Deck
2. Spindle housing
3. Blade

3. Measure from the tip of the blade to the flat surface (Figure 91).

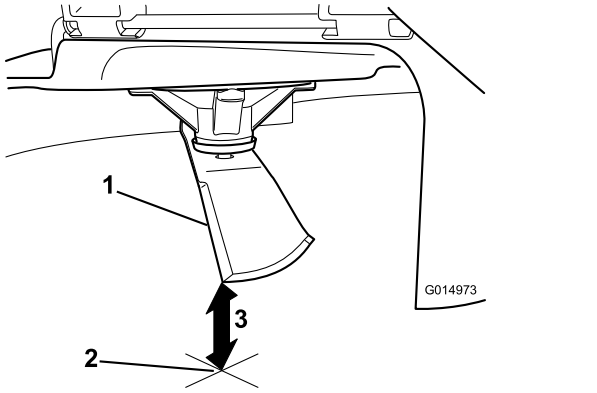

g014973

Figure 91

1. Blade (in position for measuring)
2. Level surface
3. Measured distance between blade and the surface (A)

4. Rotate the same blade 180 degrees so that the opposing cutting edge is now in the same position (Figure 92).

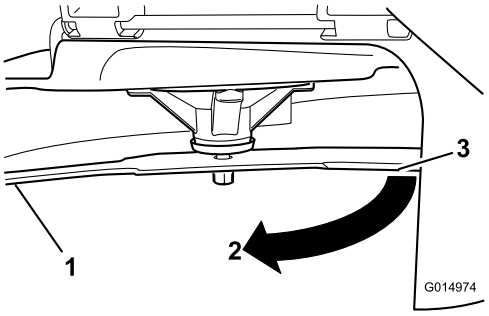

g014974

Figure 92

1. Blade (side previously measured)
2. Measurement (position used previously)
3. Opposing side of blade being moved into measurement position

5. Measure from the tip of the blade to the flat surface (Figure 93).

   Note: The variance should be no more than 3 mm (1/8 inch).

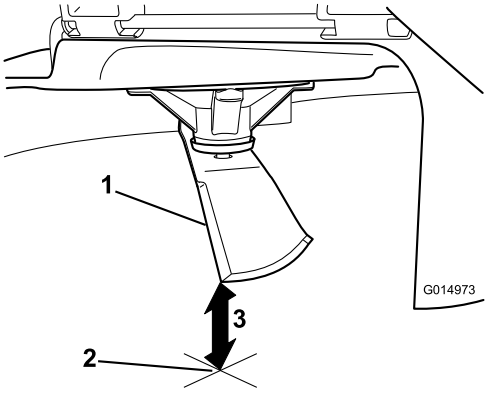

g014973

Figure 93

1. Opposite blade edge (in position for measuring)
2. Level surface
3. Second measured distance between blade and surface (B)

   A. If the difference between A and B is greater than 3 mm (1/8 inch), replace the blade with a new blade; refer to Removing the Blades (page 62) and Installing the Blades (page 62).

      Note: If a bent blade is replaced with a new blade, and the dimension obtained continues to exceed 3 mm (1/8 inch), the blade spindle could be bent. Contact an Authorized Service Dealer for service.

   B. If the variance is within constraints, move to the next blade.

6. Repeat this procedure on each blade.

Removing the Blades

Replace the blades if they hit a solid object, or if the blade is out of balance or bent.

1. Place a wrench on the flat of the spindle shaft or hold the blade end using a rag or thickly padded glove.
2. Remove the blade bolt, bushing, and blade from the spindle shaft (Figure 94).

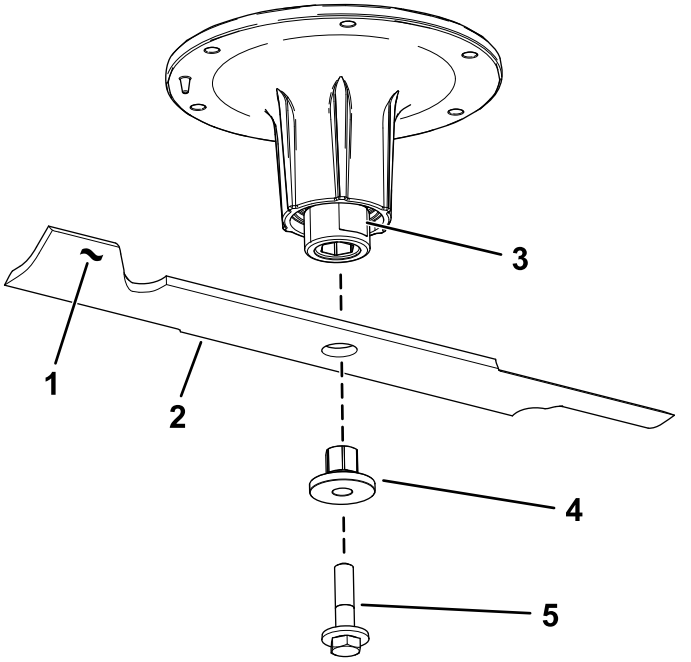

g295816

Figure 94

1. Sail area of the blade
2. Blade
3. Flat of the spindle shaft
4. Bushing
5. Blade bolt

Sharpening the Blades

1. Use a file to sharpen the cutting edge at both ends of the blade (Figure 95).

   Note: Maintain the original angle.

   Note: The blade retains its balance if the same amount of material is removed from both cutting edges.

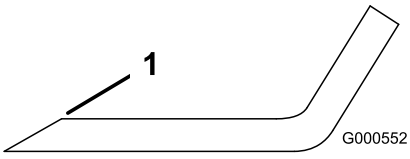

g000552

Figure 95

1. Sharpen at original angle.

2. Check the balance of the blade by putting it on a blade balancer (Figure 96).

   Note: If the blade stays in a horizontal position, the blade is balanced and can be used.

   Note: If the blade is not balanced, file some metal off the end of the sail area only (Figure 95).

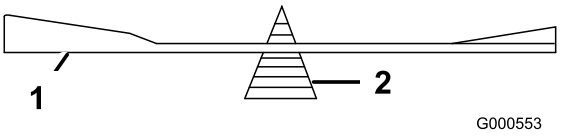

g000553

Figure 96

1. Blade
2. Balancer

3. Repeat this procedure until the blade is balanced.

Installing the Blades

1. Install the bushing through the blade with the bushing flange on the bottom (grass) side of the blade (Figure 97).

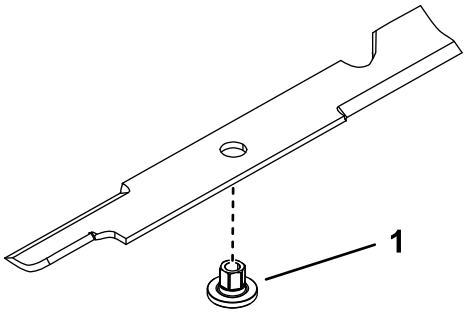

g255205

Figure 97

1. Bushing

2. Install the bushing/blade assembly into the spindle shaft (Figure 98).

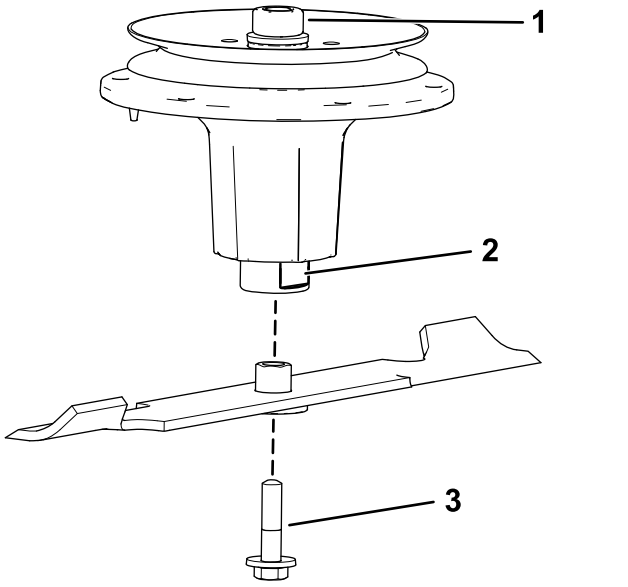

Figure 98

1. Top spindle nut
2. Flat of the spindle shaft
3. Blade bolt

3. Apply copper-based lubricant or grease to the threads of the blade bolt as needed to prevent seizing. Install the blade bolt finger-tight.
4. Place a wrench on the flat of the spindle shaft and torque the blade bolt to 75 to 81 N·m (55 to 60 ft-lb).

Leveling the Mower Deck

1. Park the machine on a level surface, disengage the blade-control switch (PTO), and engage the parking brake.
2. Shut off the engine, remove the key, and wait for all moving parts to stop before leaving the operating position.
3. Check the tire pressure in the drive tires; refer to Checking the Tire Pressure (page 48).
4. Position the transport lock in the latching position.
5. Push the deck-lift pedal all the way forward and the deck latches at the 14 cm (5-1/2 inches) transport position (Figure 99).

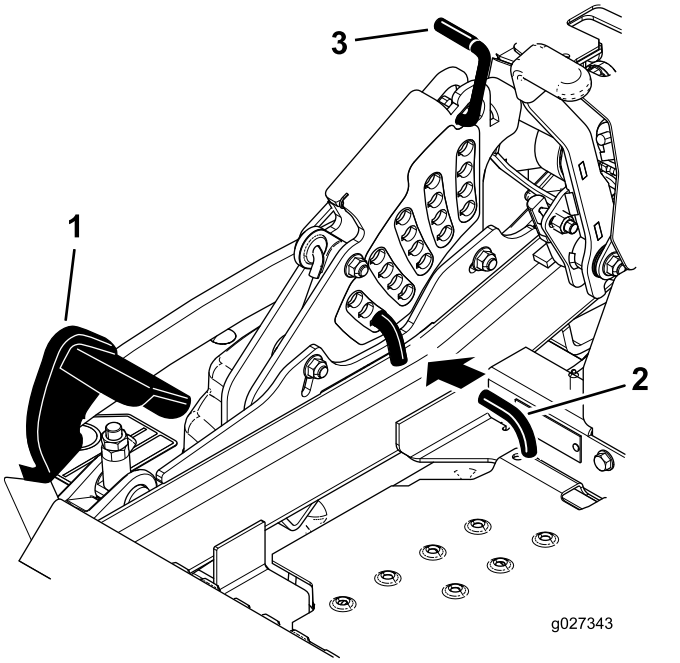

Figure 99

1. Deck-lift pedal
2. Height-of-cut pin
3. Transport lock

6. Insert the height-adjustment pin into the 7.6 cm (3 inches) cutting-height location.
7. Release the transport lock and allow the deck to lower to the cutting height.
8. Raise the discharge chute.
9. On both sides of the deck, measure from the level surface to the front tip of the blade (Postion A) as shown in Figure 100.

   Note: The measurement should read 7.6 mm (3 inches)

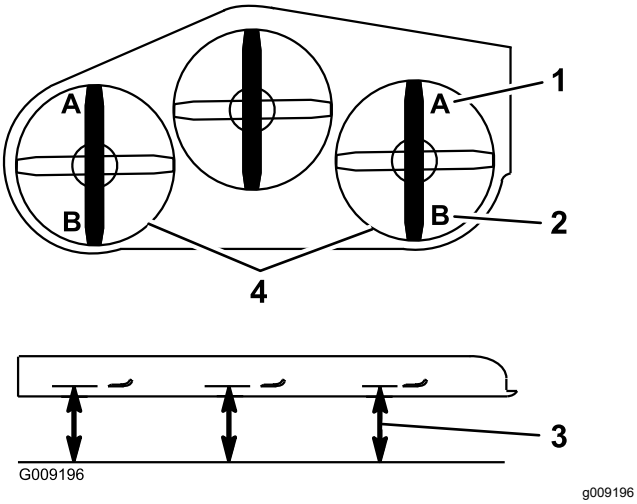

Figure 100

1. 7.6 cm (3 inch) at position A is correct
2. 8.3 cm (3-1/4 inch) at position B is correct
3. Measure here from the blade tip to the hard surface
4. Measure at position A and B on both sides

10. Fine-tune the adjustment nut on the front deck-lift assembly by turning it (Figure 101).

    Note: To increase the height, turn the adjustment nut clockwise; to decrease the height, turn the nut counterclockwise.

    Note: If the front deck links do not have enough adjustment to achieve accurate cut height, you can use the single-point adjustment to gain more adjustment.

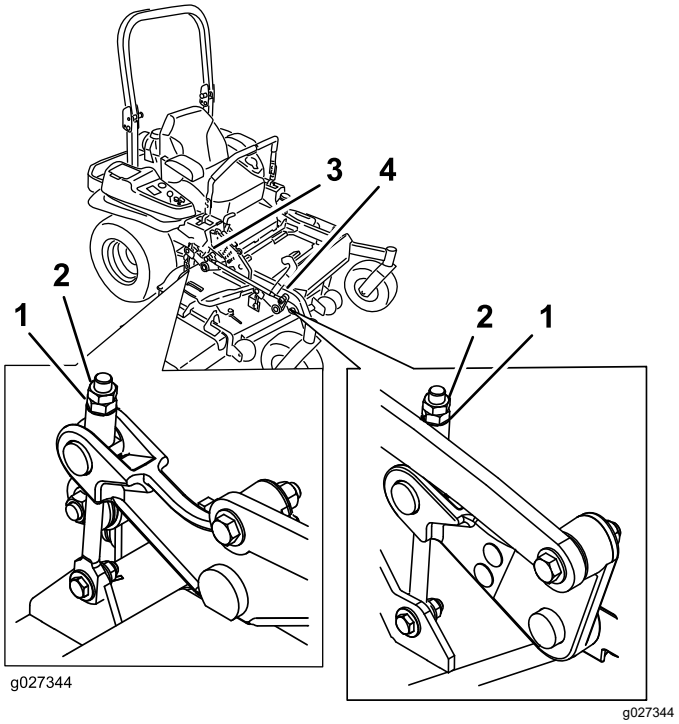

Figure 101

1. Adjustment nut
2. Jam nut
3. Rear deck adjustment
4. Front deck adjustment

11. To adjust the single-point system, loosen the 2 bolts at the bottom of the height-of-cut plate (Figure 102).

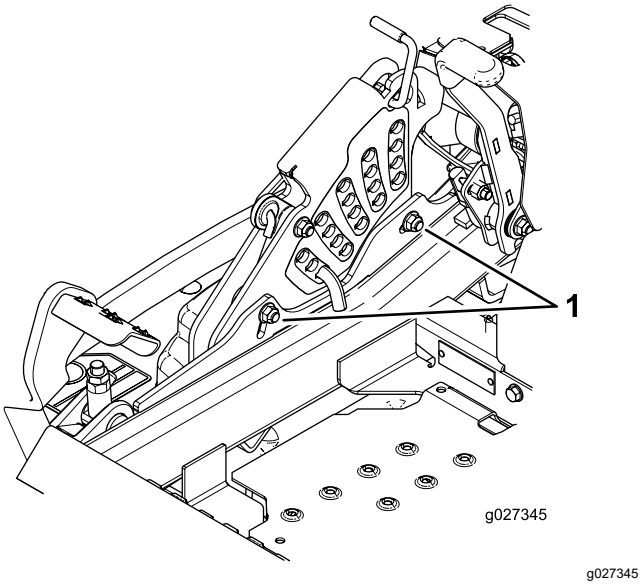

Figure 102

1. Bolts at the bottom of the height-of-cut plate

12. If the deck is too low, tighten the single-point-adjustment bolt by rotating it clockwise. If the deck is too high, loosen the single-point-adjustment bolt by rotating it counterclockwise (Figure 103).

Note: Loosen or tighten the single-point adjustment bolt enough to move the height-of-cut plate mounting bolts at least 1/3 the length of the available travel in their slots. This regains some up and down adjustment on each of the 4 deck links.

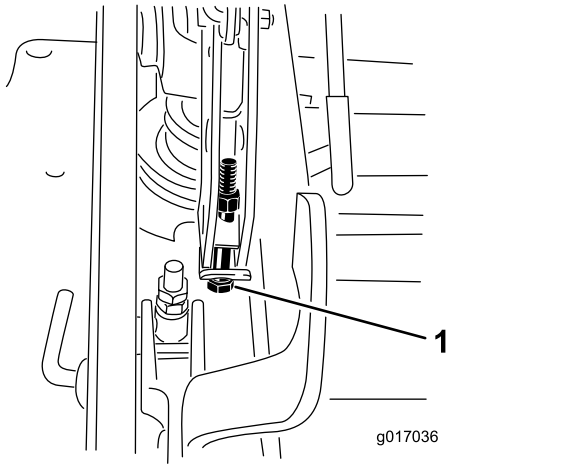

g017036

Figure 103

1. Single-point adjustment bolt

13. Tighten the 2 bolts at the bottom of the height-of-cut plate (Figure 102).

    Note: In most conditions, the back blade tip should be adjusted 6.4 mm (1/4 inch) higher than the front.

14. Torque the 2 bolts to 37 to 45 N·m (27 to 33 ft-lb).
15. On both sides of the deck, measure from the level surface to the back tip of the blade (postion B) as shown in Figure 100.

    Note: The measurement should read 8.3 cm (3-1/4 inches)

16. Fine tune the screw adjuster by turning it to get 8.3 mm (3-1/4 inches) height (Figure 101).

    To increase the height, turn the adjustment nut clockwise; to decrease, turn counterclockwise.

17. Measure until all 4 sides are the correct height.
18. Tighten all of the nuts on the deck-lift-arm assemblies.
19. Lower the discharge chute.

Removing the Mower Deck

Lock out the spring-loaded deck arms before servicing or removing the mower deck.

⚠ WARNING

Deck-lift arm assemblies have stored energy. Removing the deck with out releasing the stored energy can cause serious injury or death.

Do not attempt to disassemble the deck from the front frame without locking out the stored energy.

1. Park the machine on a level surface, disengage the blade-control switch (PTO), and engage the parking brake.
2. Shut off the engine, remove the key, and wait for all moving parts to stop before leaving the operating position.
3. Place the height adjustment pin in the 7.6 cm (3 inch) cutting-height location.

   Note: This locks the deck-lift arms in the lowest position when the deck is removed and the stored energy in the deck spring is released.

4. Remove the belt covers.
5. Remove the floor pan and insert a ratchet into the square hole in the deck idler (Figure 104).
6. Rotate the deck idler clockwise and remove the mower belt (Figure 104).

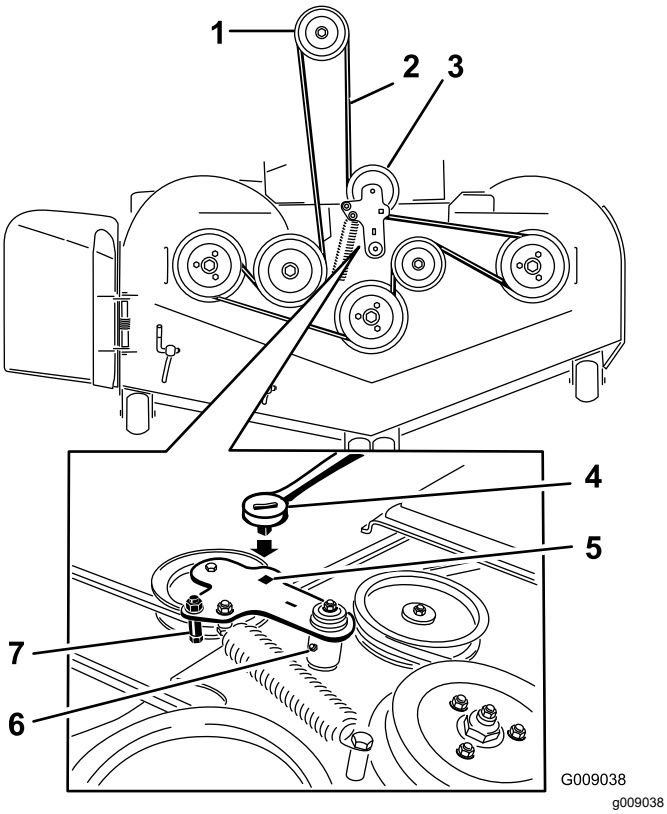

Figure 104

1. Clutch pulley
2. Mower belt
3. Spring-loaded idler pulley
4. Ratchet
5. Square hole in the idler arm for the ratchet
6. Idler grease fitting
7. Belt guide

7. Remove and retain the hardware on both sides of the deck as shown in Figure 105.

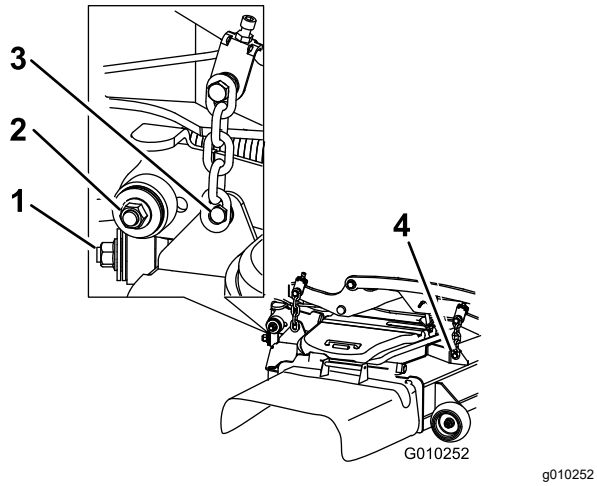

Figure 105

1. Right stabilizer
2. Deck strut (right side shown)
3. Remove the shoulder bolt and nut.
4. Remove the shoulder bolt and nut.

8. Raise the deck struts and secure them in the raised position.
9. Slide the deck out to the right side of the machine.

Replacing the Grass Deflector

⚠ WARNING

An uncovered discharge opening could allow the machine to throw objects toward you or bystanders, resulting in serious injury. Also, contact with the blade could occur.

Never operate the machine unless you install a mulch plate, discharge deflector, or grass collection system.

1. Remove the locknut, bolt, spring, and spacer holding the deflector to the pivot brackets (Figure 106).
2. Remove the damaged or worn grass deflector (Figure 106).

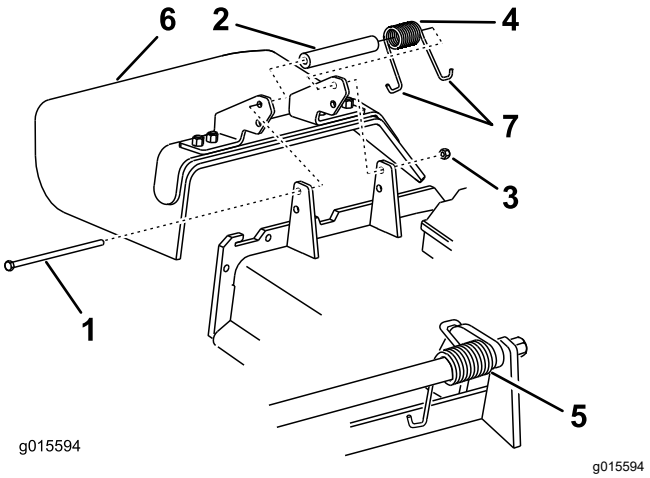

Figure 106

1. Bolt
2. Spacer
3. Locknut
4. Spring
5. Spring installed
6. Grass deflector
7. **J**-hook end of spring

3. Place the spacer and the spring onto grass deflector.
4. Place 1 **J**-hook end of the spring behind the deck edge.

   Note: Make sure that 1 **J**-hook end of the spring is installed behind the deck edge before installing the bolt as shown in Figure 106.
5. Install the bolt and the nut.

6. Place 1 **J**-hook end of the spring around the grass deflector (Figure 106).

   Important: **The grass deflector must be able to rotate. Lift the deflector up to the full open position and ensure that it rotates into the full down position.**

Cleaning

Cleaning under the Mower Deck

Service Interval: After each use

1. Park the machine on a level surface, disengage the blade-control switch (PTO), and engage the parking brake.
2. Shut off the engine, remove the key, and wait for all moving parts to stop before leaving the operating position.
3. Raise the mower deck to the TRANSPORT position.

Disposing of Waste

Engine oil, batteries, hydraulic fluid, and engine coolant are pollutants to the environment. Dispose of these according to your state and local regulations.

Storage

Storage Safety

- Shut off the engine, remove the key, and wait for all moving parts to stop before you leave the operator's position. Allow the machine to cool before adjusting, servicing, cleaning, or storing it.
- Do not store the machine or fuel near flames or drain the fuel indoors or inside an enclosed trailer.
- Do not store the machine or fuel container where there is an open flame, spark, or pilot light, such as on a water heater or on other appliances.

Cleaning and Storage

1. Disengage the blade-control switch (PTO), and engage the parking brake.
2. Shut off the engine, remove the key, and wait for all moving parts to stop before leaving the operating position.
3. Remove grass clippings, dirt, and grime from the external parts of the entire machine, especially the engine and hydraulic system. Clean dirt and chaff from the outside of the engine cylinder head fins and blower housing.

   Important: **You can wash the machine with mild detergent and water. Do not pressure wash the machine. Avoid excessive use of water, especially near the control panel, engine, hydraulic pumps, and motors.**
4. Check the parking brake operation; refer to Adjusting the Parking Brake (page 52).
5. Service the air cleaner; refer to Servicing the Air Cleaner (page 37).
6. Grease the machine; refer to Lubrication (page 34).
7. Change the crankcase oil; refer to Servicing the Engine Oil (page 39).
8. Check the tire pressure; refer to Checking the Tire Pressure (page 48).
9. Change the hydraulic filters; refer to Changing the Hydraulic Fluid and Filters (page 59).
10. Charge the battery; refer to Charging the Battery (page 45).
11. Scrape any heavy buildup of grass and dirt from the underside of the mower, then wash the mower with a garden hose.

    Note: Run the machine with the blade-control switch (PTO) engaged and the engine at high idle for 2 to 5 minutes after washing.
12. Check the condition of the blades; refer to Servicing the Cutting Blades (page 60).
13. Prepare the machine for storage when non-use occurs over 30 days. Prepare the machine for storage as follows:

    A. Add a petroleum-based stabilizer/conditioner to fuel in the tank. Follow mixing instructions from the stabilizer manufacturer. Do not use an alcohol-based stabilizer (ethanol or methanol).

    Note: A fuel stabilizer/conditioner is most effective when mixed with fresh fuel and used at all times.

    B. Run the engine to distribute conditioned fuel through the fuel system for 5 minutes.

    C. Shut off the engine, allow it to cool, and drain the fuel tank.

    D. Start the engine and run it until it stops.

    E. Dispose of fuel properly. Recycle the fuel according to local codes.

    Important: **Do not store fuel containing stabilizer/conditioner longer than the duration recommended by the fuel-stabilizer manufacturer.**
14. Remove and check the condition of the spark plug(s); refer to Servicing the Spark Plug (page 41). With the spark plug(s) removed from the engine, pour 30 ml (2 tablespoons) of engine oil into the spark plug hole. Use the starter to crank the engine and distribute the oil inside the cylinder. Install the spark plug(s). Do not install the wire on the spark plug(s).
15. Check and tighten all bolts, nuts, and screws. Repair or replace any part that is damaged.
16. Paint all scratched or bare metal surfaces. Paint is available from your Authorized Service Dealer.
17. Store the machine in a clean, dry garage or storage area. Remove the key from the switch and keep it out of reach of children or other unauthorized users. Cover the machine to protect it and keep it clean.

Troubleshooting

Problem	Possible Cause	Corrective Action
The oil-temperature light is on and the engine rpm is low.	1. The engine-control unit has limited engine rpm, known as “limp” mode.	1. Check the engine-oil level. If the level is above the “add” line, contact an Authorized Toro Service Dealer.
The oil-pressure light is on and the engine rpm is low.	1. The engine-control unit has limited engine rpm, known as “limp” mode.	1. Let the engine cool and check the engine-oil level. If the level is above the “add” line, contact an Authorized Toro Service Dealer.
The LED status light comes on.	1. The engine is too hot. 2. There is old fuel in the fuel tank. 3. The fuel-shutoff valve is not open completely. 4. The air cleaner is dirty. 5. The battery is not charged. 6. Incorrect fuel filters are being used or the fuel filters are dirty. 7. The connections to the sensors electronic-control unit (ECU) and fuel injectors are not secured properly. 8. There is low voltage from the battery. 9. A fuse is blown.	1. Shut off the engine and let it cool. 2. Use new fuel. 3. Open the fuel-shutoff valve. 4. Make sure that the air cleaner and precleaner are clean. Replace if necessary. 5. Charge or replace the battery. 6. Contact an Authorized Service Dealer. 7. Contact an Authorized Service Dealer. 8. Ensure that you are using a good 12 V battery and that it is fully charged. 9. Check and replace any blown fuses.
The starter does not crank.	1. The blade-control switch is engaged. 2. The parking brake is disengaged. 3. The motion-control levers are not in the NEUTRAL-LOCK position. 4. You are not sitting in the operator’s seat. 5. The battery is dead. 6. The electrical connections are corroded or loose. 7. A fuse is blown. 8. A relay or switch is damaged.	1. Disengage the blade-control switch. 2. Engage the parking brake. 3. Move the motion-control levers outward to the NEUTRAL-LOCK position. 4. Sit on the operator’s seat. 5. Charge the battery. 6. Check the electrical connections for good contact. 7. Replace the fuse. 8. Contact an Authorized Service Dealer.

Problem	Possible Cause	Corrective Action
The engine does not start, starts hard, or fails to keep running.	1. The fuel tank is empty. 2. The fuel-shutoff valve is closed. 3. The oil level in the crankcase is low. 4. The throttle is not in the correct position. 5. There is dirt in the fuel filter. 6. Dirt, water, or stale fuel is in fuel system. 7. The air cleaner is dirty. 8. The seat switch is not functioning properly. 9. The electrical connections are corroded, loose, or damaged. 10. The relay or switch is worn or damaged. 11. The spark plug is fouled or improperly gapped. 12. The spark-plug wire is not connected.	1. Fill the fuel tank. 2. Open the fuel-shutoff valve. 3. Add oil to the crankcase. 4. Be sure that the throttle control is midway between the slow and fast positions. 5. Replace the fuel filter. 6. Contact an Authorized Service Dealer. 7. Clean or replace the air-cleaner element. 8. Check the seat-switch indicator. Replace the seat if necessary. 9. Check the electrical connections for good contact. Clean the connector terminals thoroughly with electrical-contact cleaner, apply dielectric grease, and make the appropriate connections. 10. Contact an Authorized Service Dealer. 11. Adjust or replace the spark plug. 12. Check the spark-plug wire connection.
The engine loses power.	1. The engine load is excessive. 2. The air cleaner is dirty. 3. The oil level in the crankcase is low. 4. The cooling fins and the air passages above the engine are plugged. 5. The vent hole in the fuel cap is plugged. 6. There is dirt in the fuel filter. 7. There is dirt, water, or stale fuel in the fuel system.	1. Reduce the ground speed. 2. Clean the air-cleaner element. 3. Add oil to the crankcase. 4. Remove the obstruction from the cooling fins and the air passages. 5. Clean or replace the fuel cap. 6. Replace the fuel filter. 7. Contact an Authorized Service Dealer.
The engine overheats.	1. The engine load is excessive. 2. The oil level in the crankcase is low. 3. The cooling fins and air passages under the engine-blower housing are plugged. 4. The air cleaner is dirty. 5. Dirt, water, or stale fuel is in the fuel system.	1. Reduce the ground speed. 2. Add oil to the crankcase. 3. Remove the obstruction from the cooling fins and air passages. 4. Clean or replace the air-cleaner element. 5. Contact an Authorized Service Dealer
The machine pulls to the left or right (with levers fully forward)	1. The tracking needs adjustment 2. The tire pressure in the drive tires is not correct.	1. Adjust the tracking. 2. Adjust the tire pressure in the drive tires.
The machine does not drive.	1. The bypass valves are not closed tight. 2. The pump belt is worn, loose, or broken. 3. The pump belt is off a pulley. 4. The idler spring is broken or missing. 5. The hydraulic fluid level is low or too hot.	1. Tighten the bypass valves. 2. Change the belt. 3. Change the belt. 4. Replace the spring. 5. Add hydraulic fluid to the reservoirs or let it cool down.

Problem	Possible Cause	Corrective Action
The machine vibrates abnormally.	1. The cutting blade(s) is/are bent or unbalanced.	1. Install new cutting blade(s).
	2. The blade mounting bolt is loose.	2. Tighten the blade mounting bolt.
	3. The engine mounting bolts are loose.	3. Tighten the engine mounting bolts.
	4. The engine pulley, idler pulley, or blade pulley is loose.	4. Tighten the appropriate pulley.
	5. The engine pulley is damaged.	5. Contact an Authorized Service Dealer.
	6. The blade spindle is bent.	6. Contact an Authorized Service Dealer.
	7. The motor mount is loose or worn.	7. Contact an Authorized Service Dealer.
The cutting height is uneven.	1. The blade(s) is not sharp.	1. Sharpen the blade(s).
	2. A cutting blade(s) is/are bent.	2. Install a new cutting blade(s).
	3. The mower is not level.	3. Level the mower from side-to-side and front-to-rear.
	4. An anti-scalp roller (if applicable) is not set correctly.	4. Adjust the anti-scalp wheel height.
	5. The underside of the mower deck is dirty.	5. Clean the underside of the mower deck.
	6. The tire pressure is incorrect.	6. Adjust the tire pressure.
	7. A blade spindle is bent.	7. Contact an Authorized Service Dealer.
The blades do not rotate.	1. The mower deck belt is damaged, worn, loose, or broken.	1. Install a new deck belt.
	2. The mower deck belt is off the pulley.	2. Install the mower belt on the deck pulley and check the idler pulley, idler arm, and spring for correct position and function.
	3. The pump drive belt is worn, loose, or broken.	3. Check the belt tension or install a new belt.
	4. The idler spring is broken or missing.	4. Replace the spring.
The clutch does not engage.	1. The fuse is blown.	1. Replace the fuse. Check the coil resistance, battery charge, charging system, and wiring connections, and replace components if necessary.
	2. There is low voltage supply at the clutch.	2. Check the coil resistance, battery charge, charging system, and wiring connections and replace parts if necessary.
	3. The coil is damaged.	3. Replace the clutch.
	4. There is inadequate current supply.	4. Repair or replace the clutch lead wire or electrical system. Clean the connector contacts.
	5. The rotor/armature air gap is too large.	5. Remove the shim or replace the clutch.

Schematics

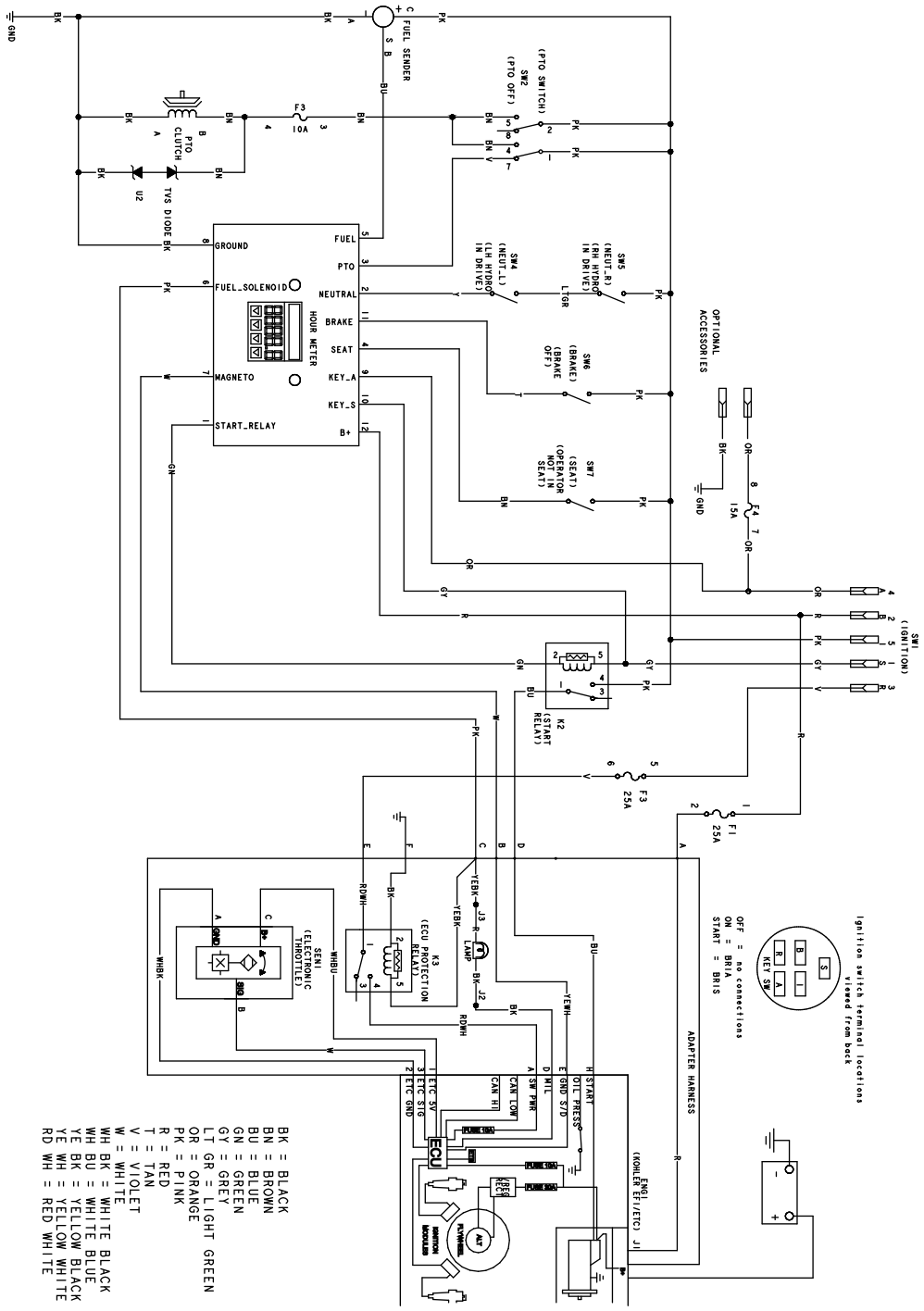

g522591

Electrical Schematic—Kohler Engine with Electronic Throttle (Rev. A)

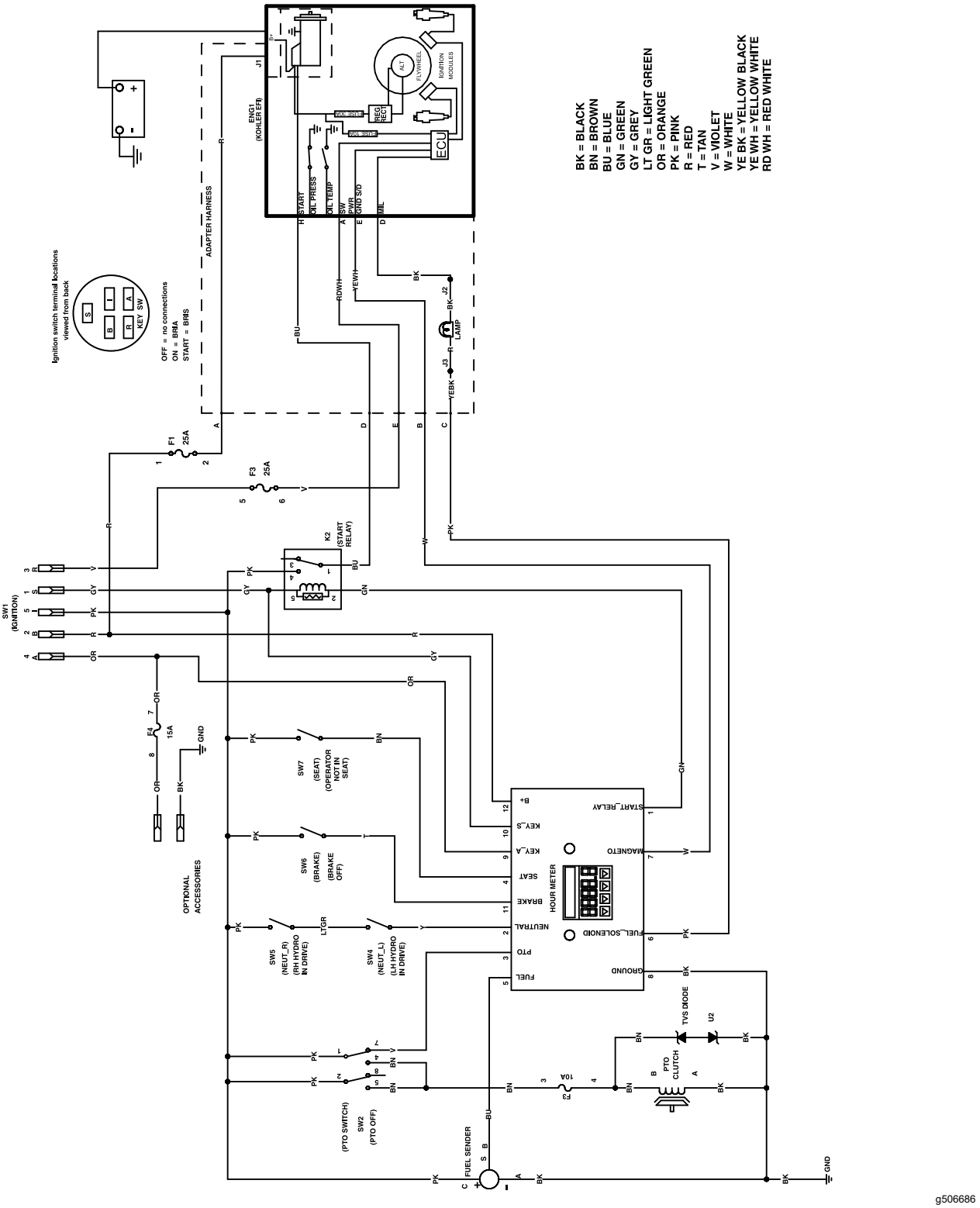

g506686

Electrical Schematic—Kohler Engine without Electronic Throttle (Rev. A)

Notes:

California Proposition 65 Warning Information

What is this warning?

You may see a product for sale that has a warning label like the following:



WARNING: Cancer and Reproductive Harm—www.p65Warnings.ca.gov.

What is Prop 65?

Prop 65 applies to any company operating in California, selling products in California, or manufacturing products that may be sold in or brought into California. It mandates that the Governor of California maintain and publish a list of chemicals known to cause cancer, birth defects, and/or other reproductive harm. The list, which is updated annually, includes hundreds of chemicals found in many everyday items. The purpose of Prop 65 is to inform the public about exposure to these chemicals.

Prop 65 does not ban the sale of products containing these chemicals but instead requires warnings on any product, product packaging, or literature with the product. Moreover, a Prop 65 warning does not mean that a product is in violation of any product safety standards or requirements. In fact, the California government has clarified that a Prop 65 warning "is not the same as a regulatory decision that a product is 'safe' or 'unsafe.'" Many of these chemicals have been used in everyday products for years without documented harm. For more information, go to https://oag.ca.gov/prop65/faqs-view-all.

A Prop 65 warning means that a company has either (1) evaluated the exposure and has concluded that it exceeds the "no significant risk level"; or (2) has chosen to provide a warning based on its understanding about the presence of a listed chemical without attempting to evaluate the exposure.

Does this law apply everywhere?

Prop 65 warnings are required under California law only. These warnings are seen throughout California in a wide range of settings, including but not limited to restaurants, grocery stores, hotels, schools, and hospitals, and on a wide variety of products. Additionally, some online and mail order retailers provide Prop 65 warnings on their websites or in catalogs.

How do the California warnings compare to federal limits?

Prop 65 standards are often more stringent than federal and international standards. There are various substances that require a Prop 65 warning at levels that are far lower than federal action limits. For example, the Prop 65 standard for warnings for lead is 0.5 µg/day, which is well below the federal and international standards.

Why don't all similar products carry the warning?

- Products sold in California require Prop 65 labelling while similar products sold elsewhere do not.
- A company involved in a Prop 65 lawsuit reaching a settlement may be required to use Prop 65 warnings for its products, but other companies making similar products may have no such requirement.
- The enforcement of Prop 65 is inconsistent.
- Companies may elect not to provide warnings because they conclude that they are not required to do so under Prop 65; a lack of warnings for a product does not mean that the product is free of listed chemicals at similar levels.

Why does Toro include this warning?

Toro has chosen to provide consumers with as much information as possible so that they can make informed decisions about the products they buy and use. Toro provides warnings in certain cases based on its knowledge of the presence of one or more listed chemicals without evaluating the level of exposure, as not all the listed chemicals provide exposure limit requirements. While the exposure from Toro products may be negligible or well within the "no significant risk" range, out of an abundance of caution, Toro has elected to provide the Prop 65 warnings. Moreover, if Toro does not provide these warnings, it could be sued by the State of California or by private parties seeking to enforce Prop 65 and subject to substantial penalties.



Count on it.