Form No. 3350–783

Debris Blower 800

Model No. 44537—Serial No. 240000001 and Up

Operator’s Manual

Contents

Contents 2
Introduction 2
Safety 3
- Before Operating 3
- While Operating 3
- Maintenance 3
- Safety and Instruction Decals 4

Specifications 7
- General Specifications 7

Setup 8
- Activating the Battery 8
- Mount Debris Blower To Tow Vehicle 9
- Removing Debris Blower From Tow Vehicle . . . 11
- Greasing The Blower 11

Before Operating 12
- Checking the Oil Level 12
- Fill Fuel Tank 12
- Check Tire Pressure 12

Operation 13
- Controls 13
- Starting Instructions 14
- Adjusting Discharge Direction 14
- Operating Tips 14

Maintenance 15
- Greasing the Blower 15
- Servicing the Air Cleaner 15
- Servicing the Engine Oil 17
- Adjusting The Blower Belt 18
- Servicing the Battery 19
- Servicing the Spark Plugs 20
- Replacing the Fuel Filter 20
- Draining the Fuel Tank 21

Troubleshooting 22
Cleaning and Storage 23
The Toro General Commercial Products Warranty . . 24

Introduction

Read this manual carefully to learn how to operate and maintain your product properly. The information in this manual can help you and others avoid injury and product damage. Although Toro designs and produces safe products, you are responsible for operating the product properly and safely.

Whenever you need service, genuine Toro parts, or additional information, contact an Authorized Service Dealer or Toro Customer Service and have the model and serial numbers of your product ready. The two numbers are stamped on a plate which is located on the rear of blower housing.

Write the product model and serial numbers in the space below:

Model No. _____

Serial No. _____

This manual identifies potential hazards and has special safety messages that help you and others avoid personal injury and even death. ***Danger***, ***Warning***, and ***Caution*** are signal words used to identify the level of hazard. However, regardless of the hazard, be extremely careful.

Danger signals an extreme hazard that *will* cause serious injury or death if you do not follow the recommended precautions.

Warning signals a hazard that *may* cause serious injury or death if you do not follow the recommended precautions.

Caution signals a hazard that may cause minor or moderate injury if you do not follow the recommended precautions.

This manual uses two other words to highlight information. **Important** calls attention to special mechanical information and **Note:** emphasizes general information worthy of special attention.

© 2001 by The Toro Company

8111 Lyndale Avenue South
Bloomington, MN 55420-1196

All Rights Reserved

Printed in the USA

Safety

Hazard control and accident prevention are dependent upon the awareness, concern, and proper training of the personnel involved in the operation, transport, maintenance, and storage of the machine. Improper use or maintenance of the machine can result in injury or death. To reduce the potential for injury or death, comply with the following safety instructions.

Before Operating

- Read and understand the contents of this Operator's Manual before operating the machine. Become familiar with all of the controls and know how to stop quickly. A free replacement manual is available by sending the complete Model and Serial Number to The Toro Company, 8111 Lyndale Avenue South, Bloomington, Minnesota 55420-1196.
- Never allow children to operate the machine. Do not allow adults to operate machine without proper instruction. Only trained operators who have read this manual should operate this machine.
- Never operate the machine when under the influence of drugs or alcohol.
- Keep all bystanders away from the operating area.
- Keep all shields and safety devices in place. If a shield, safety device, or decal is illegible or damaged, repair or replace it before operation is commenced. Also tighten any loose nuts, bolts, and screws to ensure that the machine is in safe operating condition.
- Do not operate the machine while wearing sandals, tennis shoes, sneakers, or shorts. Also, do not wear loose fitting clothing which could get caught in moving parts. Always wear long pants and substantial shoes. Wearing safety glasses, safety shoes, and a helmet is advisable and required by some local ordinances and insurance regulations.

While Operating

- This product may exceed noise levels of 85 dB(A) at the operator position. Ear protectors are recommended for prolonged exposure to reduce the potential of permanent hearing damage.
- Using the machine demands attention. To prevent loss of control:
  - Operate only in daylight or when there is good artificial light.
  - Drive slowly and watch for holes or other hidden hazards.
  - Do not drive close to a sand trap, ditch, creek, or other hazard.
  - Reduce your speed when making sharp turns and when turning on hillsides.
  - Avoid sudden starts and stops.
  - Before backing up, look to the rear and ensure that no one is behind the machine.
  - Watch out for traffic when near or crossing roads. Always yield the right-of-way.
- Stay away from the discharge opening when the machine is operating. Keep all bystanders away from the discharge opening and don't direct discharge toward bystanders.
- If the engine stalls or the machine loses headway and cannot make it to the top of a slope, do not turn the machine around. Always back slowly straight down the slope.
- **Do not take an injury risk!** When a person or pet appears unexpectedly in or near the operating area, **stop operation**. Careless operation, combined with terrain angles, ricochets, or improperly positioned guards can lead to thrown object injuries. Do not resume operation until the area is cleared.

Maintenance

- Remove the key from the ignition switch to prevent accidental starting of the engine when servicing, adjusting, or storing the machine.
- Perform only those maintenance instructions described in this manual. If major repairs are ever needed or assistance is desired, contact an Authorized Toro Distributor.
- Be sure that the machine is in safe operating condition by keeping nuts, bolts, and screws tight. Check all bolts and nuts frequently to be sure that they are tightened to specification.
- To ensure optimum performance and safety, always purchase genuine Toro replacement parts and accessories to keep the machine all Toro. **Never use "will-fit" replacement parts and accessories made by other manufacturers.** Look for the Toro logo to ensure genuineness. Using unapproved replacement parts and accessories could void the warranty.

Safety and Instruction Decals

Safety decals and instructions are easily visible to the operator and are located near any area of potential danger. Replace any decal that is damaged or lost.



98-3110

1. Danger–See Operator's Manual
2. Danger–Wear ear protection
3. Thrown object hazard–Keep bystanders away.
4. Always wear eye protection
5. Cutting hazard to hands or feet–wait until all machine components have stopped before touching them.

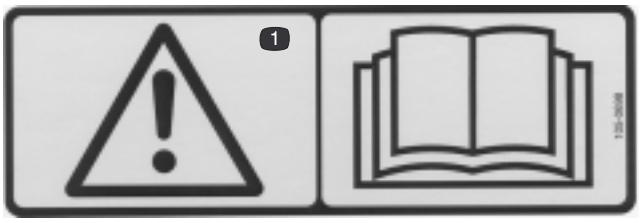

105–0698

1. Danger–See Operator's Manual

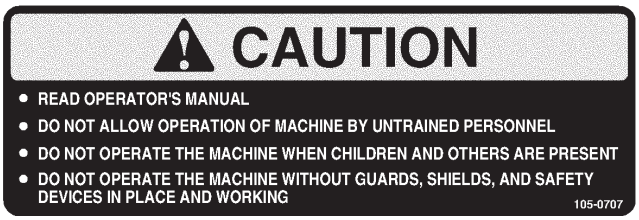

105-0707

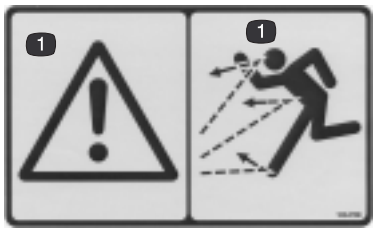

105–0708

1. Danger–Blown object hazard–Keep bystanders away from chute outlet.

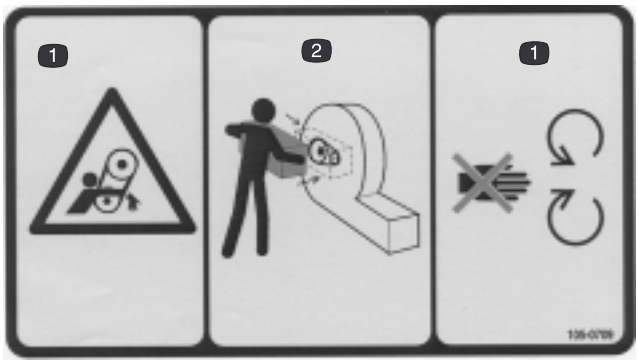

105–0709

1. Stay away from moving parts.
2. Do not operate with out belt shield in place.

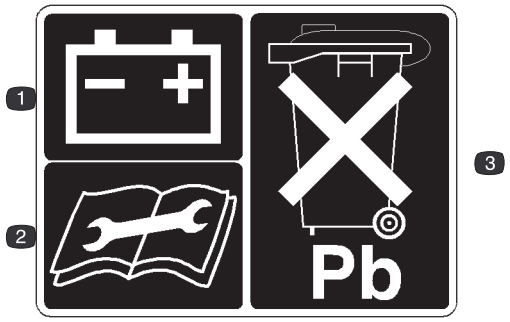

93-6668

1. Battery
2. Read the instructions before servicing or performing maintenance.
3. Contains lead; do not discard.

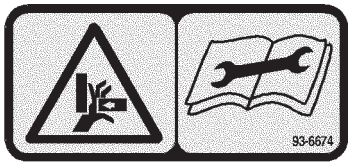

93-6674

1. Crushing hazard, hand—read the instructions before servicing or performing maintenance.

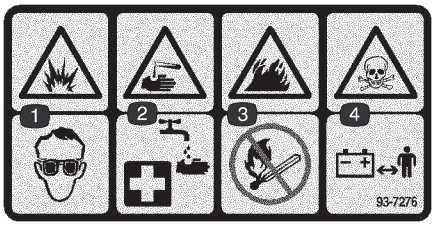

93-7276

1. Explosion hazard—wear eye protection.
2. Caustic liquid/chemical burn hazard—to perform first aid, flush with water.
3. Fire hazard—no fire, open flames, or smoking.
4. Poison hazard—keep children a safe distance from the battery.

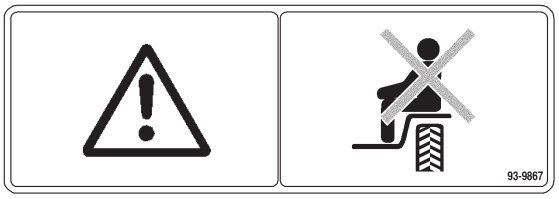

93-9867

1. Warning—do not carry passengers.

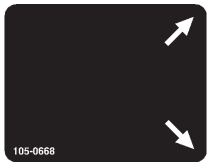

105-0668



105-0669

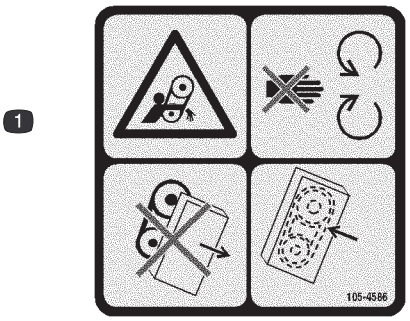

105-4586

1. Entanglement hazard, belt—stay away from moving parts. Do not operate the machine with the shields or guards removed; keep the shields and guards in place.



106-0253

1. Do not step here

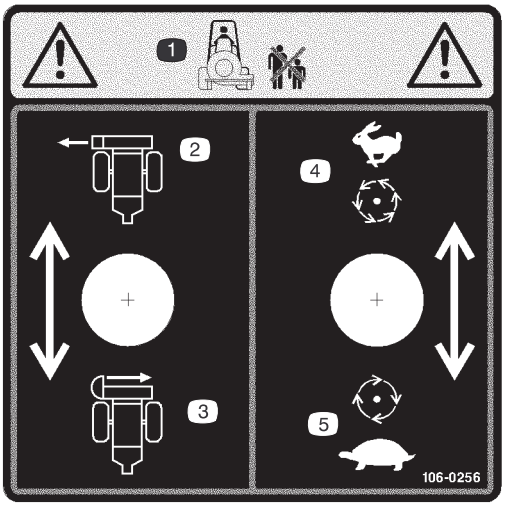

106-0256

1. Warning—keep bystanders a safe distance from the machine.
2. Blow left
3. Blow right
4. Fast blower speed
5. Slow blower speed

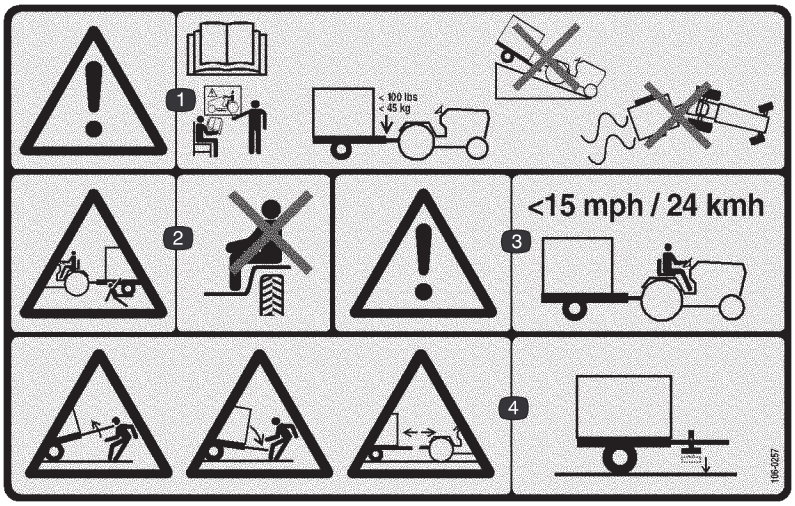

106-0257

1. Warning—read the *Operator's Manual* and receive training. Maximum load is 100 lb (45 kg) tongue weight. Do not drive the vehicle with a trailer down hill. Do not lose control of the vehicle and trailer.
2. Crushing/dismemberment hazard of bystanders—do not carry passengers.
3. Warning—do not exceed 15 mph (24 kmh).
4. Stored energy hazard, trailer—do not disconnect the trailer without first putting down the jack.

Specifications

General Specifications

General Description	An upper mid sized debris blower with self–contained power. It is compactly packaged and easily towed by most utility vehicles. The fan can be lowered for highly effective air delivery at turf level or raised for transport.
Frame	One piece welded steel frame with greasable pivot points
Suspension	1500 lb. Torflex axle. 5–bolt, 4.5 inch bolt circle hubs
Wheels and Tires	Stamped and welded steel wheels. Titan Turf Trac tires 20 x 10.00–8, 4 ply.
Hitch	Telescoping for various towing accommodations. Adjustable for various hitch heights.
Motor	23 HP Kohler Command Pro V–Twin electric start, air cooled, gas engine. Full pressure lubricated, oil filter and 4 pint cap. 15 amp. alternator. Screened air intake. Remote electric solenoid throttle control.
Fuel Tank	Capacity is 7 gallons
Fan Impeller	.250 HRPO plate Radial design with 8 blades Outer diameter 24 inches $\pm$ .5 inch Width 6 1/2 inches $\pm$ 1–1/4 inch Weight 45 lbs. $\pm$ 2 lbs.
Fan Housing	Split house – upper housing and lower housing Upper housing – 12 ga. HRPO front and rear plates flanged at separation seam with 12 ga. HRPO rolled and flanged blower band with increasing radius from cutoff point Lower housing – 10 ga. HRPO front and rear plates flanged at separation seam with 12 ga. HRPO roller and flanged blower band with increasing radius to exhaust Inside housing clearance 7 inches $\pm$ 1/4 inch
Fan Speed	2000 RPM $\pm$ 50 RPM
Outlet Area	70 square inches
Fan Output	6500 CFM $\pm$ 500 CFM 155 MPH $\pm$ 20 MPH
Directional Control	Deflector chute for 180 degree diversion as standard. Remotely controlled with an electric actuator
Turf Protection	Skid plate
Drive	Belt drive 4–3VX Drive ratio: 1.78:1 Love joy torsion type belt tightener
Weight:	730 lbs. $\pm$ 50 lbs.

Note: Specifications and design subject to change without notice.

Setup

Note: Use this chart as a checklist to ensure that all parts have been received. Without these parts, total setup cannot be completed.

Description	Qty.	Use
Hitch Assembly	1	Mount to debris blower
Operator's Manual	1	Read before operating the machine.
Parts Catalog	1	
Registration card	1	Fill out and return to Toro.

Note: Determine the left and right sides of the machine from the normal operating position.

Activating the Battery

Warning

Battery posts, terminals, and related accessories contain lead and lead compounds, chemicals known to the State of California to cause cancer and reproductive harm. *Wash hands after handling.*

The factory ships the debris blower with a dry battery. Purchase bulk electrolyte with 1.260 specific gravity from a local battery supply outlet.

1. Remove (6) bolts and washers securing battery cover to chassis (Fig. 1).

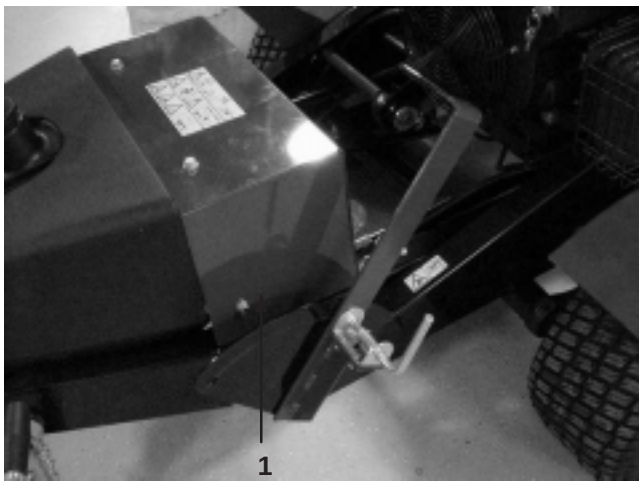

Figure 1

1. Battery cover

2. Remove the wing nuts, rods and battery holddown securing battery to blower chassis (Fig. 2).

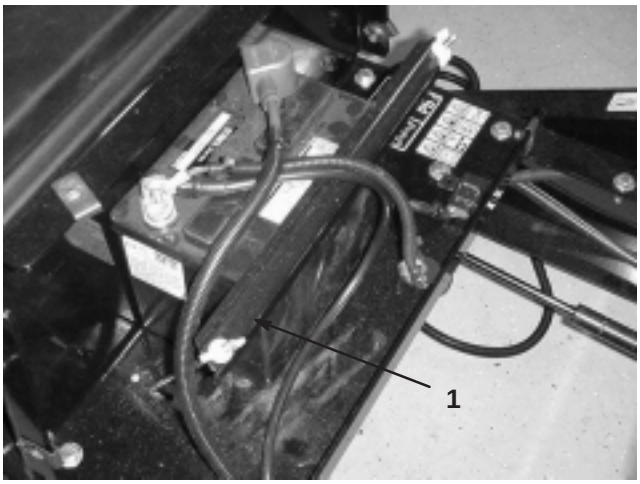

Figure 2

1. Battery holddown

3. Lift the battery out of the chassis.

Danger

Battery electrolyte contains sulfuric acid which is a deadly poison and causes severe burns.

- **Do not drink electrolyte and avoid contact with skin, eyes or clothing. Wear safety glasses to shield your eyes and rubber gloves to protect your hands.**
- **Fill the battery where clean water is always available for flushing the skin.**

4. Remove filler caps from the battery.

5. Slowly pour electrolyte into each cell until the electrolyte level is up to the lower part of the tube (Fig. 3).

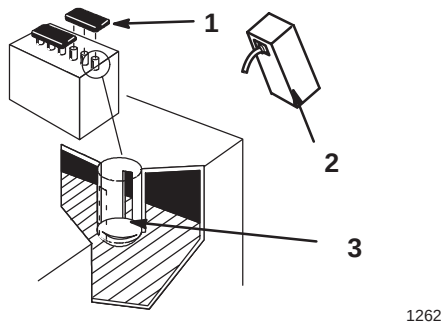

Figure 3

1. Filler caps
2. Electrolyte
3. Lower part of the tube

6. Leave the covers off and connect a 3 to 4 amp battery charger to the battery posts (Fig. 4).

7. Charge the battery at a rate of 4 amperes or less for 4 hours (12 volts).

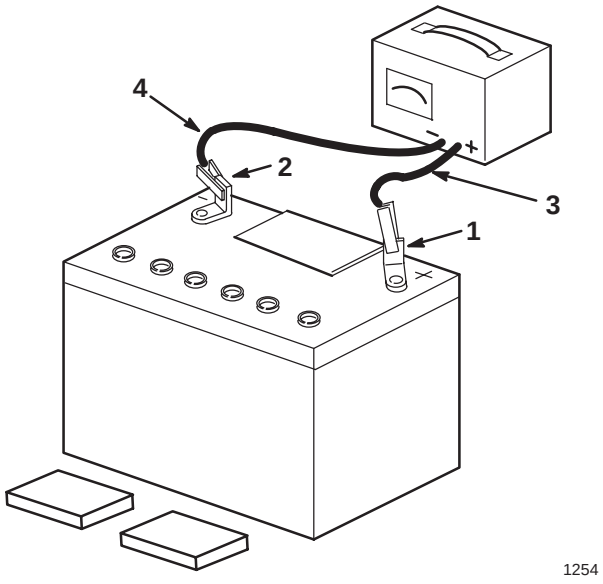

Figure 4

1. Positive post
2. Negative post
3. Charger red (+) wire
4. Charger black (–) wire

Warning

Charging the battery produces gasses that can explode.

Never smoke near the battery and keep sparks and flames away from battery.

8. When the battery is fully charged, disconnect the charger from the electrical outlet and from the negative and positive battery posts (Fig. 4).

9. Slowly pour electrolyte into each cell until the level is once again up to the upper line on the battery case (Fig. 3) and install covers.

10. Install the battery into the chassis (Fig. 2).

11. Secure the battery in the chassis with the battery holddown, rods, and wing nuts (Fig. 2).

12. Using the bolt and wing nut supplied with the battery, connect the positive (red) cable to the positive (+) battery post (Fig. 2). Slide the rubber cover over the battery post.

13. Using the bolt and wing nut supplied with the battery, connect the negative (black) cable to the negative (–) battery post (Fig. 2).

Note: Ensure that the battery cables do not contact any sharp edges or each other.

Warning

Connecting cables to the wrong post could result in personal injury and/or damage to the electrical system. Make sure battery or cables do not interfere or rub on any moving or hot parts.

Mount Debris Blower To Tow Vehicle

To assure proper operation, make sure debris blower frame is parallel with the ground.

1. Position debris blower on a flat, level surface.

2. Insert jack onto frame pin and secure with pin (Fig. 5).

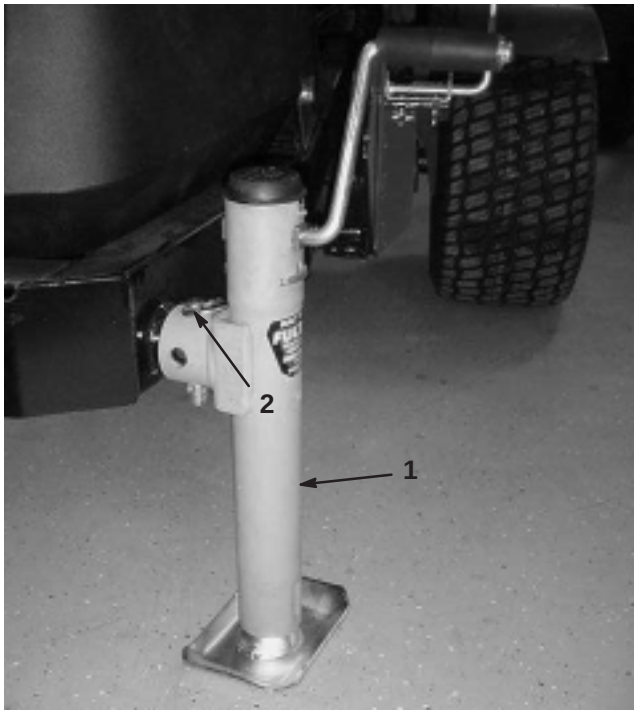

Figure 5

1. Jack
2. Pin

3. Adjust jack height until blower frame is parallel with the ground.

4. Insert hitch tube into frame tube (Fig. 6). Secure tube to frame with a clevis pin and hair pin cotter.

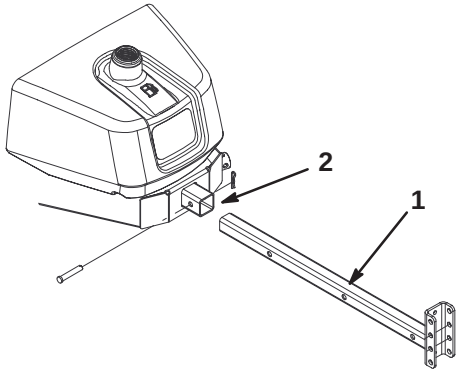

Figure 6

1. Hitch tube
2. Frame tube

5. Back tow vehicle up to blower.

6. Adjust blower hitch clevis to same level as tractor hitch as follows:

- Remove bolts and locknuts securing hitch clevis (Fig. 7) to hitch tube.

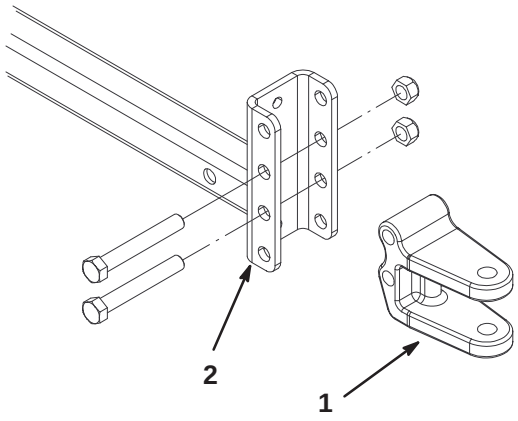

Figure 7

1. Hitch clevis
2. Hitch tube

- Raise or lower hitch clevis to position approximately level with tow vehicle hitch.
- Secure with bolts and locknuts previously removed.

7. Remove clevis pin and hair pin cotter securing hitch tube to frame tube (Fig. 8).

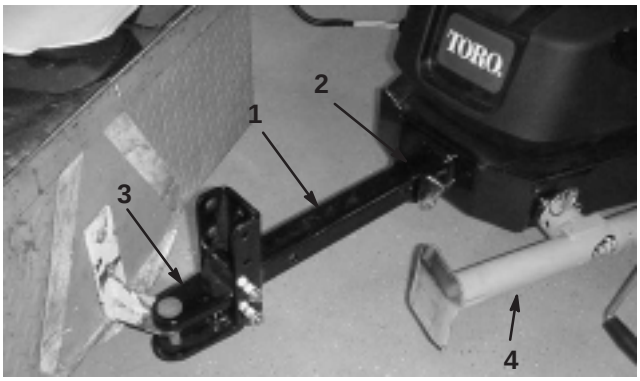

Figure 8

1. Hitch tube
2. Frame tube
3. Hitch clevis
4. Jack –storage position

8. Adjust hitch tube length to assure blower does not contact tow vehicle when turning.

9. Secure with clevis pin and hair pin cotter.

10. Connect tow vehicle hitch to debris blower clevis hitch with hitch pin and clevis.

11. Remove jack pin, rotate jack upward and reconnect to frame pin for storage.

Removing Debris Blower From Tow Vehicle

1. Park debris blower on a level surface and block wheels.

Caution

Before leaving the operator's seat on the tow vehicle, wait for the engine and all moving parts to stop.

2. Remove jack pin, rotate jack down ward and reconnect to frame pin.

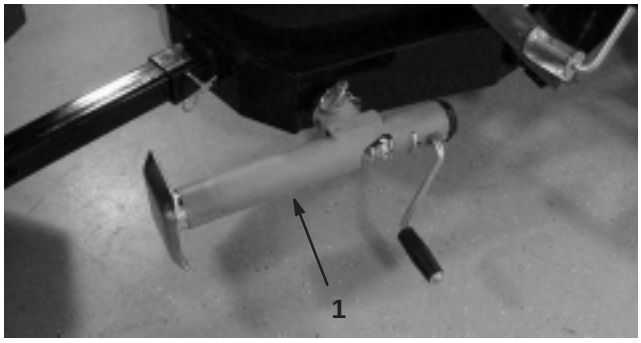

Figure 9

1. Jack

3. Raise debris blower with jack until hair pin cotter and hitch pin can be removed from hitch.

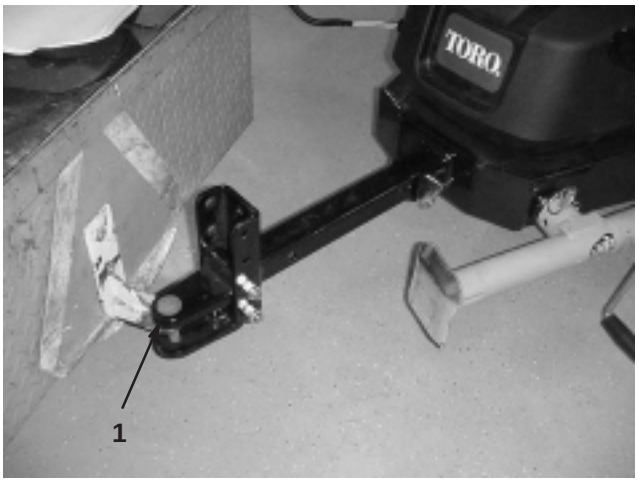

Figure 10

1. Hitch pin

Greasing The Blower

Before the debris blower is operated, it must be greased to ensure proper lubricating characteristics; Refer to greasing the blower in the maintenance section; Page 15. Failure to properly grease the unit will result in premature failure of critical parts.

Before Operating

Caution

If you leave the key in the ignition switch, someone could accidently start the engine and seriously injure you or other bystanders.

Remove the key from the ignition before you do any maintenance.

Checking the Oil Level

1. Park on a level surface and stop the engine.
2. Remove the key and allow the engine to cool.
3. Clean around the oil dipstick (Fig. 11).
4. Pull out the dipstick and wipe the metal end clean (Fig. 11).
5. Slide the dipstick fully into the dipstick tube (Fig. 11).
6. Pull the dipstick out and look at the metal end.
7. If the oil level is low, clean around the oil filler cap and remove the cap (Fig. 11).
8. Slowly pour only enough oil into the valve cover to raise the level to the F (full) mark.

Important Do not overfill the crankcase with oil because the engine may be damaged.

9. Replace the filler cap and dipstick.

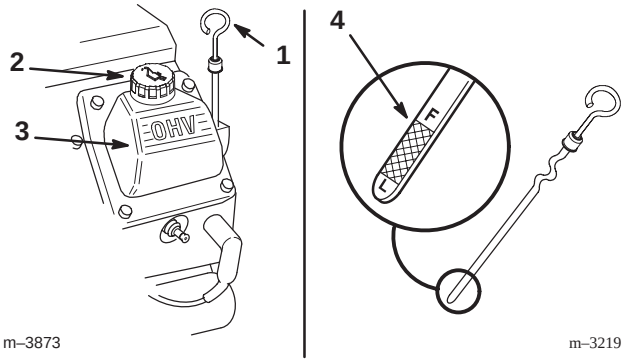

Figure 11

1. Oil dipstick
2. Filler cap
3. Valve cover
4. Metal end

Fill Fuel Tank

Fuel tank capacity is approximately 7 gallons.

Danger

Because gasoline is flammable, caution must be used when storing or handling it. Do not fill fuel tank while engine is running, hot or when machine is in an enclosed area. Vapors may build up and be ignited by a spark or flame source many feet away. DO NOT SMOKE while filling the fuel tank to prevent the possibility of an explosion. Always fill fuel tank outside and wipe up any spilled gasoline before starting engine. Use a funnel or spout to prevent spilling gasoline, and fill tank no higher than one inch below top of tank, (bottom of filler neck). DO NOT OVER FILL. Store gasoline in a clean safety approved container and keep the cap on the container. Keep gasoline in a cool, well–ventilated place; never in an enclosed area such as a hot storage shed. To assure volatility, do not buy more than a 30 day supply of gasoline. Gasoline is a fuel for internal combustion engines; therefore do not use it for any other purpose. Since many children like the smell of gas, keep it out of their reach because the fumes are explosive and dangerous to inhale.

The Toro Company strongly recommends the use of fresh, clean, unleaded regular grade gasoline in Toro gasoline powered products. Unleaded gasoline burns cleaner, extends engine life, and promotes good starting by reducing the build–up of combustion chamber deposits. Leaded gasoline can be used if unleaded is not available.

Note: Never use methanol, gasoline containing methanol, gasoline containing more than 10% ethanol, gasoline additives, premium gasoline or white gas because engine fuel system damage could result.

1. Clean area around fuel tank cap.
2. Remove fuel tank cap.
3. Fill tank to about one inch below top of tank, (bottom of filler neck). **Do not overfill.** Then install cap.
4. Wipe up any fuel that may have spilled to prevent a fire hazard.

Check Tire Pressure

Check tire pressure daily to assure proper level.

1. Correct tire pressure is 28 psi.

Operation

Note: Determine the left and right sides of the machine from the normal operating position.

Controls

Key Switch

The key switch (Fig. 12), used to start and stop the engine, has three positions: off, run, and start.

To start the engine, rotate the key to the start position. Release the key when engine starts and it will move automatically to the run position.

To stop the engine, rotate the key to the off position.



Figure 12

1. Key switch
2. Choke lever

Choke Lever

Before starting a cold engine, move the choke lever (Fig. 12) fully forward. After the engine starts, regulate the choke to keep the engine running smoothly. As soon as possible, move the choke lever rearward as far as possible. A warm engine requires little or no choking.

Throttle Switch

Move the throttle switch (Fig. 13) forward for fast engine speed and rearward for slow speed.

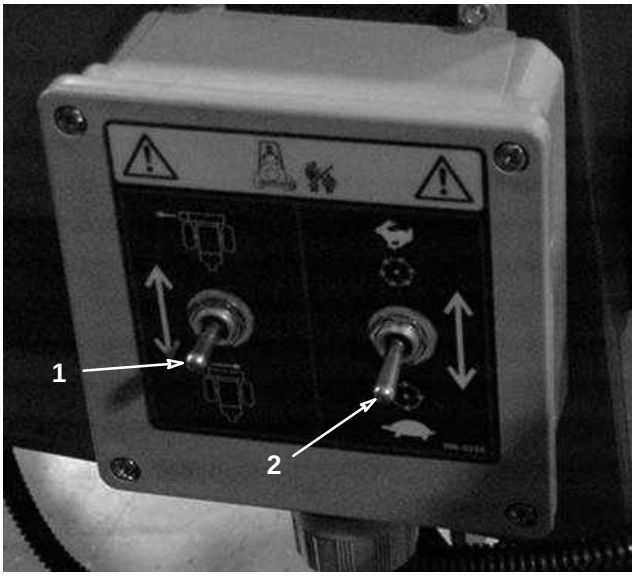

Figure 13

1. Chute Direction switch
2. Throttle switch

Chute Direction Switch

Move chute direction switch (Fig. 13) forward to move chute to the left. Move switch rearward to move chute to the right.

Lift Lever

Hold lift lever. Pull out pin on lever latch and move lift lever (Fig. 14) forward to raise blower for transport. Move lever backwards to lower blower for operation.

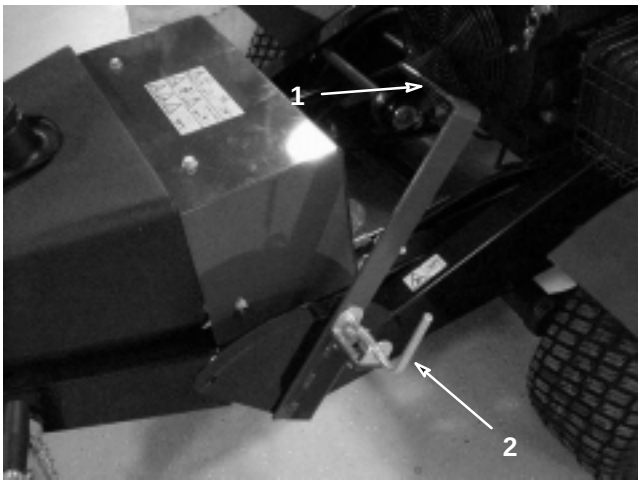

Figure 14

1. Lift lever
2. Lever latch

Starting Instructions

Starting the Engine

1. Remove remote control from storage position on back of battery cover (Fig. 15).
2. Unwind control harness (Fig. 15) from storage hooks and place remote control on tow vehicle.

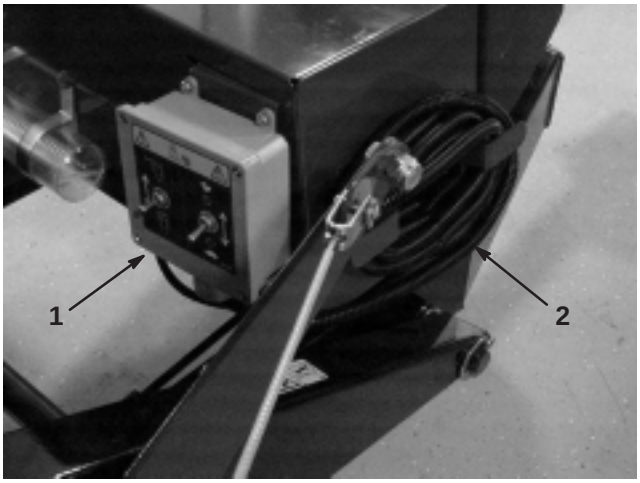

Figure 15

1. Control box
2. Control harness

3. Move the throttle switch to slow (turtle) position.
4. Move the choke lever fully to the right before starting a cold engine.

Note: A warm or hot engine may not require choking.

5. Turn the ignition key to the start position. When the engine starts, release the key.

Important Do not engage the starter for more than 10 seconds at a time. If the engine fails to start, allow a 30 second cool-down period between attempts. Failure to follow these instructions can burn out the starter motor.

6. After the engine starts, gradually move the choke to the left. If the engine stalls or hesitates, move the choke forward again until the engine warms up.
7. Move the throttle switch to desired fast (rabbit) position.

Stopping the Engine

1. Move the throttle switch to the slow (turtle) position.
2. Turn the ignition key off.

Note: If the engine has been working hard or is hot, let it idle for a minute before turning the ignition key off. This helps cool the engine before it is stopped. In an emergency, the engine may be stopped immediately.

Adjusting Discharge Direction

The direction of the discharge opening can be changed from right to left by moving the switch on the remote control.

Operating Tips

Warning

Discharged air has considerable force and could cause injury or loss of footing.

- **Stay away from the discharge opening when the machine is operating.**
- **Keep bystanders away from the discharge opening when the machine is running.**

- Practice blowing material. it is advisable to blow the same direction the wind is blowing to prevent material from blowing back into the cleared area.

Maintenance

Note: Determine the left and right sides of the machine from the normal operating position.

Greasing the Blower

The debris blower must be lubricated after every 8 hours of operation with a no. 2 lithium-based grease. The fittings and locations are as follows:

- Front fan mount pivots (2) (Fig. 16)
- Rear fan mount pivots (2) (Fig. 17)
- Fan bearing (2) (Fig. 18)

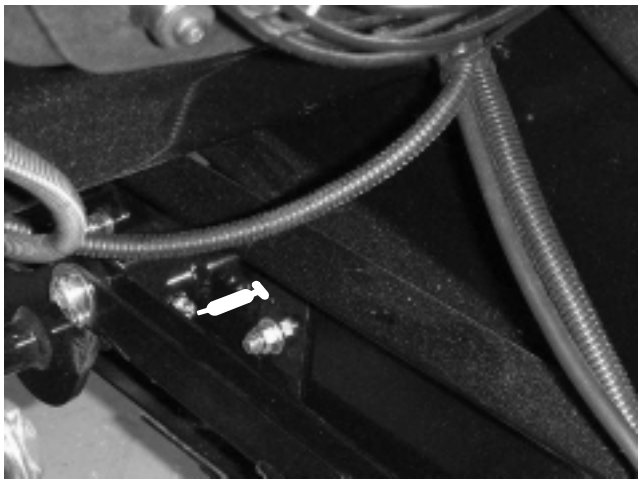

Figure 16

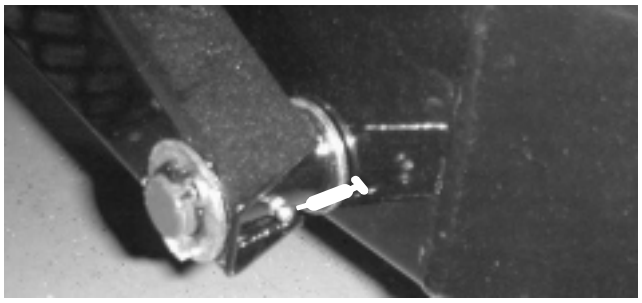

Figure 17

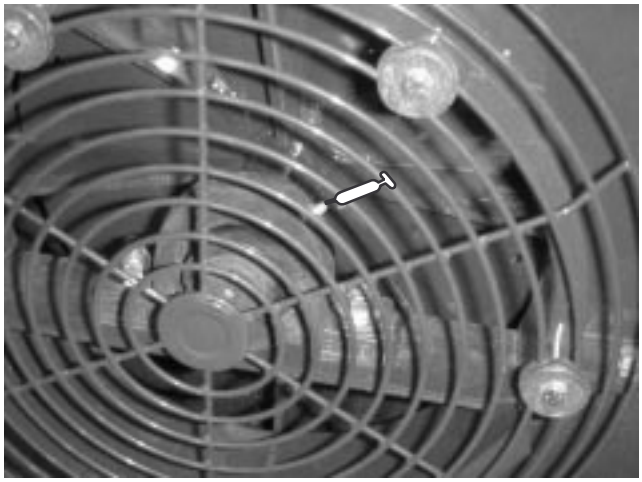

Figure 18

Servicing the Air Cleaner

Foam Element: Clean and oil after every 25 operating hours, or yearly, whichever occurs first.

Note: Remove excess oil or damage to paper element may occur.

Paper Element: Replace after every 100 operating hours or yearly, whichever occurs first.

Note: Service the air cleaner more frequently (every few hours) if operating conditions are extremely dusty or sandy.

Removing the Foam and Paper Elements

1. Stop the engine and remove the key.
2. Clean around the air cleaner to prevent dirt from getting into the engine and causing damage (Fig. 19).

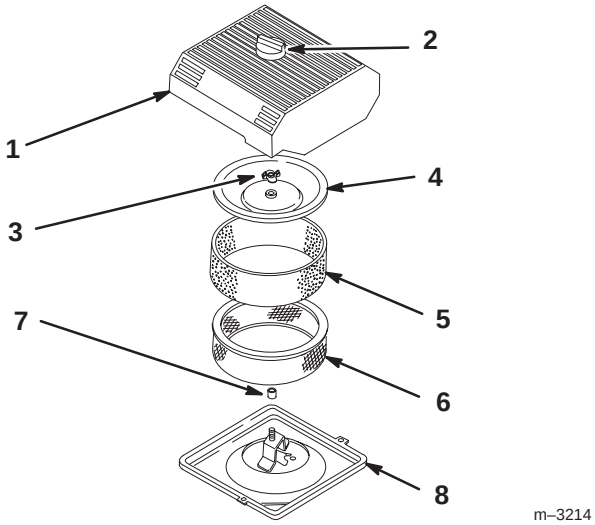

Figure 19

1. Air cleaner cover
2. Knob
3. Cover nut
4. Cover
5. Foam element
6. Paper element
7. Rubber seal
8. Air cleaner base

3. Loosen the knob on the air cleaner cover and remove the cover (Fig. 19).

4. Carefully slide the foam element off the paper element (Fig. 19).

5. Unscrew the cover nut and remove the cover and paper element (Fig. 19).

Cleaning the Foam Element

1. Wash the foam element in liquid soap and warm water.

2. When the element is clean, rinse it thoroughly.

3. Dry the element by squeezing it in a clean cloth.

4. Put one or two ounces of oil on the element (Fig. 20).

Important Replace the foam element if it is torn or worn.

5. Squeeze the element to distribute the oil.

Note: Do not over oil. Remove excess oil or damage to paper element may occur.

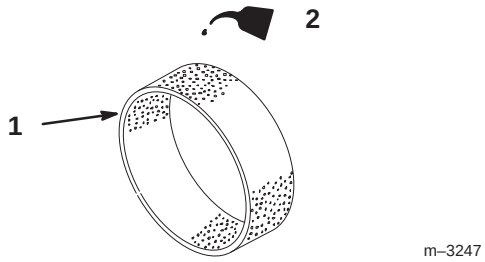

Figure 20

1. Foam element
2. Oil

Checking the Paper Element

Inspect the element for tears, an oily film, damage to the rubber seal, excessive dirt, or other damage (Fig. 21). If any of these conditions exit, replace the filter.

Important Do not clean the paper element with pressurized air or liquids, such as solvent, gas, or kerosene.

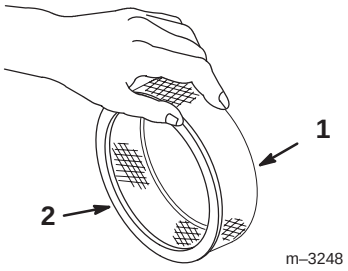

Figure 21

1. Paper element
2. Rubber seal

Important To prevent engine damage, always operate the engine with the complete foam and paper air cleaner assembly installed.

Installing the Foam and Paper Elements

1. Carefully slide the foam element onto the paper air cleaner element (Fig. 19).

2. Slide the air cleaner assembly and cover onto the long rod.

3. Install the cover nut finger-tight against the cover (Fig. 19).

Note: Ensure that the rubber seal is flat against the air cleaner base and cover.

4. Install the air cleaner cover and knob (Fig. 19).

Servicing the Engine Oil

Change oil after the first 50 operating hours and then every 100 operating hours thereafter.

Note: Change oil more frequently when operating conditions are extremely dusty or sandy.

Oil Type: Detergent oil (API service SG, SH, SJ, or higher)

Crankcase Capacity: w/filter, 2.1 qt. (2 l)

Viscosity: See table below

USE THESE SAE VISCOSITY OILS

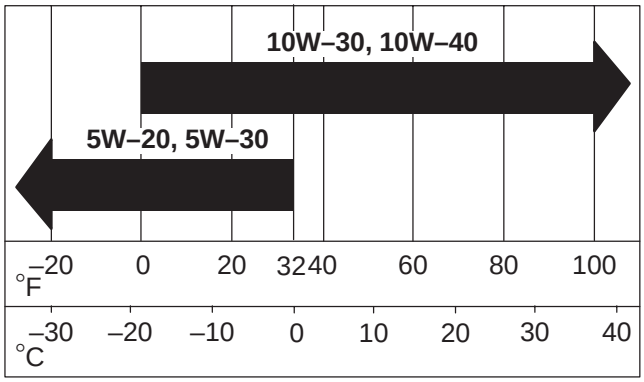

Changing the Oil

1. Start the engine and let it run for five minutes. This warms the oil so it drains better.
2. Chock the wheels, stop the engine, and remove the key.

Caution

Components will be hot if the traction unit has been running. If you touch hot components you may be burned.

Allow the debris blower to cool before performing maintenance or touching components.

3. Place a pan under the drain hose and remove plug (Fig. 22).
4. When the oil has drained completely, install the plug on hose.

Note: Dispose of the used oil at a certified recycling center.

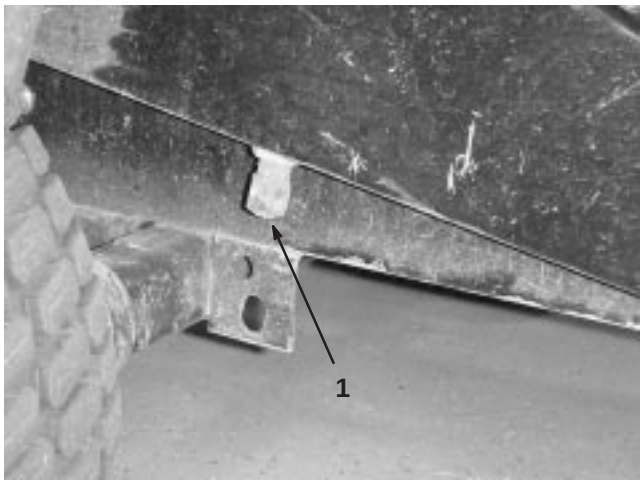

Figure 22

1. Oil drain hose plug

5. Remove the oil fill cap and slowly pour approximately 80% of the specified amount of oil in through the valve cover.
6. Check the oil level; refer to Checking the Oil Level, page 12.
7. Slowly add additional oil to bring the level to the F (full) mark on the dipstick.
8. Replace the fill cap.

Changing the Oil Filter

Replace the oil filter every 200 hours or every other oil change.

Note: Change the oil filter more frequently when operating conditions are extremely hot, dusty, or sandy.

1. Drain the oil from the engine; refer to Changing the Oil, page 17.
2. Remove the old filter and wipe the filter adapter (Fig. 23) gasket surface.
3. Pour new oil of the proper type in through the center hole of the filter. Stop pouring when the oil reaches the bottom of the threads.
4. Allow a minute or two for the oil to be absorbed by filter material, then pour off the excess oil.
5. Apply a thin coat of new oil to the rubber gasket on the replacement filter (Fig. 23).

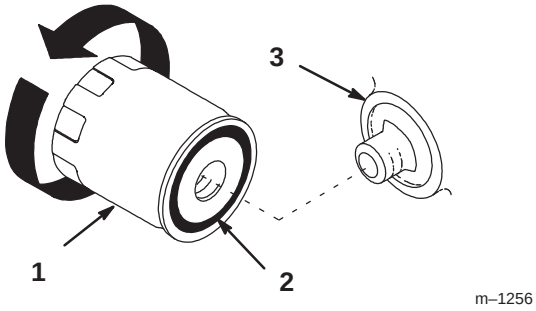

Figure 23

1. Oil filter
2. Gasket
3. Adapter

6. Install the replacement oil filter to the filter adapter. Turn the oil filter clockwise until the rubber gasket contacts the filter adapter, then tighten the filter an additional 1/2 turn (Fig. 23).

7. Fill the crankcase with the proper type of new oil; refer to Changing the Oil, page 17.

Adjusting The Blower Belt

Make sure belt is properly tensioned to ensure proper operation of the machine and unnecessary wear. Check belt frequently.

Note: Check/Adjust The Blower Belt Tension After The First 20 Hours Of Operation.

1. Remove the capscrews, washers and nuts securing the belt guard to the blower housing (Fig. 24). Remove the guard.

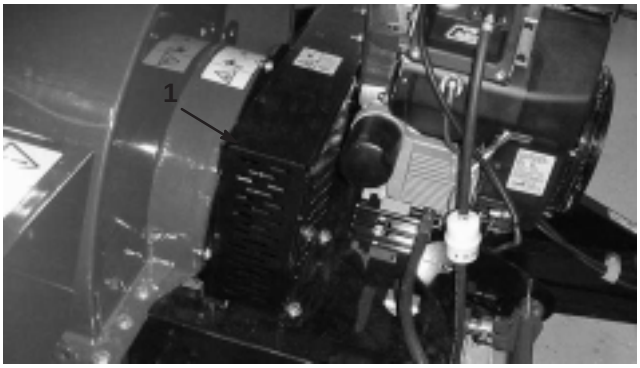

Figure 24

1. Belt guard

2. Remove capscrew and nut securing tensioner guide to blower frame (Fig. 25). Belt tension will be released when capscrew is removed.

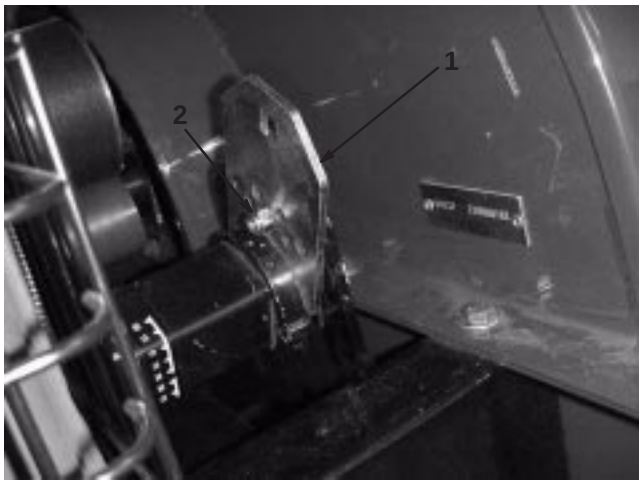

Figure 25

1. Tensioner guide
2. Capscrew and nut

3. On back side of blower frame, loosen capscrew securing belt tensioner to frame (Fig. 26).

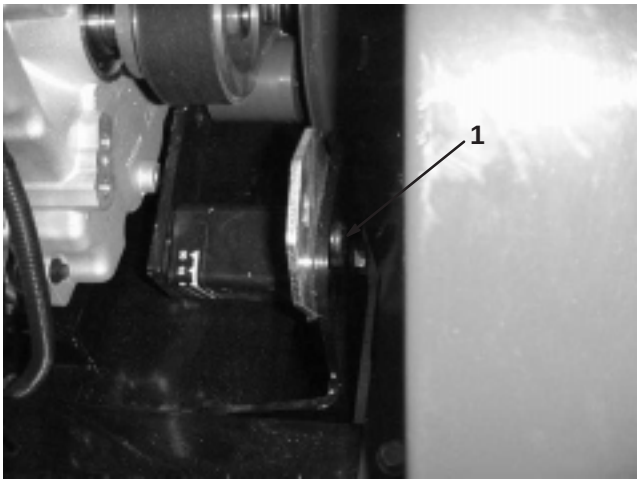

Figure 26

1. Loosen this capscrew

4. Position a large ratchet in tensioner hole. Rotate tensioner clockwise until decal is aligned with 15° on tensioner tube.

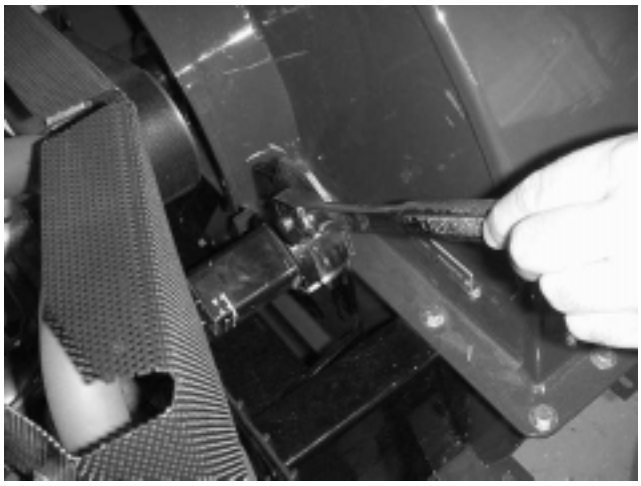

Figure 27

5. Insert capscrew into aligned guide holes and secure with nut. If holes are not exactly aligned, rotate guide to the next higher hole until aligned.
6. Tighten capscrew, on back side of frame, to lock tensioner.
7. Install the belt guard to the blower housing with the capscrews, washers, and nuts.

Servicing the Battery

Warning

Battery posts, terminals, and related accessories contain lead and lead compounds, chemicals known to the State of California to cause cancer and reproductive harm. ***Wash hands after handling.***

Check the electrolyte level in the battery every 100 hours. Always keep the battery clean and fully charged. Use a paper towel to clean the battery case. If the battery terminals are corroded, clean them with a solution of four parts water and one part baking soda. Apply a light coating of grease to the battery terminals to reduce corrosion.

Checking the Electrolyte Level

1. Open covers to see into the cells. The electrolyte must be up to the lower part of the tube (Fig. 28).

Important Do not allow the electrolyte to get below the plates. (Fig. 28).

2. If the electrolyte is low, add the required amount of distilled water; refer to Adding Water to the Battery, below.

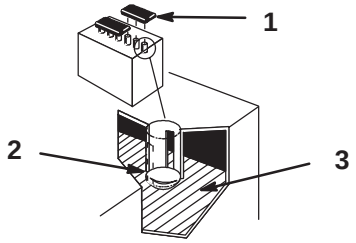

Figure 28

1. Filler caps
2. Lower part of tube
3. Plates

Adding Water to the Battery

The best time to add distilled water to the battery is just before you operate the traction unit. This lets the water mix thoroughly with the electrolyte solution.

1. Clean the top of the battery with a paper towel.
2. Lift off the filler caps (Fig. 28).
3. Slowly pour distilled water into each battery cell until the level is up to the lower part of the tube (Fig. 28).

Important Do not overfill the battery because electrolyte (sulfuric acid) can cause severe corrosion and damage to the chassis.

4. Press the filler caps onto the battery.

Charging the Battery

Warning

Charging the battery produces gasses that can explode.

Never smoke near the battery and keep sparks and flames away from battery.

Important Always keep the battery fully charged (1.260 specific gravity). This is especially important to prevent battery damage when the temperature is below 32°F (0°C).

1. Check the electrolyte level; refer to Checking Electrolyte Level, page 19.
2. Remove the filler caps from the battery and connect a 3 to 4 amp battery charger to the battery posts. Charge the battery at a rate of 4 amperes or less for 4 hours (12 volts). Do not overcharge the battery.
3. Install the filler caps after the battery is fully charged.

Servicing the Spark Plugs

Check the spark plugs after every 200 operating hours. Ensure that the air gap between the center and side electrodes is correct before installing each spark plug. Use a spark plug wrench for removing and installing the spark plugs and a gapping tool/feeler gauge to check and adjust the air gap. Install new spark plugs if necessary.

Type: Champion Premium Gold 2071 or Champion RC12YC (or equivalent) Air Gap: 0.030 in. (0.76 mm)

Removing the Spark Plugs

1. Stop the engine and remove the key.
2. Pull the wires off of the spark plugs (Fig. 29).
3. Clean around the spark plugs.
4. Remove the spark plugs and metal washers.

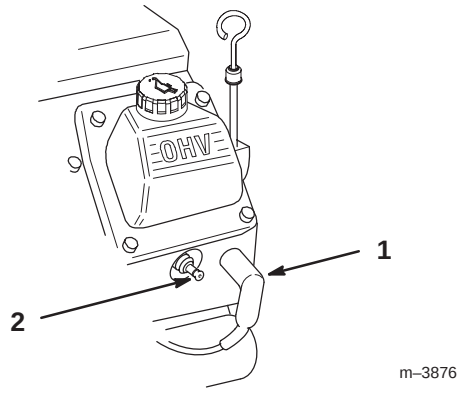

Figure 29

1. Spark plug wire
2. Spark plug

Checking the Spark Plugs

1. Look at the center of the spark plugs (Fig. 30). If you see light brown or gray on the insulator, the engine is operating properly. A black coating on the insulator usually means the air cleaner is dirty.

Important Never clean the spark plugs. Always replace the spark plugs when they have a black coating, worn electrodes, an oily film, or cracks.

2. Check the gap between the center and side electrodes (Fig. 30).
3. Bend the side electrode (Fig. 30) if the gap is not correct.

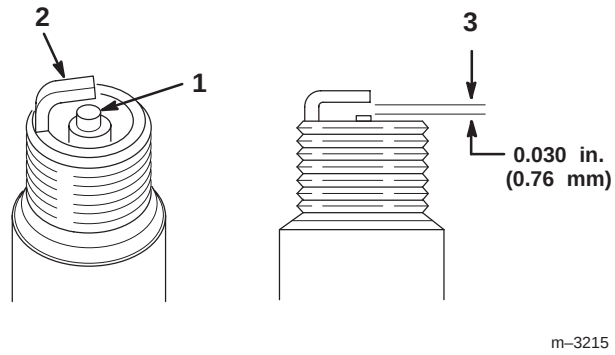

Figure 30

1. Center electrode insulator
2. Side electrode
3. Air gap (not to scale)

Installing the Spark Plugs

1. Thread the spark plugs into the spark plug holes.
2. Tighten the spark plugs to 20 ft-lb (27 N.m).
3. Push the wires onto the spark plugs (Fig. 29).

Replacing the Fuel Filter

Replace the fuel filter yearly. Never install a dirty filter.

1. Stop the engine and remove the key.
2. Shut off the fuel valve under fuel tank.
3. Clamp the fuel line between the fuel tanks and the fuel filter to block the fuel flow.
4. Squeeze the ends of the hose clamps together and slide them away from the filter (Fig. 31).



Figure 31

1. Filter

5. Place a drain pan under the fuel lines to catch any leaks, then remove the filter from the fuel lines.
6. Install a new filter and move the hose clamps close to the filter.
7. Remove the clamp blocking fuel flow and open the fuel valves.

Draining the Fuel Tank

Danger

In certain conditions, gasoline is extremely flammable and highly explosive. A fire or explosion from gasoline can burn you and others and can damage property.

- **Drain gasoline from the fuel tank when the engine is cold. Do this outdoors in an open area. Wipe up any gasoline that spills.**
- **Never smoke when draining gasoline, and stay away from an open flame or where a spark may ignite the gasoline fumes.**

1. Park the traction unit on a level surface, to ensure that the fuel tanks drain completely.
2. Stop the engine, and remove the key.
3. Shut off fuel valve under fuel tank.
4. Loosen the hose clamp at the fuel filter and slide it up the fuel line away from the filter.
5. Pull the fuel line off of the fuel filter, open the fuel valve, and allow the gasoline to drain into a gas can or drain pan.

Note: Now is the best time to install a new fuel filter because the fuel tank is empty.

6. Install the fuel line onto the fuel filter.
7. Slide the hose clamp close to the fuel filter to secure the fuel line.
8. Open the fuel valve.

Troubleshooting

PROBLEM	POSSIBLE CAUSES	CORRECTIVE ACTION
Starter does not crank	1. Battery is dead. 2. Electrical connections are corroded or loose. 3. Relay or switch is defective.	1. Charge the battery. 2. Check electrical connections for good contact. 3. Contact Authorized Service Dealer.
Engine will not start, starts hard, or fails to keep running.	1. Fuel tanks is empty. 2. Choke is not on. 3. Air cleaner is dirty. 4. Spark plug wires are loose or disconnected. 5. Spark plugs are pitted, fouled, or gap is incorrect. 6. Dirt in fuel filter. 7. Dirt, water, or stale fuel is in fuel system.	1. Fill fuel tank with gasoline. 2. Move choke lever fully forward. 3. Clean or replace air cleaner element. 4. Install wires on spark plugs. 5. Install new, correctly gapped spark plugs. 6. Replace fuel filter. 7. Contact Authorized Service Dealer.
Engine loses power	1. Air cleaner is dirty. 2. Oil level in crankcase is low. 3. Cooling fins and air passages under engine blower housing are plugged. 4. Spark plugs are pitted, fouled, or gap is incorrect. 5. Dirt in fuel filter. 6. Dirt, water, or stale fuel is in fuel system.	1. Clean air cleaner element. 2. Add oil to crankcase. 3. Remove obstruction from cooling fins and air passages. 4. Install new, correctly gapped spark plugs. 5. Replace fuel filter. 6. Contact Authorized Service Dealer.
Engine overheats.	1. Oil level in crankcase is low. 2. Cooling fins and air passages under engine blower housing are plugged.	1. Add oil to crankcase. 2. Remove obstruction from cooling fins and air passages.
There is excessive vibration.	1. The bearings on the fan shaft are damaged. 2. Material is built up on the fan blades. 3. Engine mounting bolts are loose. 4. Drive belt too tight.	1. Replace the bearings. 2. Clean out any build up on the inside of the housing. 3. Tighten engine mounting bolts. 4. Loosen drive belt one notch.
There is lack of adequate air flow.	1. The air slots are clogged with debris. 2. The throttle on the engine is set too slow.	1. Clean out any debris from the slots. 2. Make any necessary repairs to bring the engine speed up to normal.

Cleaning and Storage

1. Stop the engine and remove the key.
2. Remove dirt and grime from the external parts of the entire machine, especially the engine. Clean dirt and chaff from the outside of the engine's cylinder head fins and blower housing.
3. Service the air cleaner; refer to Servicing the Air Cleaner.
4. Grease the blower; refer to Greasing the Blower.
5. Change the crankcase oil; refer to Servicing the Engine Oil.
6. Remove the spark plugs and check the condition of each; refer to Servicing the Spark Plugs.
7. With the spark plugs removed from the engine, pour two tablespoons of engine oil into each spark plug hole.
8. Place rags over the spark plug holes to catch any oil spray, then use the starter to crank the engine and distribute the oil inside the cylinder.
9. Install the spark plugs, but do not install the wires on the spark plugs.
10. Check the tire pressure; refer to Tire Pressure
11. Charge the battery; refer to Servicing the Battery.
12. Check and tighten all bolts, nuts, and screws. Repair or replace any part that is damaged or defective.
13. Paint all scratched or bare metal surfaces. Paint is available from your Authorized Service Dealer.
14. Store the blower unit in a clean, dry garage or storage area. Remove the key from the ignition switch and keep it in a memorable place.
15. Cover the blower to protect it and keep it clean.

The Toro General Commercial Products Warranty

A Two-Year Limited Warranty

Conditions and Products Covered

The Toro Company and its affiliate, Toro Warranty Company, pursuant to an agreement between them, jointly warrant your Toro Commercial Product ("Product") to be free from defects in materials or workmanship for two years or 1500 operational hours*, whichever occurs first. Where a warrantable condition exists, we will repair the Product at no cost to you including diagnosis, labor, parts, and transportation. This warranty begins on the date the Product is delivered to the original retail purchaser.

* Product equipped with hour meter

Instructions for Obtaining Warranty Service

You are responsible for notifying the Commercial Products Distributor or Authorized Commercial Products Dealer from whom you purchased the Product as soon as you believe a warrantable condition exists.

If you need help locating a Commercial Products Distributor or Authorized Dealer, or if you have questions regarding your warranty rights or responsibilities, you may contact us at:

Toro Commercial Products Service Department
Toro Warranty Company
8111 Lyndale Avenue South
Bloomington, MN 55420-1196
952-888-8801 or 800-982-2740
E-mail: commercial.service@toro.com

Owner Responsibilities

As the Product owner, you are responsible for required maintenance and adjustments stated in your operator's manual. Failure to perform required maintenance and adjustments can be grounds for disallowing a warranty claim.

Items and Conditions Not Covered

Not all product failures or malfunctions that occur during the warranty period are defects in materials or workmanship. This express warranty does not cover the following:

- Product failures which result from the use of non-Toro replacement parts, or from installation and use of add-on, modified, or unapproved accessories
- Product failures which result from failure to perform required maintenance and/or adjustments
- Product failures which result from operating the Product in an abusive, negligent or reckless manner
- Parts subject to consumption through use unless found to be defective. Examples of parts which are consumed, or used up, during normal Product operation include, but are not limited to, blades, reels, bedknives, tines, spark plugs, castor wheels, tires, filters, belts, etc.
- Failures caused by outside influence. Items considered to be outside influence include, but are not limited to, weather, storage practices, contamination, use of unapproved coolants, lubricants, additives, or chemicals, etc.
- Normal "wear and tear" items. Normal "wear and tear" includes, but is not limited to, damage to seats due to wear or abrasion, worn painted surfaces, scratched decals or windows, etc.

Parts

Parts scheduled for replacement as required maintenance are warranted for the period of time up to the scheduled replacement time for that part.

Parts replaced under this warranty become the property of Toro. Toro will make the final decision whether to repair any existing part or assembly or replace it. Toro may use factory remanufactured parts rather than new parts for some warranty repairs.

General Conditions

Repair by an Authorized Toro Distributor or Dealer is your sole remedy under this warranty.

Neither The Toro Company nor Toro Warranty Company is liable for indirect, incidental or consequential damages in connection with the use of the Toro Products covered by this warranty, including any cost or expense of providing substitute equipment or service during reasonable periods of malfunction or non-use pending completion of repairs under this warranty. Except for the Emissions warranty referenced below, if applicable, there is no other express warranty. All implied warranties of merchantability and fitness for use are limited to the duration of this express warranty.

Some states do not allow exclusions of incidental or consequential damages, or limitations on how long an implied warranty lasts, so the above exclusions and limitations may not apply to you.

This warranty gives you specific legal rights, and you may also have other rights which vary from state to state.

Note regarding engine warranty: The Emissions Control System on your Product may be covered by a separate warranty meeting requirements established by the U.S. Environmental Protection Agency (EPA) and/or the California Air Resources Board (CARB). The hour limitations set forth above do not apply to the Emissions Control System Warranty. Refer to the Engine Emission Control Warranty Statement printed in your operator's manual or contained in the engine manufacturer's documentation for details.

Countries Other than the United States or Canada

Customers who have purchased Toro products exported from the United States or Canada should contact their Toro Distributor (Dealer) to obtain guarantee policies for your country, province, or state. If for any reason you are dissatisfied with your Distributor's service or have difficulty obtaining guarantee information, contact the Toro importer. If all other remedies fail, you may contact us at Toro Warranty Company.

Part No. 374-0031 Rev. a