3477-918A

Z Master® Riding Mower

For Z Master 2000 and 4000 Series Machines

Setup Instructions

Removing the Machine from the Crate

If you are removing the machine from a metal crate, refer to the Dealer/Distributor Portal for further information.

Adding Fuel to the Machine

Add fuel to the machine before starting it. Refer to your *Operator's Manual* for the correct fuel and procedure.

Checking the Engine-Oil Level

Before you start the engine and use the machine, check the oil level in the engine crankcase; refer to Checking the Engine-Oil Level in the *Operator's Manual*.

Checking the Tire Pressure

Check the tire pressure before starting the machine. Refer to your *Operator's Manual* for the correct tire type and procedure.

Servicing the Battery

IMPORTANT

Do not run the machine with the battery disconnected; electrical damage may occur to the engine.

© 2025—The Toro® Company
8111 Lyndale Ave So
Bloomington, MN 55044

Register at
www.Toro.com

Original Instructions (EN)
Printed in the USA
All rights reserved

3477-918 A

1. Charge the battery. Refer to the *Operator's Manual* for instructions.
2. Connect the negative battery cable.

   Note: If the positive cable is also disconnected, connect the positive (red) cable to the positive battery terminal first, then connect the negative (black) cable to the negative battery terminal. Slip the insulator boot over the positive terminal.

   Note: For MyRide® machines, ensure that the ground cable 3 does not rub against the trailing arm 2 or lower shock mount 1.

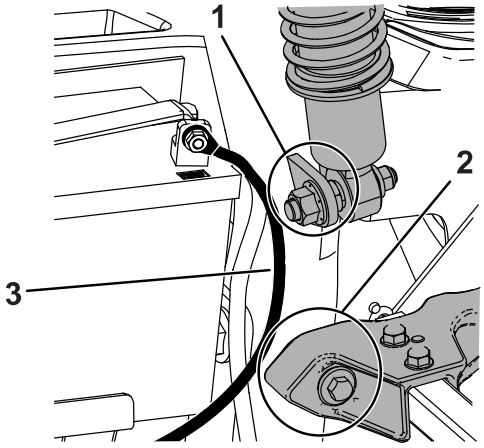

G552212

Installing the Upper ROPS Hoop

Models 74022 and 74024 Only

Parts Required

1	Rollover Protection System (ROPS) Kit

Install the Rollover Protection System (ROPS) Kit. Follow the *Installation Instructions*.

Raising the Roll Bar

IMPORTANT

Always use the seat belt with the roll bar in the raised position.

1. Remove the hairpin cotters and remove the 2 pins.
2. Raise the roll bar to the upright position.
3. Install the 2 pins, and secure them with the hairpin cotters.

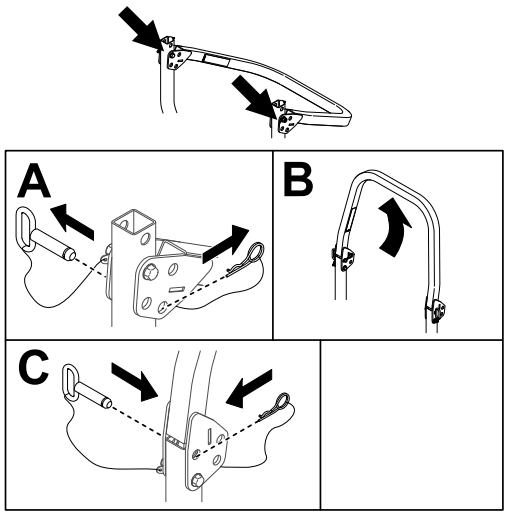

G399201s

Checking the Grass Deflector

If there are plastic ties holding the grass deflector up, remove them and lower the deflector into place.

⚠ WARNING ⚠

An uncovered discharge opening could allow the machine to throw objects toward you or bystanders, resulting in serious injury or death. Also, contact with the blade could occur.

Never operate the machine without a cover plate, a mulch plate, grass deflector, or bagger installed.

1. Ensure that one end of the spring (2) is installed behind the deck edge (4) before installing the bolt.
2. Place the other end of the spring (3) around the grass deflector (1).

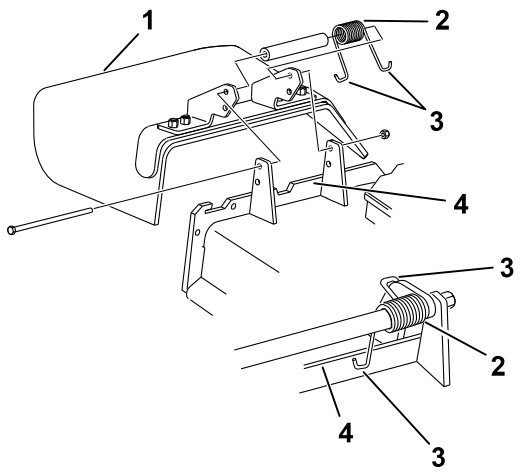

G021181s

IMPORTANT

The grass deflector must be free to rotate with downward tension. Lift the deflector up to the full open position and ensure that it rotates freely, without binding into the full down position.

Removing the Shipping Cable Ties

Machines with MyRide Suspension System Only

⚠ CAUTION ⚠

The springs are compressed by the shipping cable ties. When you remove the cable ties, the seat and springs will raise up quickly by approximately 9 cm (3-1/2 inches), and could injure you.

Ensure that your hands, arms, and face are clear of the seat and springs before cutting the cable ties.

Remove the cable ties before operating the machine.

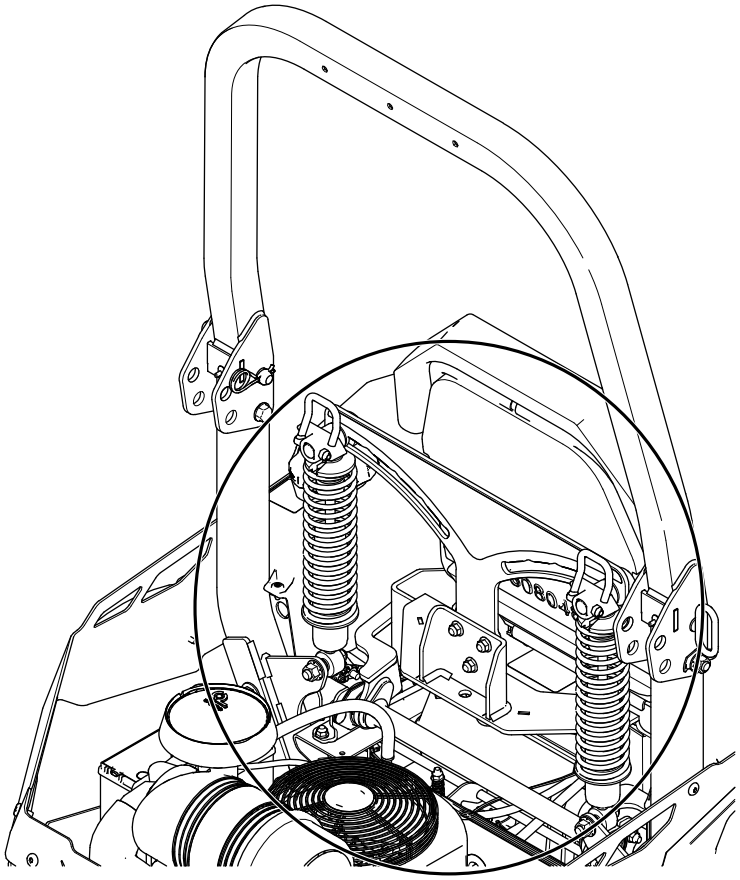

G412478s

Checking the Machine for Grease

Parts Required

1 tube	No. 2 lithium or molybdenum grease (purchase separately)

Before you use the machine, check the machine for grease; refer to the Lubrication section in the *Operator's Manual*.

Checking the Mower Adjustment

Adjust the side-to-side level and the front-to-rear blade slope. Use the relevant procedures in the *Operator's Manual* to verify that the deck is level, and make any adjustments as needed.

Checking the Machine Before Delivery to the Customer

Before delivering the machine to the customer, ensure that you have performed the procedures listed in the following table and initial each when finished. Refer to the *Operator's Manual* for instructions on performing these procedures.

Parts Required

Initial	Check Procedure
	Check the drive tire pressure.
	Check the caster tire pressure if applicable.
	Check the level of the mower deck.
	Check the engine-oil level.
	Check the hydraulic-fluid level.
	Check that the ROPS is secure.
	Check the adjustment of the parking brake; refer to the *Operator's Manual* for the adjustment procedure.
	Ensure that the machine tracks correctly; refer to the *Operator's Manual* for the adjustment procedure.
	Check the safety-interlock systems and ensure that they are all functioning properly; refer to the *Operator's Manual*.
	Ensure that the PTO is functioning correctly.
	Check all fasteners that you installed to ensure that they are tight.

When you finish setting up the machine, sign and date in the space provided below:

Signature: _____ Serial No. _____

Delivering the Machine to the Customer

Parts Required

1	*Operator's Manual*
1	Engine owner's manual (non-Toro engines)
1	Operator training material
2	Key
1	Registration card

At delivery, fill in the model and serial number, complete the items listed in the following table, and initial each when finished.

Model No. _____ Serial No. _____

Dealer Initial	Customer Initial	Check Procedure
		Show the customer where the following features are located and how they function:
		• Fuel tank
		• Oil-fill cap/Oil dipstick
		• Spark plug(s)
		• Engine-oil filter
		• Engine-oil drain
		• Fuel gauge, valve, and hose
		• Air filter
		• Hydraulic filter
		• Battery
		• Ignition switch
		• Throttle lever
		• Choke (if applicable)
		• Power-takeoff switch (PTO)
		• Motion-control levers
		• Parking brake
		• Height of cut
		• Lift-assist lever (if applicable)
		• Adjustable seat

Dealer Initial	Customer Initial	Check Procedure
		• Hydraulic-bypass valves
		• Rollover protection system (ROPS)

Dealer Initial	Customer Initial	Check Procedure
		Refer to the *Operator's Manual* to point out safety procedures, operation, and maintenance procedures.
		Review the warranty statement as shown in the *Operator's Manual*.
		Describe the post-sale service procedures for your store.
		Assist the customer in filling out and mailing the registration card or register online at www.Toro.com.
		Ensure that the customer receives the *Operator's Manual*, engine owner's manual (non-Toro engines), *Setup Instructions*, and operator training material.
		Ensure that the customer knows that the *Parts Catalog* is available at www.Toro.com.
		Assist the customer in loading the machine.

Note: When you, the dealer representative, have finished delivering the machine to the customer, sign and date in the space provide below and keep a copy of this page for dealer records. Also, the dealer must remind the customer to use a full-width trailer ramp to load the machine.

Signature: _____ Date: _____

Signature: _____ Date: _____


TORO®