Form No. 3477-947 Rev A

TORO®

Count on it.

Parts Catalog

Backup Alarm Kit

Groundsmaster® e3200 serial number 417500000 and up or e3300 Series Traction Unit

Model No. 31817

Register at www.Toro.com.
Original Instructions (EN)

CE

3477-947 A

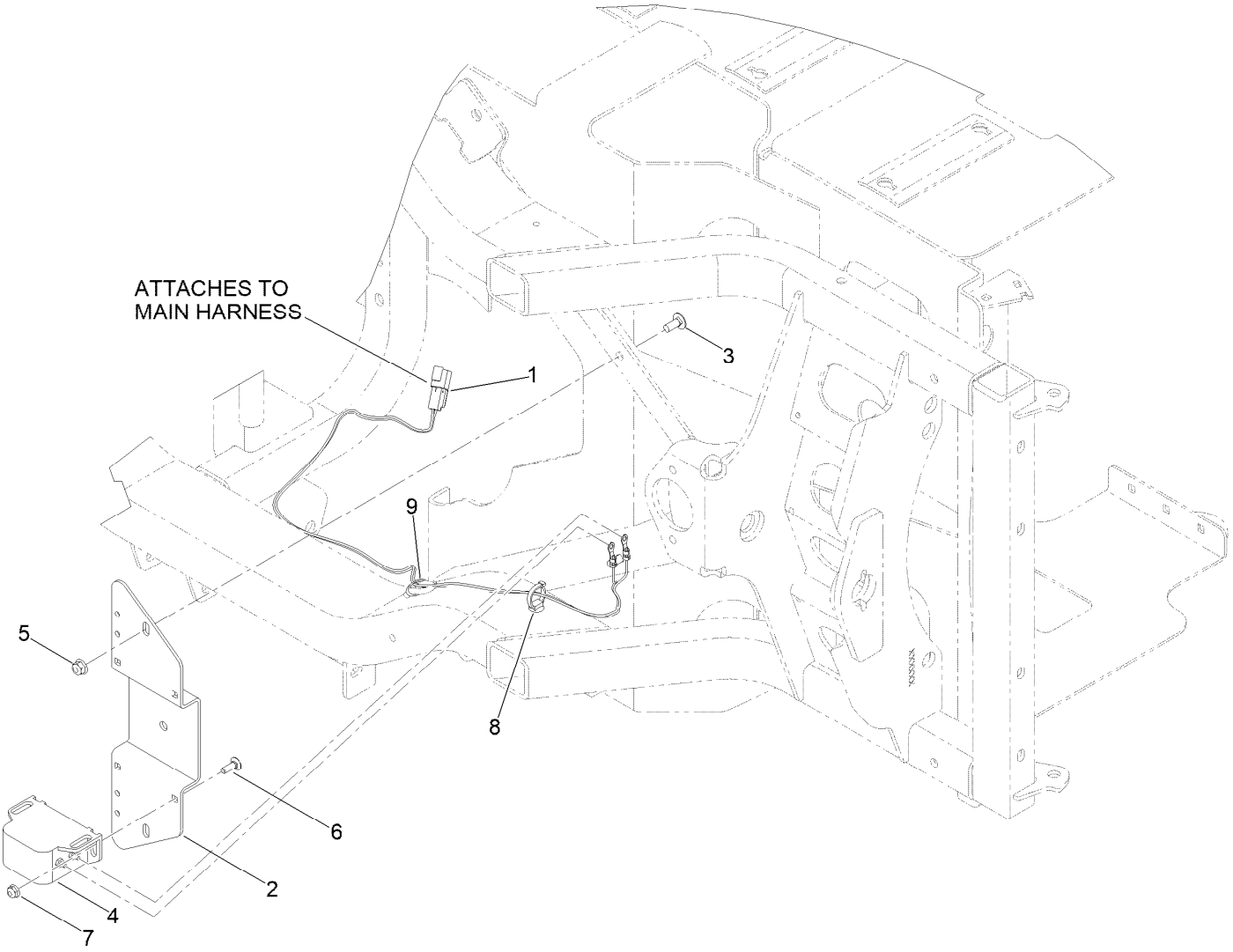

Backup Alarm Kit Assembly

Ref.	*Part Number*	*Qty.*	*Description*
1	122-3143	1	Harness-Wire, Reverse Alarm
2	161-5085-03	1	Bracket-Horn Mount
3	3230-23	2	Bolt-CARR
4	93-3920	1	Alarm-Backup
5	104-8300	2	Nut-HF, NI
6	1-807512	2	Bolt-CARR
7	104-7201	2	Nut-HF, NI
8	32180-030	1	Clip-Tie
9	3290-378	1	Tie-Cable