Form No. 3477-948 Rev A

EU Road Light Kit

Groundsmaster® e3200 or e3300 Series Traction Unit

Model No. 31815

Installation Instructions

Important: **This kit can be installed to Groundsmaster e3200 machines only with a serial number of 417500000 and up.**

Installation

1

Preparing the Machine

No Parts Required

Procedure

1. Park the machine on a level surface.
2. Ensure that the parking brake is engaged; refer to your *Operator's Manual*.
3. Lower the cutting unit (if equipped).
4. Shut off the machine and remove the key.
5. Turn the battery-disconnect switch to the OFF position.

© 2025—The Toro® Company
8111 Lyndale Avenue South
Bloomington, MN 55420

Register at www.Toro.com.

Original Instructions (EN)
Printed in the USA
All Rights Reserved

3477-948

2

Installing the Clips and Speed Nuts

Parts needed for this procedure:

1	Switch mount
6	Clip (1/4 inch)
2	Speed nut
1	Fuse mount plate
2	U-type speed nut

Procedure

1. Install the 6 clips and 2 speed nuts to the switch mount (Figure 1).

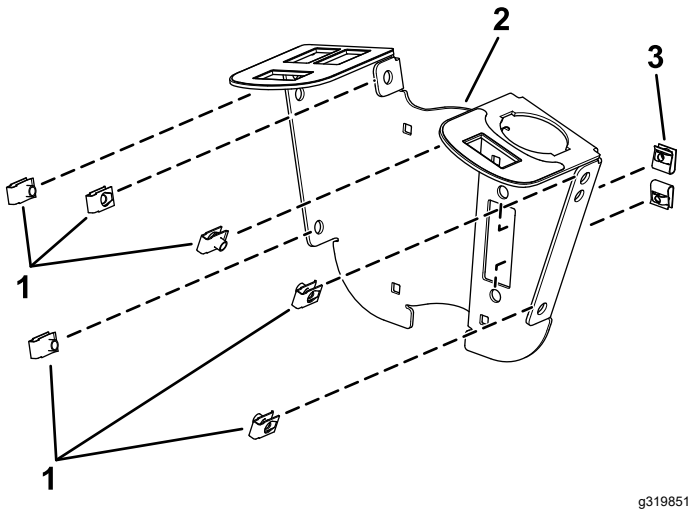

g319851

Figure 1

1. Clip
2. Switch mount
3. Speed nut

2. Install the U-type speed nuts to the fuse-mount plate (Figure 2).

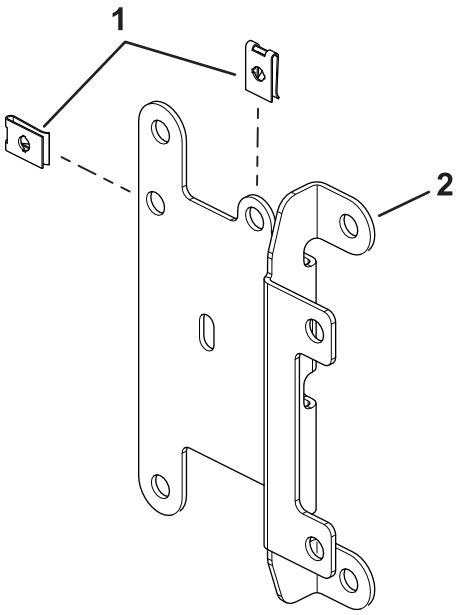

g460351

Figure 2

1. U-type speed nuts
2. Fuse-mount plate

3

Installing the Switch Mount

Parts needed for this procedure:

2	Mount bracket
4	Carriage bolt (1/4 x 2 inches)
2	Locknut (1/4 inch)
2	Hex-head screw (1/4 x 3/4 inch)
2	Flange nut (1/4 inch)
1	Flasher
1	Wire harness
2	Cable tie
1	Fuse cover
2	Thumb screw
2	Push nut
2	Screw (#10 x 3/8 inch)
1	Multi-function switch
3	Hole plug
1	Rocker switch
1	Control cover
6	Hex-head screw (1/4 x 3/4 inch)
2	Switch clip
2	Push rivet

Procedure

1. Loosely install the switch mount around the steering column using 4 carriage bolts (1/4 x 2 inches), 2 mounting brackets, fuse-mount plate, and 4 locknuts (1/4 inch) as shown in Figure 3.

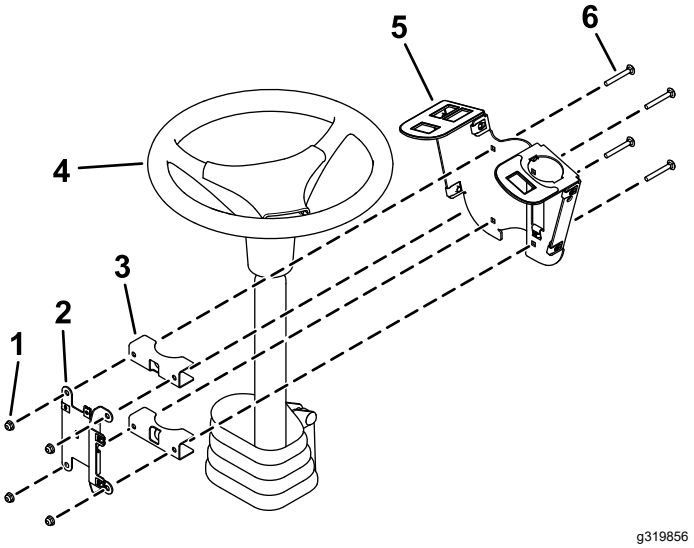

Figure 3

1. Locknuts (1/4 inch)
2. Fuse-mount plate
3. Mounting brackets
4. Steering column
5. Switch mount
6. Carriage bolt (1/4 x 2 inches)

2. Install the multi-function switch to the switch mount and secure it using the switch clips under the hole for the switch (Figure 4).

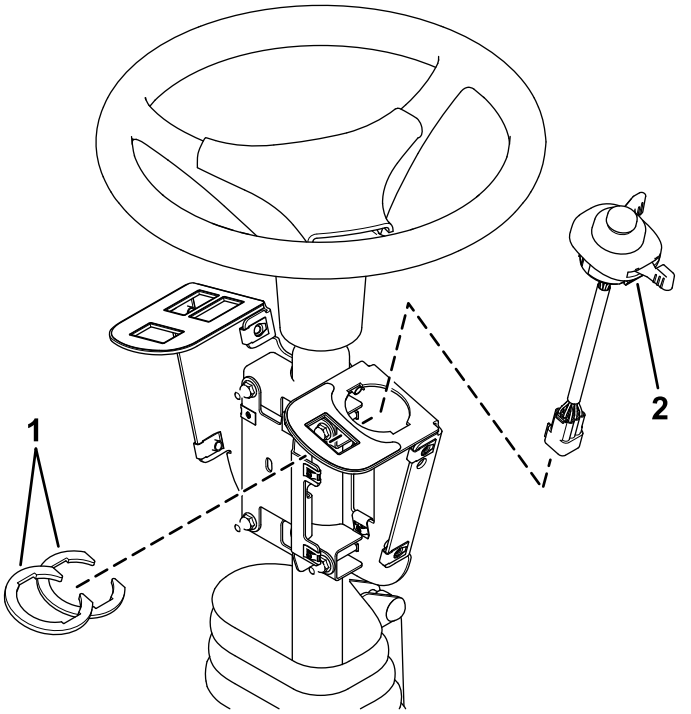

Figure 4

1. Switch clips
2. Multi-function switch

3. Install the rocker switch and hole plugs into the switch mount (Figure 5).

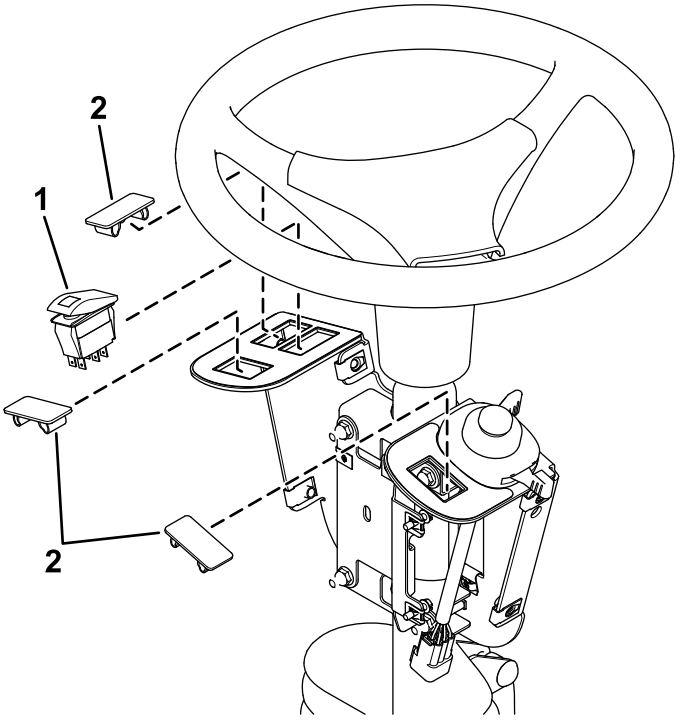

Figure 5

1. Rocker switch
2. Hole plug

4. Install the flasher to the fuse-mount plate using a screw (#10 x 3/8 inch) as shown in Figure 6.

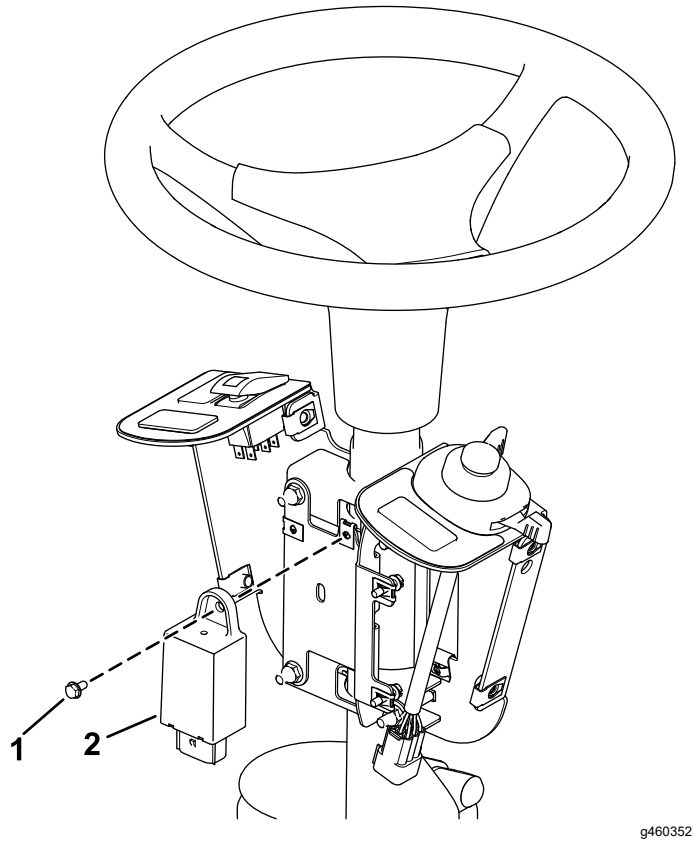

Figure 6

1. Screw (#10 x 3/8 inch)
2. Flasher

5. Secure the flasher using a cable tie (Figure 7).
6. Plug the harness into the rocker switch and multi-function switch (Figure 7).

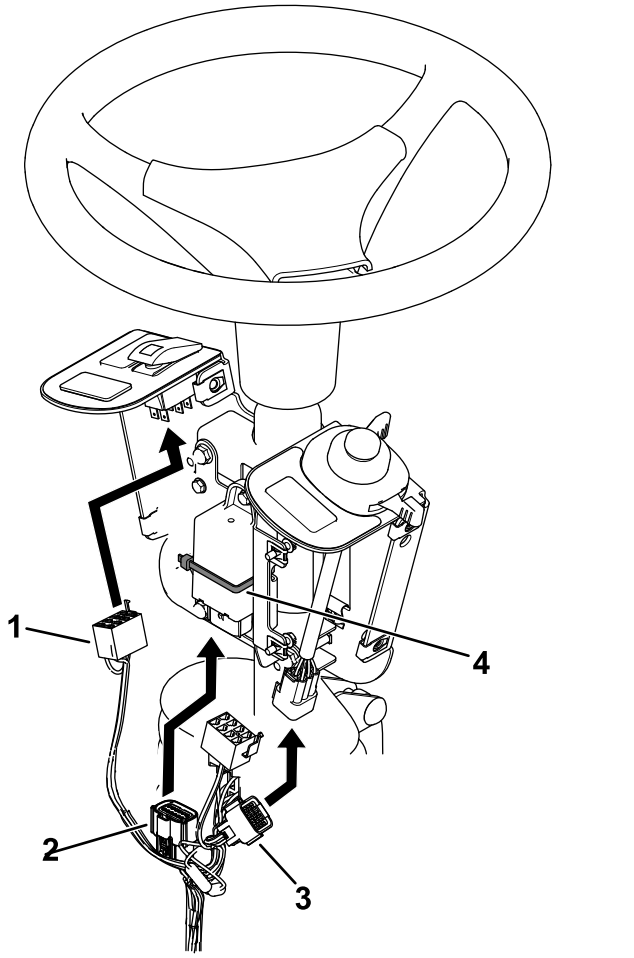

Figure 7

1. Rocker switch connector
2. Flasher connector
3. Switch connector
4. Cable tie

7. Plug the wire harness into the flasher (Figure 7).
8. Loosen the bolts around the steering-column base (Figure 8).
9. Raise the base up and drill a 22 mm (7/8 inch) hole as shown in Figure 8.

⚠ WARNING

Using a drill without proper eye protection may allow debris to enter the eye, causing injury.

When drilling, always wear eye protection.

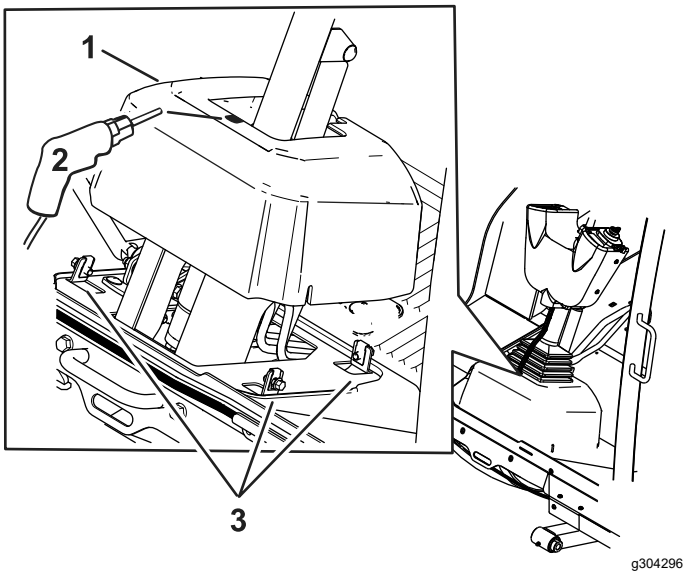

Figure 8

1. Steering-column base
2. 22 mm (7/8 inch) hole
3. Bolts

10. Route the harness through the hole you drilled in the base.

11. Install the fuse cover to the switch mount using 2 thumb screws and 2 push nuts (Figure 9).

    Note: Ensure that the push nuts are installed on the inside of the fuse cover (Figure 9).

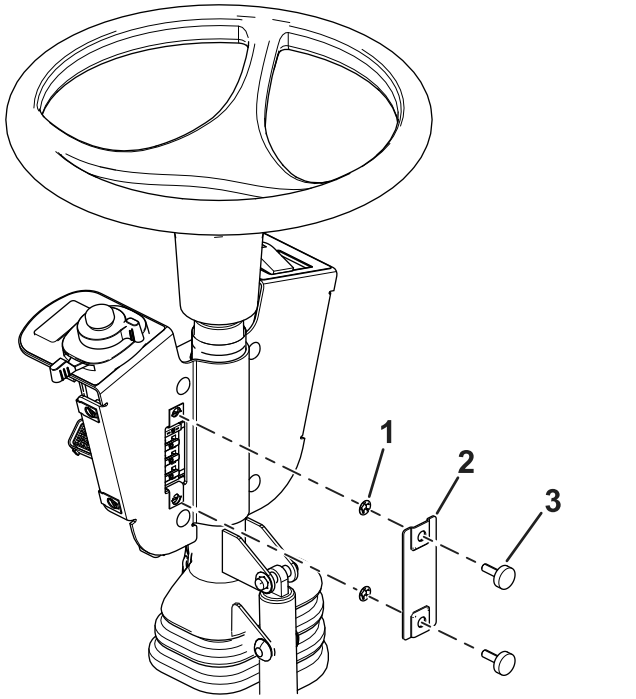

Figure 9

1. Push nut
2. Fuse cover
3. Thumb screw

12. Adjust the control assembly so that the switches are accessible.
13. Tighten all the fasteners.
14. Install the control cover to the switch mount using 2 push rivets and 6 hex-head screws (1/4 x 3/4 inch) as shown in Figure 10.

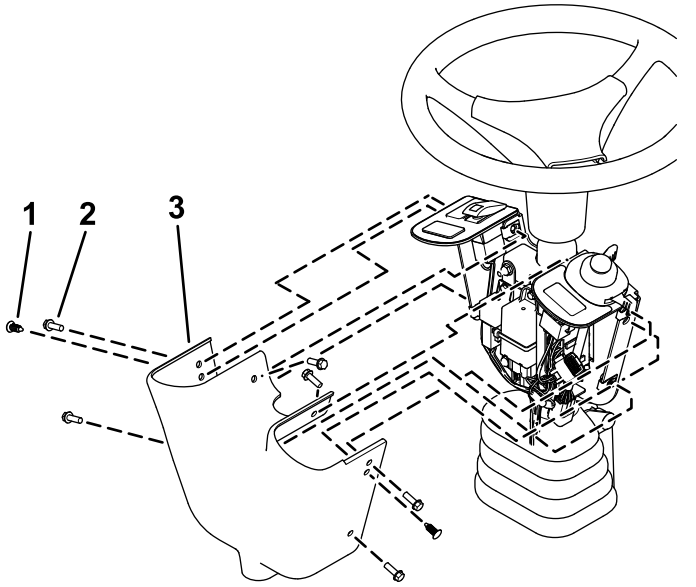

Figure 10

1. Push rivet
2. Hex-head screw
3. Control cover

4

Installing the Front Components

Parts needed for this procedure:

1	Left light mount
1	Right light mount
1	Left light assembly
1	Right light assembly
6	Button-head bolt (1/4 x 5/8 inch)
4	Locknut (3/8 inch)
1	Light cross mount

Procedure

1. Remove the tie-down bracket from the platform (Figure 11).

   Retain the parts.

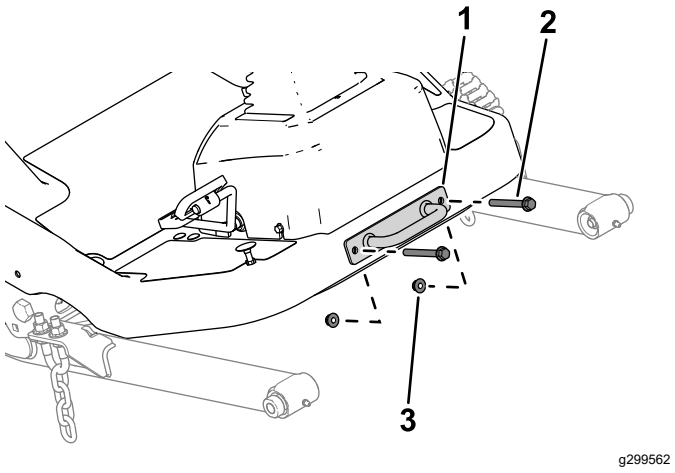

Figure 11

1. Tie-down bracket
2. Bolt
3. Nut

2. Secure the light cross mount to the platform using the previously removed bolts, nuts, and tie-down bracket (Figure 12).

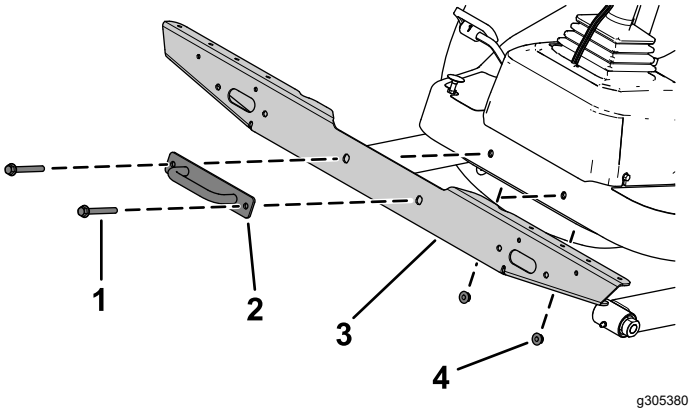

Figure 12

1. Bolt
2. Tie-down bracket
3. Light cross mount
4. Nut

3. Secure the left light mount and right light mount to the light cross mount using 3 button-head bolts (1/4 x 5/8 inch) through the speed nuts on each side (Figure 13).

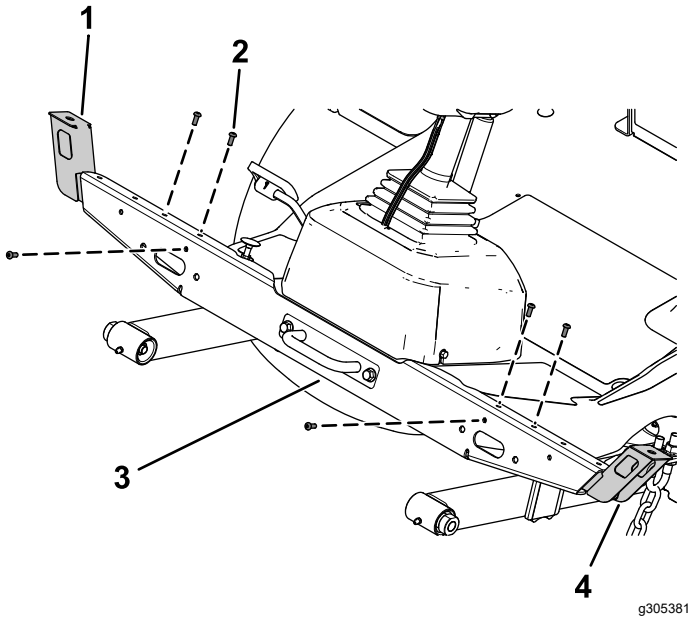

Figure 13

1. Right light mount
2. Button-head bolt (1/4 x 5/8 inch)
3. Light cross mount
4. Left light mount

4. Secure the left light assembly and right light assembly to the left light mount and right light mount using the lock washer and hex nut on the light assemblies (Figure 14).

   Note: Install the lights with the low beam toward the outer edge of the machine.

   Look at the bottom of the lights for high beam and low beam orientation.

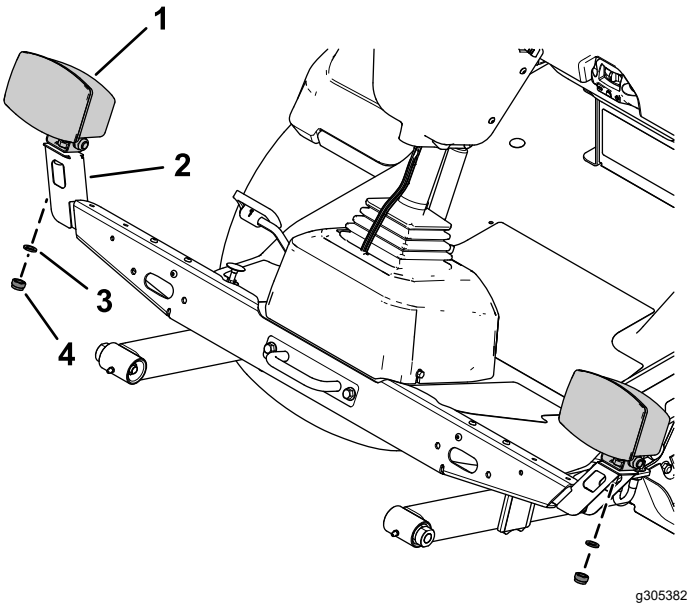

Figure 14

1. Light assembly
2. Light mount
3. Lock washer
4. Hex nut

5

Installing the Rear Components

Parts needed for this procedure:

1	Left mount
1	Right mount
1	Left short mount
1	Right short mount
1	Right long mount
6	Carriage bolt (5/16 x 3/4 inch)
6	Flange nut (5/16 inch)
4	Carriage bolt (1/4 x 5/8 inch)
9	Locknut (1/4 inch)
2	Inner mount assembly
2	Taillight
4	Pan-head screw (#10 x 1-1/4 inches)
4	Flange nut (#10)
4	Hex-head bolt (3/8 x 3-1/4 inches)
4	Locknut (3/8 inch)
1	Marker mount
1	Speed-plate mount
5	Carriage bolt (1/4 x 1/2 inch)
1	Horn mount bracket
1	Horn
3	Speed decal
1	Left light housing
1	Right light housing

Procedure

1. Remove the flange-head bolt (3/8 x 3 inches) and flange nut (3/8 inch) securing the bumper to the rear tube frame on each side of the bumper (Figure 15).

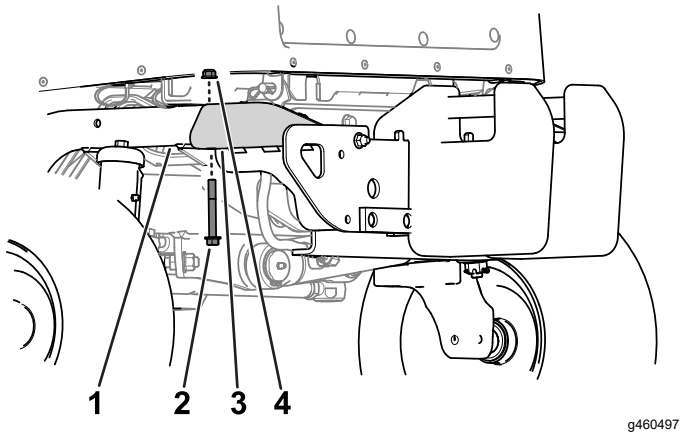

Figure 15

1. Rear tube frame
2. Flange-head bolt (3/8 x 3 inches)
3. Bumper
4. Flange nut (3/8 inch)

2. Slightly raise the battery tray and insert the left mount and right mount between the battery tray and the tube frame (Figure 16).

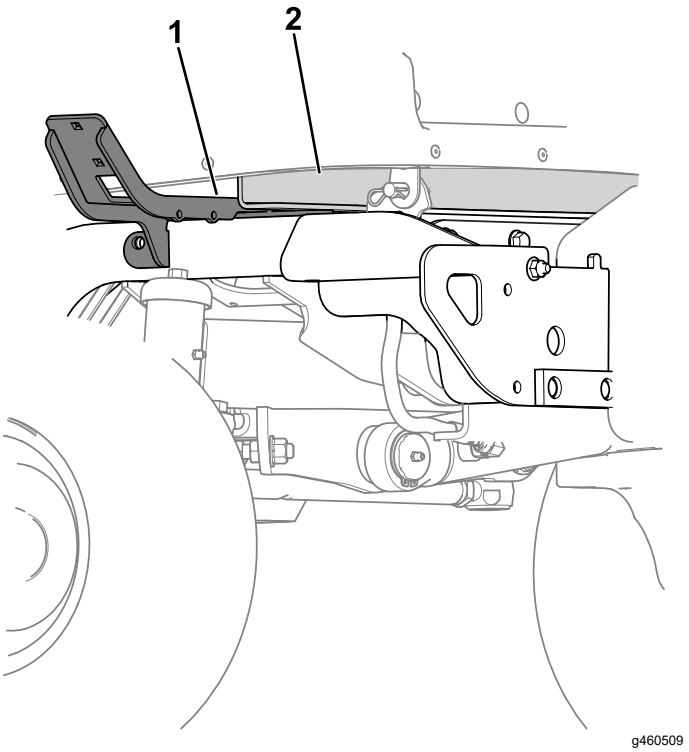

Figure 16

1. Left mount
2. Battery tray

3. Secure the left mount and right mount to rear frame tubes using 4 hex-head bolts (3/8 x 3-1/4

inches) and 4 locknuts (3/8 inch) on each side (Figure 17).

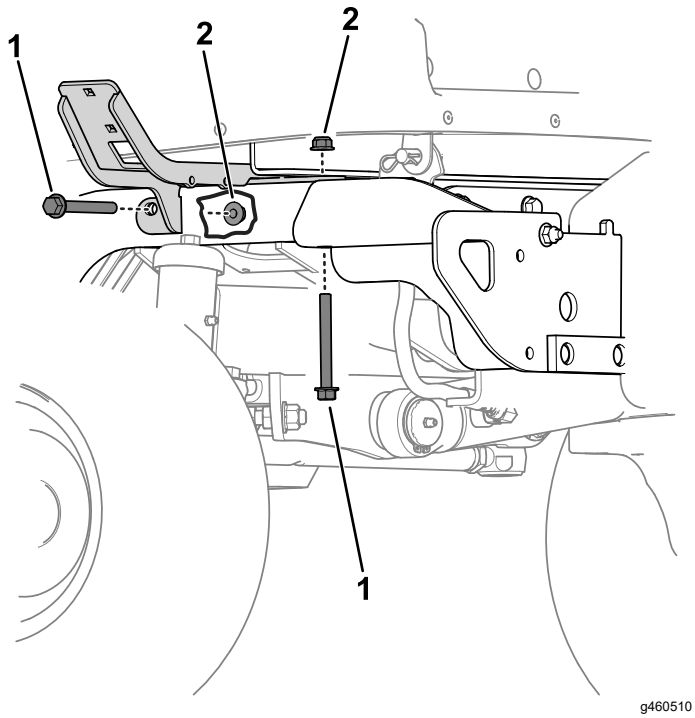

Figure 17

1. Locknut (3/8 inch)
2. Hex-head bolt (3/8 x 3-1/4 inches)

4. Secure the left short mount the left mount using 2 carriage bolts (5/16 x 3/4 inch) and 2 flange nuts (5/16 inch) as shown in Figure 18.

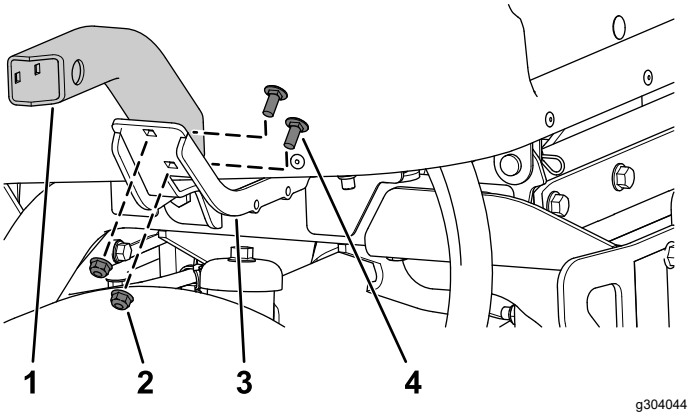

Figure 18

1. Left short mount
2. Flange nut (5/16 inch)
3. Left mount
4. Carriage bolt (5/16 x 3/4 inch)

5. Perform the following step for the cutting unit that is equipped on your machine:
   - **Model 31980 equipped:** Secure the right long mount (Figure 19) to the right mount using 2 carriage bolts (5/16 x 3/4 inch) and 2 flange nuts (5/16 inch).
   - **Model 31981 equipped:** Secure the right short mount (Figure 19) to the right mount using 2 carriage bolts (5/16 x 3/4 inch) and 2 flange nuts (5/16 inch).

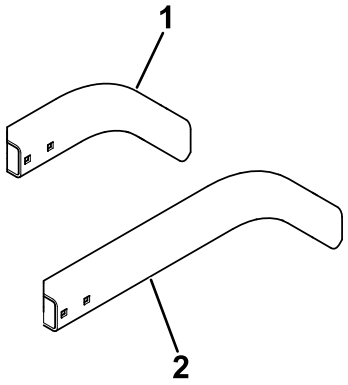

Figure 19

1. Right short mount
2. Right long mount

6. Secure the left light housing and right light housing to the left short mount and right short

mount using 4 carriage bolts (1/4 x 5/8 inch) and 4 locknuts (1/4 inch) as shown in Figure 20.

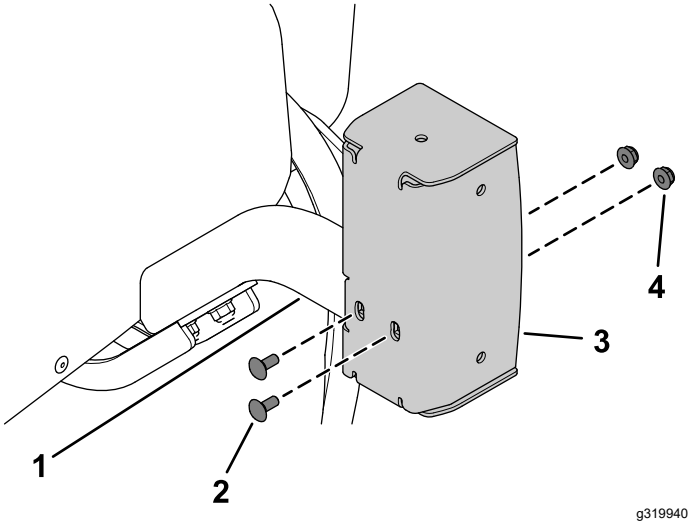

g319940

Figure 20

1. Left short mount
2. Carriage bolt (1/4 x 5/8 inch)
3. Left light housing
4. Locknut (1/4 inch)

7. Apply a speed decal to the speed-plate mount (Figure 21).

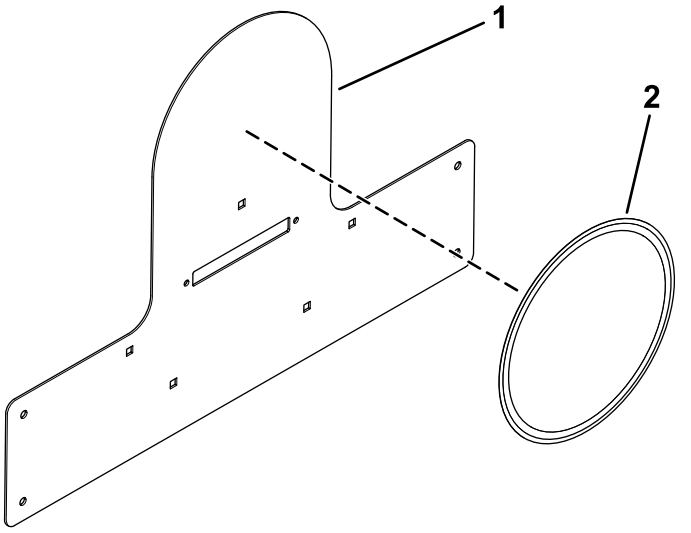

g304252

Figure 21

1. Speed-plate mount
2. Speed decal

8. Secure the speed-plate mount to the marker mount using 5 carriage bolts (1/4 x 1/2 inch) and 5 locknuts (1/4 inch) as shown in Figure 22.

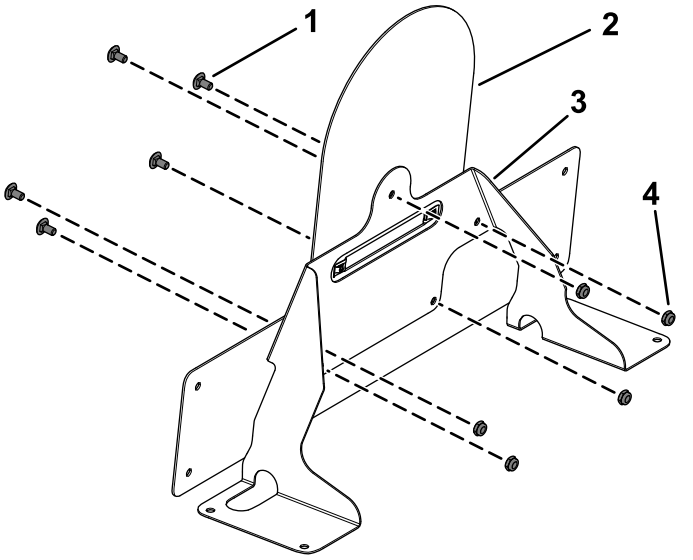

g304257

Figure 22

1. Carriage bolt (1/4 x 1/2 inch)
2. Speed-plate mount
3. Marker mount
4. Locknut (1/4 inch)

9. Remove the 12 plastic plugs shown in Figure 23 from the hood.
   - Retain the 5 plugs shown in Figure 23
   - Discard the 7 plugs shown in Figure 23

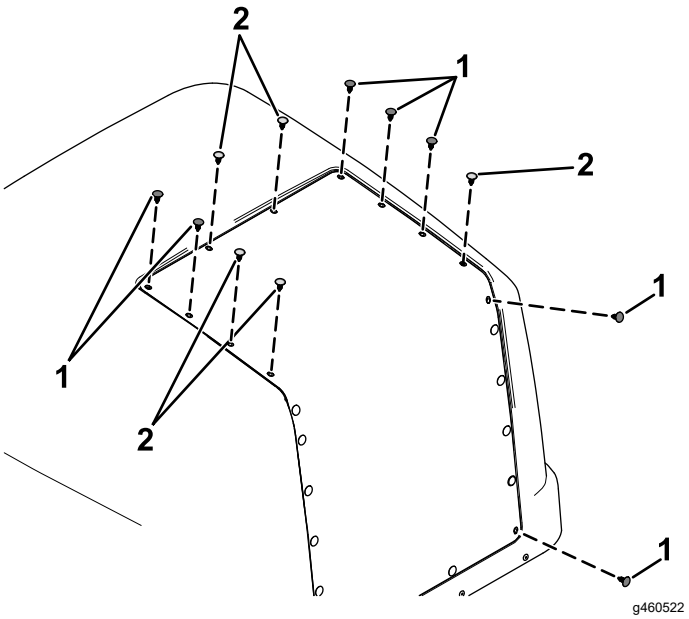

g460522

Figure 23

1. Plastic plug—discard
2. Plastic plug—retain

10. Remove the plate under the hood cover (Figure 24).

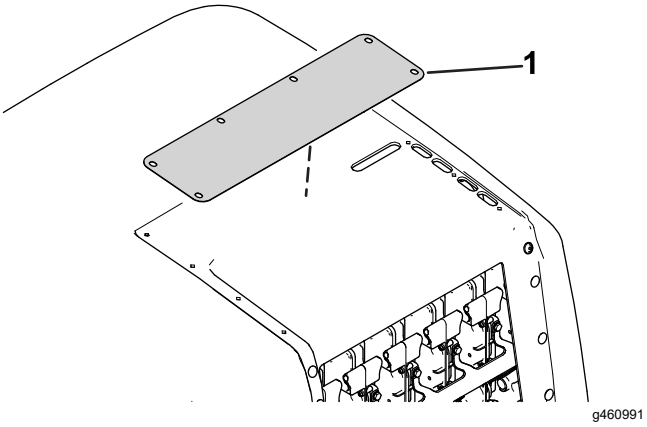

Figure 24

1. Plate

11. Install the 5 plugs to the hood cover that you retained in step 9.
12. Raise the hood; refer to the traction unit *Operator's Manual*.
13. Use the existing nut on the horn to secure the horn to the horn mount bracket (Figure 25).

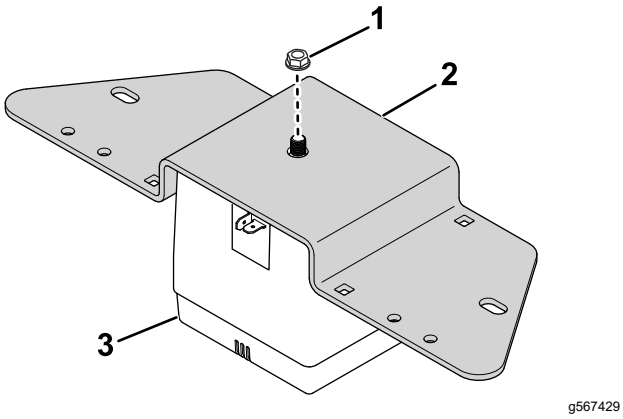

Figure 25

1. Nut
2. Mount bracket
3. Horn

14. Use 2 carriage bolts (5/16 x 3/4 inch) and 2 flange nuts (5/16 inch) from the hood support bracket to secure the horn mount bracket to the traction-unit frame (Figure 26).

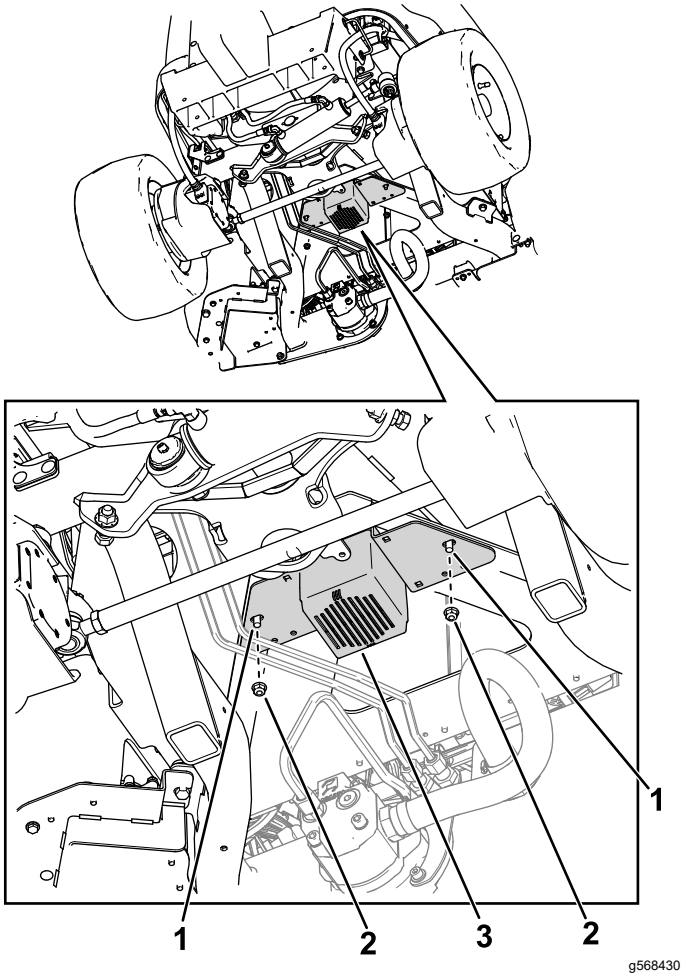

Figure 26

1. Bolt
2. Nut
3. Horn on mount bracket

15. Apply the speed decals to each side of the hood (Figure 27).

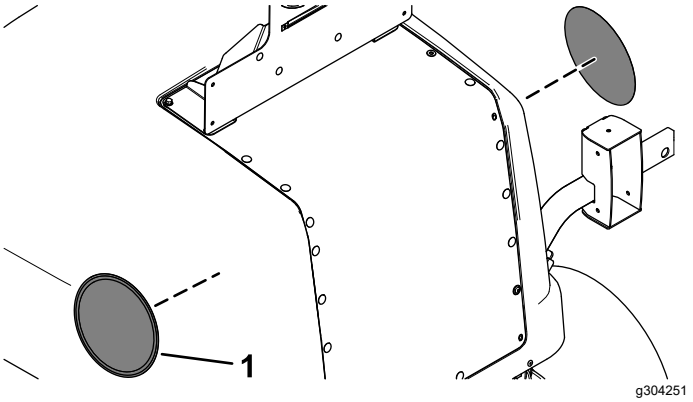

Figure 27

1. Speed decal

6

Routing the Light Wire Harness

Parts needed for this procedure:

1	Light wire harness
3	Flat washer
3	Hex-socket screw (1/4 x 1 inch)
3	Clamp
3	Flange nut (1/4 inch)
2	Inner mount assembly
2	Taillight
4	Pan-head screw (#10 x 1-1/4 inches)
4	Flange nut (#10)
8	Button-head bolt (1/4 x 3/4 inch)
1	Plate light
2	Screw (#6 x 1 inch)
2	Locknut (#6)
2	Back mount
4	Flange-head bolt (1/4 x 3/4 inch)
4	Locknut (1/4 inch)
9	Cable tie

Procedure

Refer to the following figures and instructions for routing the light wire harness.

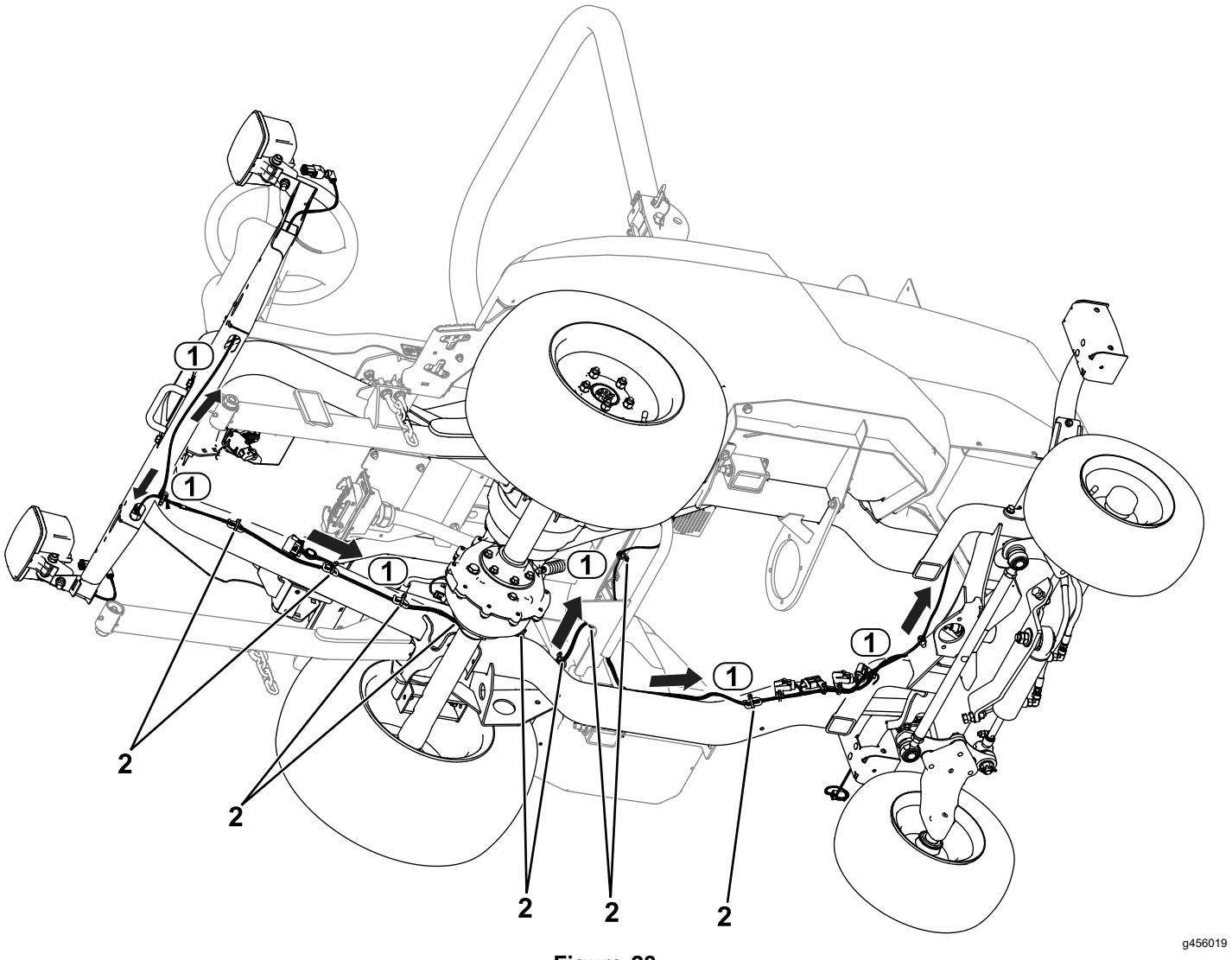

Figure 28

1. Wire-harness routing
2. Cable ties

---

1. Route the wire-harness connector labeled LH HEADLIGHT (P04) to the left side of the unit (Figure 28). Connect the harness to the light.
2. Route the wire-harness connector labeled RH HEADLIGHT (P05) to the right side of the unit (Figure 28). Connect the harness to the light.
3. Route the wire-harness connector labeled LH REAR LIGHT (P01) to the rear left side of the unit (Figure 28).
4. Route the wire-harness connector labeled RH REAR LIGHT (P02) to the rear right side of the unit (Figure 28).
5. Route the wire-harness connector labeled HORN (P13) to the horn. Connect the harness to the horn (Figure 29).

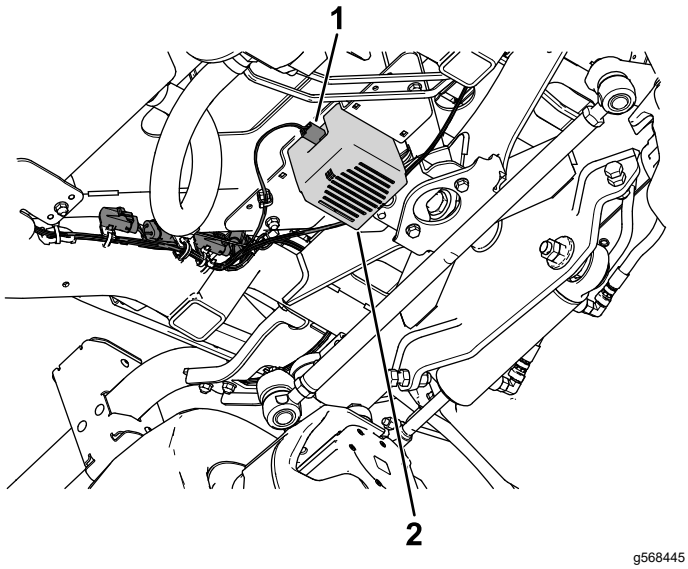

Figure 29

1. Wire-harness connector—HORN (P13)
2. Horn

6. Secure the taillights to the inner mount assemblies using 4 pan-head screws (#10 x 1-1/4 inches) and 4 flange nuts (#10) as shown in Figure 30.

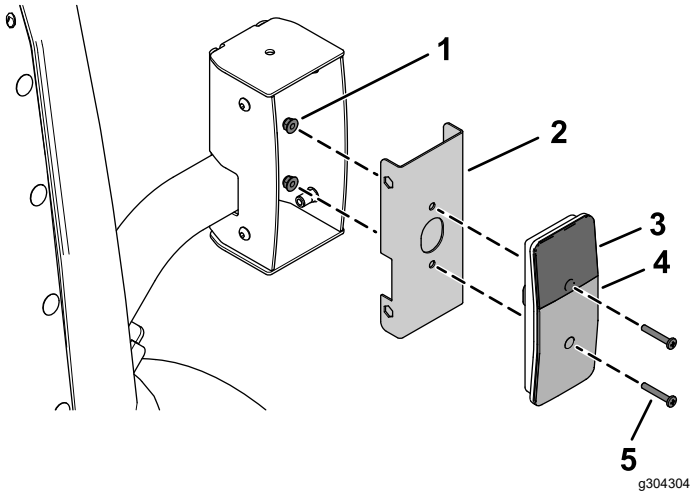

Figure 30

1. Flange nut (#10)
2. Inner mount assembly
3. Amber lens
4. Red lens
5. Pan-head screw (#10 x 1-1/4 inches)

7. Connect the wire-harness connector labeled LH REAR LIGHT (P01) to the rear light (Figure 28).
8. Connect the wire-harness connector labeled RH REAR LIGHT (P02) to the rear light (Figure 28).
9. Secure the assembled taillights to the taillight housings using 8 button-head bolts (1/4 x 3/4 inch) as shown in Figure 31.

   Ensure that you install the taillights with the yellow lens on top (Figure 30 and Figure 31).

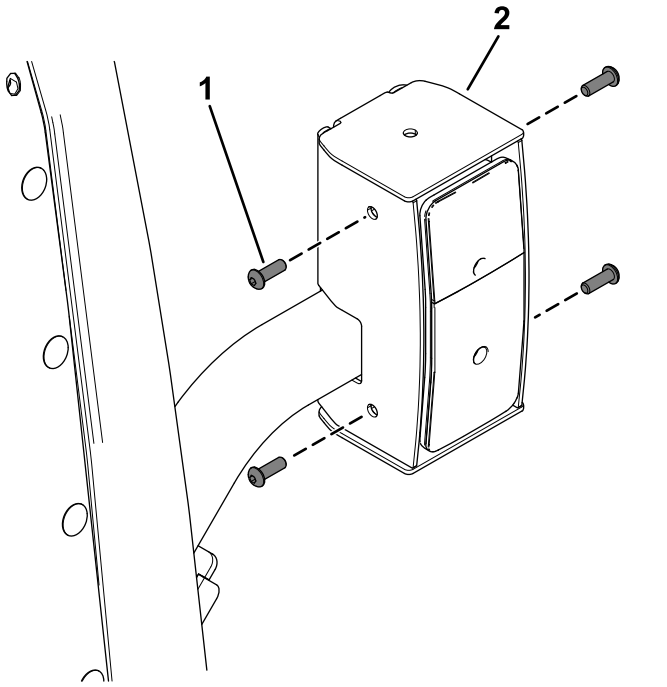

Figure 31

1. Button-head bolt (1/4 x 3/4 inch)
2. Taillight assembly

10. Route the wire-harness connector labeled LICENSE PLATE LIGHT (P14) through the hood and connect it to the license light (Figure 32).

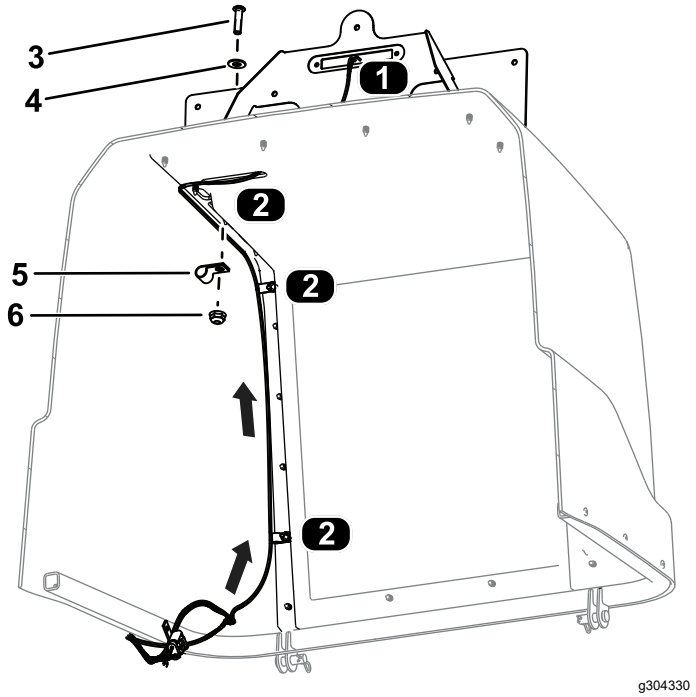

Figure 32

View from the bottom of the hood

1. Wire-harness connnection—license plate
2. Clamp locations
3. Hex-socket screw (1/4 x 1 inch)
4. Flat washer
5. Clamp
6. Flange nut (1/4 inch)

11. Secure the wire harness to the hood using 3 hex-socket screws (1/4 x 1 inch), 3 flat washers, 3 clamps, and 3 flange nuts (1/4 inch) as shown in Figure 32.
12. Secure the assembled speed-plate mount to the hood using 4 flange-head bolts (1/4 x 3/4 inch), 2 back mounts, and 4 locknuts (1/4 inch) as shown in Figure 33.

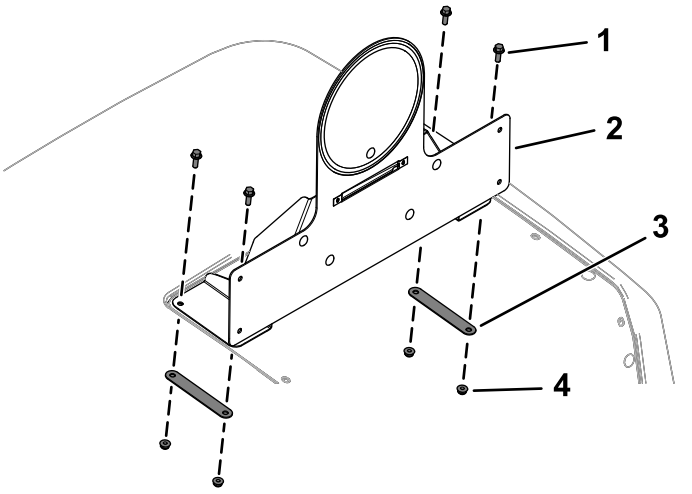

Figure 33

1. Flange-head bolt (1/4 x 3/4 inch)
2. Assembled speed-plate mount
3. Back mount
4. Locknut (1/4 inch)

13. Secure the plate light to the assembled speed-plate mount using 2 locknuts (#6) and 2 screws (#6 x 1 inch) as shown in Figure 34.

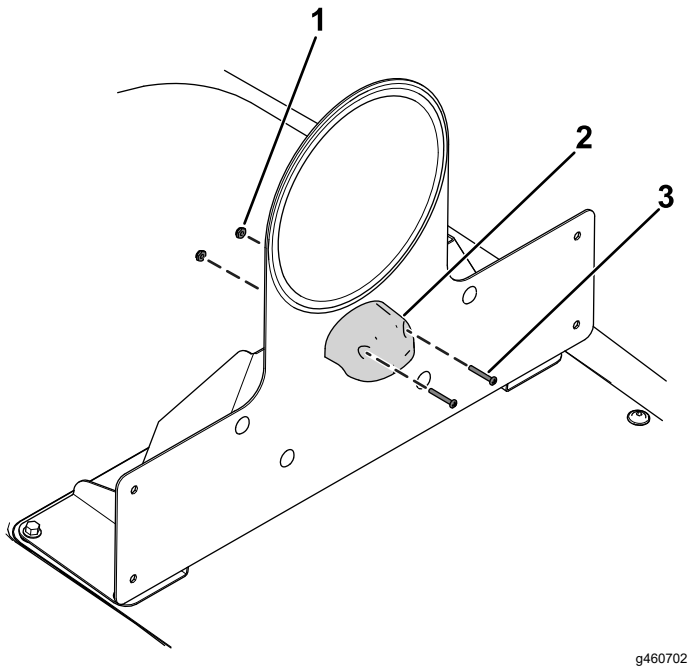

Figure 34

1. Locknut (#6)
2. Plate light
3. Screw (#6 x 1 inch)

14. Connect the wire harness to the plate light (Figure 34).
15. Install cable ties to the wire harness as shown in Figure 28.

7

Routing the Control Wire Harness

Parts needed for this procedure:

1	Control wire harness
2	Cable tie

Procedure

1. Route the control wire harness through the platform opening (Figure 35).

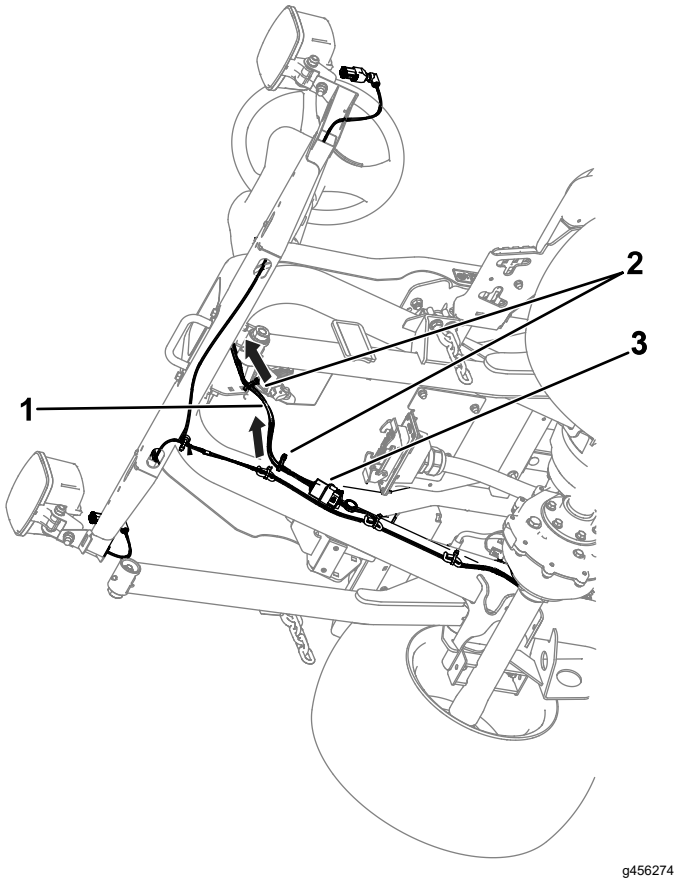

Figure 35

1. Control wire harness
2. Cable ties
3. Connection—control wire harness and light wire harness

2. Connect the control wire-harness connector labeled PLATFORM HARNESS (P71) to light wire-harness connector labeled TO POD HARNESS (P03) (Figure 35).
3. Install cable ties to the control wire harness as shown in Figure 35.

8

Installing the Serial Plate

For Germany Only

Parts needed for this procedure:

1	Serial plate
1	Serial plate tape

Procedure

1. Stamp the serial number into the frame.

   The text size must be 7 mm (1/4 inch) or larger.
2. Stamp the appropriate information into the serial plate.
3. Wipe down the bottom of the frame and serial plate with an alcohol-based wipe (Figure 36).

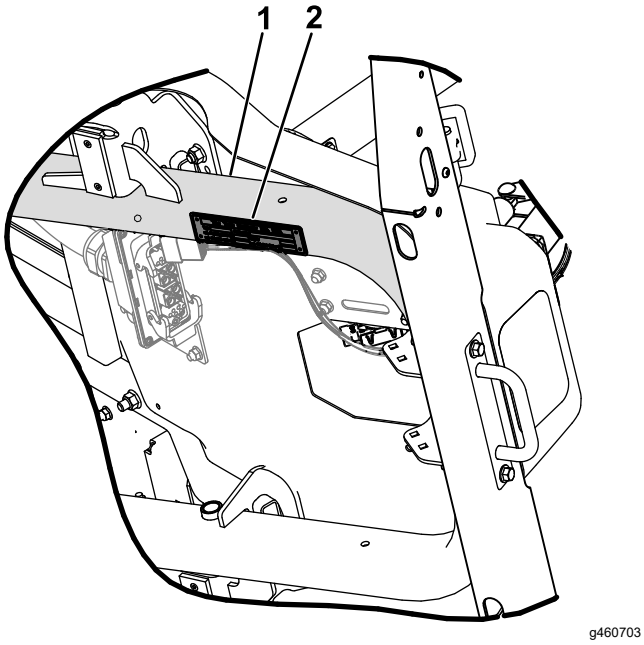

Figure 36

1. Clean the bottom of the frame.
2. Serial plate

4. Apply the tape to the serial plate.
5. Install the plate to the frame (Figure 37).

   Use the dimensions shown in Figure 38.

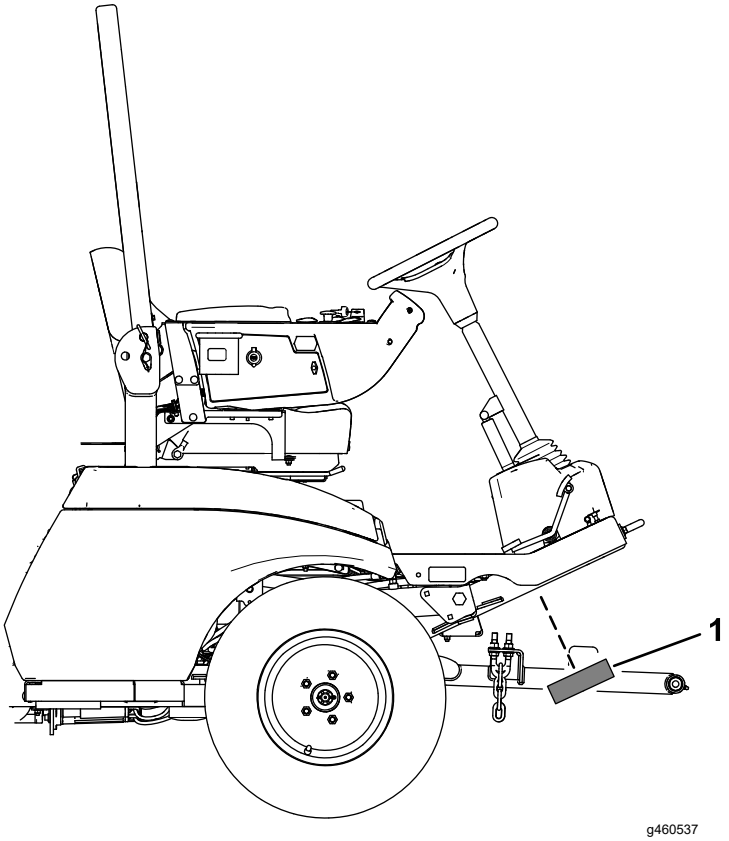

Figure 37

1. Serial plate

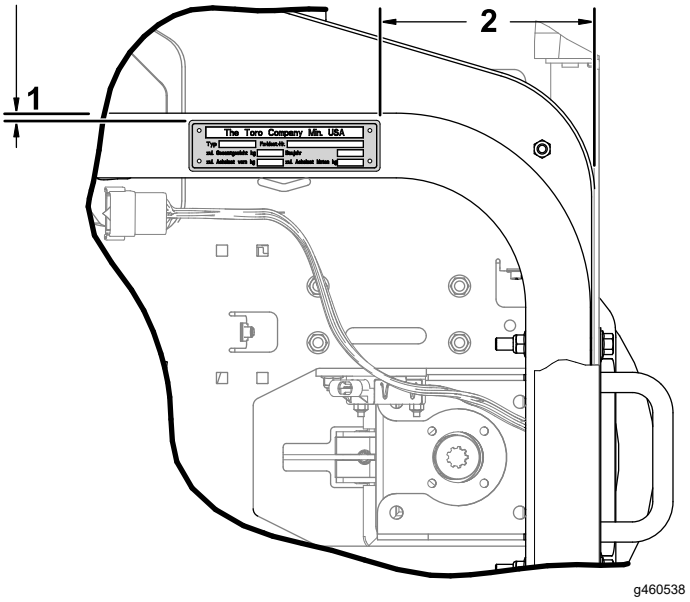

Figure 38

1. 2.5 to 8.1 mm (1/8 to 5/16 inch)
2. 162 to 168 mm (6-3/8 to 6-5/8 inches)

9

Installing the High-Voltage Decals

Parts needed for this procedure:

11	High-voltage decal

Procedure

Apply the high-voltage decals to the following areas on traction unit and cutting unit:

- Cutting-unit motors (Figure 39)
- Cutting-unit controller cover (Figure 39)
- Hood (Figure 40 and Figure 41)
- Charger port/power-disconnect switch (Figure 41)
- Channel supports in the battery compartment (Figure 40)
- **For Groundsmaster e3300 machines only:** Rear wheel motors (Figure 42)

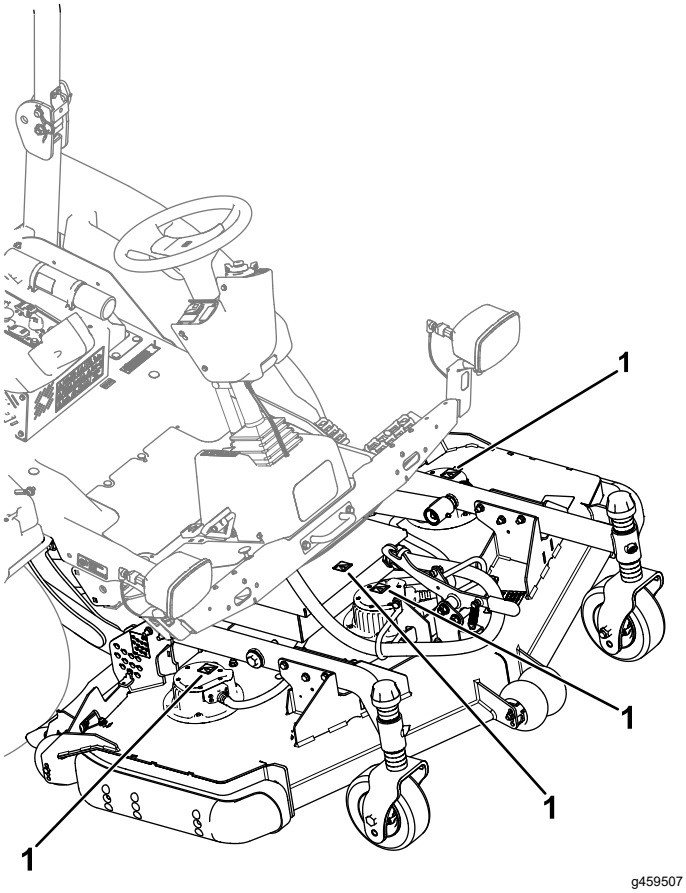

Figure 39

1. High-voltage decals

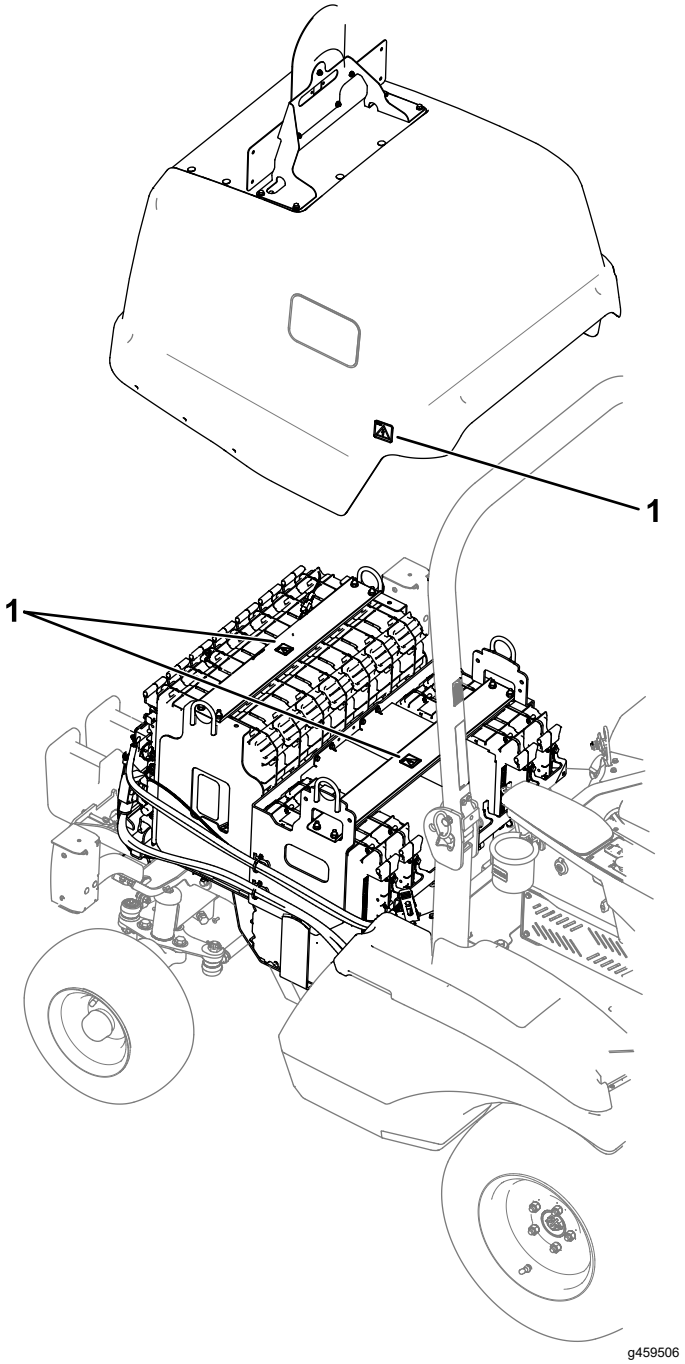

Figure 40

1. High-voltage decals

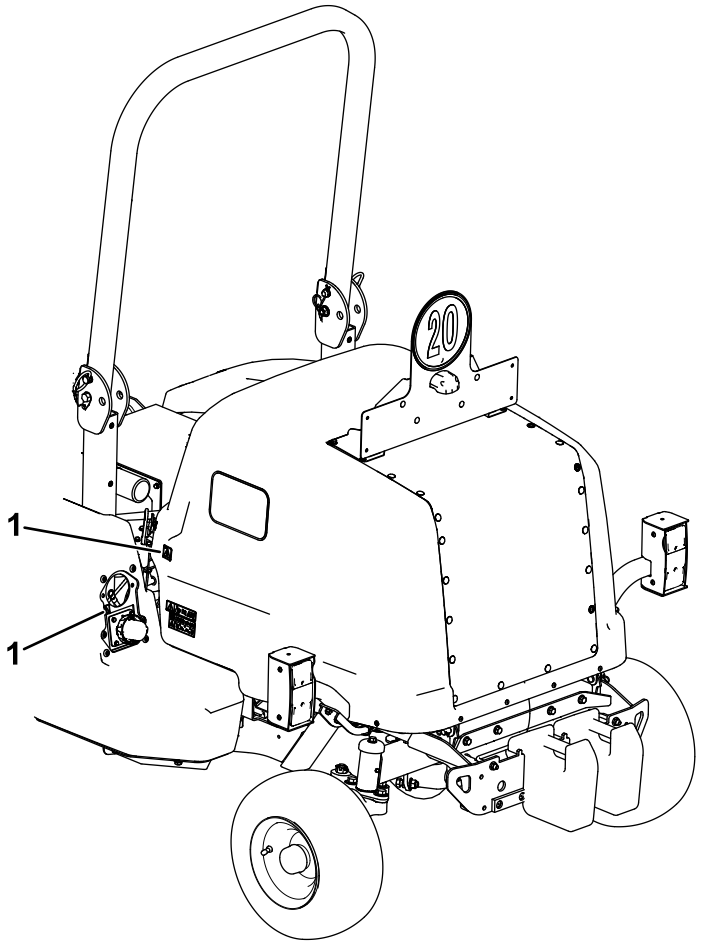

Figure 41

1. High-voltage decals

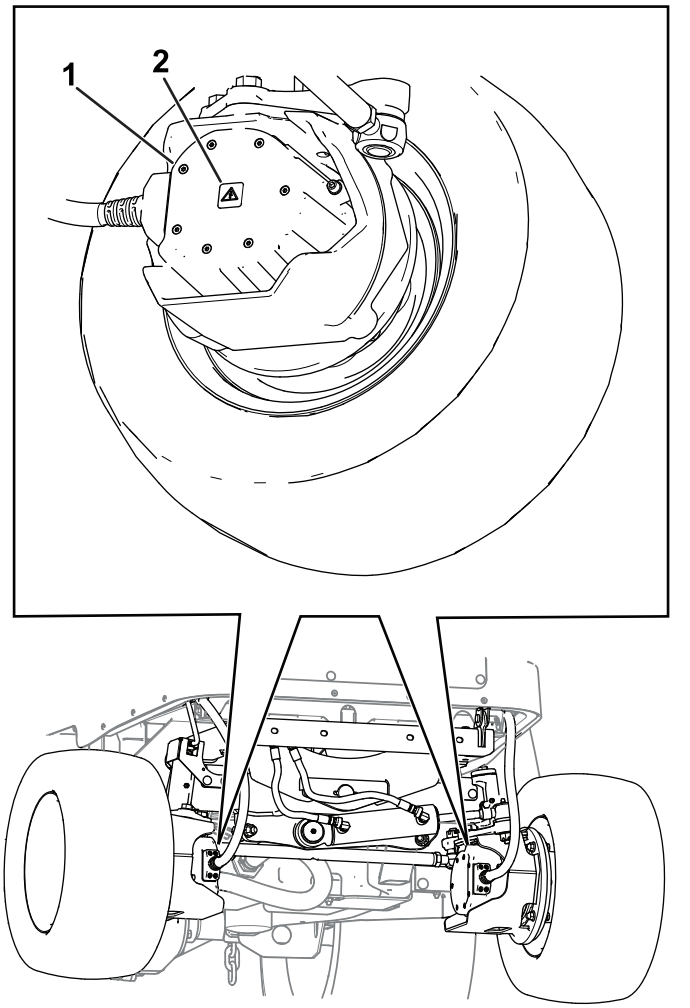

Figure 42

1. Wheel motor
2. High-voltage decal

10

Installing the Tube Wraps

Parts needed for this procedure:

1	Tube wrap (147 cm or 58 inches)
3	Tube wrap (51 cm or 20 inches)

Procedure

- Install a tube wrap (147 cm or 58 inches) to the cutting-unit connector cable.
- Install tube wraps (51 cm or 20 inches) to the 3 cutting-unit motor cables.

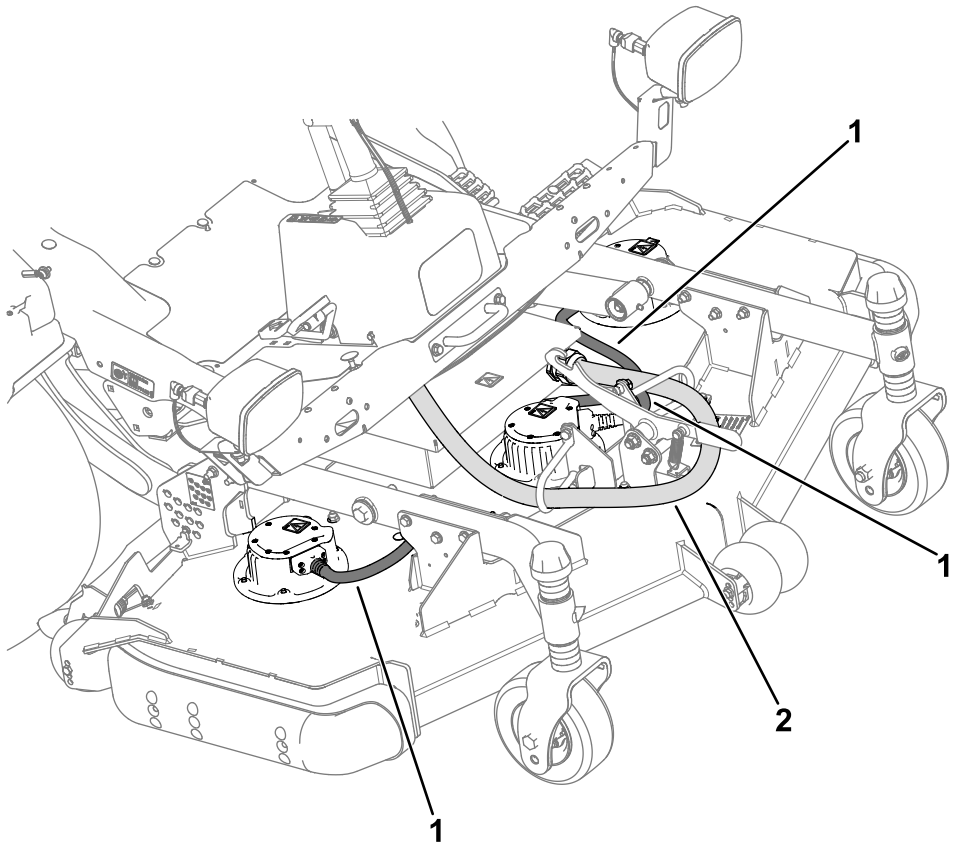

g461336

Figure 43

1. Tube wraps (51 cm or 20 inches)
2. Tube wrap (147 cm or 58 inches)

11

Completing the Installation

No Parts Required

Procedure

Turn the battery-disconnect switch to the ON position.

Notes:



Count on it.