Form No. 3477-963 Rev A

TORO®

Count on it.

Parts Catalog

North American Road Light Kit

Groundsmaster® e3200 serial number 417500000 and up or e3300 Series Traction Unit

Model No. 31816

Register at www.Toro.com.
Original Instructions (EN)

3477-963 A

Ordering Replacement Parts

To order replacement parts, please supply the part number, the quantity, and the description of each part desired.

Understanding Reference Numbers

Each identified part in an illustration has a reference number. The reference number for a part also appears in the parts list, along with other information about the part.

This catalog uses two special reference number formats, one to indicate parts in a service assembly and another to indicate the quantity of a given part in an illustration.

Service Assembly Reference Numbers

Parts in service assemblies have reference numbers in the form a:b. The a represents the reference number of the entire service assembly and the b represents a sequential number unique to each part within the service assembly.

For example, a wheel assembly might be identified by reference number 6, the tire by 6:1, the valve by 6:2, and the wheel by 6:3. When you order the assembly identified by reference number 6, you receive all parts identified by reference numbers 6:1,6:2, and 6:3. However, you may also order any part individually. Reference numbers of this type appear in illustration and in parts lists.

Reference Numbers Indicating Quantity

In an illustration, if a reference number indicates more than one part, the reference number has the form nX y. The n represents the quantity of the part, the X is the multiplication symbol, and the y represents the reference number.

For example, in an illustration, the reference number 2X 37 means that two of the parts identified by reference number 37 are indicated.

Contents

Front Light Mount Assembly 4
Light Mount Kit Assembly No. 140-6698 5
Rear Light Assembly 6
Switch Assembly 7
Wire Harness Routing Assembly 8
Wire Harness Assembly No. 122-4078 9

© 2026—The Toro® Company
8111 Lyndale Avenue South
Bloomington, MN 55420

Contact us at www.Toro.com.
Printed in the USA.
All Rights Reserved

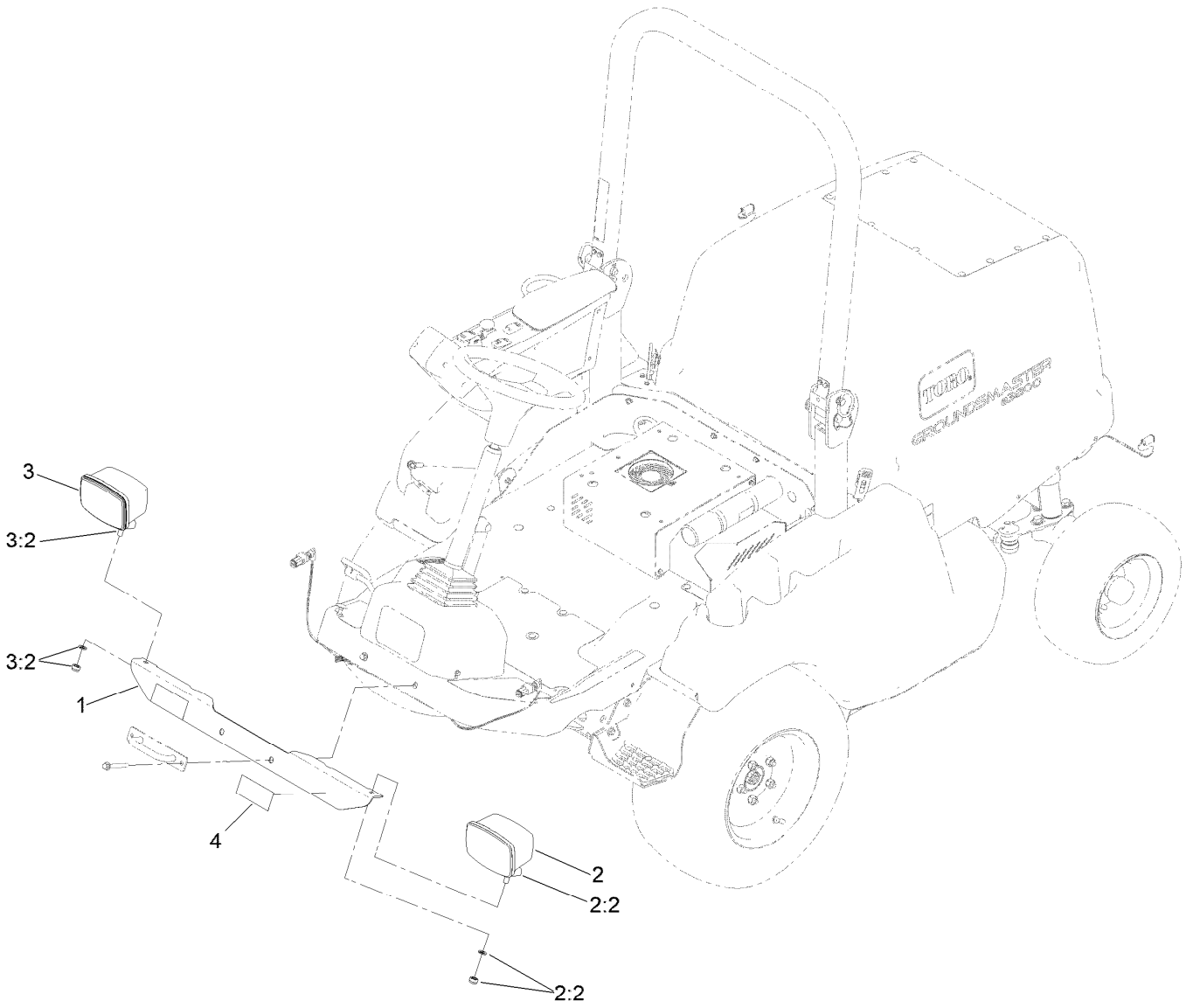

Front Light Mount Assembly

Ref.	*Part Number*	*Qty.*	*Description*
1	140-1508-03	1	Mount-Cross, Light
2	140-6773	1	LH Light ASM
2:2	140-6698	1	Light Mount Kit
3	140-6772	1	RH Light ASM
3:2	140-6698	1	Light Mount Kit
4	130-6070	2	Tape-Reflective (Yellow)

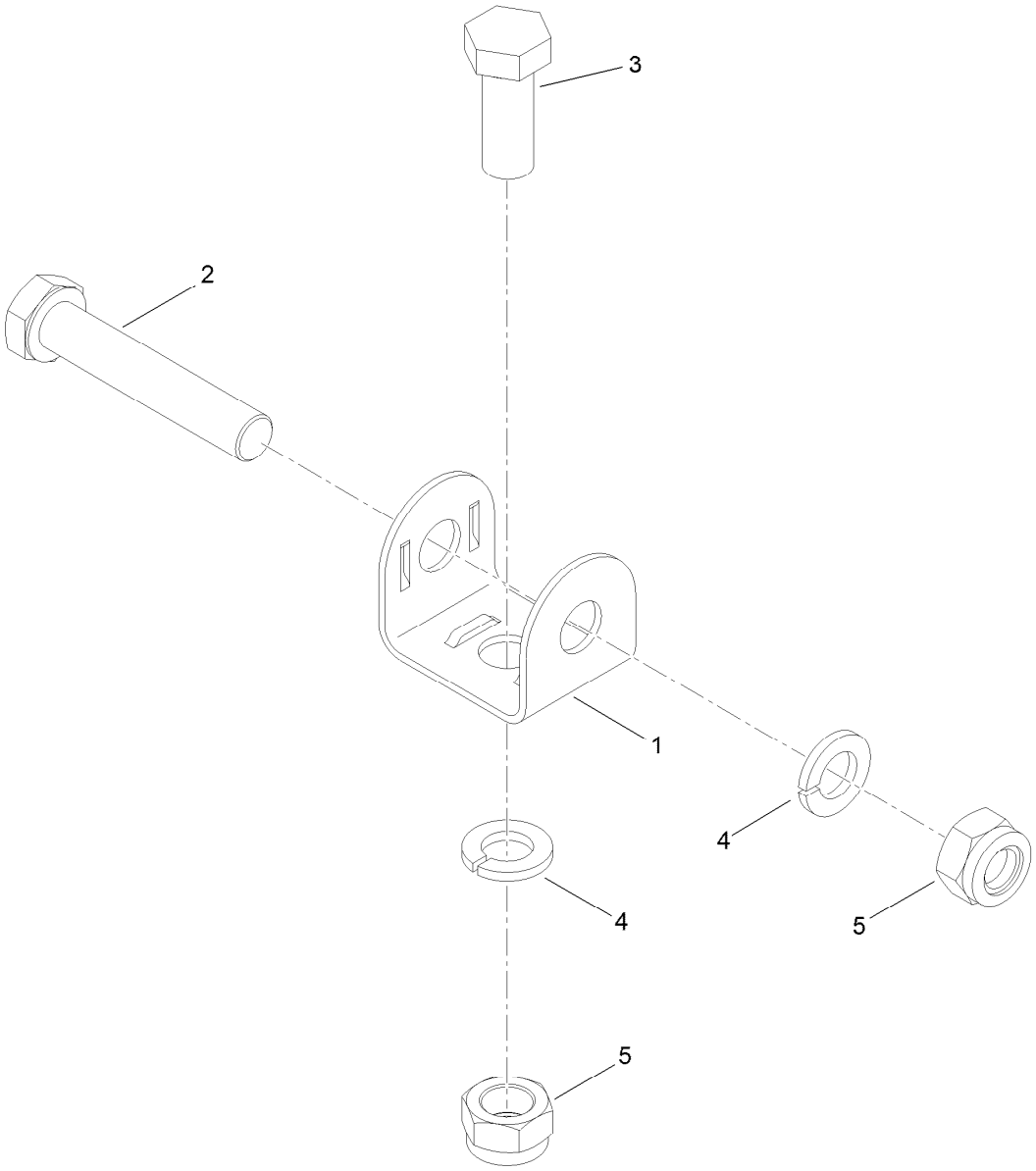

Light Mount Kit Assembly No. 140-6698

Ref.	*Part Number*	*Qty.*	*Description*
1	139-2092	1	Mount-Light
2	107-7983	1	Screw-HH
3	33116-030	1	Screw-HH
4	48-8070	2	Washer-Lock
5	33026-00	2	Nut-Hex

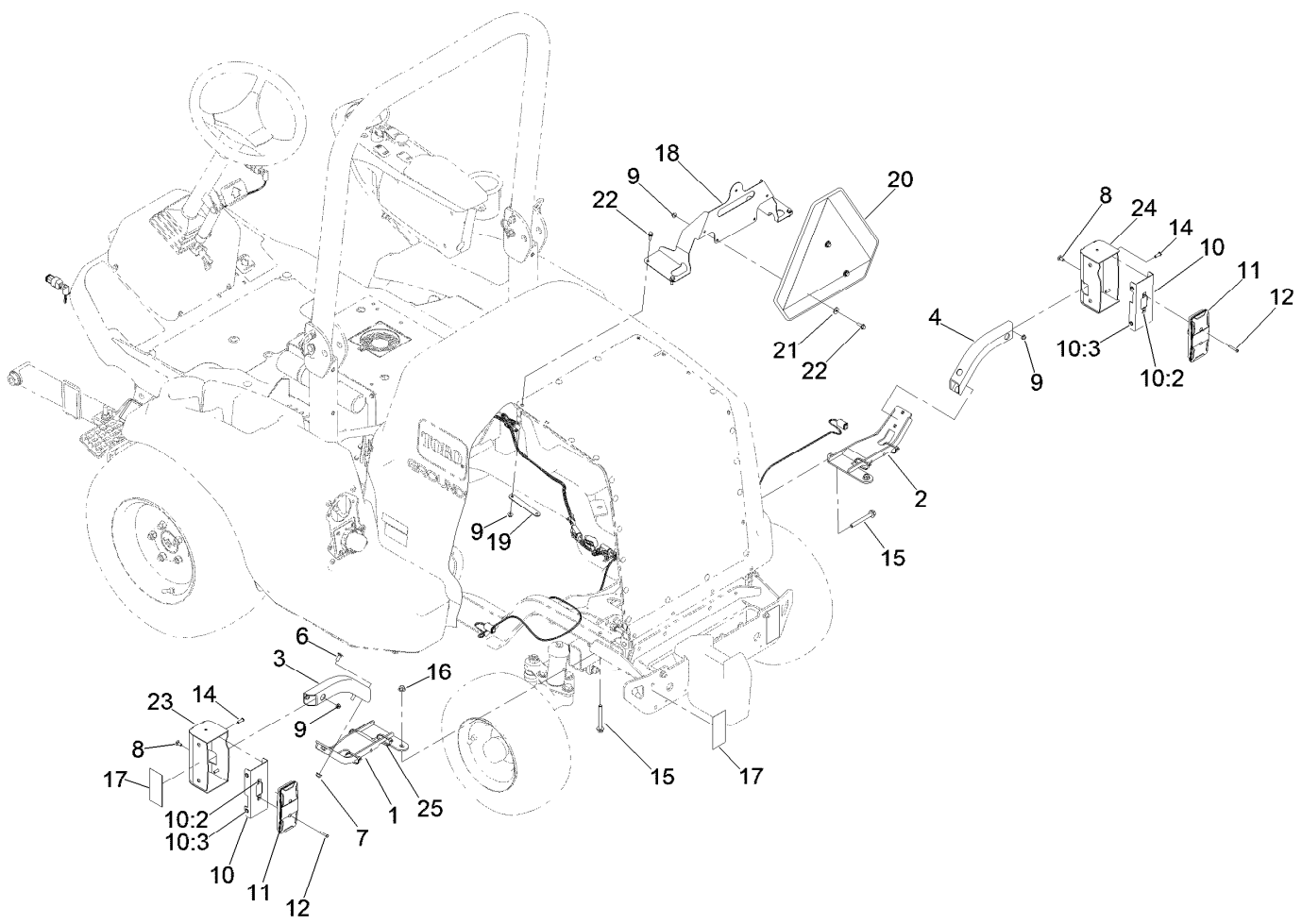

Rear Light Assembly

Ref.	Part Number	Qty.	Description
1	161-2412-03	1	Bracket-Light, LH
2	161-5075-03	1	Bracket-Light, RH
3	140-1620-03	1	Mount-LH, Short
4	140-1621-03	1	Mount-RH, Short
6	137-3061	4	Bolt-CARR
7	119-4041	4	Nut-HF
8	3229-11	4	Screw-CARR
9	104-7201	11	Nut-HF, NI
10	140-6835	2	Inner Mount ASM
10:2	107-1013	2	Nut-Speed
10:3	138-2760	4	Nut-Clinch, Hex
11	139-2071	2	Light-Rear Tail/Stop/Turn
12	3250-23	4	Screw-PPH

Ref.	Part Number	Qty.	Description
14	3274-69	8	Screw-HSBH
15	3234-41	4	Screw-HHF
16	119-4042	4	Nut-HF, NI
17	108-8014	4	Tape-Reflective (Red)
18	139-2338-03	1	Mount-Marker
19	139-2340	2	Mount-Back
20	92-7760	1	Emblem-Vehicle, Slow Moving
21	3256-78	3	Washer-Flat
22	3234-4	7	Screw-HHF
23	140-6828-03	1	Housing-Light, LH
24	140-6829-03	1	Housing-Light, RH
25	3290-378	4	Tie-Cable

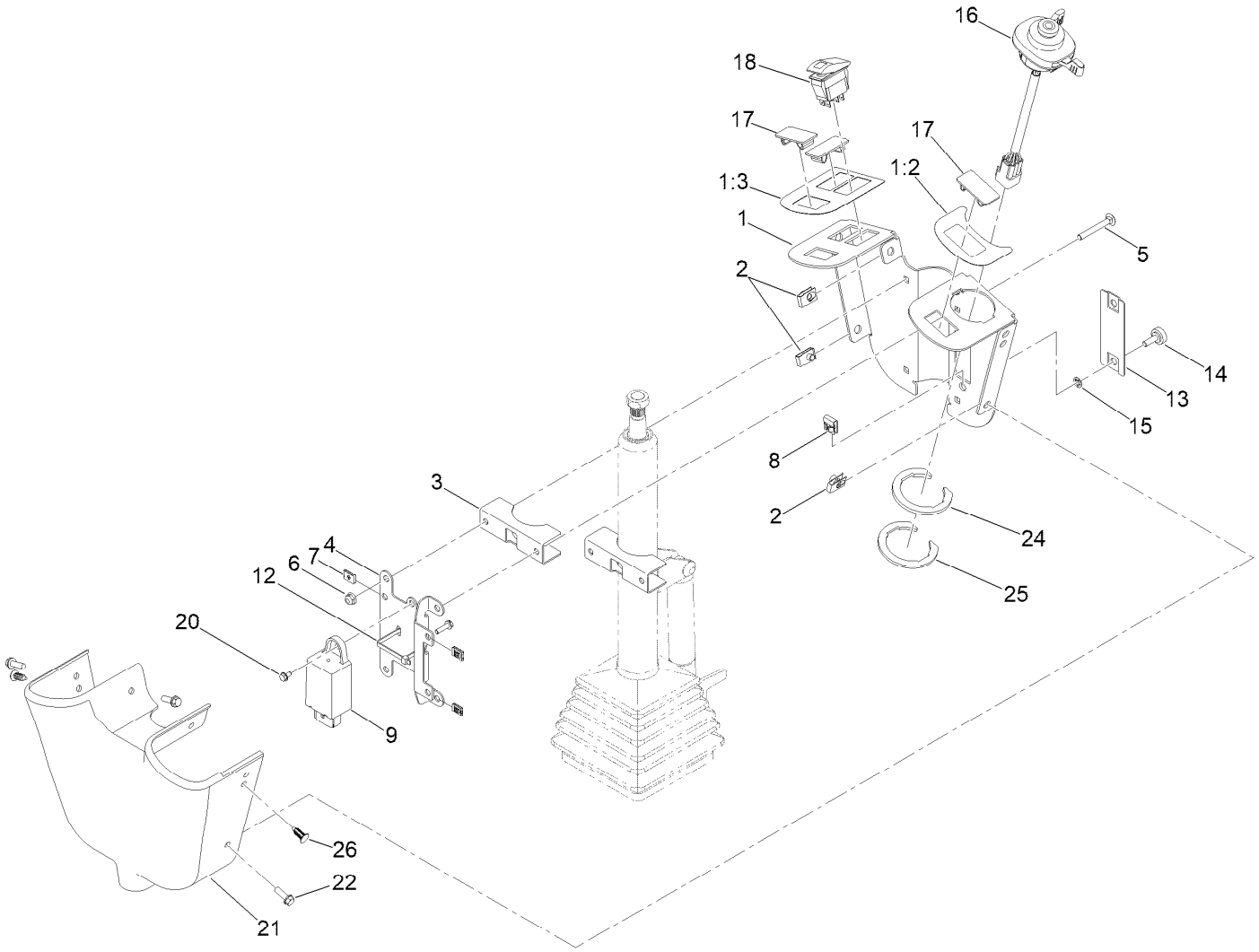

Switch Assembly

Ref.	Part Number	Qty.	Description
1	140-6606	1	Switch Mount ASM
1:2	140-1623	1	Decal-Control, LH
1:3	140-1531	1	Decal-Control, RH
2	107069	6	Clip
3	140-1505-03	2	Bracket-Mount
4	140-1506-03	1	Mount-Fuse, Plate
5	3230-33	4	Screw-CARR
6	104-7201	4	Nut-HF, NI
7	107-1013	1	Nut-Speed
8	3290-199	2	Nut-Speed
9	139-2080	1	Flasher-Dual Rate
12	3290-379	1	Tie-Cable

Ref.	Part Number	Qty.	Description
13	140-1502-03	1	Cover-Fuse
14	125-7438	2	Knob-Screw, Thumb
15	32115-15	2	Nut-Push
16	139-1950	1	Switch-Multifunction
17	99-7420	3	Plug-Hole
18	119-7769	1	Switch-Rocker, On/None/On
20	104-2065	1	Screw-HWH
21	139-2291	1	Control-Cover
22	32105-15	6	Screw-HWH
24	139-2247	1	Clip-Switch
25	139-2248	1	Clip-Switch
26	114-4899	2	Rivet-Push

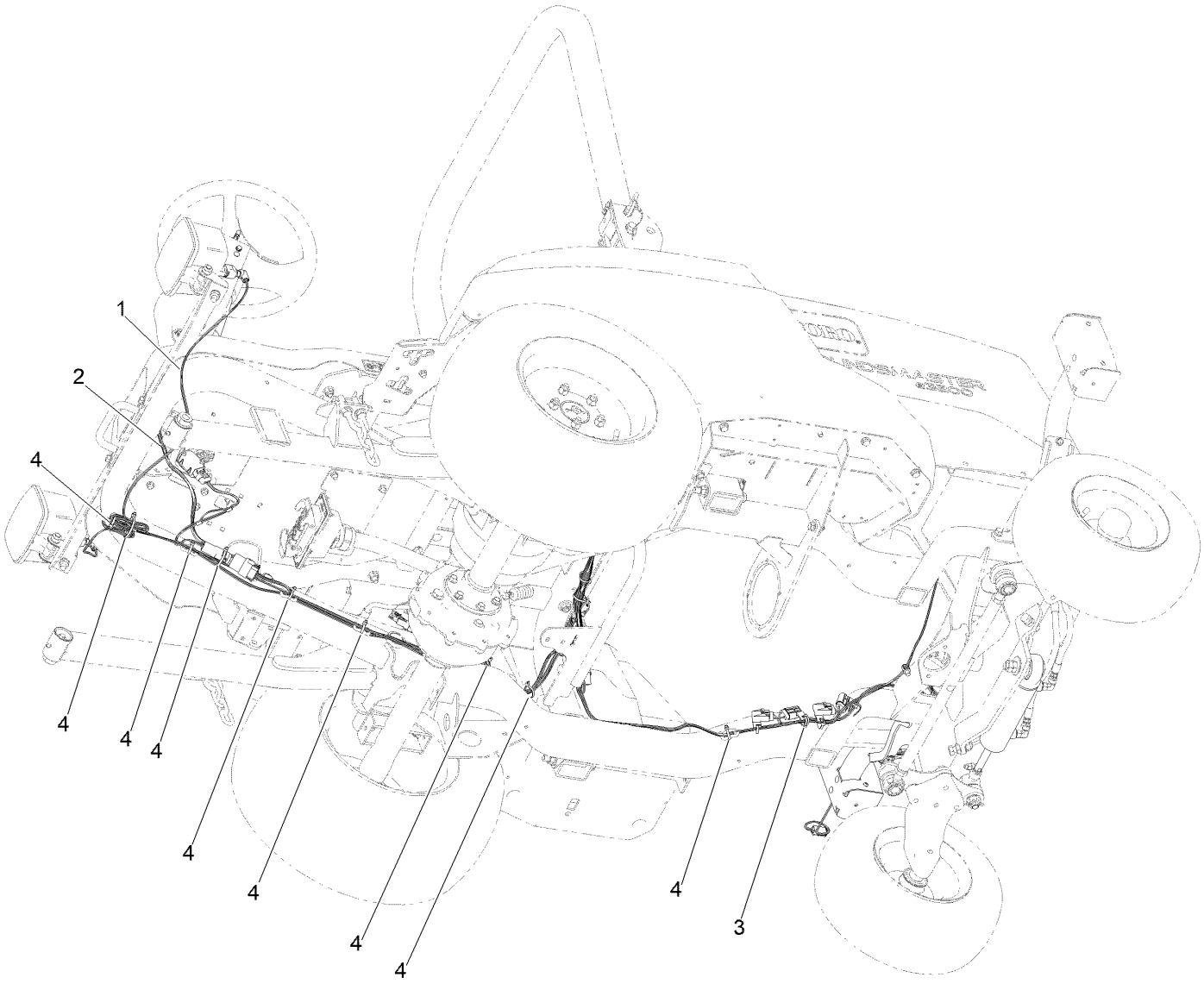

Wire Harness Routing Assembly

Ref.	*Part Number*	*Qty.*	*Description*
1	122-4078	1	Harness-Wire, Road Light Kit
2	122-2184	1	Harness-Wire, Pod
3	32180-030	1	Clip-Tie
4	3290-378	14	Tie-Cable

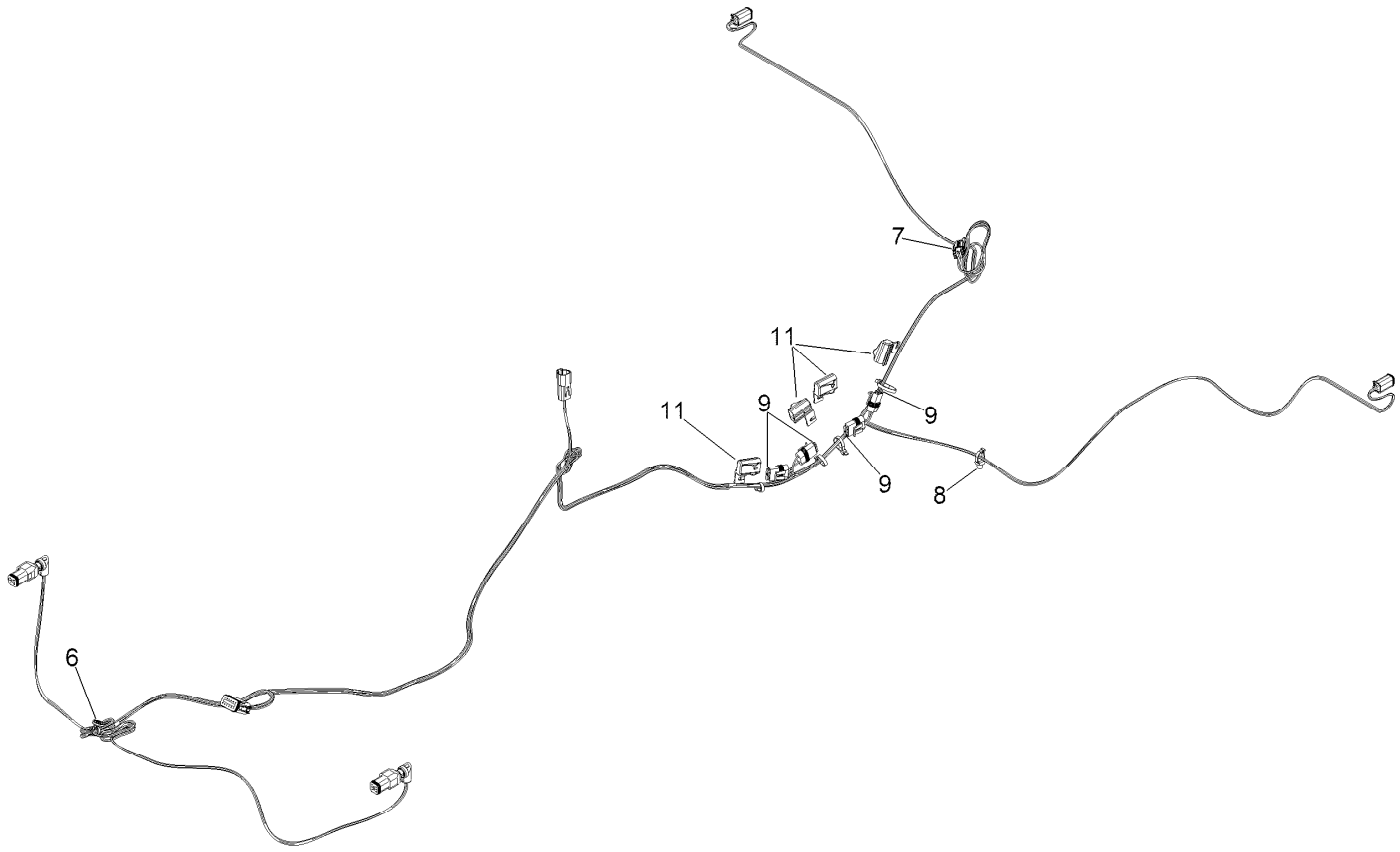

Wire Harness Assembly No. 122-4078

Ref.	*Part Number*	*Qty.*	*Description*
6	32180-139	1	Mount-Tie Wrap, Magnetic
7	32180-091	1	Cap-Dust, 2 Way
8	32180-030	2	Clip-Tie
9	110928	4	Fuse-Blade, 5 Amp
11	32180-567	4	Cover-Aptiv, Modified

Notes:

Notes:



Count on it.