Form No. 3350–803

62″ Guardian® Recycler® Mower

Groundsmaster® 200 Series

Model No. 30569—Serial No. 240000001 and Up

Operator’s Manual

CE

English (EN, GB)

Contents

	Page
Introduction	2
Safety	3
Safe Operating Practices	3
Toro Mower Safety	4
Safety and Instruction Decals	5
Specifications	7
General Specifications	7
Optional Equipment	7
Setup	8
Loose Parts	8
Installing the Castor Wheel Assemblies	9
Installing the Lift Arms to the Traction Unit	9
Connecting the Lift Arms to the Cutting Unit	10
Connecting the PTO Shaft to the Cutting Unit Gear Box	11
Mounting the Counterbalance Manifold	11
Installing the Rear Weight	14
Before Operating	15
Checking the Lubricant in the Gear Box	15
Adjusting the Height-of-Cut	15
Adjusting the Rollers	16
Adjusting the Skids	16
Adjusting the Deck Baffles	17
Greasing the Cutting Unit	17
Operation	17
Operating Tips	17
Maintenance	19
Recommended Maintenance Schedule	19
Greasing the Bearings, Bushings, and Gear Box	19
Separating the Cutting Unit from the Traction Unit	20
Mounting the Cutting Unit to the Traction Unit	21
Replacing the Drive Belt	21
Servicing the Front Bushings in the Castor Arms	22
Servicing the Castor Wheels and Bearings	23
Removing the Cutting Blade	23
Inspecting and Sharpening the Blade	24
Correcting Cutting Unit Mismatch	25
Hydraulic Schematic	26
Troubleshooting	27
The Toro General Commercial Products Warranty	28

Introduction

Read this manual carefully to learn how to operate and maintain your product properly. The information in this manual can help you and others avoid injury and product damage. Although Toro designs and produces safe products, you are responsible for operating the product properly and safely.

You may contact Toro directly at www.Toro.com for product and accessory information, help finding a dealer, or to register your product.

Whenever you need service, genuine Toro parts, or additional information, contact an Authorized Service Dealer or Toro Customer Service and have the model and serial numbers of your product ready. The numbers are stamped into a plate located on the left rear hanger bracket of the mower.

Write the product model and serial numbers in the space below:

Model No. _____

Serial No. _____

This manual identifies potential hazards and has special safety messages that help you and others avoid personal injury and even death. ***Danger***, ***Warning***, and ***Caution*** are signal words used to identify the level of hazard. However, regardless of the hazard, be extremely careful.

Danger signals an extreme hazard that *will* cause serious injury or death if you do not follow the recommended precautions.

Warning signals a hazard that *may* cause serious injury or death if you do not follow the recommended precautions.

Caution signals a hazard that may cause minor or moderate injury if you do not follow the recommended precautions.

This manual uses two other words to highlight information. **Important** calls attention to special mechanical information and **Note:** emphasizes general information worthy of special attention.

© 2004 by The Toro Company

8111 Lyndale Avenue South
Bloomington, MN 55420-1196

Contact us at www.Toro.com
All Rights Reserved
Printed in the USA

Safety

This machine meets or exceeds CEN standard EN 836:1997, ISO standard 5395:1990, and ANSI B71.4-1999 specifications in effect at the time of production.

Improper use or maintenance by the operator or owner can result in injury. To reduce the potential for injury, comply with these safety instructions and always pay attention to the safety alert ⚠ symbol, which means CAUTION, WARNING, or DANGER—"personal safety instruction." Failure to comply with the instruction may result in personal injury or death.

Safe Operating Practices

The following instructions are from the CEN standard EN 836:1997, ISO standard 5395:1990, and ANSI B71.4-1999.

Training

- Read the Operator's Manual and other training material. If the operator(s) or mechanic(s) can not read English it is the owner's responsibility to explain this material to them.
- Become familiar with the safe operation of the equipment, operator controls, and safety signs.
- All operators and mechanics should be trained. The owner is responsible for training the users.
- Never let children or untrained people operate or service the equipment. Local regulations may restrict the age of the operator.
- The owner/user can prevent and is responsible for accidents or injuries occurring to himself or herself, other people or property.

Preparation

- Evaluate the terrain to determine what accessories and attachments are needed to properly and safely perform the job. Only use accessories and attachments approved by the manufacturer.
- Wear appropriate clothing including hard hat, safety glasses and ear protection. Long hair, loose clothing or jewelry may get tangled in moving parts.
- Inspect the area where the equipment is to be used and remove all objects such as rocks, toys and wire which can be thrown by the machine.
- Use extra care when handling gasoline and other fuels. They are flammable and vapors are explosive.
  - Use only an approved container.
  - Never remove fuel cap or add fuel with engine running. Allow engine to cool before refueling. Do not smoke.
  - Never refuel or drain the machine indoors.
- Check that operator's presence controls, safety switches and shields are attached and functioning properly. Do not operate unless they are functioning properly.

Operation

- Never run an engine in an enclosed area.
- Only operate in good light, keeping away from holes and hidden hazards.
- Be sure all drives are in neutral and parking brake is engaged before starting engine. Only start engine from the operator's position. Use seat belts if provided.
- Slow down and use extra care on hillsides. Be sure to travel in the recommended direction on hillsides. Turf conditions can affect the machine's stability. Use caution while operating near drop-offs.
- Slow down and use caution when making turns and when changing directions on slopes.
- Never raise deck with the blades running.
- Never operate with guards not securely in place. Be sure all interlocks are attached, adjusted properly, and functioning property.
- Do not change the engine governor setting or overspeed the engine.
- Stop on level ground, lower the cutting units, disengage drives, engage parking brake (if provided), shut off engine before leaving the operator's position for any reason.
- Stop equipment and inspect the blades after striking objects or if an abnormal vibration occurs. Make necessary repairs before resuming operations.
- Keep hands and feet away from the cutting units.
- Look behind and down before backing up to be sure of a clear path.
- Never carry passengers and keep pets and bystanders away.
- Slow down and use caution when making turns and crossing roads and sidewalks. Stop blades if not mowing.
- Do not operate the mower under the influence of alcohol or drugs.
- Use care when loading or unloading the machine into a trailer or truck.
- Use care when approaching blind corners, shrubs, trees, or other objects that may obscure vision.

- The operator shall turn on flashing warning lights, if provided, whenever traveling on a public road, except where such use is prohibited by law.

Maintenance and Storage

- Disengage drives, lower the cutting units, move traction pedal to Neutral, set parking brake, stop engine and remove key and disconnect spark plug wire. Wait for all movement to stop before adjusting, cleaning or repairing.
- Clean grass and debris from cutting units, drives, mufflers, and engine to help prevent fires. Clean up oil or fuel spillage.
- Let engine cool before storing and do not store near flame.
- Shut off fuel while storing or transporting. Do not store fuel near flames or drain indoors.
- Park machine on level ground. Never allow untrained personnel to service machine.
- Use jack stands to support components when required.
- Carefully release pressure from components with stored energy.
- Disconnect battery or remove spark plug wire before making any repairs. Disconnect the negative terminal first and the positive last. Reconnect positive first and negative last.
- Use care when checking blades. Wrap the blades or wear gloves, and use caution when servicing them. Only replace blades. Never straighten or weld them.
- Keep hands and feet away from moving parts. If possible, do not make adjustments with the engine running.
- Charge batteries in an open well ventilated area, away from spark and flames. Unplug charger before connecting or disconnecting from battery. Wear protective clothing and use insulated tools.
- Keep all parts in good working condition and all hardware tightened. Replace all worn or damaged decals.

Toro Mower Safety

The following list contains safety information specific to Toro products or other safety information that you must know that is not included in the ANSI standards.

This product is capable of amputating hands and feet and throwing objects. Always follow all safety instructions to avoid serious injury or death.

Use of this product for purposes other than its intended use could prove dangerous to user and bystanders.

Operation

- Know how to stop the machine and engine quickly.
- Always wear substantial shoes. Do not operate the machine while wearing sandals, tennis shoes, or sneakers.
- Wearing safety shoes and long pants is advisable and required by some local ordinances and insurance regulations.
- Fill fuel tank until level is 1 in. (25 mm) below the bottom of the filler neck. Do not overfill.
- Check the safety interlock switches daily for proper operation. If a switch should fail, replace the switch before operating the machine. After every two years, replace all three interlock switches in the safety system, **regardless** if they are working properly or not.
- Pay attention when using the machine. To prevent loss of control:
  - Do not drive close to sand traps, ditches, creeks, or other hazards.
  - Avoid sudden stops and starts.
  - Watch for traffic when near or crossing roads. Always yield the right-of-way.
  - Lower the cutting unit when going down slopes.
- If the cutting unit discharge area ever plugs, shut the engine off before removing the obstruction.
- Cut grass slopes carefully. Do not start, stop, or turn suddenly.
- Do not touch the engine or muffler while the engine is running or soon after it has stopped because these areas could be hot enough to cause burns.

Maintenance and Storage

- Check the blade mounting bolts frequently to be sure that they are tightened to specification.
- Make sure that all hydraulic line connectors are tight and all hydraulic hoses and lines are in good condition before applying pressure to the system.
- Keep your body and hands away from pin hole leaks or nozzles that eject hydraulic fluid under high pressure. Use paper or cardboard, not your hands, to search for leaks. Hydraulic fluid escaping under pressure can have sufficient force to penetrate the skin and cause serious injury.
- Before disconnecting or performing any work on the hydraulic system, all pressure in the system must be relieved by stopping the engine and lowering the cutting units to the ground.

- If the engine must be running to perform a maintenance adjustment, keep hands, feet, clothing, and any parts of the body away from the cutting units, attachments, and any moving parts. Keep everyone away.
- Do not overspeed the engine by changing governor settings. To ensure safety and accuracy, have an Authorized Toro Distributor check the maximum engine speed with a tachometer.
- The engine must be shut off before checking the oil or adding oil to the crankcase.
- Make sure that the mower fuel tank is empty if the machine is to be stored in excess of 30 days. Do not store the mower near any open flame or where gasoline fumes may be ignited by a spark.
- Perform only those maintenance instructions described in this manual. If major repairs are ever needed or if assistance is desired, contact an Authorized Toro Distributor.
- To make sure of optimum performance and continued safety certification of the machine, use only genuine Toro replacement parts and accessories. Replacement parts and accessories made by other manufacturers could be dangerous, and such use could void the product warranty.

Safety and Instruction Decals

Safety decals and instructions are easily visible to the operator and are located near any area of potential danger. Replace any decal that is damaged or lost.

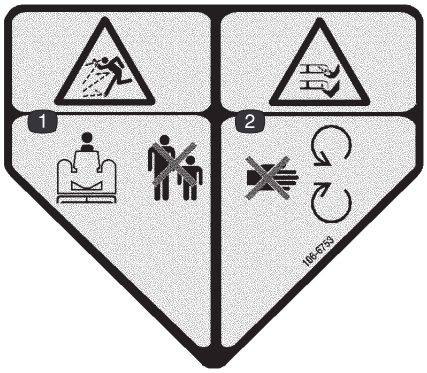

106-6753

1. Thrown object hazard—keep bystanders a safe distance from the machine.
2. Cutting/dismemberment hazard of hand or foot, mower blade—stay away from moving parts.

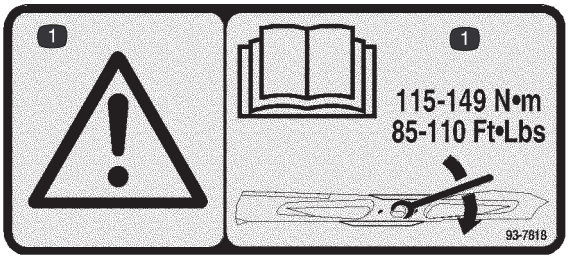

93-7818

1. Warning—read the *Operator's Manual* for instructions on torquing the blade bolt/nut to 115–149 N·m (85–110 ft.-lb.).

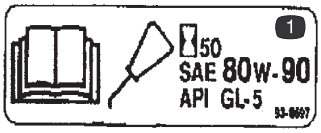

93-6697

1. Read the operator's manual for further information on lubrication.



107-2915

1. Entanglement hazard, shaft—keep bystanders a safe distance from the machine.

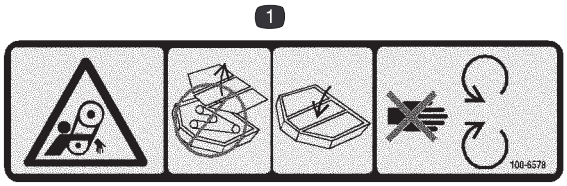

100-6578

1. Entanglement hazard, belt—do not operate the machine with the shields or guards removed; always keep the shields and guards in place. Stay away from moving parts.

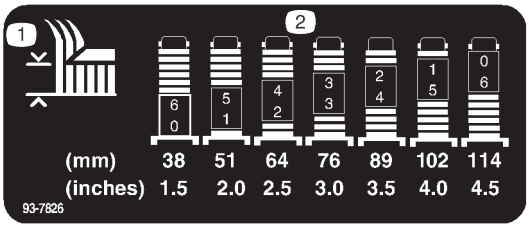

93-7826

1. Height of cut
2. Height settings

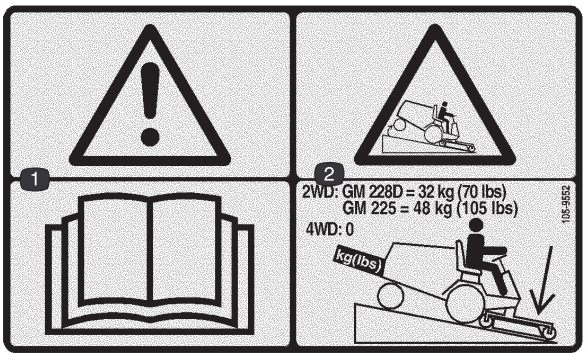

105-9552

1. Warning—read the *Operator's Manual.*
2. Tipping hazard—lower the cutting unit when driving down slopes. For 2 wheel drive units, add a 32 kg (70 lb.) rear weight to GM 228D units and a 48 kg (105 lb.) rear weight to GM 225 units. For 4 wheel drive units, do not add weight.

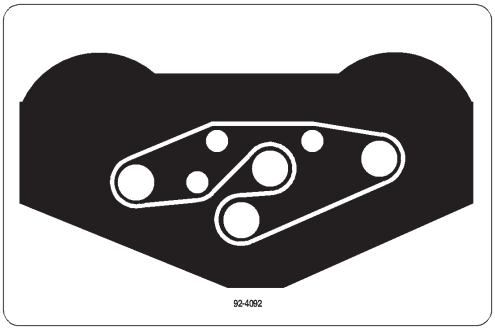

92-4092

Specifications

General Specifications

Width of Cut	62 in. (157 cm)
Height of Cut	Adjustable from 1-1/2 to 4-1/2 in. (38 to 114 mm) in 1/2 inch increments
Blade Tip Speed	15,480 ft./min. @ 3250 engine RPM
Cutter Housing	4 in. (102 mm) deep housing is made of 12 gauge steel and reinforced with 10 gauge channel and plates.
Cutting Unit Drive	Isolation mounted gear box on cutting unit is drive by PTO shaft. Power is transmitted to the blades by one hex “AA” section belt. Spindle shafts are 1 in. (25 mm) diameter and supported by 2 greaseable, tapered roller bearings.
Cutting Unit Blades	Three 21-3/4 in. (55.2 cm) long and 1/4 in. (6 mm) thick heat-treated, steel recycling blades
Castor Wheels	Front and rear castor wheels have 8 in. (203 mm) x 3-1/2 in. (89 mm) hard rubber tires and roller bearings.
Cutting Unit Lift	Independent lift arms and hydraulic weight transfer provide deck flotation.
Weight	340 lb. (154 kg)

Note: Specifications and design subject to change without notice.

Optional Equipment

Spindle Assembly	Part No. 95-3081
Blade and Belt Kit	Part No. 95-3073
Castor Wheel	Part No. 85-5760
Castor Wheel Set (set of 4 wheels)	Part No. 95-3076

Setup

Loose Parts

Note: Use this chart as a checklist to ensure that all parts have been received. Without these parts, total setup cannot be completed.

Description	Qty.	Use
Front castor wheel assembly	2	Installing the front castor wheel assemblies
Rear castor wheel assembly	2	Installing the rear castor wheel assemblies
Spacers	12	
Thrust washers	4	
Right-hand lift arm	1	Mount to the traction unit pivot brackets
Left-hand lift arm	1	
Pivot pin assembly	2	
Cotter pin, 5/32 x 1-3/4 in.	2	
Capscrew, 7/16 x 3 in.	4	Connecting the lift arms to the cutting unit
Flat washer, 7/16 in.	4	
Flange nut, 7/16 in.	4	
Tee fitting	1	Installing the manifold block
Straight fitting	1	
Elbow fitting	1	
Short hydraulic tube	1	
Long hydraulic tube	1	
Manifold block assembly	1	
Manifold bracket	1	
Flange head capscrew, 5/16 x 5/8 in.	4	
Locknut, 5/16 in.	2	
Spacer	2	
Flat washer	2	
Capscrew, 1/4 x 4 in.	2	
45° fitting	1	
Straight fitting	1	
Hydraulic hose	1	
Hose clamp	2	
Hydraulic hose	1	
Hose clamp	2	
Parts catalog	1	
Certificate of Conformance	1	
Operator’s Manual	1	Read before operating the machine.

Danger

If the engine is started and the PTO shaft is allowed to rotate, serious injury could result.

Do not start the engine and engage the PTO lever when the PTO shaft is not connected to the gear box on the cutting unit.

Installing the Castor Wheel Assemblies

The thrust washers, spacers, and tensioning caps have been installed on the castor wheel spindles for shipping. The thrust washers and spacers included in the loose parts are for the rear castor wheel assemblies.

1. Remove the tensioning caps from the spindle shafts and slide off the spacers and thrust washers (Fig. 1 and 2).

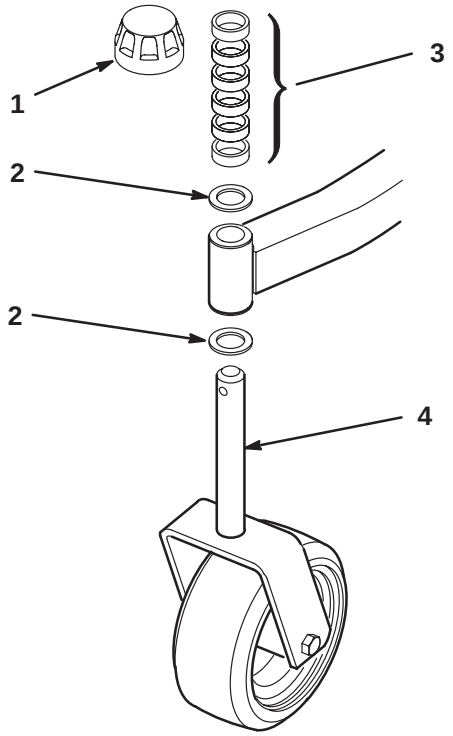

Figure 1

1. Tensioning cap
2. Thrust washers
3. Spacers
4. Front castor spindle

2. Slide the spacers onto the castor spindle to get the desired height-of-cut; refer to the Height-of-Cut Chart on page 15. Slide a thrust washer onto the spindle, push the round castor spindle through the front castor arm, and the hex castor spindle through the rear castor arm. Install another thrust washer and the remaining spacers onto the spindle and install the tensioning cap to secure the assembly.

Important The thrust washers, not the spacers, must contact the top and bottom of the castor arm.

Note: Determine the left and right sides of the machine from the normal operating position.

3. Ensure that all four castor wheels are set at the same height-of-cut and roll the cutting unit off of the pallet.

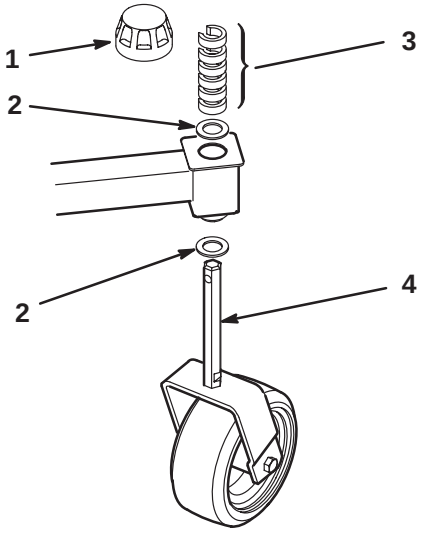

Figure 2

1. Tensioning cap
2. Thrust washers
3. Spacers
4. Rear castor spindle

Installing the Lift Arms to the Traction Unit

1. On one side of the traction unit, loosen (do not remove) the wheel nuts securing the wheel and tire assembly to the front wheel studs.
2. Jack up the machine until the front wheel is off of the floor. Use jack stands or block the machine to prevent it from accidentally falling.
3. Remove the wheel nuts and slide the wheel and tire assembly off of the studs.
4. Mount a lift arm to the pivot bracket with a pivot pin and cotter pin (5/32 x 1-3/4 in.) (Fig. 3). Mount the lift arm with the ball joint end positioned outward.

5. Mount the rear of the lift arm to the lift cylinder with a pivot pin and 2 cotter pins (supplied with the traction unit).

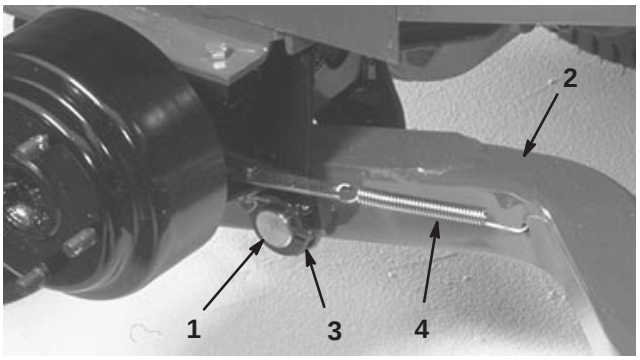

Figure 3

1. Pivot pin
2. Lift arm
3. Lift arm pivot bracket
4. Brake return spring

6. Hook the brake return spring to the hole in the lift arm (Fig. 3).
7. Install the wheel and tire assembly. Torque the wheel nuts to 45–55 ft.-lb. (61–75 N·m).
8. Repeat the procedure on the opposite side of the machine.

Connecting the Lift Arms to the Cutting Unit

1. Move the cutting unit into position in front of the traction unit.
2. Measure the distance from the end of each lift arm to the center of the ball joint (grease fitting). The distance should be 2 in. (51 mm) (Fig. 4). If distance is not 2 in. (51 mm), loosen the jam nut securing the ball joint to the lift arm and rotate the ball joint in or out until the distance is attained. Do not tighten the jam nuts at this time.

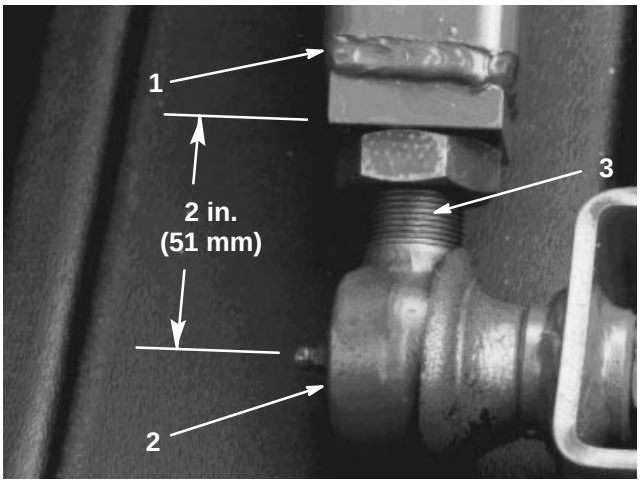

Figure 4

1. Lift arm
2. Ball joint
3. Jam nut

3. Move the lift lever to the Float position. Push the lift arms down until the holes in the ball joint mounts line up with the holes in the castor arms.
4. Secure the ball joint mounts to each castor arm with 2 capscrews (7/16 x 3 in.), flat washers (7/16 in.), and flange nuts (7/16 in.). Position the flat washers to the outside of the castor arm (Fig. 5).

Note: The ball joint mount should be above the castor arm when it is assembled.

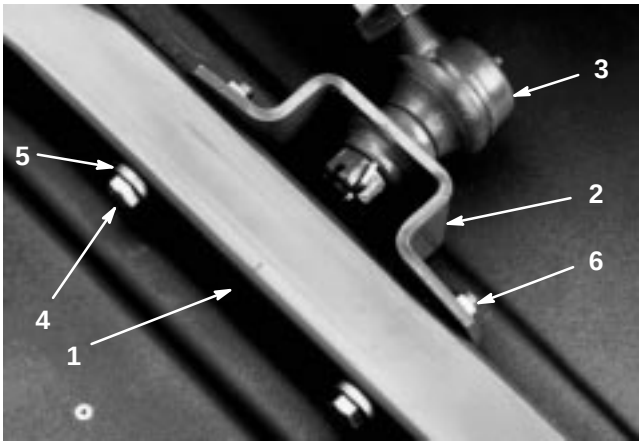

Figure 5

1. Castor arm
2. Ball joint mount
3. Ball joint
4. Capscrew
5. Washer
6. Flange nut

5. Tighten the large jam nut securing the ball joint to the lift arm (Fig. 5). When tightening the jam nut, hold the ball joint straight to permit proper oscillation during raising and lowering of the cutting unit.

Connecting the PTO Shaft to the Cutting Unit Gear Box

1. Remove the 2 capscrews and lock washers securing the PTO guard mounting brackets to the gearbox (Fig. 6). Retain the fasteners for future installation.
2. Slide the PTO shaft guard onto the PTO shaft, positioning the guard as shown in Figure 6.

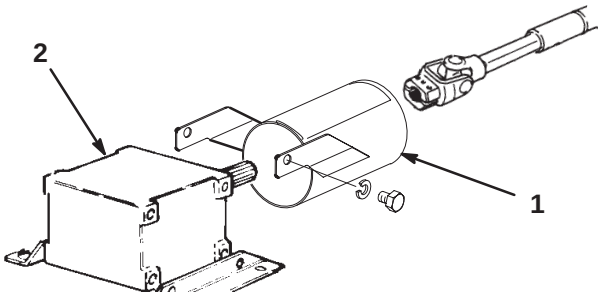

Figure 6

1. PTO guard
2. Gear box

3. Slide the male PTO shaft into the female PTO shaft. Align the mounting holes in the gear case input shaft with the holes in the PTO shaft and slide them together.

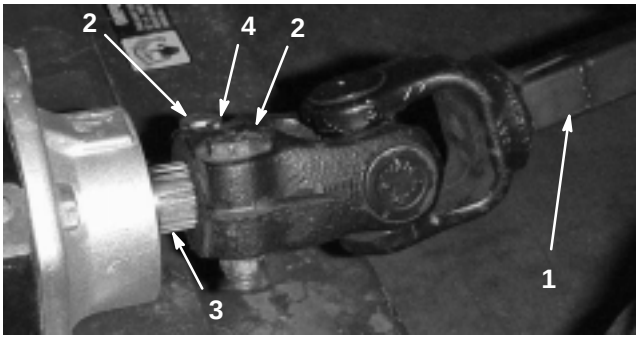

Figure 7

1. PTO shaft
2. Bolts and locknuts
3. Gearcase input shaft
4. Roll pin

4. Secure them with a roll pin.
5. Tighten the capscrews and nuts.
6. Attach the PTO shaft guard to the gearbox with the 2 capscrews and lock washers previously removed.

Mounting the Counterbalance Manifold

1. Place a drain pan under the lift valve on the right side of the machine.
2. Move the lift lever to the Float position. Make sure that the cutting unit is lowered all of the way to the floor.
3. Remove the hose clamps securing the hoses to the three-way fitting at the rear of the lift valve. Remove the hoses.
4. Loosen the 2 capscrews securing the lift valve to the frame channel (Fig. 8).

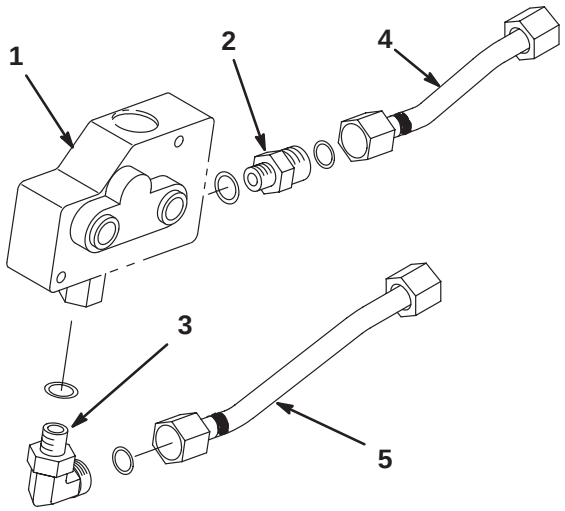

Figure 8

1. Lift valve
2. Straight fitting
3. Elbow fitting
4. Short hydraulic tube
5. Long hydraulic tube

5. Remove the three-way fitting and o-ring from the rear of the lift valve.

Important Before instaling any hydraulic fittings, make sure that the o-rings are lubricated with hydraulic oil and positioned correctly.

6. Install a new straight fitting and o-ring into the rear of the lift valve (Fig. 8).
7. For the Groundsmaster 200 series only, disconnect the return line from the bottom of the lift valve (the line that goes to the radiator). Remove the elbow fitting from the lift valve.
8. For the Groundsmaster 1000L only, disconnect the return line from the bottom of the lift valve (the line that goes to the oil cooler). Remove the barb fitting from the lift valve.
9. Install a new elbow fitting and o-ring into the bottom of the lift valve (Fig. 8).

10. Loosely install the short hydraulic tube to the straight fitting on the rear of the lift valve (Fig. 8).

Note: The ends of hydraulic tubes with the tape on them are to be installed to the lift valve fittings.

11. Loosely install the long hydraulic tube to the elbow fitting on the bottom of the lift valve (Fig. 8).

12. Mount the manifold block assembly to the manifold bracket with 2 flange head capscrews (5/16 x 5/8 in.) (Fig. 9). Torque the screws to 145–190 in.-lb. (16–21 N·m).

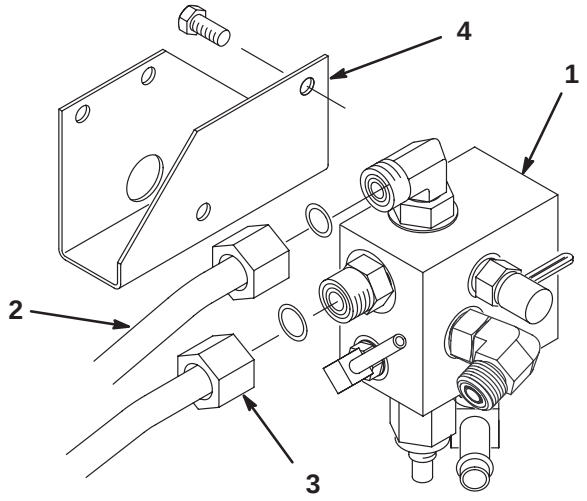

Figure 9

1. Manifold block
2. Short hydraulic tube
3. Long hydraulic tube
4. Manifold bracket

13. Loosely install the other end of the short hydraulic tube to the elbow fitting on top of the manifold block (Fig. 9).

14. Loosely install the other end of the long hydraulic tube to the straight fitting on the front of the manifold block (Fig. 9).

15. Using the lower set of holes in the right side frame member, mount the manifold bracket with 2 flange head capscrews (5/16 x 5/8 in.) and locknuts (Fig. 10).

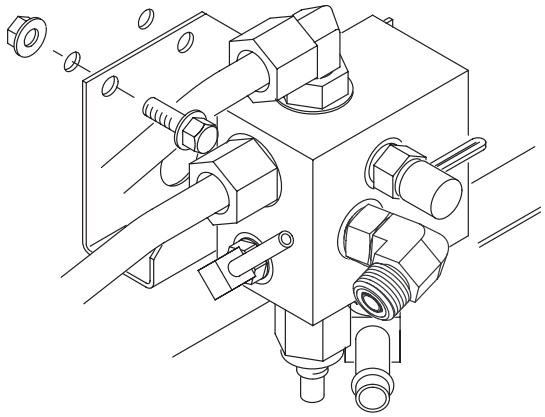

Figure 10

16. Tighten the fittings securing both ends of the hydraulic tubes to the lift valve and manifold block.

17. Tighten the capscrews securing the lift valve to the frame channel.

18. Mount the hoses to the new tee fitting with the hose clamps removed, as shown in Figure 11.

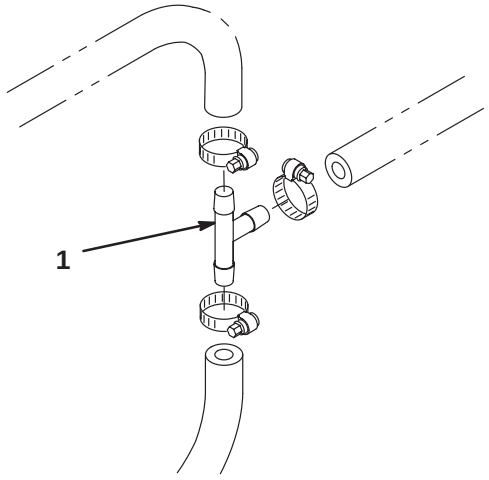

Figure 11

1. Tee fitting

19. For the Groundsmaster 200 series only, route the hydraulic hose, previously removed from the elbow fitting on the bottom of the lift valve, to the rear of the right front engine mount and connect it to the OUT port elbow fitting on the side of the manifold block (Fig. 12).

Note: For the Groundsmaster 223. the OUT port elbow fitting on the side of the manifold block must be rotated 180°.

20. For the Groundsmaster 1000L series only, remove the relief valve from the G1 port and the 90° fitting from the OUT port on the side of the manifold block. Install the relief valve in the G1 port and install the barb fitting, removed from the bottom of the lift valve, in the OUT port of the manifold block.

21. For the Groundsmaster 1000L series only, cut off 11-1/2 in. (29.2 cm) of the hose, previously removed from the barb fitting on the bottom of the lift valve, and attach it to the barb fitting in the OUT port of the manifold block. Secure it with a hose clamp.

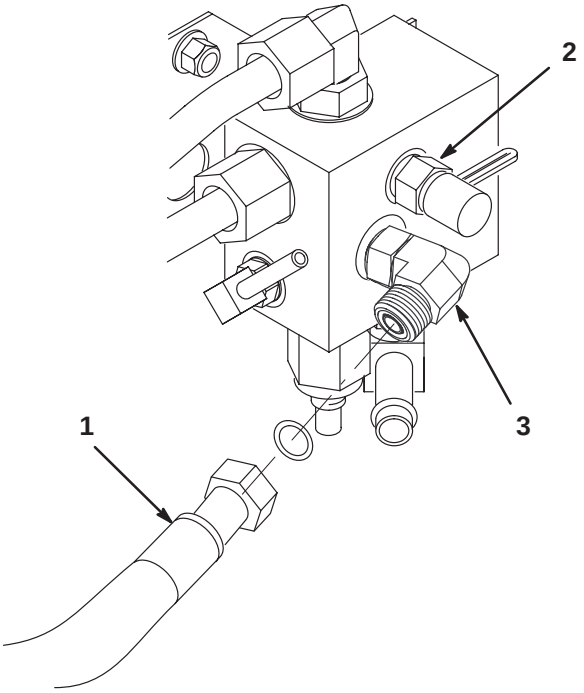

Figure 12

1. Hydraulic hose
2. Straight fitting
3. 90° fitting

22. Place a drain pan under the rear of the transmission.

Note: On traction units equipped with an oil filter adapter on the rear of the transmission, use steps 23–27. Other machines use steps 28–33.

23. Remove the large and small plug from the right side of the transmission oil filter adapter.

24. Install a 45° fitting into the transmission oil filter adapter. Position the fitting so that the opening points toward the manifold block (Fig. 13).

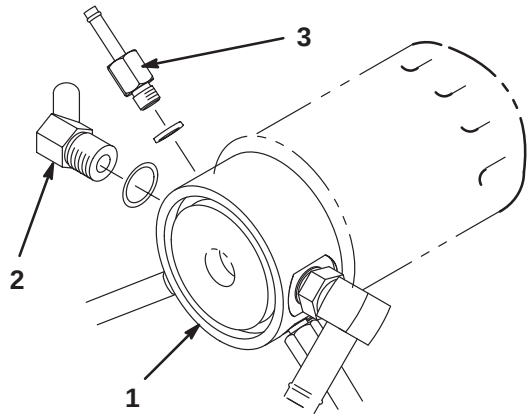

Figure 13

1. Transmission oil filter adapter
2. 45° fitting
3. Straight fitting

25. Install a straight fitting into the transmission oil filter adapter (Fig. 13).

26. Install the hydraulic hose to the 90° fitting on the front of the manifold block and the straight fitting on the oil filter adapter with 2 hose clamps.

27. Cut the remaining hydraulic hose to a length of 8-3/4 in. (22.2 cm). Install the hose to the 90° fitting on the bottom of the manifold block and the 45° fitting on the oil filter adapter with 2 hose clamps.

28. Disconnect the left and right lift cylinder hoses and return hose from the cross fitting on the bottom of the transmission (Fig. 14).

Note: Steps 29–31 are not required on machines with serial numbers greater than 30001.

29. Remove the cross fitting from the transmission (Fig. 14).

Note: A special new cross fitting, Part No. 92-5640, is not included in the loose parts. It must be purchased from your Authorized Toro Distributor.

30. Install the new special fitting (Part No. 92-5640) into the bottom of the transmission (Fig. 15). Position the fitting so that the side with the two openings points toward the right side of the machine.

31. Install the lift cylinder hoses and return hose to the new cross fitting. Position the hoses as shown in Figure 15.

32. Install the hydraulic hose to the 90° fitting on the front of the manifold block and the remaining opening on the side of the cross fitting with 2 hose clamps. Reposition the 90° fitting, as required, for the hose connection.

33. Install the remaining hose to the 90° fitting on the bottom of the manifold block and the remaining opening on the cross fitting with 2 hose clamps. Reposition the 90° fitting, as required, for the hose connection.

34. Replenish the oil in the transmission, as required.

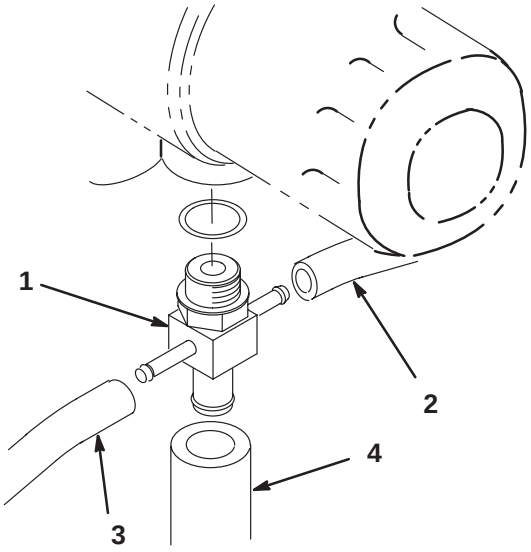

Figure 14

1. Cross fitting
2. Right lift cylinder hose
3. Left lift cylinder hose
4. Return hose

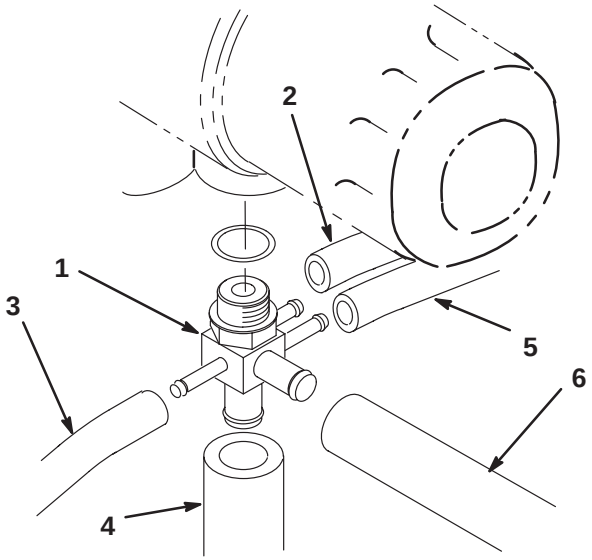

Figure 15

1. Cross fitting (92-5640)
2. Right lift cylinder hose
3. Left lift cylinder hose
4. Return hose
5. Hose to manifold block
6. Hose to manifold block

Note: The test port is used to check the hydraulic circuit pressure. Check the pressure with the lift lever in the Float position, the engine running at high idle, and the hydraulic oil at its normal operating temperature (Fig. 16). Contact your local Toro distributor for assistance.

Normal counterbalance setting is 100 psi (689 kPa).

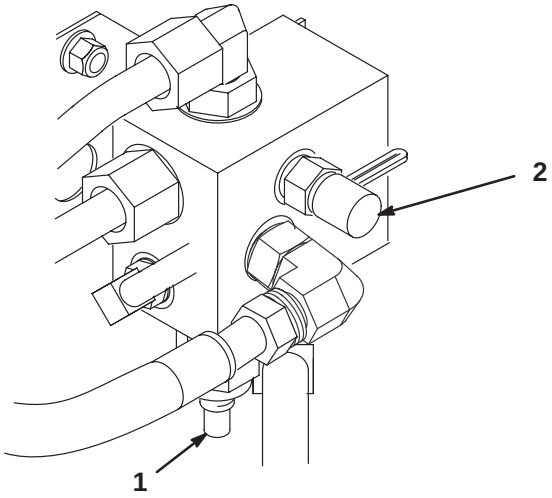

Figure 16

1. Adjusting screw
2. Test port

Note: The counterbalance has been preset at the factory and should not require adjusting. Rotating the manifold screw to increase or decrease pressure will increase or decrease the counterbalance (Fig. 16).

Installing the Rear Weight

Two Wheel Drive Groundsmaster 1000 and 200 Series traction units comply with the ANSI B71.4-1999 Standard when equipped with rear weight. Refer to the chart in the traction unit Operator's Manual to determine the combinations of weight required. Order the parts from your local Authorized Toro Distributor.

Four Wheel Drive Groundsmaster 200 Series traction units do not need additional rear weight to comply with the ANSI B71.4-1999 Standard.

Before Operating

Checking the Lubricant in the Gear Box

The gear box in designed to operate on SAE 80–90 wt. gear lube. Although the gear box is shipped with lubricant from the factory, check the level before operating the cutting unit.

1. Position the machine and cutting unit on a level surface.
2. Remove the dipstick/fill plug from the top of the gear box (Fig. 17) and make sure that the lubricant is between the marks on the dipstick. If the lubricant level is low, add enough lubricant until the level is between the marks.

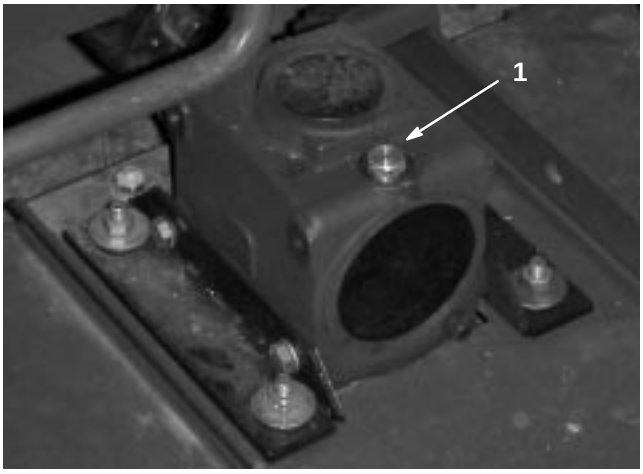

Figure 17

1. Dipstick/fill plug

Adjusting the Height-of-Cut

The height-of-cut is adjustable from 1-1/2 to 4-1/2 inches (38 to 114 mm) in 1/2 inch (13 mm) increments, by adding or removing an equal number of spacers on the front and rear castor forks. The following height-of-cut chart gives the combinations of spacers to use for all height-of-cut settings.

Height-of-Cut Setting (inches)	Spacers Below Castor Arm	
	Front	Rear
1-1/2 (38 mm)	0	0
2 (51 mm)	1	1
2-1/2 (64 mm)	2	2
3 (76 mm)	3	3
3-1/2 (89 mm)	4	4
4 (102 mm)	5	5
4-1/2 (114 mm)	6	6

Start the engine and raise the cutting unit so that the height-of-cut can be changed. Stop the engine after the cutting unit is raised.

Note: 1 in. (25 mm) height-of-cut can be attained by modifying the castor forks as follows:

1. Remove the front and rear castor forks from the cutting deck and remove the wheels from the forks.
2. Drill out the 7/16 in. diameter holes (Fig. 18 and 19) in each side of the castor forks to 1/2 in. or 33/64 in. diameter.
3. Using the new holes, install the castor wheels on the forks and install the forks to the deck.

Note: The height-of-cut decal will now be off by 1/2 in. (13 mm) for spacer placement and the height-of-cut will be 1 to 4 in. (25 to 102 mm).

Front Castor Wheels

1. Remove the tensioning cap from the spindle shaft and slide the spindle out of the front castor arm (Fig. 18). Remove the washer from the spindle shaft. Slide the spacers onto the spindle shaft to get the desired height-of-cut, then slide the washer onto the shaft.

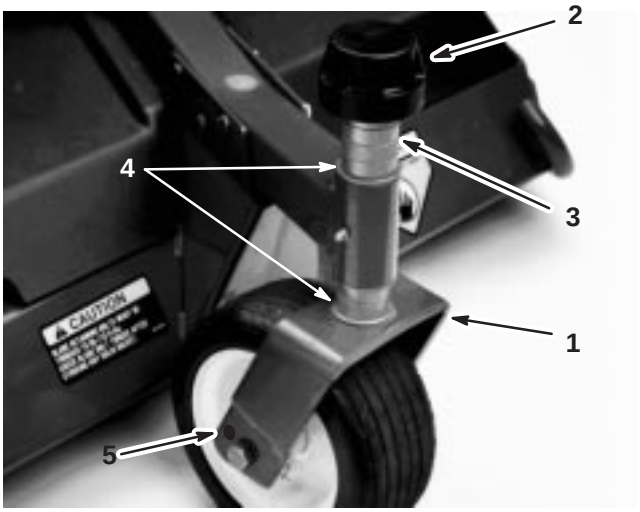

Figure 18

1. Front castor wheel
2. Tensioning cap
3. Spacers
4. Thrust washers
5. 7/16 in. diameter hole

2. Push the castor spindle through the front castor arm, install the other thrust washer and remaining spacers onto the spindle, and install the tensioning cap to secure the assembly.

Rear Castor Wheels

1. Remove the tensioning cap from the spindle shaft (Fig. 19).

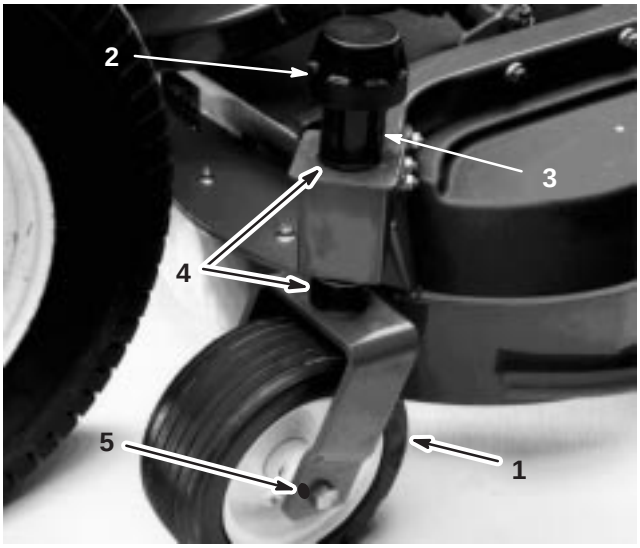

Figure 19

1. Rear castor wheel
2. Tensioning cap
3. Spacers
4. Thrust washers
5. 7/16 in. diameter hole

Note: The rear castor fork assembly does not need to be removed from the castor arm to change the height-of-cut.

2. Remove or add ”C” shaped spacers at the narrow portion of the spindle shaft, below the castor arm, to get the desired height-of-cut. Make sure that the thrust washers, not the spacers, contact the top and bottom of the castor arm.

3. Install the tensioning cap to secure the assembly.

4. Ensure that all four castor wheels are set at the same height-of-cut.

Adjusting the Rollers

Note: If the cutting unit is to be used in the 1 or 1-1/2 in. (25 or 38 mm) height-of-cut setting, the cutting unit rollers must be repositioned in the top bracket holes.

1. Remove the cotter pins securing the roller shafts to the underside of the deck.

2. Slide the shafts out of the lower bracket holes, align the rollers with the top holes, and install the shafts.

3. Install the cotter pins to secure the assemblies.

Adjusting the Skids

Adjust the skids by removing the flange nuts, positioning the skids at the desired position, and installing the flange nuts (Fig. 20).

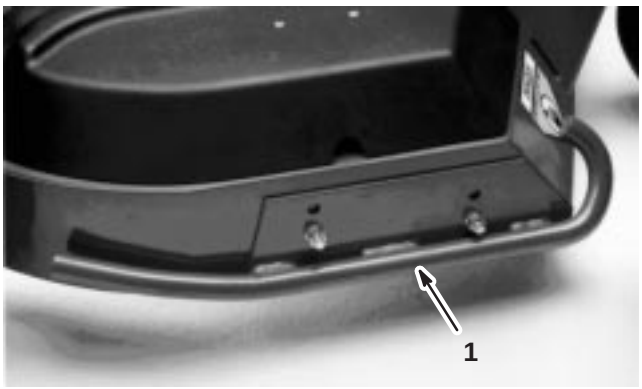

Figure 20

1. Skid

Adjusting the Deck Baffles

1. Loosen the fasteners securing the front and side baffles to deck straps (Fig. 21).

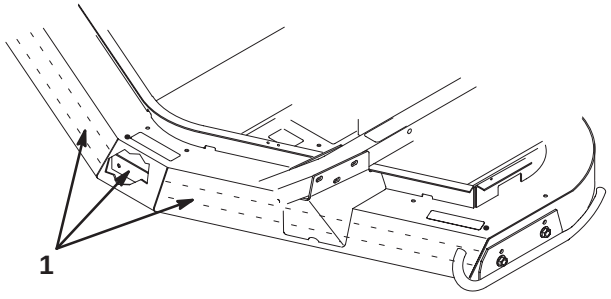

Figure 21

1. Baffles

2. Adjust the baffles to the desired height and tighten the mounting fasteners.

Note: Make sure that the baffles are level and not bent. A bent baffle could affect the quality of cut.

Greasing the Cutting Unit

Before the cutting unit is operated, it must be greased to ensure proper lubricating characteristics; refer to Greasing the Bearings, Bushings, and Gear Box, page 19. Failure to properly grease the cutting unit will result in premature failure of critical parts.

Operation

The use of protective equipment, such as but not limited to, for eyes, ears, feet, and head is recommended.

Caution

This machine produces sound levels in excess of 85 dBA at the operator's ear and can cause hearing loss through extended periods of exposure.

Wear hearing protection when operating this machine.

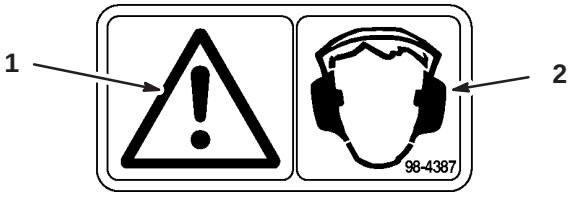

Figure 22

1. Caution
2. Wear hearing protection

Operating Tips

Mow When Grass is Dry

Mow either in the late morning to avoid the dew, which causes grass clumping, or in late afternoon to avoid the damage that can be caused by direct sunlight on the sensitive, freshly mowed grass.

Select the Proper Height-of-Cut Setting to Suit Conditions

Remove approximately 1 inch (25 mm) or no more than 1/3 of the grass blade when cutting. In exceptionally lush and dense grass you may have to raise your height-of-cut setting another notch.

Mowing in Extreme Conditions

Air is required to cut and recut grass clippings in the mower housing, so do not set the height-of-cut too low or totally surround the housing by uncut grass. Always try to have one side of the mower housing free from uncut grass, allowing air to be drawn into the housing. When making an initial cut through the center of an uncut area, operate the machine slower and back up if the mower starts to clog.

Mow at Proper Intervals

Under most normal conditions you will need to mow approximately every 4–5 days. But remember, grass grows at different rates at different times. This means that in order to maintain the same height-of-cut, which is a good practice, you will need to cut more frequently in early spring; as the grass growth rate slows in mid summer, cut only every 8–10 days. If you are unable to mow for an extended period due to weather conditions or other reasons, mow first with the height-of-cut at a high level; then mow again 2–3 days later with a lower height setting.

Always Mow with Sharp Blades

A sharp blade cuts cleanly and without tearing or shredding the grass blades like a dull blade. Tearing and shredding causes the grass to turn brown at the edges which impairs growth and increases susceptibility to diseases.

Stopping

If the machine has to be stopped while cutting, a clump of grass clippings may be deposited on the lawn. Follow this procedure for stopping while cutting:

1. With the deck engaged, move onto a previously cut area.
2. Shift to neutral, move the throttle control lever to the Slow position, and rotate the ignition key to Off.

After Operating

To ensure optimum performance, clean the underside of the mower housing, especially around the inserts (kickers), after each use. If residue is allowed to build up in the mower housing and on the inserts, cutting performance will decrease.

Maintenance

Recommended Maintenance Schedule

Maintenance Service Interval	Maintenance Procedure
After first 2 hours	• Tighten the castor wheel nuts.
After first 10 hours	• Tighten the castor wheel nuts. • Torque the blade bolts.
Daily	• Check the blades. • Lubricate the castor arm bushings. • Lubricate the castor wheel bearings.
Every 50 hours	• Tighten the castor wheel nuts. • Torque the blade bolts. • Lubricate the grease fittings. • Clean under the cutting unit belt covers. • Check the blade drive belt adjustment. • Check the gear box oil level.
Every 400 hours	• Change the gear box oil.

Note: Determine the left and right sides of the machine from the normal operating position.

Caution

If you leave the key in the ignition switch, someone could accidentally start the engine and seriously injure you or other bystanders.

Remove the key from the ignition switch before you do any maintenance.

Greasing the Bearings, Bushings, and Gear Box

The cutting unit must be lubricated regularly. If the machine is operated under normal conditions, lubricate the castor bearings and bushings with No. 2 general purpose lithium base grease or molybdenum base grease after every 8 hours of operation or daily, whichever comes first.

1. Lubricate the following areas:

- front castor spindle bushings (Fig. 23)
- rear castor spindle shaft (remove shaft from castor arm and coat the hexagonal shaft with designated grease every 50 hours) (Fig. 24)
- castor wheel bearings (Fig. 23 and 24)
- blade spindle bearings (Fig. 25)
- right and left push arm ball joints (Fig. 25)



Figure 23



Figure 24



Figure 25

2. Position the machine and cutting unit on a level surface and lower the cutting unit. Remove the dipstick/fill plug from the top of the gear box (Fig. 26) and make sure that the lubricant is between the marks on the dipstick. If the lubricant level is low, add SAE 80–90 wt. gear lube until the level is between the marks.

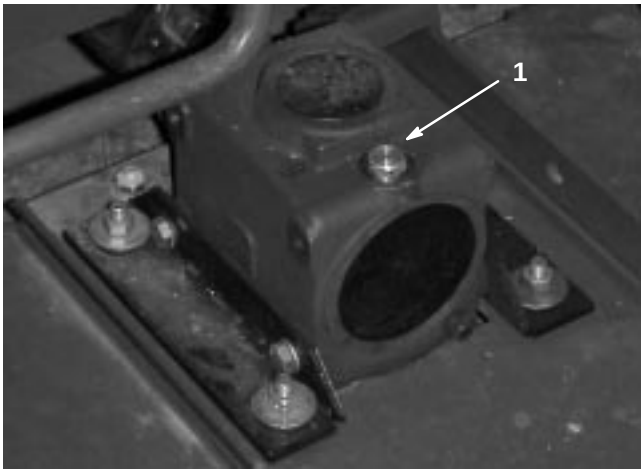

Figure 26

1. Fill/check plug

Separating the Cutting Unit from the Traction Unit

1. Position the machine on level surface, lower the cutting unit to the floor, move the lift lever to the Float position, shut the engine off, and engage the parking brake.

2. Remove the capscrews, flat washers, and locknuts securing the ball joint mounts to the castor arms on the cutting unit (Fig. 27).

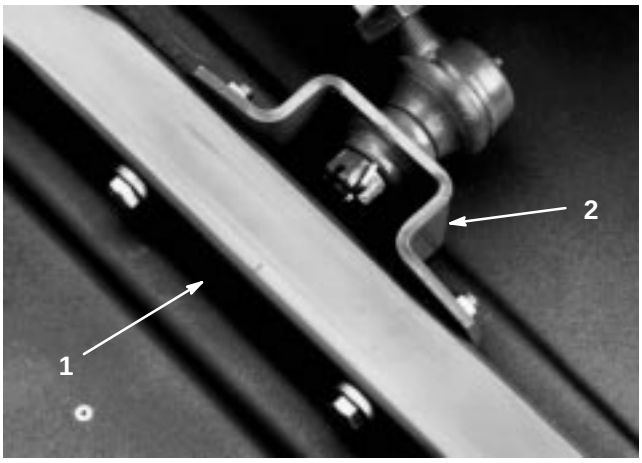

Figure 27

1. Castor arm
2. Ball joint mount

3. Roll the cutting unit away from the traction unit, separating the male and female sections of the PTO shaft (Fig. 28).



Figure 28

1. PTO shaft

Danger

If the engine is started and the PTO shaft is allowed to rotate, serious injury could result.

Do not start the engine and engage the PTO lever when the PTO shaft is not connected to the gear box on the cutting unit.

Mounting the Cutting Unit to the Traction Unit

1. Position the machine on a level surface and shut the engine off.
2. Move the cutting unit into position in front of the traction unit.
3. Slide the male PTO shaft into the female PTO shaft (Fig. 28).
4. Move the lift lever to the Float position. Push the lift arms down until the holes in the ball joint mounts line up with the holes in the castor arms (Fig. 27).
5. Secure the ball joint mounts to the castor arms with the capscrews, flat washers, and flange nuts. Position the flat washers to the outside of the castor arm (Fig. 27).

Replacing the Drive Belt

The blade drive belt, tensioned by the stationary idler pulley, is very durable. However, after many hours of use, the belt will show signs of wear. Signs of a worn belt are: squealing when the belt is rotating, blades slipping when cutting grass, frayed edges, burn marks, and cracks. Replace the belt if any of these conditions are evident.

1. Lower the cutting unit to the shop floor. Remove the belt covers from the top of the cutting unit and set them aside.
2. Loosen the flange nut securing the idler pulley to the deck (Fig. 29). Move the pulley away from the belt to release the belt tension.



Figure 29

1. Idler pulley

3. Remove the carriage bolts and flange nuts securing the gear box plate to the deck. Lift the gear box plate and gear box off of the deck and lay it on top of the deck.

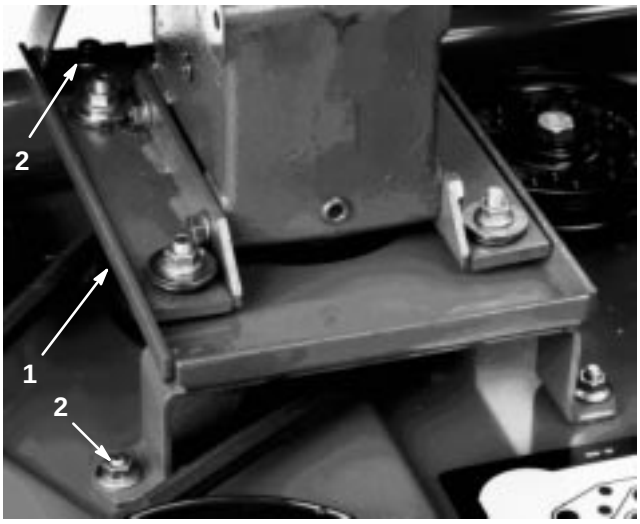

Figure 30

1. Gear box plate 2. Capscrews and nuts

4. Remove the old belt from around the spindle pulleys and idler pulley.

5. Route the new belt around the spindle pulleys and idler pulley assembly, as shown in Figure 31.

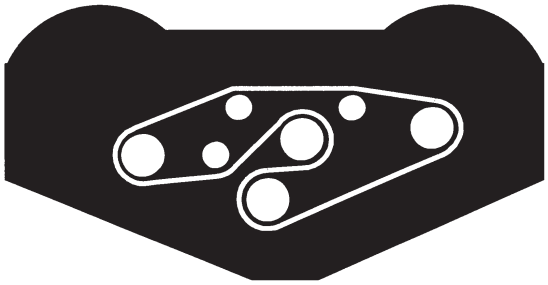

Figure 31

6. Reposition the gear box plate on the deck while routing the belt around the gear box pulley. Mount the gear box plate to the deck with the carriage bolts and flange nuts previously removed.

7. Using approximately 50 lb. (222 N) of force, slide the idler pulley against the belt (Fig. 29).

8. Hold the pulley in position and tighten the nut.

9. Install the belt covers.

Servicing the Front Bushings in the Castor Arms

The castor arms have bushings pressed into the top and bottom of the tube, and after many hours of operation, the bushings will wear. To check the bushings, move the castor fork back and forth and from side to side. If the castor spindle is loose inside the bushings, the bushings are worn and must be replaced.

1. Raise the cutting unit so that the wheels are off of the floor and block it so that it cannot accidentally fall.

2. Remove the tensioning cap, spacer(s), and thrust washer from the top of the castor spindle.

3. Pull the castor spindle out of the mounting tube. Allow the thrust washer and spacer(s) to remain on the bottom of the spindle.

4. Insert a pin punch into the top or bottom of the mounting tube and drive the bushing out of the tube. Also drive the other bushing out of the tube (Fig. 32). Clean the inside of the tubes to remove dirt.

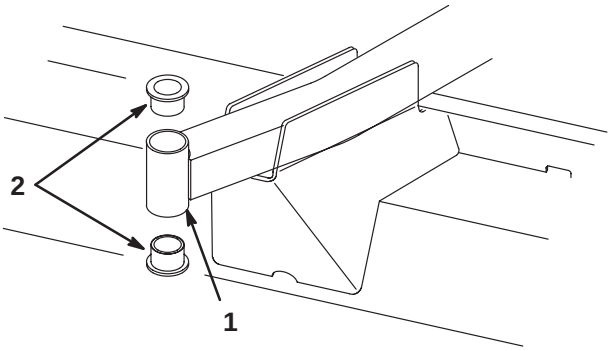

Figure 32

1. Front castor arm tube 2. Bushings

5. Apply grease to the inside and outside of the new bushings. Using a hammer and flat plate, drive the bushings into the mounting tube.

6. Inspect the castor spindle for wear and replace it if it is damaged.

7. Push the castor spindle through the bushings and mounting tube. Slide the thrust washer and spacer(s) onto the spindle. Install the tensioning cap on the castor spindle to retain all of the parts in place.

Servicing the Castor Wheels and Bearings

The castor wheel rotates on a high-quality roller bearing and is supported by a spanner bushing. Even after many hours of use, provided that the bearing was kept well lubricated, bearing wear will be minimal. However, failure to keep the bearing lubricated will cause rapid wear. A wobbly castor wheel usually indicates a worn bearing.

1. Remove the locknut from the capscrew holding the castor wheel assembly between the castor fork (Fig. 33). Grasp the castor wheel and slide the capscrew out of the fork.
2. Pull the spanner bushing out of the wheel hub (Fig. 33).
3. Remove the bushing from the wheel hub and allow the bearing to fall out. Remove the bushing from the opposite side of the wheel hub.
4. Check the bearing, spanner, and inside of the wheel hub for wear. Replace damaged parts.
5. To assemble the castor wheel, push the bushing into the wheel hub. Slide the bearing into the wheel hub. Push the other bushing into the open end of the wheel hub to captivate the bearing inside the wheel hub (Fig. 33).
6. Carefully slide the spanner through the bushings and the wheel hub.
7. Install the castor wheel assembly between the castor fork and secure it in place with the capscrew, washers, and locknut.
8. Lubricate the castor wheel bearing through the grease fitting, using No. 2 general purpose lithium base grease.

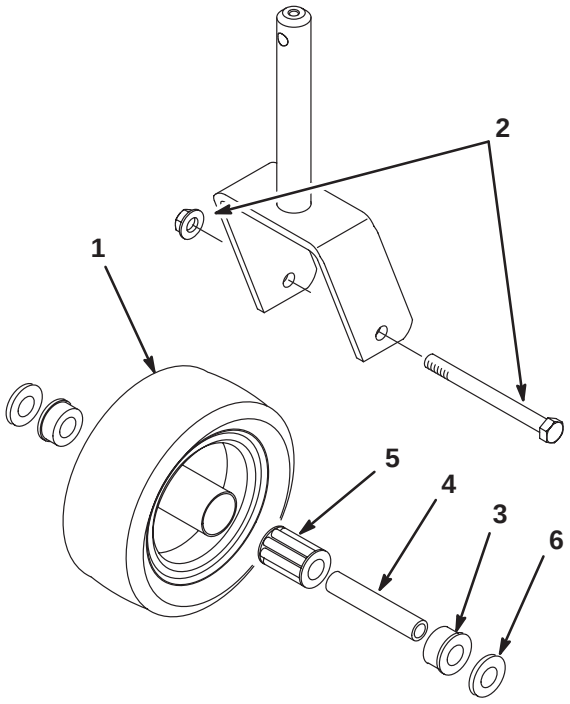

Figure 33

1. Castor wheel
2. Capscrew and locknut
3. Bushing (2)
4. Spanner bushing
5. Roller bearing
6. Washer (2)

Removing the Cutting Blade

The blade must be replaced if a solid object is hit, or the blade is out-of-balance, worn, or bent. Always use genuine Toro replacement blades to ensure safety and optimum performance. Never use blades made by other manufacturers because they could be dangerous.

1. Raise the cutting unit to the highest position, shut the engine off, and engage the parking brake. Block the cutting unit to prevent it from accidentally falling.
2. Grasp the end of the blade using a rag or thickly padded glove. Remove the blade bolt, anti-scalp cup, and blade from the spindle shaft (Fig. 34).

Danger

A worn or damaged blade can break, and a piece of the blade could be thrown into the operator's or bystander's area, resulting in serious personal injury or death.

- **Inspect the blade periodically for wear or damage.**
- **Do not try to straighten a blade that is bent.**
- **Never weld a broken or cracked blade.**
- **Replace a worn or damaged blade with a new Toro blade to ensure continued safety certification of the product.**

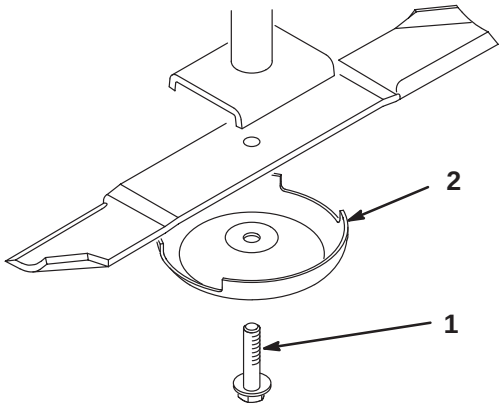

Figure 34

1. Blade bolt
2. Anti-scalp cup

3. Install the blade—sail facing toward the cutting unit—with the anti-scalp cup and blade bolt. Tighten the blade bolt to 85–110 ft.-lb. (115–149 N·m).

Inspecting and Sharpening the Blade

1. Raise the cutting unit to the highest position, shut the engine off, and engage the parking brake. Block the cutting unit to prevent it from accidentally falling.

2. Examine the cutting ends of the blade carefully, especially where the flat and curved parts of the blade meet (Fig. 35-A). Since sand and abrasive material can wear away the metal that connects the flat and curved parts of the blade, check the blade before using the machine. If wear is noticed (Fig. 35-B), replace the blade; refer to Removing the Cutting Blade, page 23.

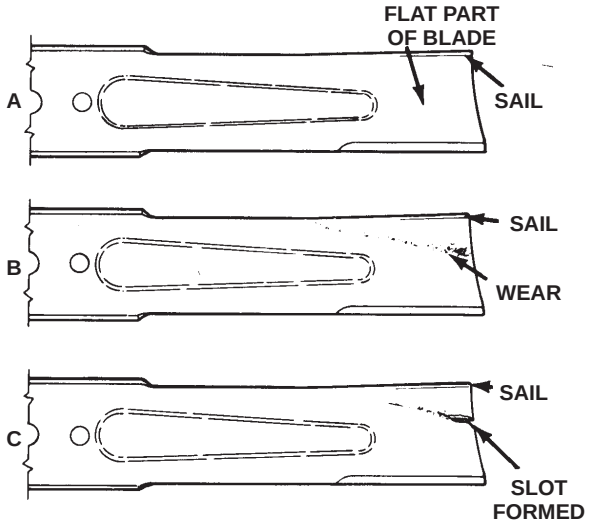

Figure 35

3. Examine the cutting edges of all blades. Sharpen the cutting edges if they are dull or nicked. Sharpen only the top side of the cutting edge and maintain the original cutting angle to ensure sharpness (Fig. 36). The blade will remain balanced if the same amount of metal is removed from both cutting edges.

Warning

If the blade is allowed to wear, a slot will form between the sail and flat part of the blade (Fig. 35-C). Eventually, a piece of the blade may break off and be thrown from under the housing, possibly resulting in serious injury to yourself or bystanders.

- **Inspect the blade periodically for wear or damage.**
- **Replace a worn or damaged blade with a new Toro blade to ensure continued safety certification of the product.**

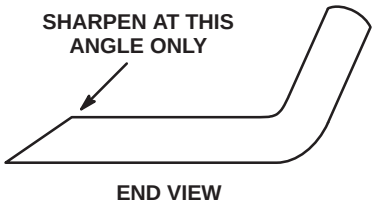

Figure 36

4. To check the blade for being straight and parallel, lay the blade on a level surface and check the ends. The ends of the blade must be slightly lower than the center, and the cutting edge must be lower than the heel of the blade. This blade will produce a good quality of cut and

require minimal power from the engine. By contrast a blade that is higher at the ends than the center, or if cutting edge is higher than the heel, the blade is bent or warped and must be replaced.

5. Install the blade—sail facing toward the cutting unit—with the anti-scalp cup and blade bolt. Tighten the blade bolt to 85–110 ft.-lb. (115–149 N·m).

Correcting Cutting Unit Mismatch

If there is mismatch between the blades, the grass will appear streaked when it is cut. This problem can be corrected by making sure that the blades are straight and all of the blades are cutting on the same plane.

1. Using a 3 foot long (1 m) carpenters level, find a level surface on the shop floor.
2. Raise the height-of-cut to the highest position; refer to Adjusting the Height-Of-Cut, page 15.
3. Lower the cutting unit onto a flat surface. Remove the covers from the top of the cutting unit.
4. Loosen the flange nut securing the idler pulley to release the belt tension.
5. Rotate the blades until the ends face forward and backward. Measure from the floor to the front tip of the cutting edge and remember this dimension. Then rotate the same blade so that the opposite end is forward and measure again. The difference between the dimensions must not exceed 1/8 in. (3 mm). If the dimension exceeds 1/8 in. (3 mm), replace the blade because it is bent. Make sure to measure all of the blades.
6. Compare the measurements of the outer blades with the center blade. The center blade must not be more than 3/8 in. (10 mm) lower than the outer blades. If the center blade is more than 3/8 in. (10 mm) lower than the outer blades, proceed to step 7 and add shims between the spindle housing and bottom of the cutting unit.
7. Remove the capscrews, flat washers, lock washers, and nuts from the outer spindle in the area where the shims must be added. To raise or lower the blade, add a shim, Part No. 3256-24, between the spindle housing and bottom of the cutting unit. Continue to check the alignment of the blades and add shims until the tips of blades are within the required dimension.

Important Do not use more than 3 shims at any one hole location. Use a decreasing numbers of shims in adjacent holes if more than one shim is added to any one hole location.

8. Readjust the idler pulley and install the belt covers.

Hydraulic Schematic

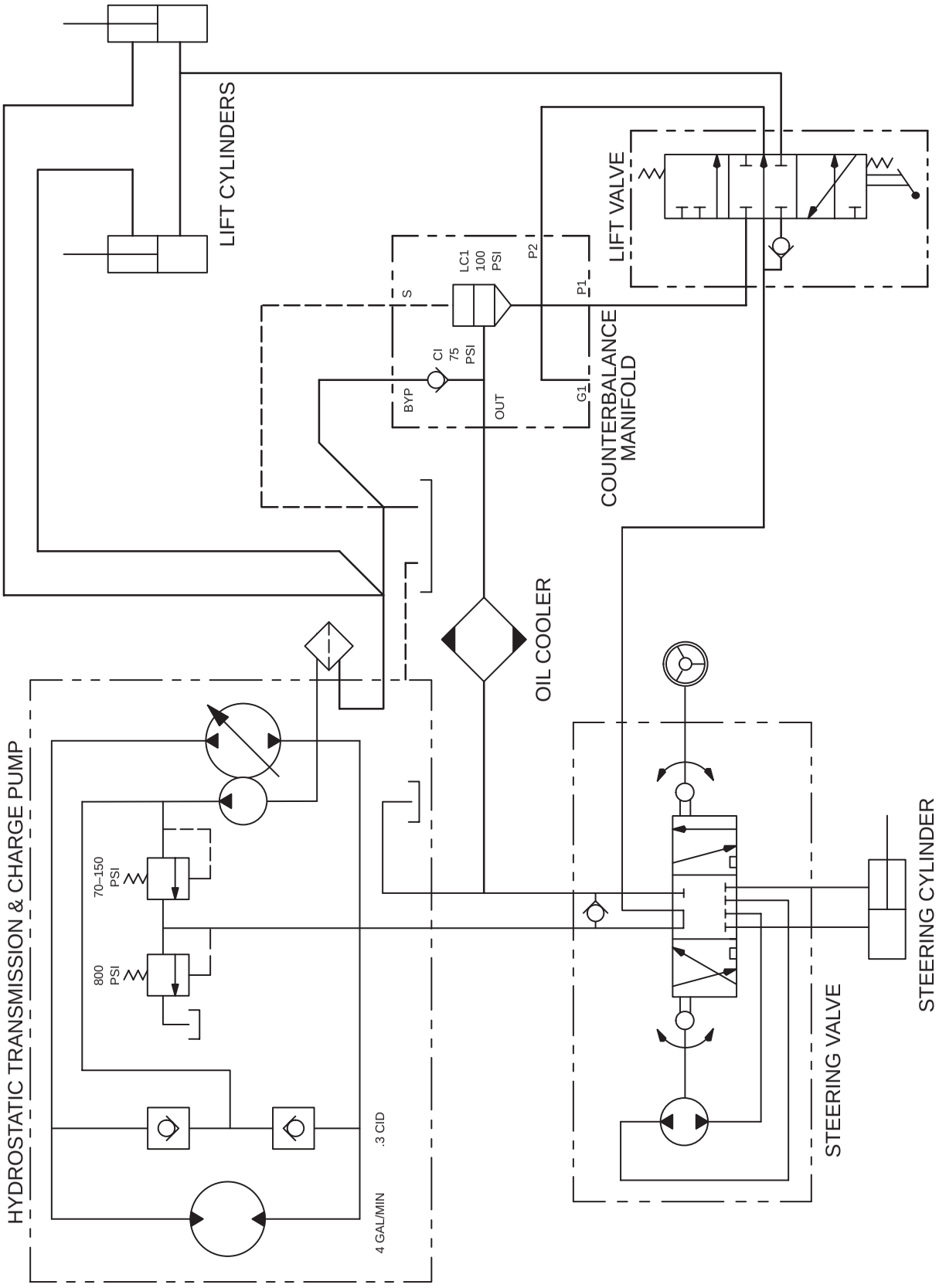

Troubleshooting

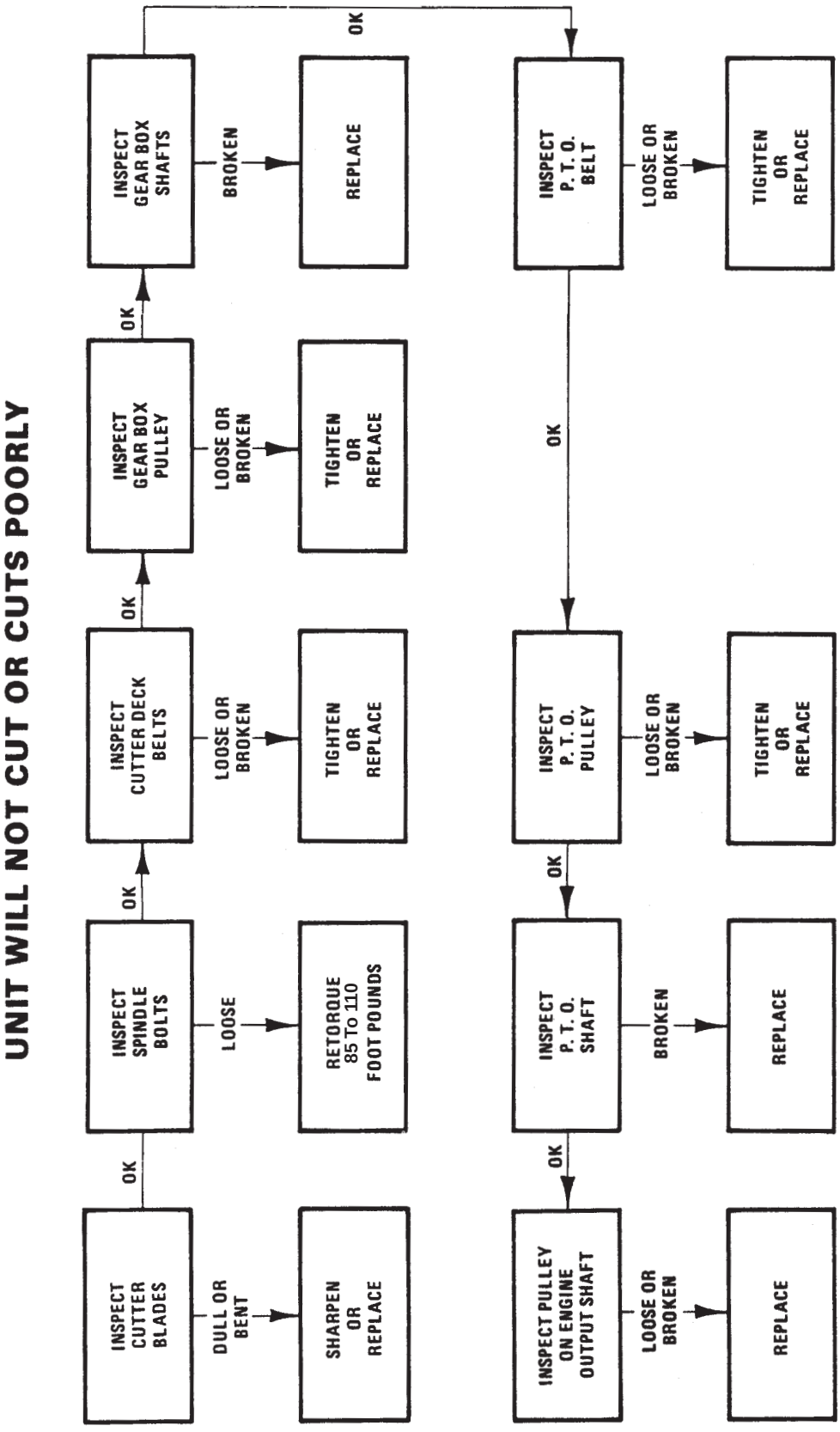

The Toro General Commercial Products Warranty

A Two-Year Limited Warranty

Conditions and Products Covered

The Toro Company and its affiliate, Toro Warranty Company, pursuant to an agreement between them, jointly warrant your Toro Commercial Product ("Product") to be free from defects in materials or workmanship for two years or 1500 operational hours*, whichever occurs first. Where a warrantable condition exists, we will repair the Product at no cost to you including diagnosis, labor, parts, and transportation. This warranty begins on the date the Product is delivered to the original retail purchaser.

* Product equipped with hour meter

Instructions for Obtaining Warranty Service

You are responsible for notifying the Commercial Products Distributor or Authorized Commercial Products Dealer from whom you purchased the Product as soon as you believe a warrantable condition exists.

If you need help locating a Commercial Products Distributor or Authorized Dealer, or if you have questions regarding your warranty rights or responsibilities, you may contact us at:

Toro Commercial Products Service Department
Toro Warranty Company
8111 Lyndale Avenue South
Bloomington, MN 55420-1196
952-888-8801 or 800-982-2740
E-mail: commercial.service@toro.com

Owner Responsibilities

As the Product owner, you are responsible for required maintenance and adjustments stated in your operator's manual. Failure to perform required maintenance and adjustments can be grounds for disallowing a warranty claim.

Items and Conditions Not Covered

Not all product failures or malfunctions that occur during the warranty period are defects in materials or workmanship. This express warranty does not cover the following:

- Product failures which result from the use of non-Toro replacement parts, or from installation and use of add-on, modified, or unapproved accessories
- Product failures which result from failure to perform required maintenance and/or adjustments
- Product failures which result from operating the Product in an abusive, negligent or reckless manner
- Parts subject to consumption through use unless found to be defective. Examples of parts which are consumed, or used up, during normal Product operation include, but are not limited to, blades, reels, bedknives, tines, spark plugs, castor wheels, tires, filters, belts, etc.
- Failures caused by outside influence. Items considered to be outside influence include, but are not limited to, weather, storage practices, contamination, use of unapproved coolants, lubricants, additives, or chemicals, etc.
- Normal "wear and tear" items. Normal "wear and tear" includes, but is not limited to, damage to seats due to wear or abrasion, worn painted surfaces, scratched decals or windows, etc.

Parts

Parts scheduled for replacement as required maintenance are warranted for the period of time up to the scheduled replacement time for that part.

Parts replaced under this warranty become the property of Toro. Toro will make the final decision whether to repair any existing part or assembly or replace it. Toro may use factory remanufactured parts rather than new parts for some warranty repairs.

General Conditions

Repair by an Authorized Toro Distributor or Dealer is your sole remedy under this warranty.

Neither The Toro Company nor Toro Warranty Company is liable for indirect, incidental or consequential damages in connection with the use of the Toro Products covered by this warranty, including any cost or expense of providing substitute equipment or service during reasonable periods of malfunction or non-use pending completion of repairs under this warranty. Except for the Emissions warranty referenced below, if applicable, there is no other express warranty. All implied warranties of merchantability and fitness for use are limited to the duration of this express warranty.

Some states do not allow exclusions of incidental or consequential damages, or limitations on how long an implied warranty lasts, so the above exclusions and limitations may not apply to you.

This warranty gives you specific legal rights, and you may also have other rights which vary from state to state.

Note regarding engine warranty: The Emissions Control System on your Product may be covered by a separate warranty meeting requirements established by the U.S. Environmental Protection Agency (EPA) and/or the California Air Resources Board (CARB). The hour limitations set forth above do not apply to the Emissions Control System Warranty. Refer to the Engine Emission Control Warranty Statement printed in your operator's manual or contained in the engine manufacturer's documentation for details.

Countries Other than the United States or Canada

Customers who have purchased Toro products exported from the United States or Canada should contact their Toro Distributor (Dealer) to obtain guarantee policies for your country, province, or state. If for any reason you are dissatisfied with your Distributor's service or have difficulty obtaining guarantee information, contact the Toro importer. If all other remedies fail, you may contact us at Toro Warranty Company.

Part No. 374-0031 Rev. a