Form No. 3456-854 Rev F

TORO®

Count on it.

Operator's Manual

8 and 11-Blade Radial or Forward Swept EdgeSeries™ DPA Cutting Unit with 7in Reel

Reelmaster® 3575 or 5010 Series Traction Unit

Model No. 03638—Serial No. 405375467 and Up
Model No. 03639—Serial No. 405375467 and Up
Model No. 03641—Serial No. 405375467 and Up
Model No. 03643—Serial No. 400000000 and Up

Register at www.Toro.com.
Original Instructions (EN)

CE UK CA

3456-854

This product complies with all relevant European directives. For details, please see the Declaration of Incorporation (DOI) at the back of this publication.

Model No.	
Serial No.	

Introduction

This cutting unit is designed for cutting grass on well-maintained lawns in golf courses, parks, sports fields, and on commercial grounds. Using this product for purposes other than its intended use could prove dangerous to you and bystanders.

Read this information carefully to learn how to operate and maintain your product properly and to avoid injury and product damage. You are responsible for operating the product properly and safely.

Visit www.Toro.com for product safety and operation training materials, accessory information, help finding a dealer, or to register your product.

Whenever you need service, genuine Toro parts, or additional information, contact an Authorized Service Dealer or Toro Customer Service and have the model and serial numbers of your product ready. Figure 1 identifies the location of the model and serial numbers on the product. Write the numbers in the space provided.

Important: **With your mobile device, you can scan the QR code on the serial number plate (if equipped) to access warranty, parts, and other product information.**

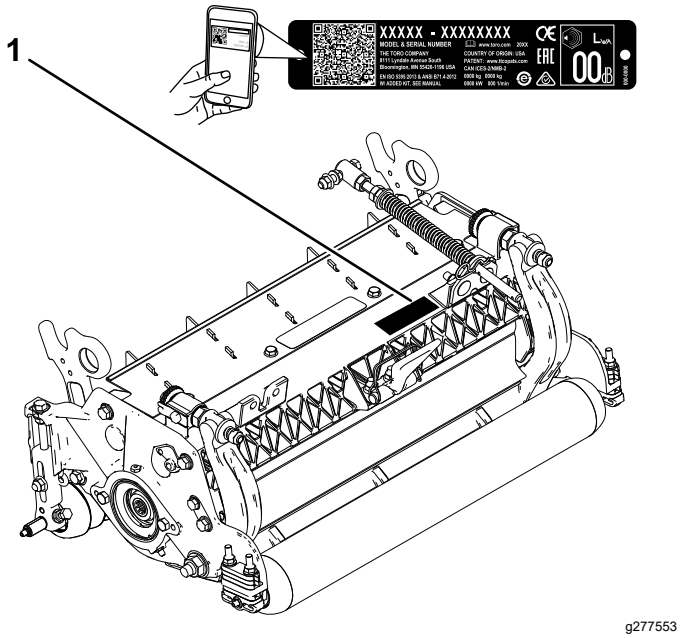

Figure 1

1. Model and serial number location

This manual identifies potential hazards and has safety messages identified by the safety-alert symbol (Figure 2), which signals a hazard that may cause serious injury or death if you do not follow the recommended precautions.



g000502

Figure 2

Safety-alert symbol

This manual uses 2 words to highlight information. **Important** calls attention to special mechanical information and **Note** emphasizes general information worthy of special attention.

Contents

Safety 3
- General Safety 3
- Cutting Unit Safety 3
- Blade Safety 3
- Safety and Instructional Decals 3

Setup 4
- 1 Installing the Reel Grease Fitting 4
- 2 Adjusting the Cutting Unit 5
- 3 Installing the Reel Motors 5

Product Overview 6
- Specifications 6
- Attachments/Accessories 6

Operation 6
- Adjusting the Cutting Unit 6
- Adjusting the Height of Cut 10
- Height-of-Cut and Bedknife Selection Charts 12
- Height-of-Cut Chart Terms 14

Maintenance 15
- Supporting the Cutting Unit 15
- Lubricating the Cutting Units 15
- Bedknife Specifications 16
- Reel Specifications 20
- Servicing the HD Dual Point Adjusters (DPA) 21
- Servicing the Roller 23

© 2025—The Toro® Company
8111 Lyndale Avenue South
Bloomington, MN 55420

Contact us at www.Toro.com.
Printed in the USA
All Rights Reserved

Safety

General Safety

This product is capable of amputating hands and feet. Always follow all safety instructions to avoid serious personal injury.

- Read and understand the contents of this *Operator's Manual* before starting the machine.
- Use your full attention while operating the machine. Do not engage in any activity that causes distractions; otherwise, injury or property damage may occur.
- Do not put your hands or feet near moving components of the machine.
- Do not operate the machine without all guards and other safety protective devices in place and functioning properly on the machine.
- Keep clear of any discharge opening.
- Keep bystanders and children out of the operating area. Never allow children to operate the machine.
- Before you leave the operator's position, do the following:
  - Park the machine on a level surface.
  - Lower the cutting unit(s).
  - Disengage the drives.
  - Engage the parking brake (if equipped).
  - Shut off the engine and remove the key.
  - Wait for all movement to stop.

Improperly using or maintaining this machine can result in injury. To reduce the potential for injury, comply with these safety instructions and always pay attention to the safety-alert symbol⚠, which means Caution, Warning, or Danger—personal safety instruction. Failure to comply with these instructions may result in personal injury or death.

Cutting Unit Safety

- The cutting unit is only a complete machine when installed on a traction unit. Read the traction unit *Operator's Manual* carefully for complete instructions on the safe use of the machine.
- Stop the machine, remove the key (if equipped), and wait for all movement to stop before inspecting the attachment after striking an object or if there is an abnormal vibration in the machine. Make all necessary repairs before resuming operation.
- Keep all parts in good working condition and all hardware tightened. Replace all worn or damaged decals.
- Use only accessories, attachments, and replacement parts approved by Toro.

Blade Safety

A worn or damaged blade can break, and a piece of the blade could be thrown toward you or bystanders, resulting in serious personal injury or death.

- Inspect the blade periodically for wear or damage.
- Use care when checking the blades. Wrap the blades or wear gloves, and use caution when servicing the blades. Only replace or sharpen the blades; never straighten or weld them.
- On multi-bladed machines, take care as rotating 1 blade can cause other blades to rotate.

Safety and Instructional Decals

Safety decals and instructions are easily visible to the operator and are located near any area of potential danger. Replace any decal that is damaged or missing.

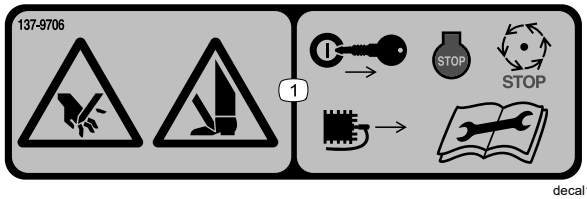

decal137-9706

137-9706

1. Cutting hazard of the hand or foot—shut off the engine, remove the key or disconnect the spark plug, wait for all moving parts to stop, and read the *Operator's Manual* before performing maintenance.

Setup

Loose Parts

Use the chart below to verify that all parts have been shipped.

Procedure	Description	Qty.	Use
1	Straight grease fitting	1	Install the reel grease fitting.
2	No parts required	–	Adjust the cutting unit
3	O-ring Cap screws (may come assembled)	1 2	Install the reel motors.

Media and Additional Parts

Description	Qty.	Use
Operator's Manual Parts Catalog (not included)—refer to the included postcard for information on obtaining the Parts Catalog	1 –	Review the material and save it in an appropriate place.

Note: Determine the left and right sides of the machine from the normal operating position.

1

Installing the Reel Grease Fitting

Parts needed for this procedure:

1	Straight grease fitting

Procedure

Install the grease fitting on the reel-motor side of the cutting unit. Refer to Figure 3 to determine the position of the reel motors based on the position of the cutting unit on the machine.

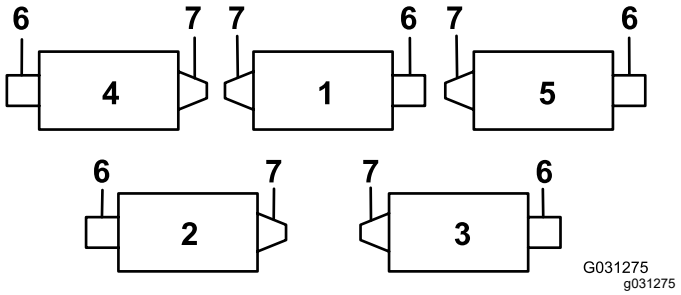

Figure 3

1. Cutting unit 1
2. Cutting unit 2
3. Cutting unit 3
4. Cutting unit 4
5. Cutting unit 5
6. Reel motor
7. Weight or other accessory (sold separately)

1. Remove and discard the setscrew on the reel-motor side plate (Figure 4).

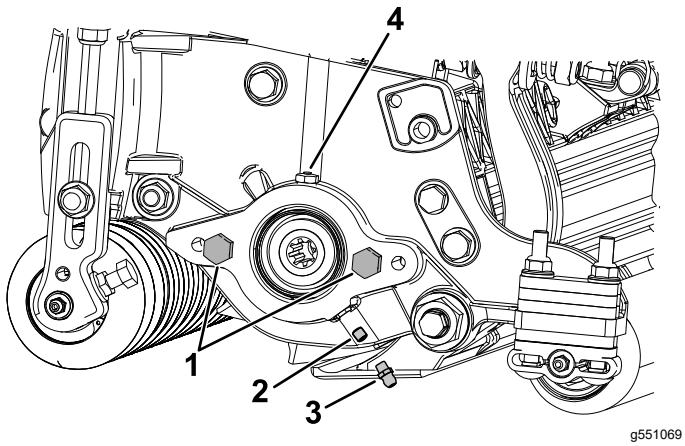

Figure 4

1. Hex bolt (2)
2. Setscrew
3. Grease fitting
4. Grease vent

2. Install the straight grease fitting (Figure 4).

   Note: The grease fitting is for lubricating reel motor splines.

2

Adjusting the Cutting Unit

No Parts Required

Procedure

1. Adjust the bedknife to the reel.
2. Adjust the rear roller for your height-of-cut requirements.
3. Set the height of cut.
4. Adjust the rear shield if necessary.
5. Once all of the cutting units are installed on the traction unit and operational, adjust the turf compensation springs.

Refer to Operation (page 6) for complete instructions for performing these adjustments.

3

Installing the Reel Motors

Parts needed for this procedure:

1	O-ring
2	Cap screws (may come assembled)

Procedure

Important: **Before installing the reel motors, obtain and install the counter weights or other accessories on the opposite side of the cutting units from the reel motors as described in the instructions provided with the weights or accessories.**

1. Install the cutting units onto the traction unit; refer to the traction unit *Operator's Manuals* for instructions.
2. If there are no cap screws on the reel-motor side plate, install them (Figure 4).
3. Install the O-ring on the reel motor (Figure 5).

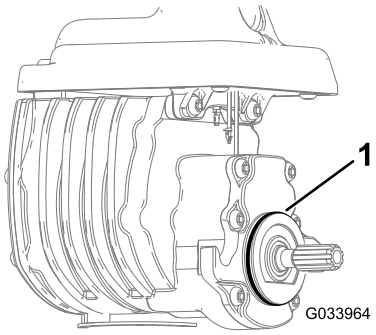

Figure 5

1. O-ring

4. Install the reel motor and secure it with the cap screws.
5. Grease the side plate until excess grease comes out of the grease vent (Figure 4).

Product Overview

Specifications

Cutting Unit	Weight
03638	54 kg (118 lb)
03639	54 kg (118 lb)
03641	55 kg (121 lb)
03643	55 kg (121 lb)

Attachments/Accessories

A selection of Toro approved attachments and accessories is available for use with the machine to enhance and expand its capabilities. Contact your Authorized Service Dealer or authorized Toro distributor or go to www.Toro.com for a list of all approved attachments and accessories.

To ensure optimum performance and continued safety certification of the machine, use only genuine Toro replacement parts and accessories. Replacement parts and accessories made by other manufacturers could be dangerous, and such use could void the product warranty.

Operation

Refer to your traction unit *Operator's Manual* for detailed operation instructions. Before using the cutting unit each day, adjust the bedknife; refer to Adjusting the Bedknife to the Reel (page 8). Test the quality of cut by cutting a test swath before using the cutting unit to ensure that the finished cut is correct.

Adjusting the Cutting Unit

Adjusting the Rear Shield

Under most conditions, you can attain the best clipping dispersion when the rear shield is closed (front discharge). When conditions are heavy or wet, you may open the rear shield.

To open the rear shield (Figure 6), loosen the bolt securing the shield to the left side plate, rotate the shield to the open position, and tighten the bolt.

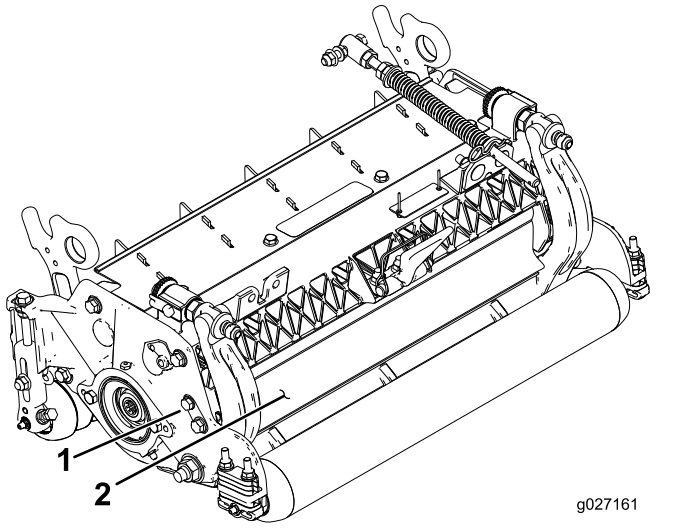

g027161

Figure 6

1. Bolt
2. Rear shield

Adjusting the Bedknife-to-Reel Contact

Adjusting the Bedknife Daily

The dual knob bedknife-to-reel adjustment system incorporated in this cutting unit simplifies the adjustment procedure needed to deliver optimum mowing performance. The precise adjustment possible with the dual knob/bedbar design gives the necessary control to provide a continual self-sharpening action-thus maintaining sharp cutting edges, ensuring good quality of cut, and greatly reducing the need for routine backlapping.

Prior to mowing each day, or as required, check each cutting unit to verify proper bedknife-to-reel contact. **Perform this procedure even when the quality of cut is acceptable.**

1. Lower the cutting units onto a hard surface, shutoff the engine, and remove the ignition key.
2. Slowly rotate the reel in a reverse direction, listening for reel-to-bedknife contact.
   - If no contact is evident, adjust the bedknife as follows:
     A. Turn the bedbar adjusting screws clockwise (Figure 7), 1 click at a time, until you feel and hear light contact.

     Note: The adjustment screws have detents corresponding to 0.022 mm (0.0009 inch) bedknife movement for each indexed position. Refer to Adjusting the Bedknife to the Reel (page 8).

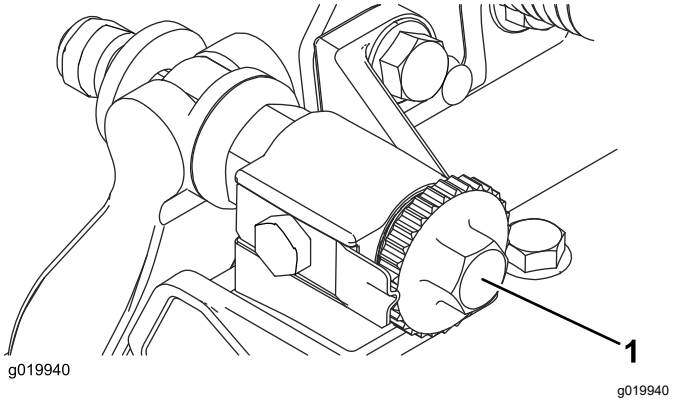

Figure 7

1. Bedbar-adjusting screw

     B. Insert a long strip of cutting performance paper (Toro Part No. 125-5610) between the reel and the bedknife, perpendicular to the bedknife (Figure 8), then **slowly** rotate the reel forward; it should cut the paper; if not, repeat steps A and B until it does.

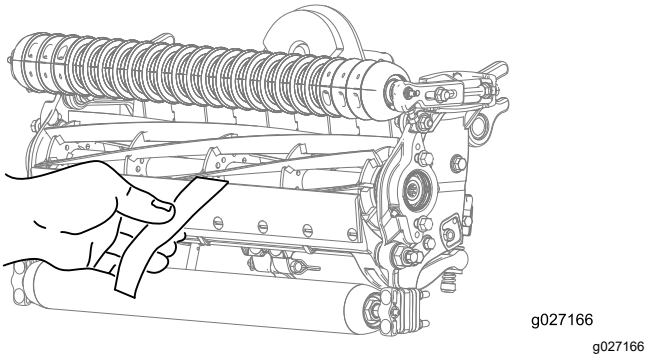

Figure 8

   - If excessive contact/reel drag is evident, either backlap, reface the front of the bedknife, or grind the bedknife and/or the reel to achieve the sharp edges needed for precision cutting; refer to the *Toro Manual for Sharpening Reel and Rotary Mowers*, Form No. 09168SL.

Important: **Light contact is preferred at all times. If you do not maintain light contact, the bedknife/reel edges will not sufficiently self-sharpen and will dull after a period of operation. If you maintain excessive contact, bedknife/reel wear will be accelerated, uneven wear can result, and the quality of cut may decline.**

Note: After extended running, a ridge will eventually develop at both ends of the bedknife. Round off these notches or file them flush with the cutting edge of the bedknife to ensure smooth operation.

Note: Over time, you will need to grind the chamfer (Figure 9), as it is only designed to last 40% of the bedknife life.

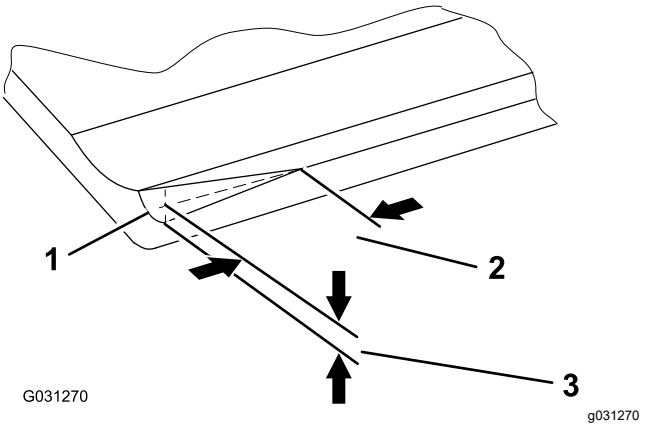

Figure 9

1. Lead-in chamfer on right end of bedknife
2. 6 mm (0.25 inch)
3. 1.5 mm (0.060 inch)

Note: Do not make the lead-in chamfer too large as it may cause turf tufting.

Adjusting the Bedknife to the Reel

Use this procedure during initial cutting-unit setup and after grinding, backlapping, or disassembling the reel. This is not a daily adjustment.

- After backlapping the cutting unit or grinding the bedknife and/or the reel, you may need to mow with the cutting unit for a few minutes and then perform this procedure to adjust the bedknife to the reel as the reel and bedknife adjust to each other.
- You may need additional adjustments if the turf is extremely dense or your cutting height is very low.

1. Position the cutting unit on a flat, level work surface.
2. Turn the bedbar-adjusting screws counterclockwise to ensure that the bedbar does not contact the reel (Figure 10).

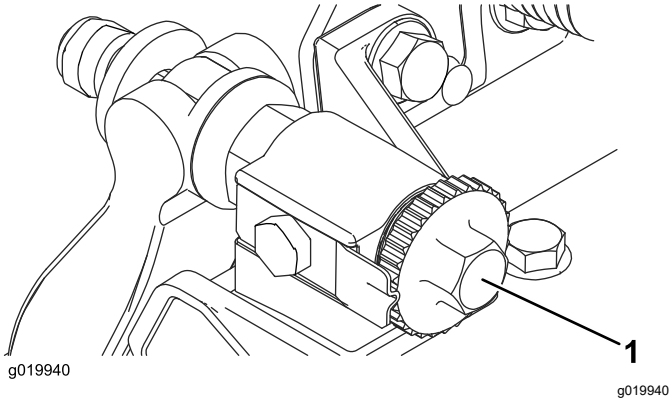

Figure 10

1. Bedbar-adjusting screw

3. Tip the cutting unit to expose the bedknife and reel.

   Important: **Ensure that the nuts on the back end of the bedbar-adjusting screws are not resting on the work surface; use the kickstand (Figure 11).**

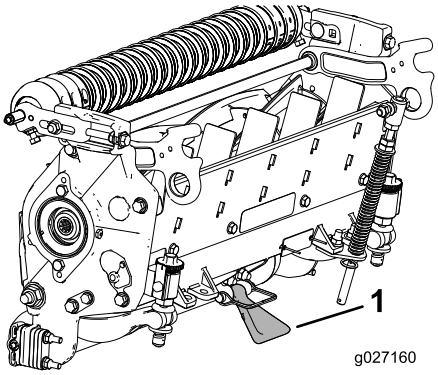

Figure 11

1. Kickstand

4. Rotate the reel so that 1 of the blades crosses the bedknife approximately 25 mm (1 inch) in from the end of the bedknife on the right side of the cutting unit.
5. Make an identifying mark on the reel blade where it crosses the bedknife edge.

   Note: This makes later adjustments easier.
6. Insert a 0.05 mm (0.002 inch) shim (Part No. 140-5531) between the reel blade and the bedknife edge at the point marked in step 5.
7. Turn the right bedbar adjuster clockwise until you feel **light** pressure on the shim, then back off the bedbar adjuster 2 clicks and remove the shim.

   Note: Adjusting 1 side of the cutting unit affects the other side, the 2 clicks will provide clearance for when the other side is adjusted.

   Note: If starting with a large gap, both sides should initially be drawn closer by alternately tightening the right and left sides.
8. **Slowly** rotate the reel so that the same blade that you checked on the right side is crossing the bedknife approximately 25 mm (1 inch) in from the end of the bedknife on the left side of the cutting unit.
9. Turn the left bedbar adjuster clockwise until the shim can be slid through the reel to bedknife gap with light drag.
10. Return to the right side and adjust as necessary to get light drag on the shim between the same blade and bedknife.
11. Repeat steps 9 and 10 until the shim can be slid through both gaps with slight drag, but 1 click in on both sides prevents the shim from passing through on both sides.

    Note: The bedknife is now parallel to the reel.

12. From this position (i.e., 1 click in and shim not passing through) turn the bedbar adjusters clockwise 1 click each.

    Note: Each click turned moves the bedknife 0.022 mm (0.0009 inch). **Do not overtighten the adjusting screws.**

13. Insert a long strip of cutting performance paper (Toro Part No. 125-5610) between the reel and bedknife, perpendicular to the bedknife (Figure 8), then **slowly** rotate the reel forward; it should cut the paper; if not, turn each bedbar adjusting bolt clockwise 1 click and repeat this step until it cuts the paper.

    Note: If excessive contact/reel drag is evident, either backlap, reface the front of the bedknife, or grind the bedknife and/or the reel to achieve the sharp edges needed for precision cutting; refer to the *Toro Manual for Sharpening Reel and Rotary Mowers*, Form No. 09168SL.

Adjusting the Rear-Roller Height

1. Adjust the rear roller brackets (Figure 12) to the desired height-of-cut range by positioning the required amount of spacers below the sideplate-mounting flange (Figure 12) per the Height-of-Cut and Bedknife Selection Charts (page 12).

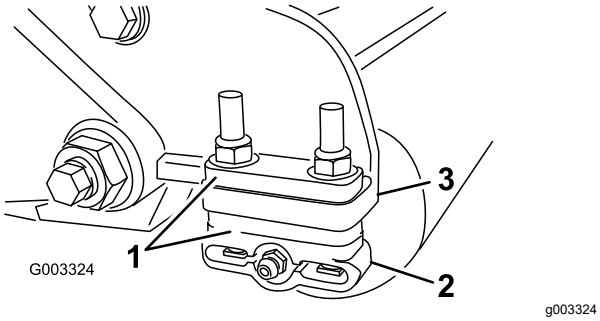

Figure 12

1. Spacer
2. Roller bracket
3. Sideplate-mounting flange

2. Raise the rear of the cutting unit and place a block under the bedknife.
3. Remove the 2 nuts securing each roller bracket and spacer to each sideplate-mounting flange.
4. Lower the roller and screws from the sideplate-mounting flanges and spacers.
5. Place the spacers onto the screws on the roller brackets.
6. Secure the roller bracket and spacers to underside of side plate mounting flanges with the nuts previously removed.
7. Verify that the bedknife-to-reel contact is correct. Tip the mower to expose the front and rear rollers and bedknife.

    Note: The position of the rear roller to the reel is controlled by the machining tolerances of the assembled components; therefore, paralleling is not required. A limited amount of adjustment is possible by setting the cutting unit on a surface plate and loosening the sideplate-mounting cap screws (Figure 13). Adjust and tighten the cap screws. Torque the cap screws to 37 to 45 N·m (27 to 33 ft-lb).

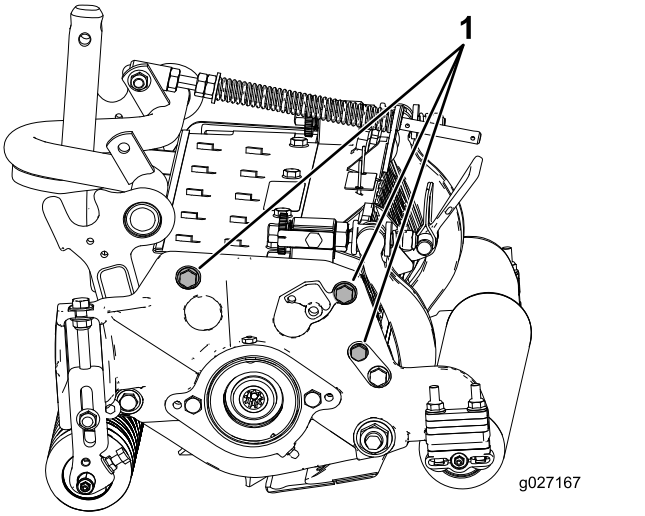

Figure 13

1. Sideplate-mounting cap screws

Adjusting the Turf-Compensation Settings

The turf-compensation spring transfers the weight from the front to the rear roller. This helps to reduce a wave pattern in the turf, also known as marcelling or bobbing.

Important: **Make the spring adjustments with the cutting unit mounted to the traction unit, pointing straight ahead and lowered to the shop floor.**

1. Make sure that the hairpin cotter is installed in the rear hole in the spring rod (Figure 14).

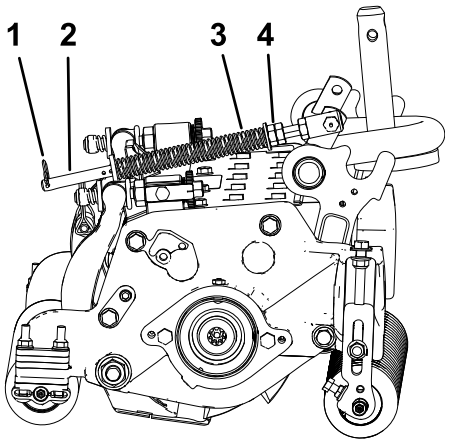

Figure 14

1. Hairpin cotter
2. Spring rod
3. Turf-compensation spring
4. Hex nuts

2. Tighten the hex nuts on the front end of the spring rod until the compressed length of the spring is 15.9 cm (6.25 inches) (Figure 14).

   Note: When operating the machine on rough terrain, decrease the spring length by 1.3 cm (1/2 inch).

   Note: Reset the turf compensation setting if the HOC setting or the aggressiveness-of-cut setting changes.

Adjusting the Height of Cut

Note: For heights of cut greater than 2.54 cm (1.00 inch) the High Height-of-Cut Kit must be installed.

1. Loosen the locknuts securing the height-of-cut brackets to the cutting-unit side plates (Figure 15).

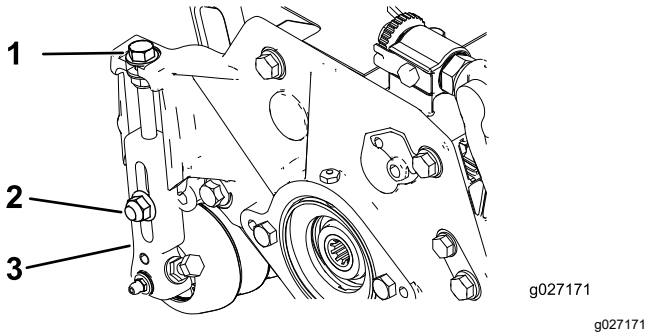

Figure 15

1. Adjusting bolt
2. Locknut
3. Height-of-cut bracket

2. Loosen the nut on the gauge bar (Figure 16) and set the adjusting bolt to the desired height of cut.

   Note: The distance between the bottom of the bolt head and the face of the bar is the height of cut.

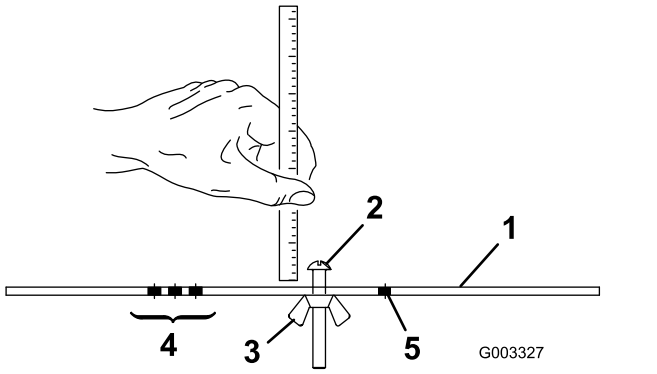

Figure 16

1. Gauge bar
2. Height-adjusting bolt
3. Nut
4. Holes used for setting groomer depth (HOG)
5. Hole not used

3. Hook the bolt head on the cutting edge of the bedknife and rest the rear end of the bar on the rear roller (Figure 17).

   Note: For checking the HOC on cutting units installed with shoulder rollers, place the gauge bar on the larger diameter shoulders on the ends of the shoulder roller.

4. Rotate the adjusting bolt until the front roller contacts the gauge bar (Figure 17).

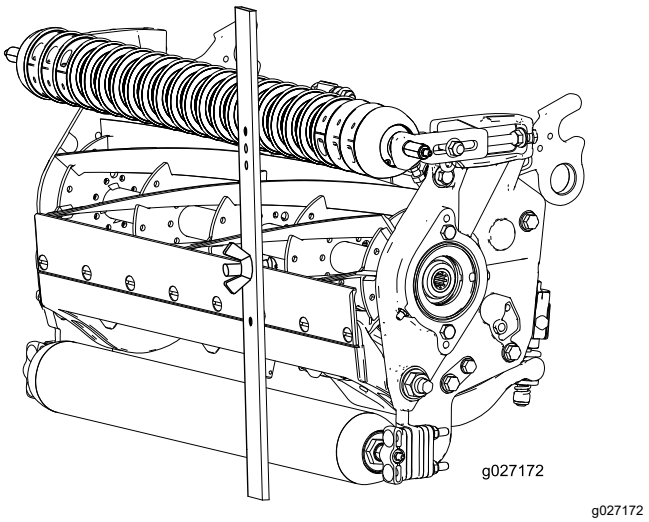

Figure 17

5. Adjust both ends of the roller until the entire roller is parallel to the bedknife.

   Important: **When set properly, the rear and front rollers will contact the gauge**

bar and the bolt will be snug against the bedknife. This ensures that the height of cut is identical at both ends of the bedknife.

6. Tighten the nuts to secure the adjustment.

   Note: Do not overtighten the nuts. Tighten them just enough to remove play from the washer.

Height-of-Cut and Bedknife Selection Charts

Height-of-Cut Chart				
HOC Setting	**Aggressiveness of Cut**	**No. of Rear Spacers**	**No. of Chain Links**	**With Groomer kits installed****
0.64 cm (0.250 inch)	Less	0	5	Y
	Normal	0	5	Y
	More	1	5	-
0.95 cm (0.375 inch)	Less	0	5	Y
	Normal	1	5	Y
	More	2	5	-
1.27 cm (0.500 inch)	Less	0	5	Y
	Normal	1	5	Y
	More	2	5	Y
1.56 cm (0.625 inch)	Less	1	5	Y
	Normal	2	5	Y
	More	3	5	-
1.91 cm (0.750 inch)	Less	2	5	Y
	Normal	3	5	Y
	More	4	5	-
2.22 cm (0.875 inch)	Less	2	5	Y
	Normal	3	5	Y
	More	4	5	-
2.54 cm (1.000 inch)	Less	3	5	Y
	Normal	4	5	Y
	More	5	4+	-
2.86 cm (1.125 inches)	Less	4	5	-
	Normal	5	5	-
	More	6	5	-
3.18 cm (1.250 inches)*+	Less	4	5	-
	Normal	5	5	-
	More	6	5	-
3.49 cm (1.375 inches)*+	Less	4	5	-
	Normal	5	5	-
	More	6	5	-
3.81 cm (1.500 inches)*+	Less	5	5	-
	Normal	6	5	-
	More	7	5	-
4.13 cm (1.625 inches)*+	Less	6	4	-
	Normal	7	4	-
	More	8	4	-
4.44 cm (1.750 inches)*+	Less	6	4	-
	Normal	7	4	-
	More	8	5	-
4.76 cm (1.875 inches)*+	Less	7	4	-
	Normal	8	5	-
	More	9	5	-
5.08 cm (2.000 inches)*+	Less	7	5	-
	Normal	8	5	-
	More	9	5	-

+ Indicates that the U-bracket, on the lift arm, is positioned in the bottom hole (Figure 20).

* The High HOC Kit (Part No. 137-0890) must be installed. Position the HOC bracket in the top side-plate hole.

** Y indicates that this combination of HOC and spacers can be used with groomers.

Use the following chart to determine which bedknife is best suited for the desired height of cut.

Bedknife/Height-of-Cut Selection Chart			
Bedknife	**Part No.**	**Bedknife Lip Height**	**Height of Cut**
Tournament (Optional)	147-1257	4.3 mm (0.170 inch)	3.8 to 9.5 mm (0.150 to 0.375 inch)
Low HOC (Model 03643)	147-1244	5.6 mm (0.220 inch)	6.4 to 12.7 mm (0.250 to 0.500 inch)
EdgeMax® Low HOC (Model 03641)	137-6093	5.6 mm (0.220 inch)	6.4 to 12.7 mm (0.250 to 0.500 inch)
Extended Low HOC (Optional)	147-1243	5.6 mm (0.220 inch)	6.4 to 12.7 mm (0.250 to 0.500 inch)
Extended EdgeMax® Low HOC (Optional)	119-4280	5.6 mm (0.220 inch)	6.4 to 12.7 mm (0.250 to 0.500 inch)
EdgeMax® (Models 03638 and 03639)	137-6094	6.9 mm (0.270 inch)	9.5 to 38.1 mm (0.375 to 1.50 inches)*
Standard (Optional)	147-1245	6.9 mm (0.270 inch)	9.5 to 38.1 mm (0.375 to 1.50 inches)*
Heavy Duty (Optional)	147-1246	9.3 mm (0.370 inch)	12.7 to 38.1 mm (0.500 to 1.50 inches)
* Warm-season grasses may require the Low HOC bedknife for 12.7 mm (0.500 inch) and below.			

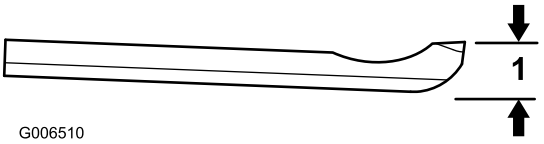

g006510

Figure 18

1. Bedknife lip height

Height-of-Cut Chart Terms

Height-of-Cut Setting (HOC)

This corresponds to the desired height of cut.

Bench-Set Height of Cut

This is the height at which the top edge of the bedknife is set above a flat level surface that contacts the bottom of both the front and rear rollers.

Effective Height of Cut

This is the actual height the grass has been cut. For a given bench-set height of cut, the actual height of cut will vary depending on the type of grass, time of year, turf, and soil conditions. The cutting-unit setup (aggressiveness of cut, rollers, bedknives, attachments installed, turf-compensation settings, etc.) will also affect the effective height of cut. Check the effective height of cut using the Turf Evaluator (Model 04399) regularly to determine the desired bench-set height of cut.

Aggressiveness of Cut

The aggressiveness of cut has a significant impact on the performance of the cutting unit. Aggressiveness of cut refers to the angle of the bedknife relative to the ground (Figure 19).

The best cutting unit setup is dependent on your turf conditions and desired results. Experience with the cutting unit on your turf will determine the best setting to use. Aggressiveness of cut may be adjusted throughout the cutting season to allow for various turf conditions.

In general, less to normal aggressive settings are more appropriate for warm-season grasses (Bermuda, paspalum, zoysia) while cool-season grasses (bent, bluegrass, rye) may require normal to more aggressive setups. More aggressive setups cut more grass off by allowing the spinning reel to pull more grass up into the bedknife.

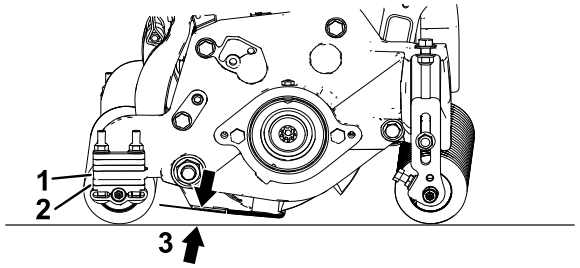

g551080

Figure 19

1. Sideplate-mounting flange
2. Rear spacers
3. Aggressiveness of cut

Rear Spacers

The number of rear spacers determines the aggressiveness of cut for the cutting unit. For a given height of cut, adding spacers below the sideplate-mounting flange increases the aggressiveness of the cutting unit. All cutting units on a given machine must be set to the same aggressiveness of cut (number of rear spacers, Toro Part No. 119-0626); otherwise, the after-cut appearance could be negatively affected (Figure 19).

Chain Links

The location at which the lift-arm chain is attached determines the pitch angle of the rear roller (Figure 20).

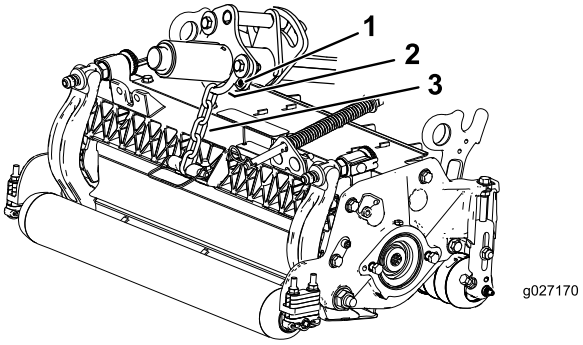

g027170

g027170

Figure 20

1. Lift chain
2. U-backet
3. Bottom hole

Groomer

These are the recommended height-of-cut settings when a groomer kit is installed on the cutting unit.

Maintenance

Supporting the Cutting Unit

Whenever the cutting unit has to be tipped to expose the bedknife/reel, prop up the rear of the cutting unit with the kickstand (supplied with the traction unit) to make sure that the nuts on the back end of the bedbar adjusting screws are not resting on the work surface (Figure 21).

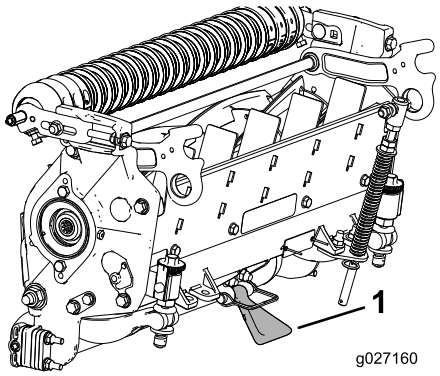

g027160

Figure 21

1. Kickstand

Lubricating the Cutting Units

Each cutting unit has 5 grease fittings (Figure 22) that must be lubricated regularly with No. 2 lithium grease.

There are 2 lubrication points on the front roller, rear roller, and 1 at the reel motor spline.

Note: Lubricating cutting units immediately after washing helps purge water out of the bearings and increases bearing life.

1. Wipe each grease fitting with a clean rag.
2. Apply grease until clean grease comes out of the roller seals and the bearing relief valve.
3. Wipe any excess grease away.

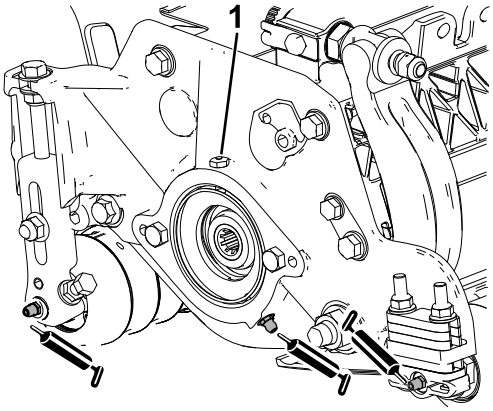

g551081

Figure 22

Grease fitting locations on the reel motor side.

1. Relief valve

Bedknife Specifications

Servicing the Bedknife

Removing the Bedbar/Bedknife Assembly

1. Turn the bedbar-adjusting screws counterclockwise to back the bedknife away from the reel (Figure 23).

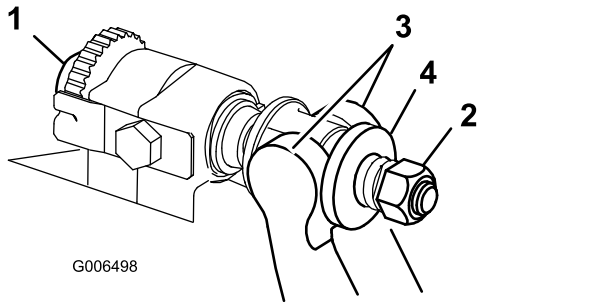

Figure 23

1. Bedbar-adjusting screw
2. Spring-tension nut
3. Bedbar
4. Washer

2. Back out the spring-tension nut, until the washer is no longer tensioned against the bedbar (Figure 23).
3. On each side of the machine, loosen the locknut securing the bedbar bolt (Figure 24).

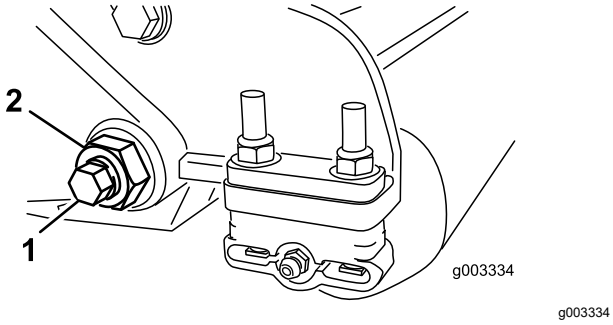

Figure 24

1. Bedbar bolt
2. Locknut

4. Remove each bedbar bolt allowing bedbar to be pulled downward and removed from the cutting unit (Figure 24).

   Account for 2 nylon and 1 stamped steel washer on each end of the bedbar (Figure 25).

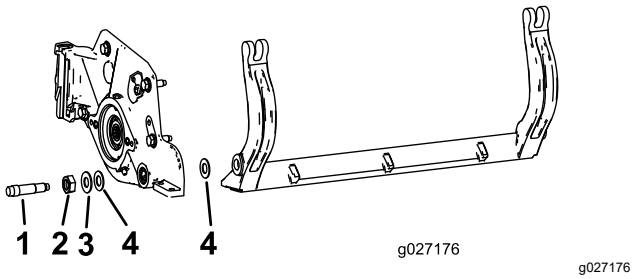

Figure 25

1. Bedbar bolt
2. Bedbar nut
3. Steel washer
4. Nylon washer

5. Remove the bedknife from the bedbar by removing all screws holding it in place. Use a socket wrench with the Bedknife Screw Tool (Part No. TOR510880).

   Note: You may use a mechanical or pneumatic impact wrench to loosen the bedknife screws.

   Note: Discard the bedknife and screws.

Installing the New Bedknife

1. Select a new bedknife per the Height-of-Cut and Bedknife Selection Charts (page 12).
2. Remove the rust, scale, and corrosion from the bedbar surface and apply a thin layer of oil to the bedbar surface.

   Important: **Do not remove casting material from the bedbar. The bedbar is concave in the middle by design; do not grind.**
3. Clean the threads in the bedbar.
4. Apply anti-seize compound on the new bedknife screws and install the bedknife on the bedbar.

   Important: **Only use new bedknife screws.**

   Note: The quantity of screws varies depending on the bedbar.

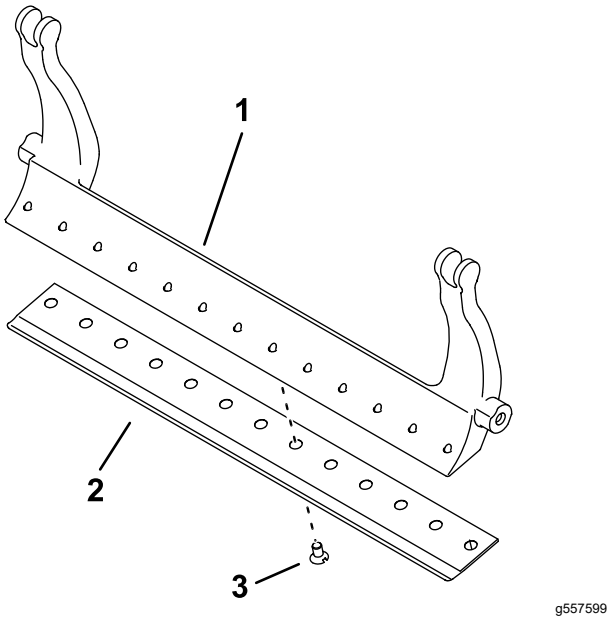

Figure 26
Bedbar with 13 Screws Shown

1. Bedbar
2. Bedknife
3. Screw

5. Torque the 2 outer screws to 1 N·m (10 in-lb).
6. Working from the center of the bedknife, torque the screws to 29.8 +/- 1 N·m (22 +/- 1 ft-lb).

   Important: **Do not tighten the bedknife screws using a mechanical or pneumatic impact wrench.**

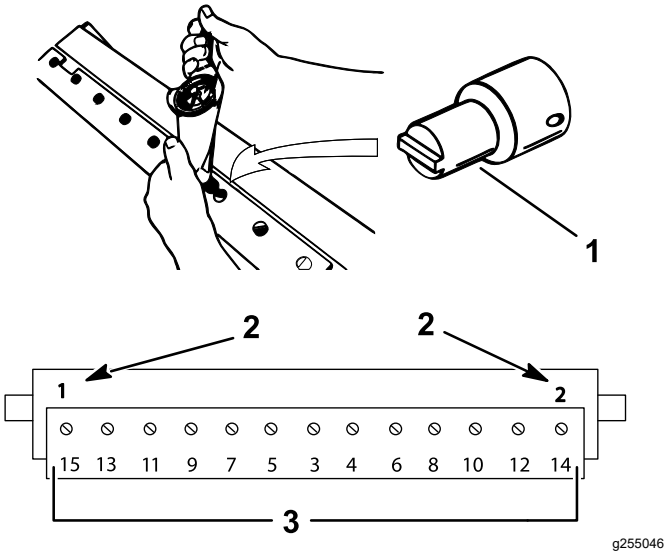

Figure 27

1. Bednife screw tool (Part No. TOR510880)
2. Install and torque these first to 1 N·m (10 in-lb).
3. Torque to 29.8 +/- 1 N·m (22 +/- 1 ft-lb).

7. Grind the new bedknife; refer to Bedknife Service Chart (page 18).

Bedknife Service Chart

The bedknife service limits are listed in the following chart.

Important: **Operating the cutting unit with the bedknife below the service limit may result in poor after-cut appearance and reduce the structural integrity of the bedknife for impacts.**

Bedknife Service Chart				
Bedknife	**Part**	**Bedknife Lip Height**	**Service Limit ***	**Grind Angles** Top/Front Angles
Tournament (Optional)	147-1257	4.3 mm (0.170 inch)	3.4 mm (0.134 inch)	5/5°
EdgeMax® Low HOC (Model 03641)	137-6093	5.6 mm (0.220 inch)	4.8 mm (0.190 inch)	10°/5°
Low HOC (Model 03643)	147-1244	5.6 mm (0.220 inch)	4.8 mm (0.190 inch)	10°/5°
Extended EdgeMax® Low HOC (Optional)	119-4280	5.6 mm (0.220 inch)	4.8 mm (0.190 inch)	10°/10°
Extended Low HOC (Optional)	147-1243	5.6 mm (0.220 inch)	4.8 mm (0.190 inch)	10°/10°
EdgeMax® (Models 03638 and 03639)	137-6094	6.9 mm (0.270 inch)	4.8 mm (0.190 inch)	10°/5°
Standard (Optional)	147-1245	6.9 mm (0.270 inch)	4.8 mm (0.190 inch)	10°/5°
Heavy Duty (Optional)	147-1246	9.3 mm (0.370 inch)	4.8 mm (0.190 inch)	10°/5°

Recommended Top and Front Bedknife Grind Angles (Figure 28)

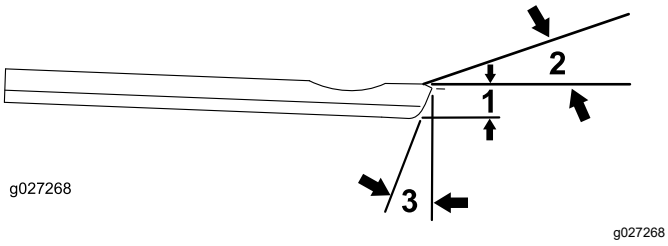

Figure 28

1. Bedknife service limit *
2. Top grind angle
3. Front grind angle

Note: All bedknife service limit measurements reference the bottom of the bedknife (Figure 29)

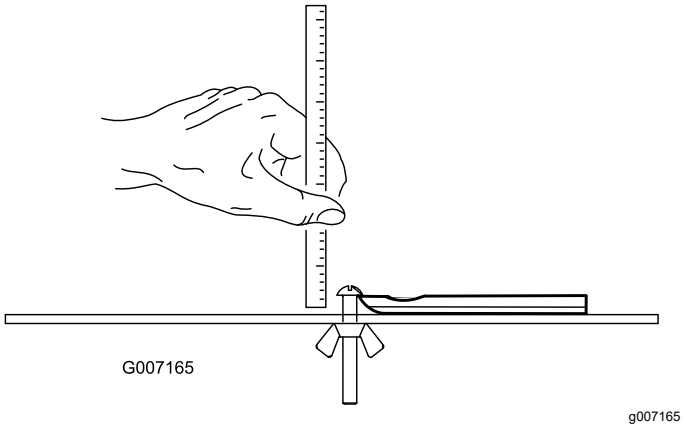

Figure 29

Checking the Top Grind Angle

The angle that you use to grind your bedknives is very important.

Use the angle indicator (Toro Part No. 131-6828) and the angle-indicator mount (Toro Part No. 131-6829) to check the angle that your grinder produces and then correct for any grinder inaccuracy.

1. Place the angle indicator on the bottom side of the bedknife as shown in Figure 30.

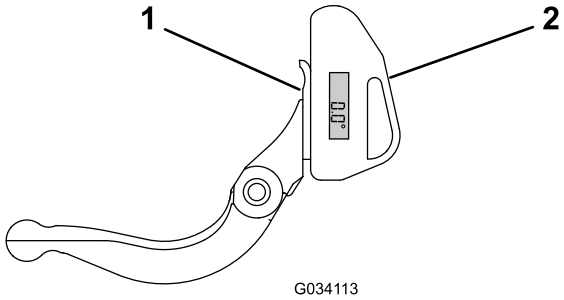

g034113

Figure 30

1. Bedknife (vertical)
2. Angle indicator

2. Press the Alt Zero button on the angle indicator.
3. Place the angle-indicator mount on the edge of the bedknife so that the edge of the magnet mates with the edge of the bedknife (Figure 31).

   Note: The digital display should be visible from the same side during this step as it was in step 1.

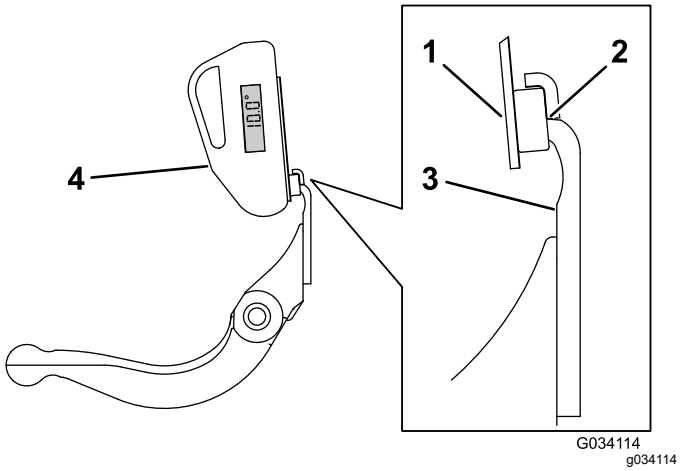

g034114

Figure 31

1. Angle-indicator mount
2. Edge of the magnet mated with the edge of the bedknife
3. Bedknife
4. Angle indicator

4. Place the angle indicator on the mount as shown in Figure 31.

   Note: This is the angle that your grinder produces, and should be within 2° of the recommended top grind angle.

Installing the Bedbar/Bedknife Assembly

1. Install the bedbar/bedknife assembly, positioning the mounting ears between the washer and bedbar-adjusting screw.

   Important: **Center the DPA adjusters in the bedbar ears as shown in Figure 32.**

   If DPA adjusters are installed against the bedbar ears, this may negatively affect the bedknife-to-reel contact.

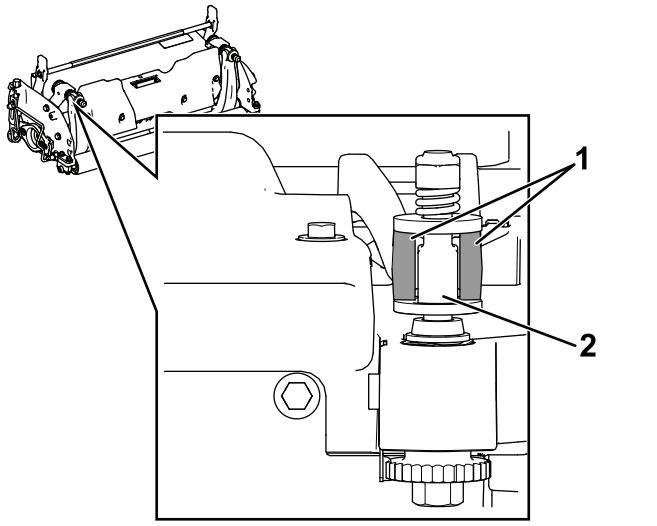

g512172

Figure 32

1. Bedbar ears
2. DPA adjuster

2. Secure the bedbar to each side plate with the bedbar bolts (nuts on bolts) and the 3 washers (6 total).
3. Position a nylon washer on each side of the side-plate boss. Place a steel washer outside each of the nylon washers (Figure 25).
4. Torque the bedbar bolts to 37 to 45 N·m (27 to 33 ft-lb).
5. Slowly tighten the bedbar locknuts until the outer steel washers just rotate by hand.

   Important: **Do not overtighten the locknuts or they will deflect the side plates.**

   Note: The nylon washer between the bedbar and side plate will have a small gap.
6. Tighten the spring tension nut until the spring is collapsed, then back off 1/2 turn (Figure 33).

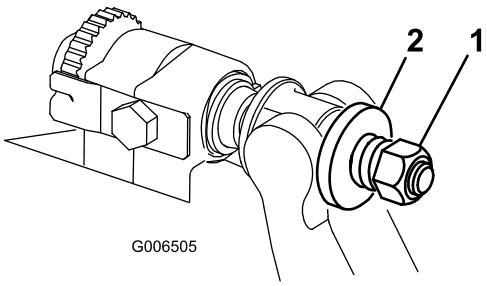

g006505

Figure 33

1. Spring tension nut
2. Spring

Reel Specifications

Relief-Grinding the Reel

The new reel has a land width of 1.3 to 1.5 mm (0.050 to 0.060 inch) and a 30° relief grind.

When the land width gets larger than 3 mm (0.120 inch) wide, do the following:

1. Apply a 30° relief grind on all reel blades until the land width is 1.3 mm (0.050 inch) wide (Figure 34 and Figure 35).

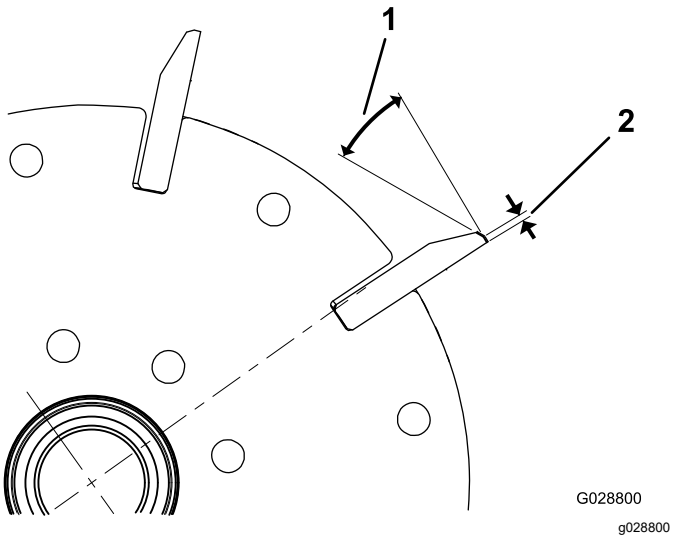

Figure 34
Radial Reels

1. 30°
2. 1.3 mm (0.050 inch)

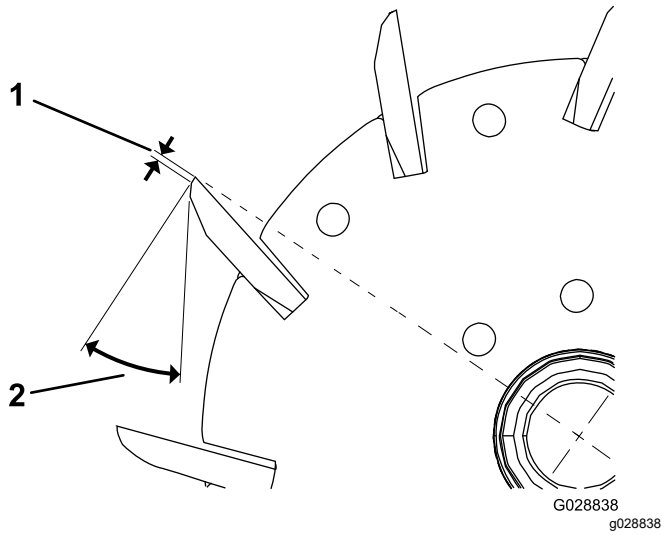

Figure 35
Forward Swept Reels

1. 1.3 mm (0.050 inch)
2. 30°

2. Spin grind the reel to achieve <0.025 mm (0.001 inch) reel run-out.

Note: This causes the land width to grow slightly.

Note: To extend the longevity of the sharpness of the edge of the reel and the bedknife—after grinding the reel and/or the bedknife—check the reel to bedknife contact again after cutting 2 fairways, as any burrs will be removed, which may create improper reel to bedknife clearance and thus accelerate wear.

3. Using a diameter measuring tape, measure the outside diameter of the reel at both ends (Figure 36); the difference in outside diameter between the ends should be less than 0.010 inches (0.250 mm). If the difference is greater, grind to correct the difference.

Note: Outside diameter measuring tape is available from your authorized Toro distributor.

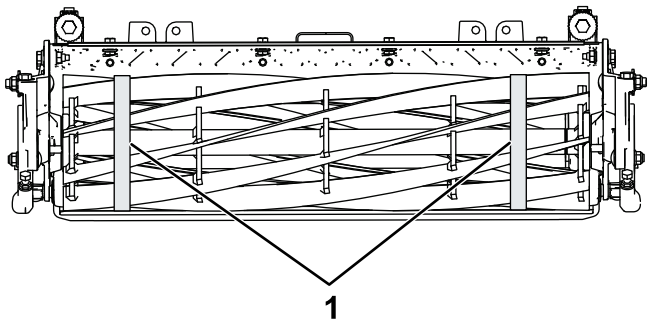

Figure 36

1. Measure the outside diameter of the reel between the 2 outermost internal supports at both ends and compare.

Servicing the HD Dual Point Adjusters (DPA)

1. Remove all parts (refer to the *Installation Instructions* for the HD DPA Kit and to Figure 37).
2. Apply anti-seize compound to the inside of the bushing area on cutting unit center frame (Figure 37).
3. Align the keys on flange bushings to the slots in the frame and install the bushings (Figure 37).
4. Install a wave washer onto the adjuster shaft and slide the adjuster shaft into the flange bushings in the frame of the cutting unit (Figure 37).
5. Secure the adjuster shaft with a flat washer and locknut (Figure 37).
6. Torque the locknut to 20 to 27 N·m (15 to 20 ft-lb).

   Note: The bedbar adjuster shaft has left-hand threads.

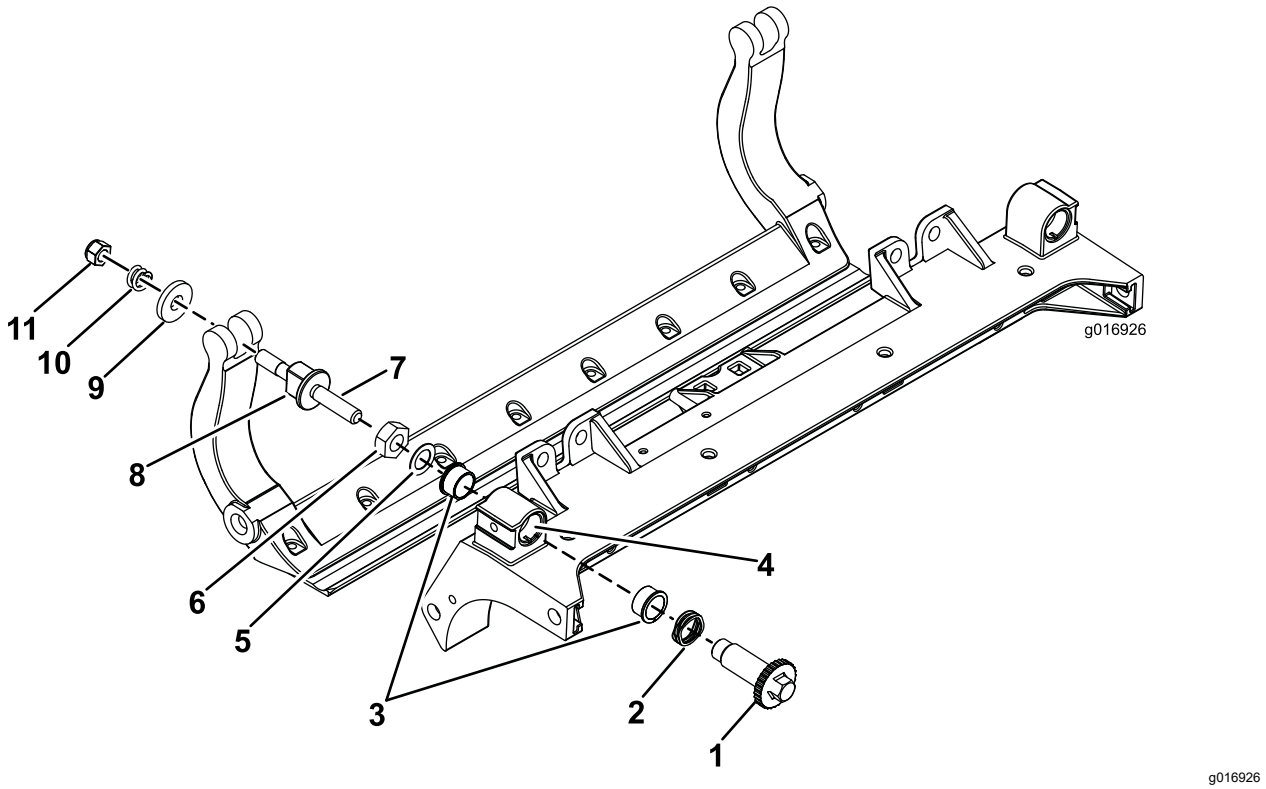

g016926

Figure 37

1. Shaft adjuster
2. Wave washer
3. Flange bushing
4. Apply anti-seize compound here.
5. Flat washer
6. Locknut
7. Apply anti-seize compound here.
8. Bedbar-adjuster screw
9. Hardened washer
10. Compression spring
11. Spring-tension nut

---

7. Apply anti-seize compound to the threads of the bedbar-adjuster screw that fit into the adjuster shaft.
8. Thread the bedbar-adjuster screw into the adjuster shaft.
9. Loosely install the hardened washer, spring, and spring tension nut onto the adjuster screw.
10. Install the bedbar, positioning the mounting ears between the washer and the bedbar adjuster.
11. Secure the bedbar to each side plate with the bedbar bolts (nuts on bolts) and 6 washers.

    Note: Position a nylon washer on each side of the side-plate boss.
12. Place a steel washer outside each of the nylon washers (Figure 37).
13. Torque the bedbar bolts to 37 to 45 N·m (27 to 33 ft-lb).
14. Tighten the locknuts until the outside steel washer stops rotating and end play is removed but do not overtighten or deflect the side plates.

    Note: The washers on the inside may have a gap (Figure 37).
15. Tighten the nut on each bedbar-adjuster assembly until the compression spring is fully compressed, then loosen the nut 1/2 turn (Figure 37).

16. Repeat this procedure on the other end of the cutting unit.
17. Adjust the bedknife to the reel; refer to Adjusting the Bedknife to the Reel (page 8).

Servicing the Roller

The Roller Rebuild Kit (Part No. 114-5430) and the Roller Rebuild Tool Kit (Part No. 115-0803) (Figure 38) are available for servicing the roller. The Roller Rebuild Kit includes all the bearings, bearing nuts, inner seals, and outer seals to rebuild a roller. The Roller Rebuild Tool Kit includes all the tools and the installation instructions required to rebuild a roller with the roller rebuild kit. Refer to your parts catalog or contact your authorized Toro distributor for assistance.

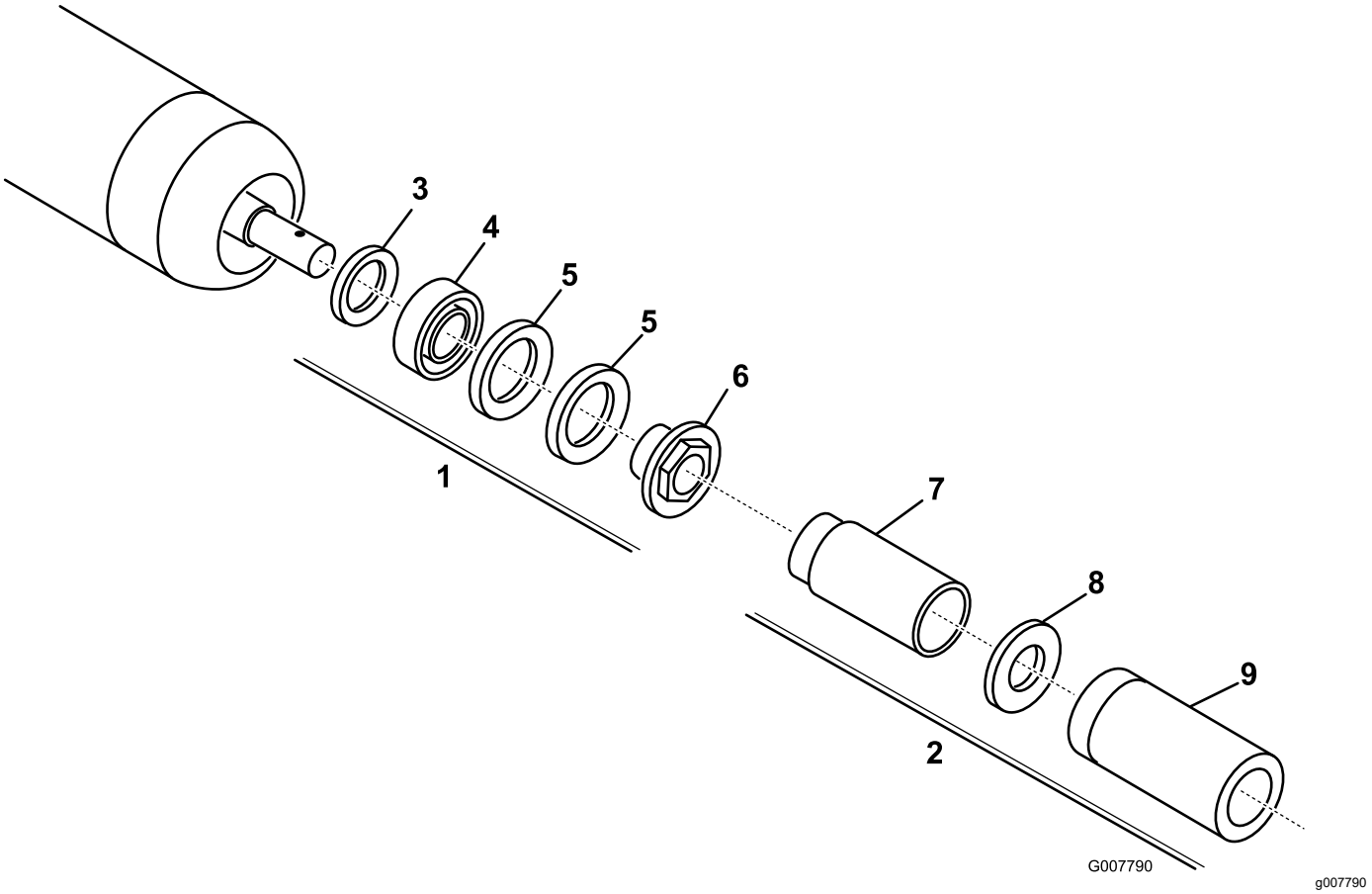

Figure 38

1. Roller Rebuild Kit (Part No. 114-5430)
2. Roller Rebuild Tool kit (Part No. 115-0803)
3. Inner seal
4. Bearing
5. Outer seal
6. Bearing nut
7. Inner seal tool
8. Washer
9. Bearing/outer-seal tool

Notes:

Declaration of Incorporation

The Toro Company, 8111 Lyndale Ave. South, Bloomington, MN, USA declares that the following unit(s) conform(s) to the directives listed, when installed in accordance with the accompanying instructions onto certain Toro models as indicated on the relevant Declarations of Conformity.

Model No.	Serial No.	Product Description	Invoice Description	General Description	Directive
03638	405700000 and Up	8-Blade Radial Reel DPA Cutting Unit with 7in Reel	7-IN, 8 BLADE ES (RR) DPA CUTTING UNIT	Cutting Unit	2006/42/EC
03639	405700000 and Up	8-Blade Forward Swept Reel DPA Cutting Unit with 7in Reel	7-INCH, 8-BLADE ES (FSR) DPA CUTTING UNIT	Cutting Unit	2006/42/EC
03641	405800000 and Up	11-Blade Forward Swept Reel DPA Cutting Unit with 7in Reel	7-INCH, 11-BLADE ES (FSR) DPA CUTTING UNIT	Cutting Unit	2006/42/EC
03643	400000000 and Up	11-Blade Radial Reel DPA Cutting Unit with 7in Reel	7-IN, 11 BLADE ES (RR) DPA CUTTING UNIT	Cutting Unit	2006/42/EC

Relevant technical documentation has been compiled as required per Part B of Annex VII of 2006/42/EC.

We will undertake to transmit, in response to requests by national authorities, relevant information on this partly completed machinery. The method of transmission shall be electronic transmittal.

This machinery shall not be put into service until incorporated into approved Toro models as indicated on the associated Declaration of Conformity and in accordance with all instructions, whereby it can be declared in conformity with all relevant Directives.

Certified:



Tom Langworthy
Engineering Director
8111 Lyndale Ave. South
Bloomington, MN 55420, USA
September 19, 2022

Authorized Representative:

Marcel Dutrieux
Manager European Product Integrity
Toro Europe NV
Nijverheidsstraat 5
2260 Oevel
Belgium

UK Declaration of Incorporation

The Toro Company, 8111 Lyndale Ave. South, Bloomington, MN, USA declares that the following unit(s) conform(s) to the directives listed, when installed in accordance with the accompanying instructions onto certain Toro models as indicated on the relevant Declarations of Conformity.

Model No.	Serial No.	Product Description	Invoice Description	General Description	Regulation
03638	405700000 and Up	8-Blade Radial Reel DPA Cutting Unit with 7in Reel	7-IN, 8 BLADE ES (RR) DPA CUTTING UNIT	Cutting Unit	S.I. 2008 No. 1597
03639	405700000 and Up	8-Blade Forward Swept Reel DPA Cutting Unit with 7in Reel	7-INCH, 8-BLADE ES (FSR) DPA CUTTING UNIT	Cutting Unit	S.I. 2008 No. 1597
03641	405800000 and Up	11-Blade Forward Swept Reel DPA Cutting Unit with 7in Reel	7-INCH, 11-BLADE ES (FSR) DPA CUTTING UNIT	Cutting Unit	S.I. 2008 No. 1597
03643	400000000 and Up	11-Blade Radial Reel DPA Cutting Unit with 7in Reel	7-IN, 11 BLADE ES (RR) DPA CUTTING UNIT	Cutting Unit	S.I. 2008 No. 1597

Relevant technical documentation has been compiled as required per Schedule 10 of S.I. 2008 No. 1597.

We will undertake to transmit, in response to requests by national authorities, relevant information on this partly completed machinery. The method of transmission shall be electronic transmittal.

This machinery shall not be put into service until incorporated into approved Toro models as indicated on the associated Declaration of Conformity and in accordance with all instructions, whereby it can be declared in conformity with all relevant Regulations.

This declaration has been issued under the sole responsibility of the manufacturer.
The object of the declaration is in conformity with relevant UK legislation.



Tom Langworthy
Engineering Director
8111 Lyndale Ave. South
Bloomington, MN 55420, USA
September 19, 2022

Authorized Representative:

Marcel Dutrieux
Manager European Product Integrity
Toro U.K. Limited
Spellbrook Lane West
Bishop's Stortford
CM23 4BU
United Kingdom

The Toro Warranty

Two-Year or 1,500 Hours Limited Warranty

Conditions and Products Covered

The Toro Company and its affiliate, Toro Warranty Company, pursuant to an agreement between them, jointly warrant your Toro Commercial product (“Product”) to be free from defects in materials or workmanship for 2 years or 1,500 operational hours*, whichever occurs first. This warranty is applicable to all products with the exception of Aerators (refer to separate warranty statements for these products). Where a warrantable condition exists, we will repair the Product at no cost to you including diagnostics, labor, parts, and transportation. This warranty begins on the date the Product is delivered to the original retail purchaser.
* Product equipped with an hour meter.

Instructions for Obtaining Warranty Service

You are responsible for notifying the Commercial Products Distributor or Authorized Commercial Products Dealer from whom you purchased the Product as soon as you believe a warrantable condition exists. If you need help locating a Commercial Products Distributor or Authorized Dealer, or if you have questions regarding your warranty rights or responsibilities, you may contact us at:

Toro Commercial Products Service Department
Toro Warranty Company
8111 Lyndale Avenue South
Bloomington, MN 55420-1196

952–888–8801 or 800–952–2740
E-mail: commercial.warranty@toro.com

Owner Responsibilities

As the product owner, you are responsible for required maintenance and adjustments stated in your *Operator's Manual*. Repairs for product issues caused by failure to perform required maintenance and adjustments are not covered under this warranty.

Items and Conditions Not Covered

Not all product failures or malfunctions that occur during the warranty period are defects in materials or workmanship. This warranty does not cover the following:

- Product failures which result from the use of non-Toro replacement parts, or from installation and use of add-on, or modified non-Toro branded accessories and products.
- Product failures which result from failure to perform recommended maintenance and/or adjustments.
- Product failures which result from operating the Product in an abusive, negligent, or reckless manner.
- Parts consumed through use that are not defective. Examples of parts which are consumed, or used up, during normal Product operation include, but are not limited to, brake pads and linings, clutch linings, blades, reels, rollers and bearings (sealed or greasable), bed knives, spark plugs, castor wheels and bearings, tires, filters, belts, and certain sprayer components such as diaphragms, nozzles, and check valves.
- Failures caused by outside influence, including, but not limited to, weather, storage practices, contamination, use of unapproved fuels, coolants, lubricants, additives, fertilizers, water, or chemicals.
- Failure or performance issues due to the use of fuels (e.g. gasoline, diesel, or biodiesel) that do not conform to their respective industry standards.
- Normal noise, vibration, wear and tear, and deterioration. Normal “wear and tear” includes, but is not limited to, damage to seats due to wear or abrasion, worn painted surfaces, scratched decals or windows.

Parts

Parts scheduled for replacement as required maintenance are warranted for the period of time up to the scheduled replacement time for that part. Parts replaced under this warranty are covered for the duration of the original product warranty and become the property of Toro. Toro will make the final decision whether to repair any existing part or assembly or replace it. Toro may use remanufactured parts for warranty repairs.

Deep Cycle and Lithium-Ion Battery Warranty

Deep cycle and Lithium-Ion batteries have a specified total number of kilowatt-hours they can deliver during their lifetime. Operating, recharging, and maintenance techniques can extend or reduce total battery life. As the batteries in this product are consumed, the amount of useful work between charging intervals will slowly decrease until the battery is completely worn out. Replacement of worn out batteries, due to normal consumption, is the responsibility of the product owner. Note: (Lithium-Ion battery only): Pro-rated after 2 years. Refer to the battery warranty for additional information.

Lifetime Crankshaft Warranty (ProStripe 02657 Model Only)

The Prostripe which is fitted with a genuine Toro Friction Disc and Crank-Safe Blade Brake Clutch (integrated Blade Brake Clutch (BBC) + Friction Disc assembly) as original equipment and used by the original purchaser in accordance with recommended operating and maintenance procedures, are covered by a Lifetime Warranty against engine crankshaft bending. Machines fitted with friction washers, Blade Brake Clutch (BBC) units and other such devices are not covered by the Lifetime Crankshaft Warranty.

Maintenance is at Owner’s Expense

Engine tune-up, lubrication, cleaning and polishing, replacement of filters, coolant, and completing recommended maintenance are some of the normal services Toro products require that are at the owner’s expense.

General Conditions

Repair by an Authorized Toro Distributor or Dealer is your sole remedy under this warranty.

Neither The Toro Company nor Toro Warranty Company is liable for indirect, incidental or consequential damages in connection with the use of the Toro Products covered by this warranty, including any cost or expense of providing substitute equipment or service during reasonable periods of malfunction or non-use pending completion of repairs under this warranty. Except for the Emissions warranty referenced below, if applicable, there is no other express warranty. All implied warranties of merchantability and fitness for use are limited to the duration of this express warranty.

Some states do not allow exclusions of incidental or consequential damages, or limitations on how long an implied warranty lasts, so the above exclusions and limitations may not apply to you. This warranty gives you specific legal rights, and you may also have other rights which vary from state to state.

Note Regarding Emissions Warranty

The Emissions Control System on your Product may be covered by a separate warranty meeting requirements established by the U.S. Environmental Protection Agency (EPA) and/or the California Air Resources Board (CARB). The hour limitations set forth above do not apply to the Emissions Control System Warranty. Refer to the Engine Emission Control Warranty Statement supplied with your product or contained in the engine manufacturer’s documentation.

Countries Other than the United States or Canada

Customers who have purchased Toro products exported from the United States or Canada should contact their Toro Distributor (Dealer) to obtain guarantee policies for your country, province, or state. If for any reason you are dissatisfied with your Distributor's service or have difficulty obtaining guarantee information, contact your Authorized Toro Service Center.



Count on it.