Form Number 3350-814

62in Guardian® Recycler Mower
Groundsmaster® 200 Series

Model No. 30569 - 240000001 and up.

Parts Catalog

Ordering Replacement Parts

To order replacement parts, please supply the part number, the quantity, and the description of each part desired.

Understanding Reference Numbers

Each Identified part in an illustration has a reference number. The reference number for a part also appears in the parts list, along with other information about the part.

This catalog uses two special reference number formats, one to indicate parts in a service assembly and another to indicate the quantity of a given part in an illustration.

Service Assembly Reference Numbers

Parts in service assemblies have reference numbers in the form a:b. The a represents the reference number of the entire service assembly and the b represents a sequential number unique to each part within the service assembly.

For example, a wheel assembly might be identified by reference number 6, the tire by 6:1, the valve by 6:2, and the wheel by 6:3. When you order the assembly identified by reference number 6, you receive all parts identified by reference numbers 6:1, 6:2, and 6:3. However, you may also order any part individually. Reference numbers of this type appear in illustrations and in part lists.

PROTOTYPE

Reference Numbers Indicating Quantity

In an illustration, if a reference number indicates more than one part, the reference number has the form nX y. The n represents the quantity of the part, the X is the multiplication symbol, and the y represents the reference number.

For example, in an illustration, the reference number 2X 37 means that two of the parts identified by reference number 37 are indicated.

©The Toro Company - 2004
All Rights Reserved

Part Description Abbreviations

Part descriptions in this catalog may include the following abbreviations.

AR. . . . . as required
ASM. . . . . assembly
CARR. . . . . carriage
DEG. . . . . degrees
FH. . . . . flat head
GA. . . . . gauge
HF. . . . . hex flange
HH. . . . . hex head
HHF. . . . . hex head flange
HHFTF. . . . . hex head flange thread forming
HJ. . . . . hex jam
HLH. . . . . hex lag head
HOC. . . . . height-of-cut
HS. . . . . hex
HSBH. . . . . hex socket button head
HSFH. . . . . hex socket flat head
HSH. . . . . hex socket head
HWH. . . . . hex washer head
HWHTF. . . . . hex washer head thread forming
HYD. . . . . hydraulic
INC. . . . . incorporated
LH. . . . . left hand
NI. . . . . nylon insert
PPH. . . . . phillips pan head
PTH. . . . . phillips truss head
PTO. . . . . power take off
RH. . . . . right hand
SFH. . . . . slotted fillister head
SHH. . . . . slotted hex head
SHWH. . . . . slotted hex washer head
SPH. . . . . slotted pan head
SQH. . . . . square head
SRH. . . . . slotted round head
STD. . . . . standard
TAP. . . . . self tapping
TTH. . . . . torx truss head
WH. . . . . wing head

Footnotes

❶ Not illustrated

❷ Not serviced separately

Contents

Description	Page
Housing and Idler Assembly	3
Carrier Frame Assembly	4
Cutting Chamber Assembly	6
Spindle and Blade Assembly	7
Gearbox Installation Assembly	8
Gear Box Assembly No. 106-4355	9
Cover Assembly	10
Counterbalance Manifold Installation Assembly	11
Counterbalance Manifold Assembly No. 92-5638	12

PROTOTYPE

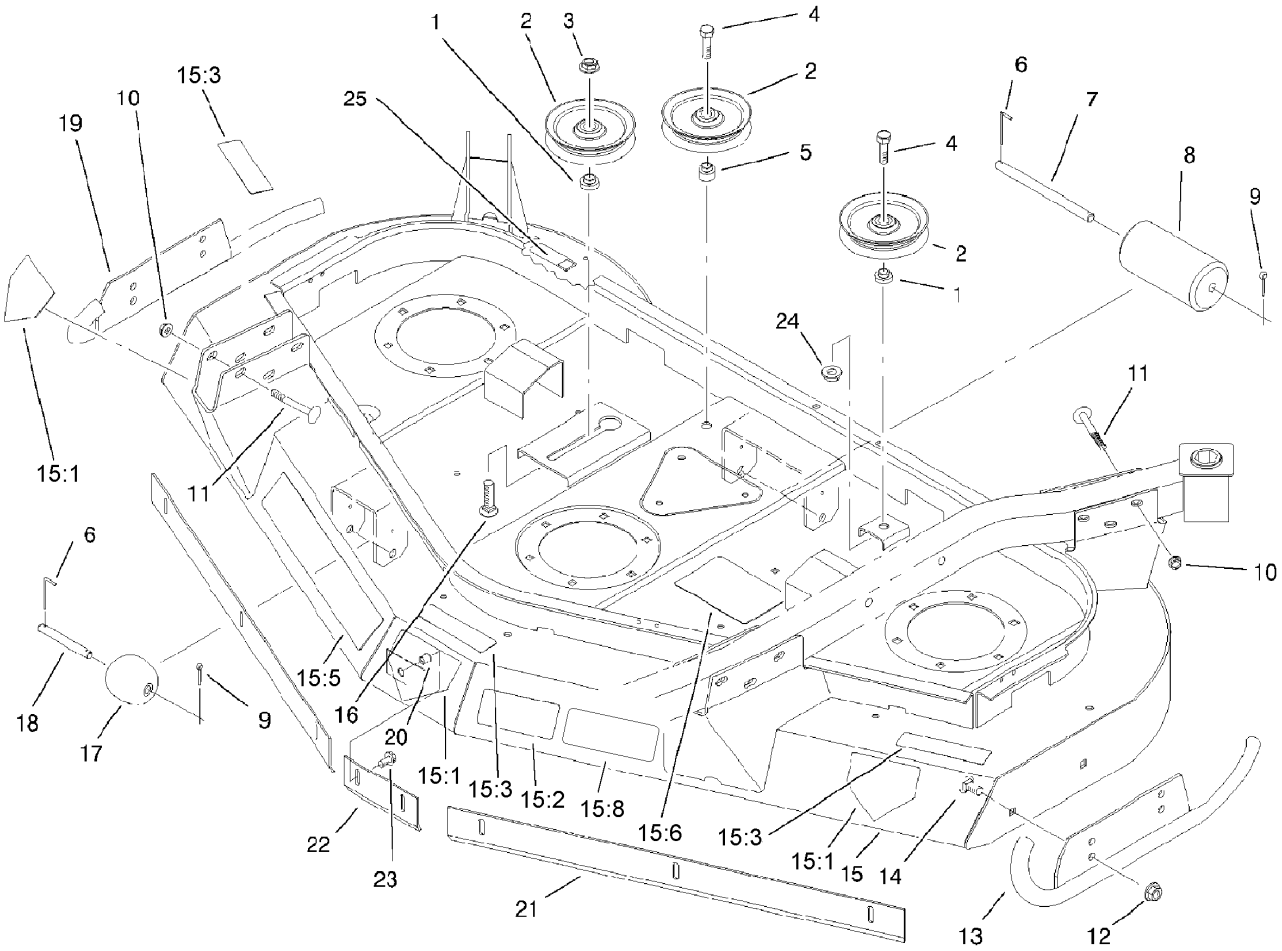

Housing and Idler Assembly

Ref	Part No.	Qty.	Description
1	69-6960	2	Spacer-Idler
2	63-1540-03	3	Pulley-Idler
3	3296-25	1	Nut-Lock, NI
4	325-6	2	Screw-HH
5	69-6970	1	Spacer-Idler, Flat
6	57-0690	3	Pin-Special
7	40-6400	1	Shaft-Roller
8	36-1740	1	Roller-Deck
9	3272-11	3	Pin-Cotter
10	32128-19	12	Nut-HF
11	3231-10	12	Screw-CARR
12	32128-21	4	Nut-HF
13	92-5589-01	1	LH Skid ASM
14	3231-1	4	Screw-CARR
15	92-5571	1	Deck ASM
15:1	106-6753	3	Decal-Danger, Ce
15:2	93-7818	1	Decal-Torque, Blade Bolt
15:3	100-6578	3	Decal-Danger
15:5	92-4088	1	Decal-Guardian 62
15:6	92-4092	1	Decal-Routing, Belt
15:8	105-9552	1	Decal-Warning
16	3233-30	1	Screw-CARR
17	29-4820	2	Roller
18	57-0680	2	Shaft-Roller

Ref	Part No.	Qty.	Description
19	92-5592-01	1	RH Skid ASM
20	32148-7	8	Insert-Nut
21	93-4388-01	2	Baffle-Side
22	93-4389-01	1	Baffle-Center
23	3234-5	8	Screw
24	32128-23	1	Nut-HF
25	104-0131	1	Decal-Ansi

PROTOTYPE

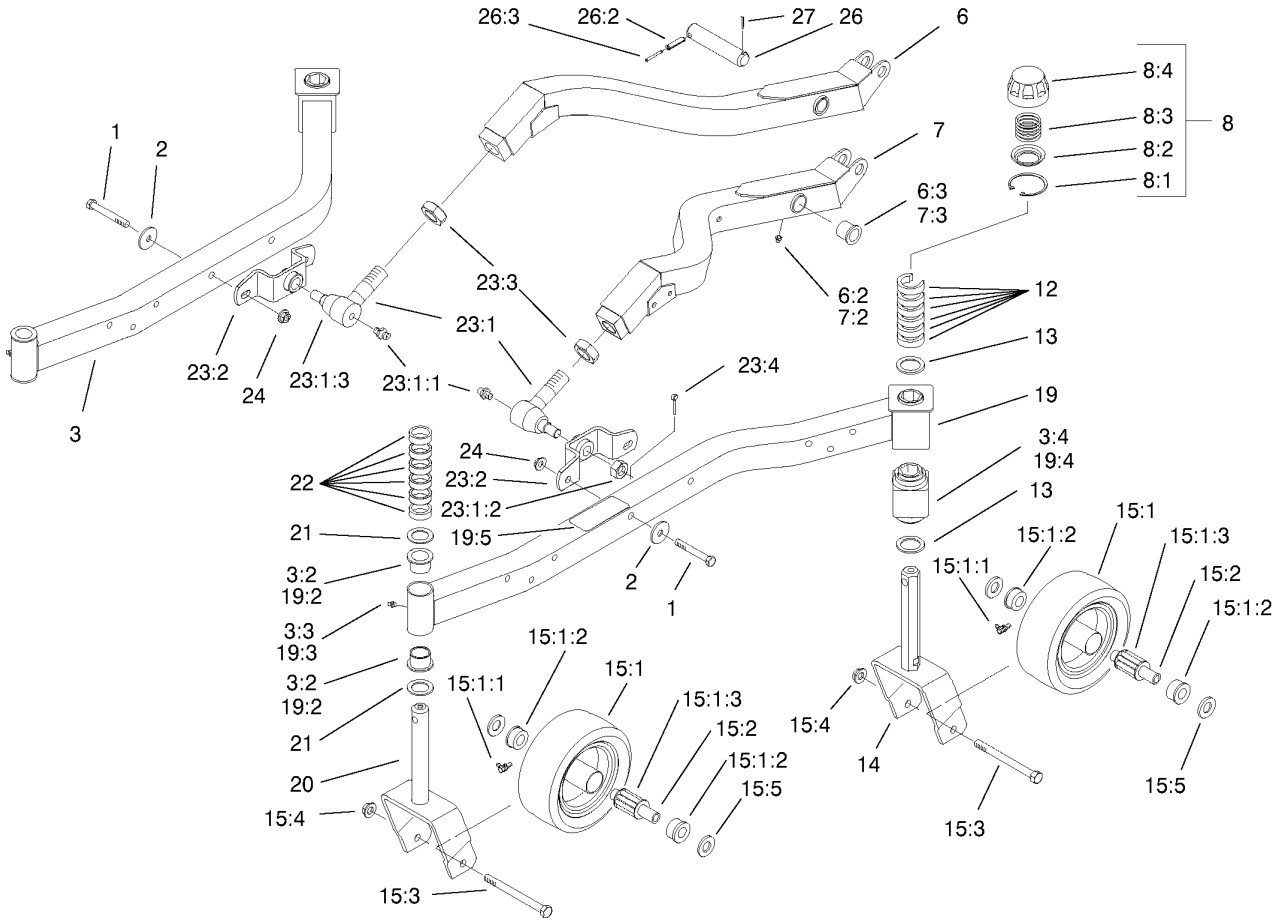

Carrier Frame Assembly

Ref	Part No.	Qty.	Description
1	324-12	4	Screw-HH
2	66-6480	4	Washer
3	92-5623	1	RH Castor Arm ASM
3:2	94-1291	2	Bushing
3:3	302-5	1	Fitting-Grease
3:4	93-8471	1	Bushing-Rubber, Square
6	99-1254	1	RH Lift Arm ASM
6:2	302-5	1	Fitting-Grease
6:3	256-268	2	Bushing
7	99-1257	1	LH Lift Arm ASM
7:2	302-5	1	Fitting-Grease
7:3	256-268	2	Bushing
8	92-8862	4	HOC Cap ASM
8:1	92-5581	1	Ring-Retaining
8:2	92-5583	1	Washer-Cap
8:3	92-5584	1	Spring-Compression
8:4	92-8861	1	Cap-HOC
12	92-8866	12	Spacer
13	92-1765	4	Washer-Thrust
14	92-5578-01	2	Fork-Castor, Rear
❶15	95-3076	1	Wheel Kit-Castor
15:1	85-5760	4	Castor Wheel ASM-8 In
15:1:1	302-40	1	Fitting-Grease
15:1:2	62-5580	2	Bearing-Outside

Ref	Part No.	Qty.	Description
15:1:3	83-4740	1	Bearing
15:2	62-4340	4	Spanner
15:3	325-22	4	Screw-HH
15:4	32128-23	4	Nut-HF
15:5	3256-6	8	Washer-Flat
19	92-5573	1	Castor Arm ASM-LH
19:2	94-1291	2	Bushing
19:3	302-5	1	Fitting-Grease
19:4	93-8471	1	Bushing-Rubber, Square
19:5	93-7826	1	Decal-HOC
20	98-7068-01	2	Castor Fork ASM
21	3-6781	4	Washer-Thrust
22	63-0070	12	Spacer
❷23		2	Balljoint ASM
23:1	86-8100	1	Joint-Ball
23:1:1	302-5	1	Fitting-Grease
23:1:2	32136-2	1	Nut-SHH
23:1:3	105-7835	1	Seal
23:2	98-7944-01	1	Mount-Balljoint
23:3	21-3000	1	Nut-Hj, Push Arm
23:4	3272-12	1	Pin-Cotter
24	32128-42	4	Nut-HF
26	98-2330	2	Pivot Pin ASM
26:2	32121-67	1	Pin-Roll

PROTOTYPE

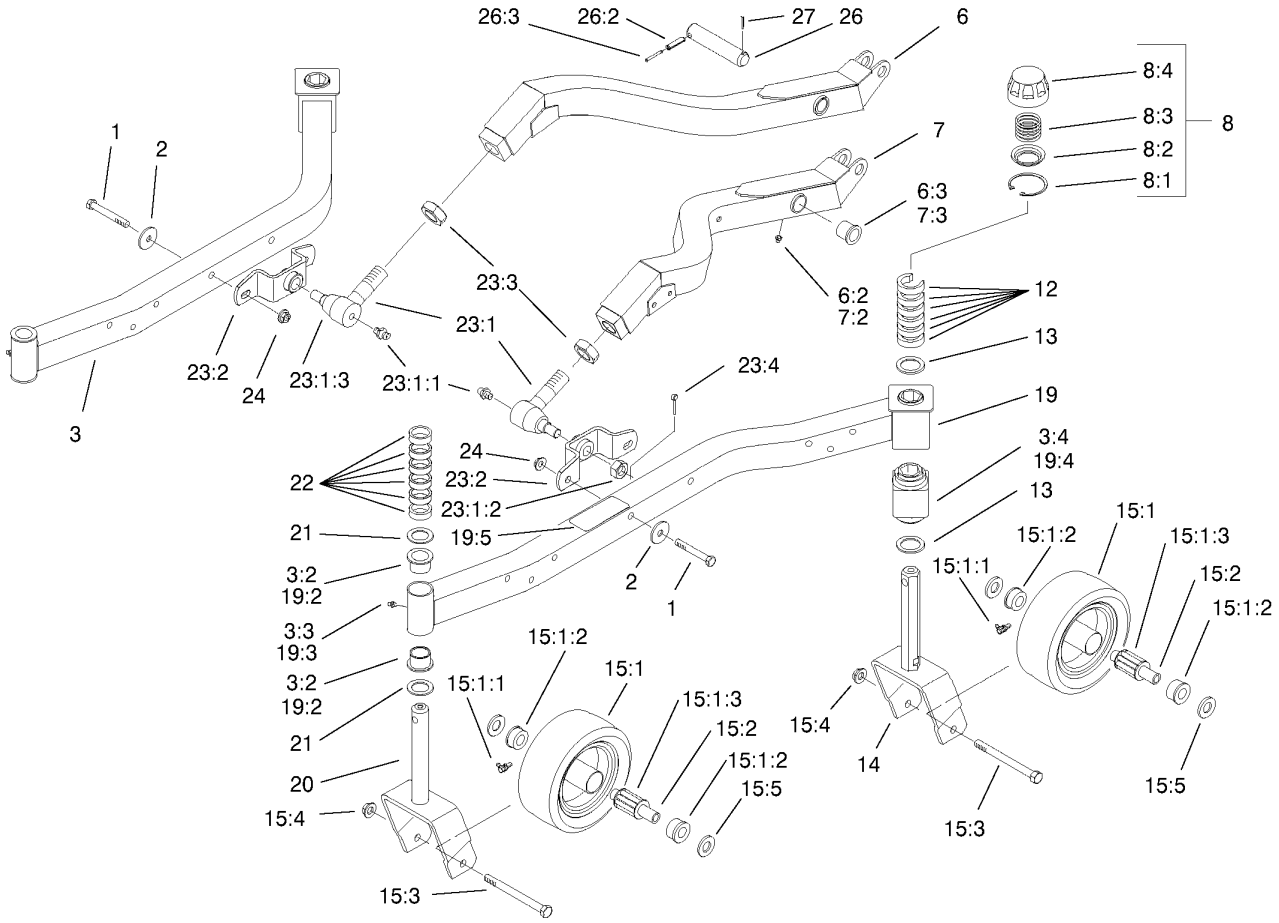

Carrier Frame Assembly (continued)

Ref	Part No.	Qty.	Description
26:3	32121-61	1	Pin-Roll
27	3272-19	2	Pin-Cotter

PROTOTYPE

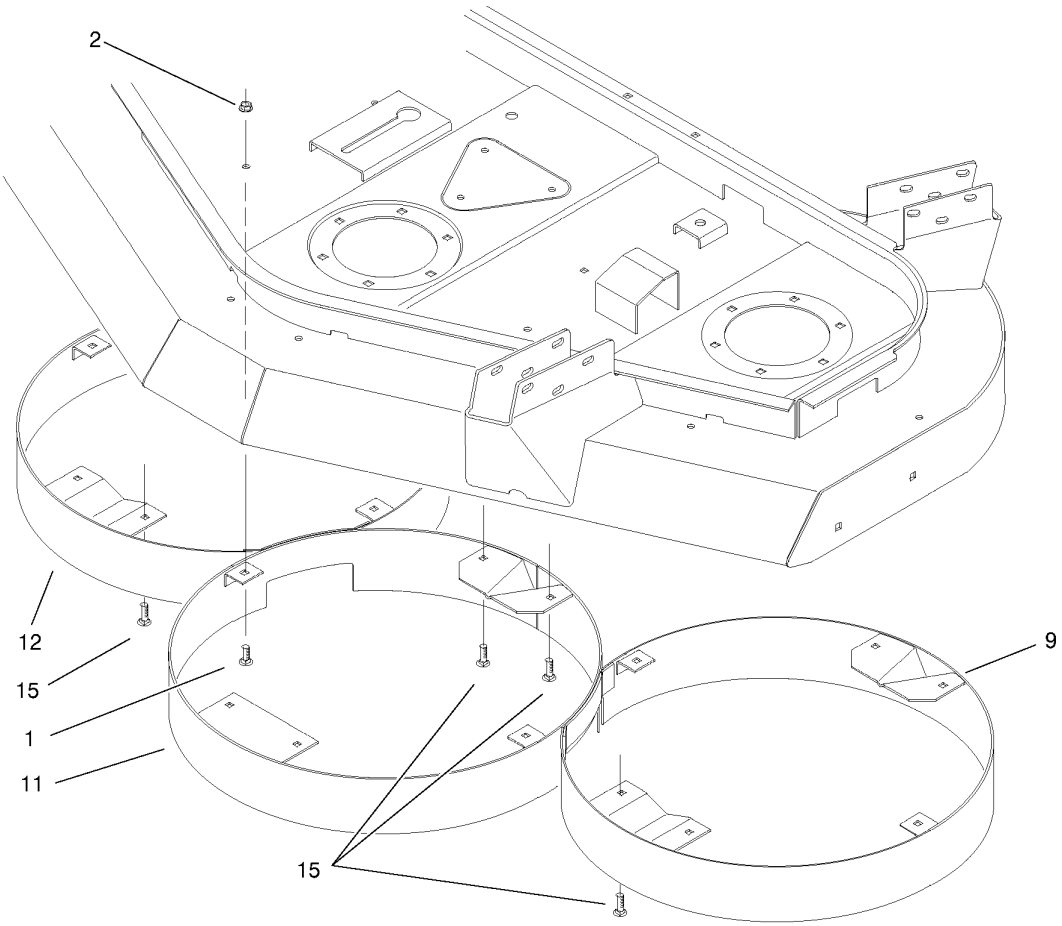

Cutting Chamber Assembly

Ref	Part No.	Qty.	Description
1	3230-18	14	Screw-CARR
2	32128-13	18	Nut-HF
9	92-5594-01	1	LH Chamber ASM
11	92-5600-01	1	Center Chamber ASM
12	92-5602-01	1	RH Chamber ASM
15	3230-23	4	Screw-CARR

PROTOTYPE

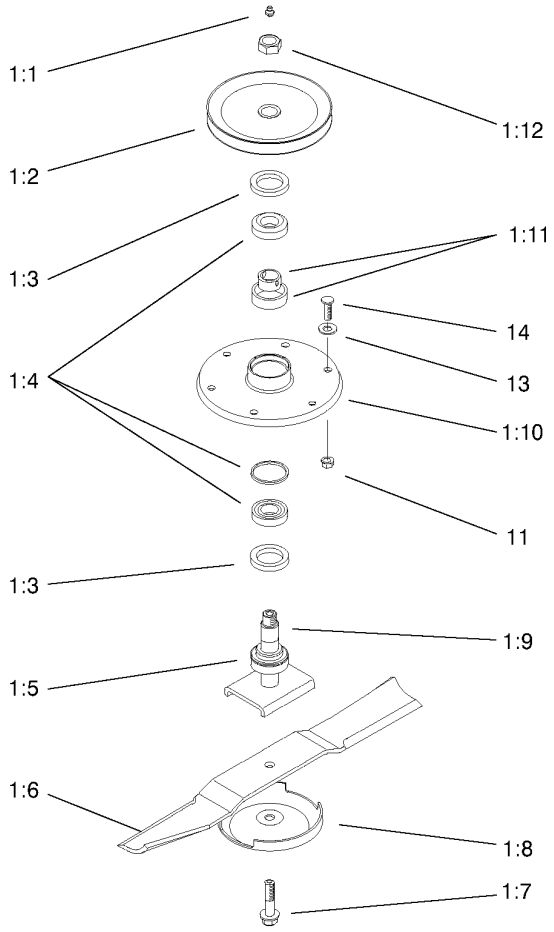

Spindle and Blade Assembly

Ref	Part No.	Qty.	Description
❷1		3	Spindle ASM
1:1	302-2	1	Fitting-Grease
1:2	92-5607-03	1	Pulley And Hub ASM
1:3	253-139	2	Seal-Oil
1:4	27-0960	1	Bearing ASM
1:5	92-5606	1	Spacer-Spindle
1:6	92-5608	1	Blade
1:7	92-5816	1	Bolt-Blade
1:8	72-9361	1	Cup-Scalp, Anti
1:9	92-5604	1	Spindle Shaft ASM
1:10	61-4160	1	Housing-Spindle
1:11	27-5970	1	Spacer-Set, Matched
1:12	32146-20	1	Nut-Jam
11	32128-21	18	Nut-HF
13	3256-24	2	Washer-Flat
14	3231-27	18	Screw-CARR
❶99	95-3081	1	Kit-Spindle

PROTOTYPE

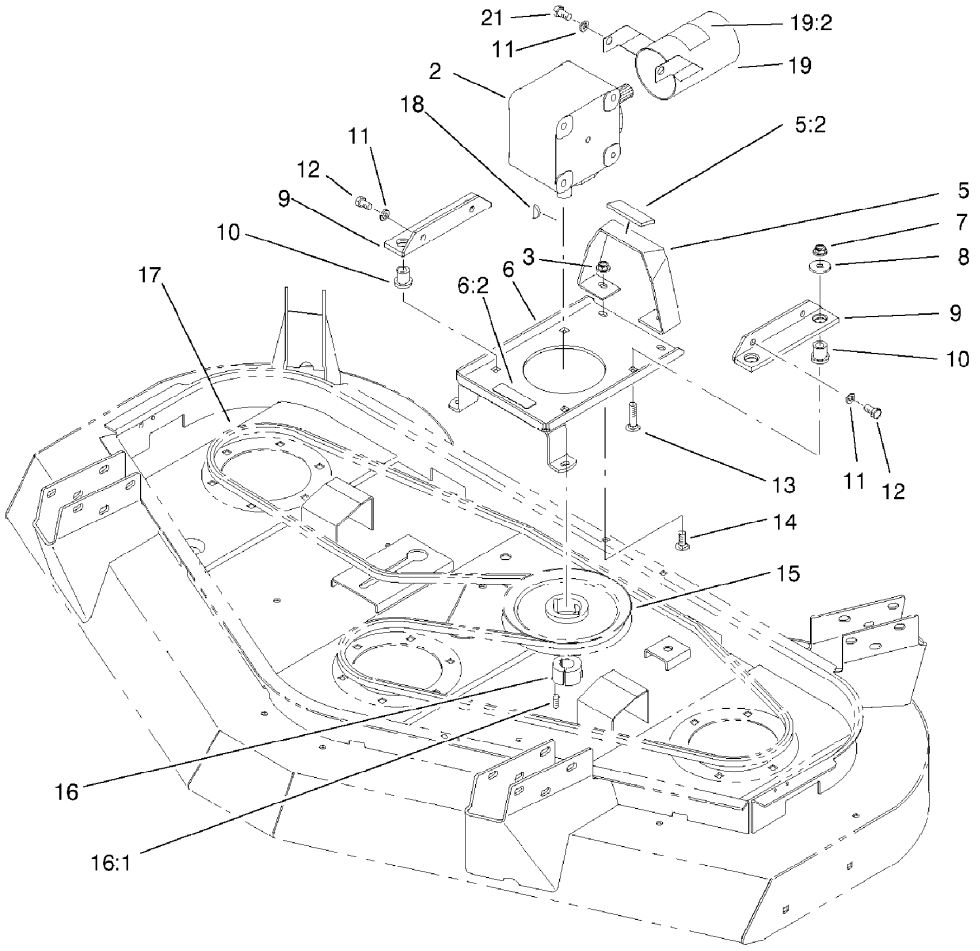

Gearbox Installation Assembly

Ref	Part No.	Qty.	Description
2	106-4355	1	Gearbox ASM
3	32128-13	4	Nut-HF
5	92-5644	1	Gearbox Stand ASM
5:2	74-0342	1	Cushion-Rubber
6	92-5609	1	Gearbox Plate ASM
6:2	93-6697	1	Decal-Lube
7	32128-21	4	Nut-HF
8	63-8410	4	Washer
9	68-8560-03	2	Bracket-Gearbox
10	63-9750	4	Mount
11	3253-21	6	Washer-Lock
12	323-4	4	Screw-HH
13	3231-26	4	Screw-CARR
14	3230-22	4	Screw-CARR
15	85-5860-03	1	Pulley-Gearbox
16	23-1640	1	Bushing-Taperlock
16:1	3247-4	2	Screw-Set
17	92-5588	1	V-Belt
18	3257-5	1	Key-Woodruff
19	107-2904	1	PTO Guard ASM
19:2	107-2915	1	Decal-Danger
21	323-2	2	Screw-HH
❶99	95-3073	1	Kit-Blade And Belt

PROTOTYPE

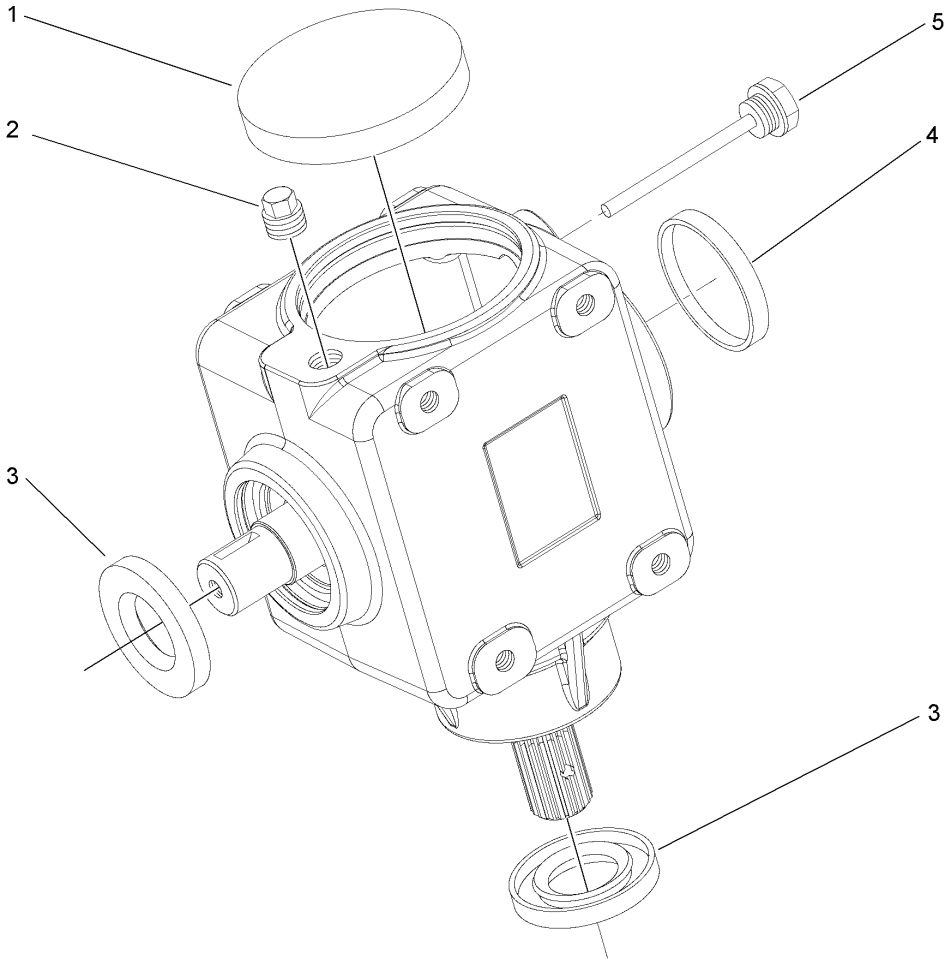

Gear Box Assembly No. 106-4355

Ref	Part No.	Qty.	Description
1	107-2932	1	Cap-Oil
2	107-2933	1	Plug
3	107-2934	2	Seal-Oil
4	107-2935	1	Cap-Oil
5	107-2936	1	Plug-Filler, Dipstick

PROTOTYPE

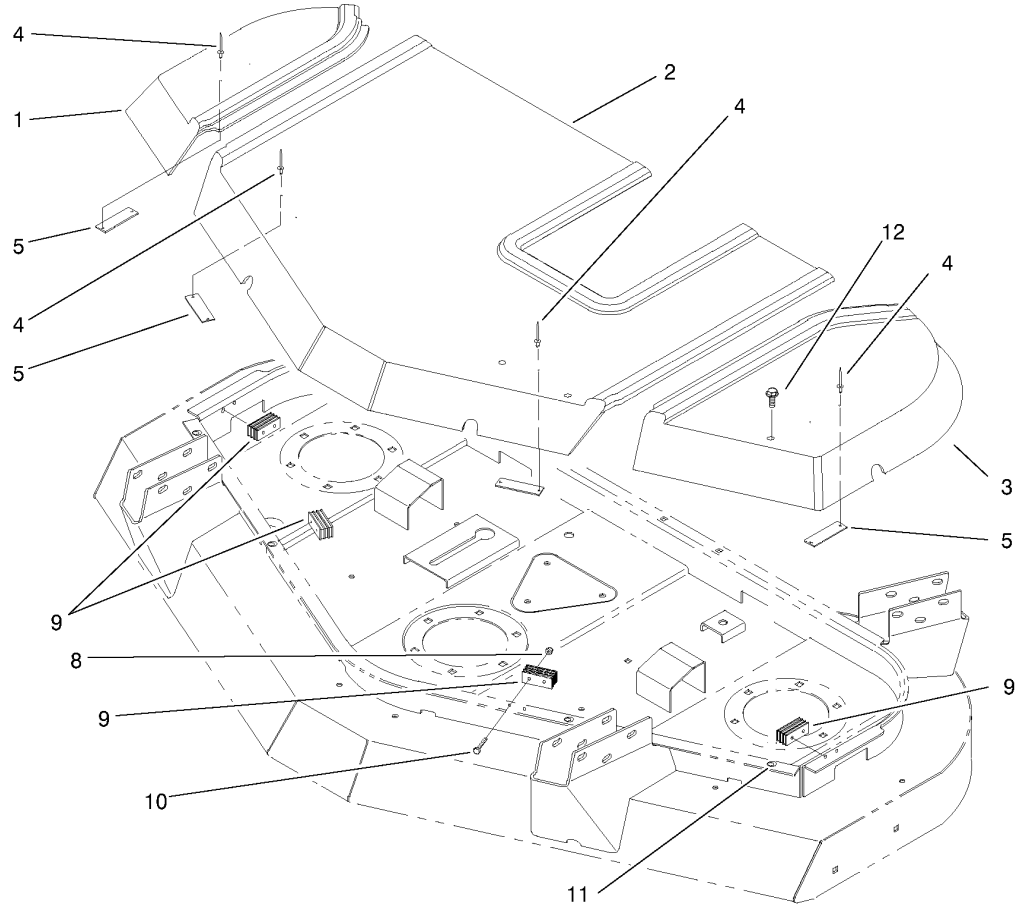

Cover Assembly

Ref	Part No.	Qty.	Description
1	92-5619	1	Cover-RH
2	92-5620	1	Cover-Center
3	92-5618	1	Cover-LH
4	3269-25	8	Rivet-Pop
5	69-6870	4	Plate-Magnet
8	3296-2	8	Nut-Lock
9	69-6260	4	Magnet
10	32105-1	8	Screw-SHH
11	32148-7	4	Insert-Nut
12	3234-5	4	Screw

PROTOTYPE

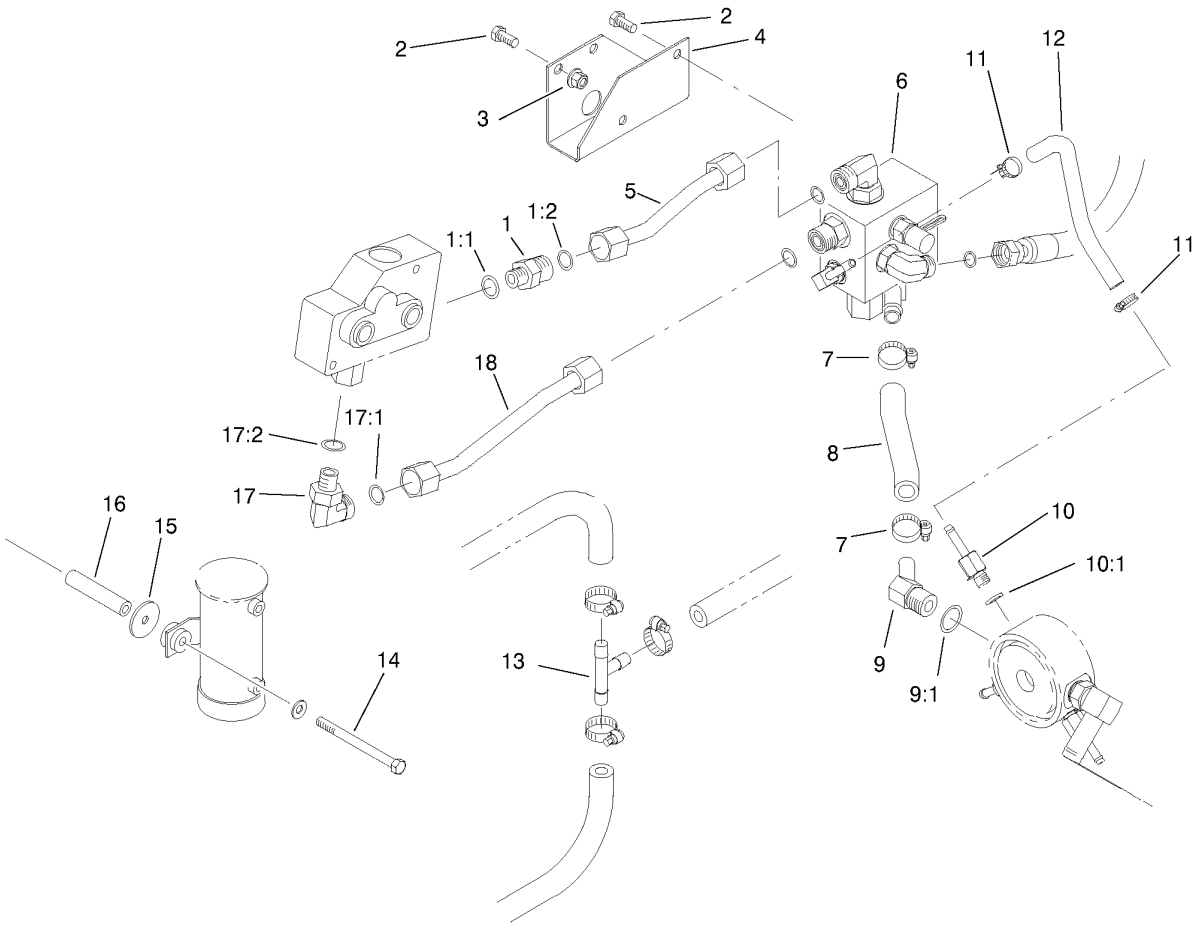

Counterbalance Manifold Installation Assembly

Ref	Part No.	Qty.	Description
1	340-5	1	Fitting-Straight
1:1	237-42	1	O-Ring
1:2	237-30	1	O-Ring
2	3234-14	4	Screw-HHF
3	32128-13	2	Nut-HF
4	92-5635-01	1	Bracket-Manifold
5	92-5636	1	Tube ASM
6	92-5638	1	Manifold ASM
7	2412-36	2	Clamp-Hose
8	92-5639	1	Hose-Hydrualic
9	354-126	1	Fitting-Hyd, 45 DEG
9:1	237-79	1	O-Ring
10	92-5512	1	Fitting-Hose, Barbed
10:1	237-78	1	O-Ring
11	2412-108	2	Clamp-Worm
12	65-2970	1	Hose-Hydraulic
13	354-107	1	Fitting-Hyd, Tee
14	321-24	2	Screw-HH
15	3256-55	2	Washer-Flat
16	92-5634	2	Tube
17	340-99	1	Fitting-HYD-90
17:1	237-30	1	O-Ring
17:2	237-42	1	O-Ring
18	92-5637	1	Tube ASM

Ref	Part No.	Qty.	Description
❶99	92-5640	1	Fitting-Hyd, Cross

PROTOTYPE

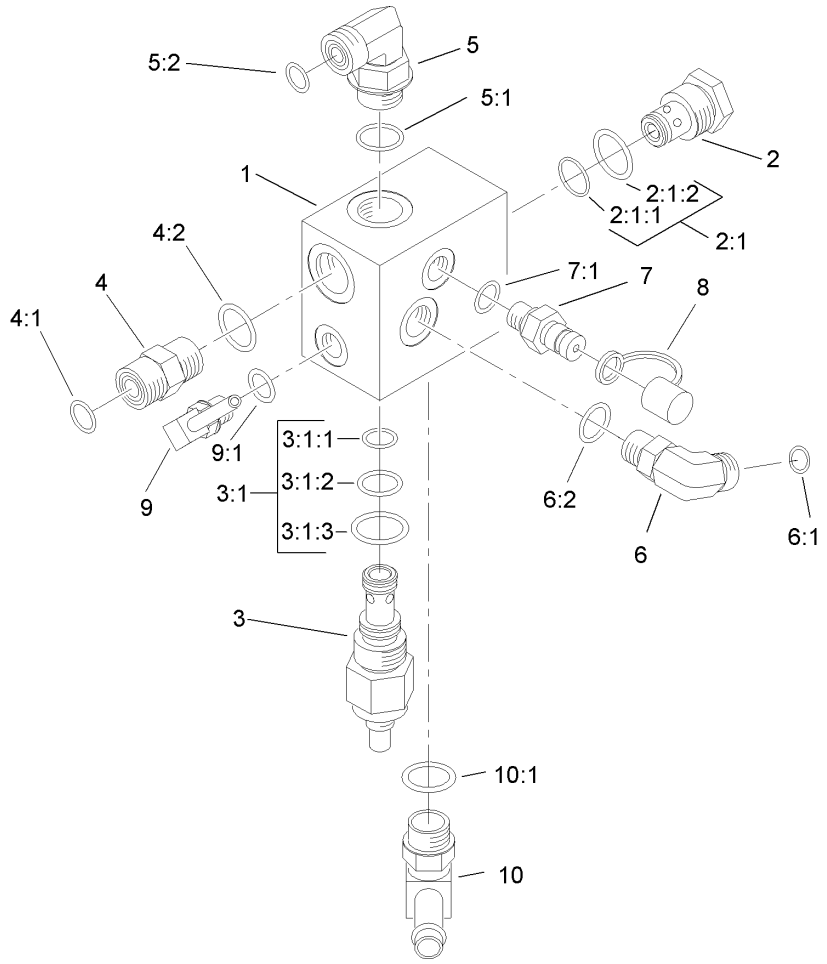

Counterbalance Manifold Assembly No. 92-5638

Ref	Part No.	Qty.	Description
❷1		1	Manifold Block
2	92-5645	1	Cartridge-Relief
2:1	95-5645	1	Seal Kit
❷2:1:1		1	O-Ring
❷2:1:2		1	O-Ring
3	92-5646	1	Cartridge-Logic
3:1	69-4240	1	Seal Kit
❷3:1:1		1	O-Ring
❷3:1:2		1	O-Ring
❷3:1:3		1	O-Ring
4	340-4	1	Fitting-Hyd, Sraight
4:1	237-30	1	O-Ring
4:2	237-79	1	O-Ring
5	340-98	1	Fitting-Hyd, 90 DEG
5:1	237-79	1	O-Ring
5:2	237-30	1	O-Ring
6	340-77	1	Fitting-Hyd, 90 DEG
6:1	237-22	1	O-Ring
6:2	237-42	1	O-Ring
7	354-77	1	Fitting-Quick
7:1	237-78	1	O-Ring
8	353-947	1	Cap-Dust, Rubber
9	304-99	1	Stem-Hose
9:1	237-78	1	O-Ring

Ref	Part No.	Qty.	Description
10	354-120	1	Fitting-Hyd, 90 DEG
10:1	237-79	1	O-Ring

PROTOTYPE

NOTES

PROTOTYPE

NOTES

PROTOTYPE

NOTES

PROTOTYPE



PROTOTYPE