Ultra Sonic Boom Finishing Kit

Multi Pro 5800 Turf Sprayer

Model No. 164-1050

Installation Instructions

Install the finishing kit along with the Sonic Boom Leveling Kit. Start with the Finishing Kit instructions first.

1 Preparing the Machine

Refer to your machine *Operator's Manual* for all safety information.

1. Park the machine on a level surface.
2. Engage the parking brake.
3. Shut off the engine and remove the key.

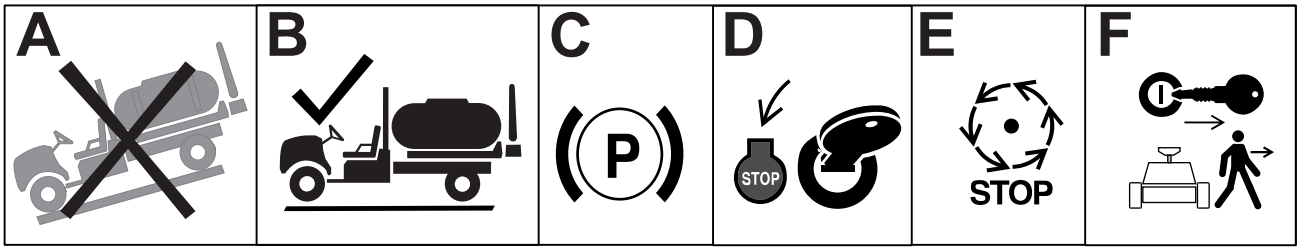

G036361s

4. Disconnect the battery.

© 2025—The Toro® Company
8111 Lyndale Ave So
Bloomington, MN 55044

Register at
www.Toro.com

Original Instructions (EN)
Printed in the USA
All rights reserved

3478-167

2 Installing the Manifold Bracket

Parts Required

1	Manifold bracket

1. Disconnect the wiring harness from the hydraulic manifold block.
2. Label all the hoses connected to the hydraulic manifold block and disconnect them from the block.

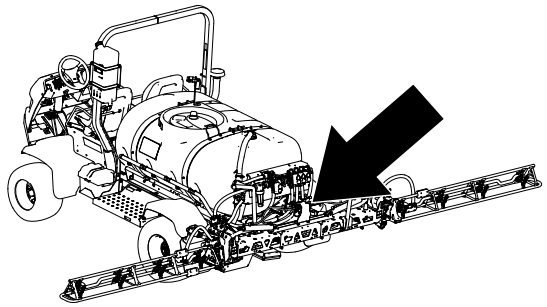

G572578

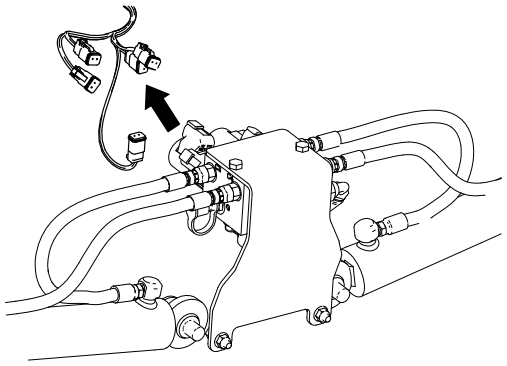

G572437

3. Remove the mounting bracket from the machine.

   Note: Retain the fasteners.

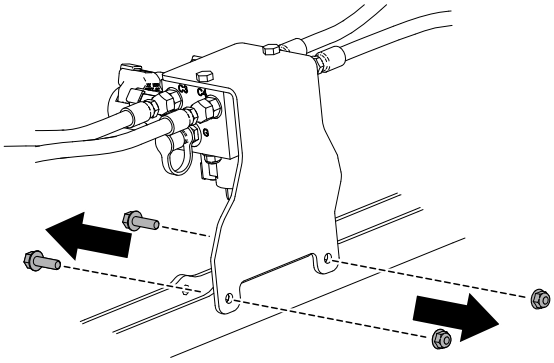

G576890

4. Remove the hydraulic manifold block from the mounting bracket.

   Note: Retain the fasteners.

   Note: The new bracket will be installed along with the electronic communications unit in the *Sonic Marker Leveling Kit* instructions.

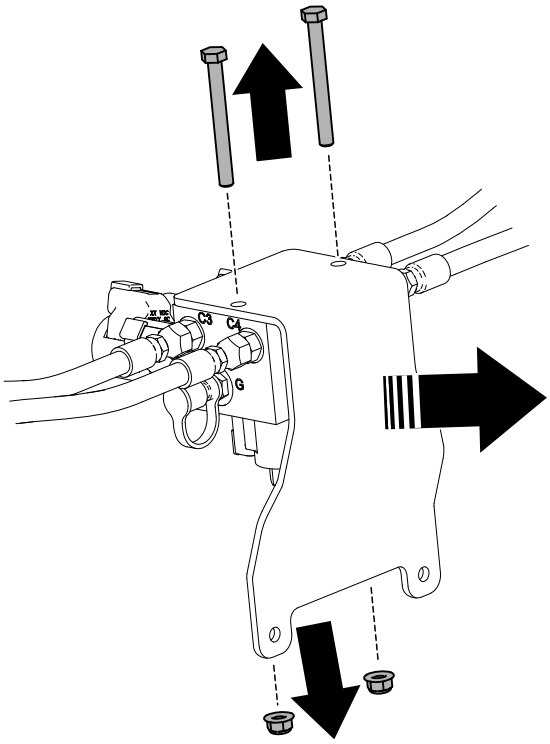

g576891

3 Installing the Electronic Controller Unit Bracket

Parts Required

1	Mounting bracket
1	Wiring harness

1. Remove the knockout plug.

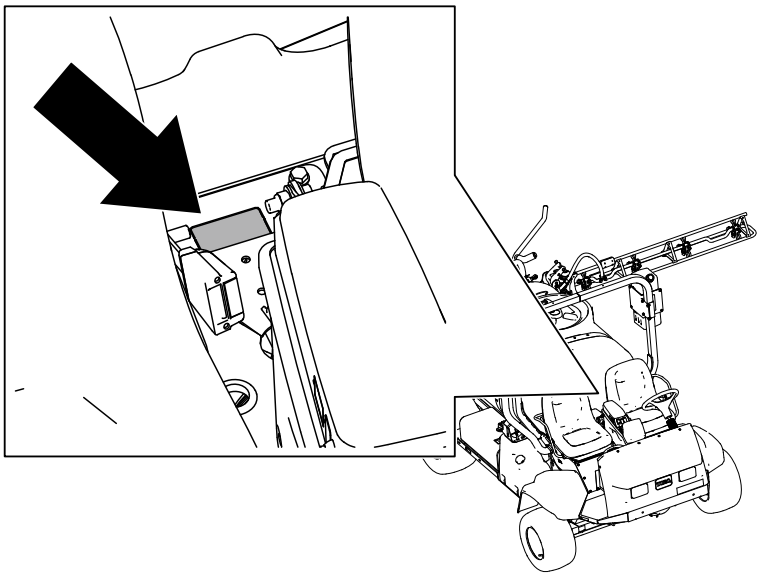

G572580

2. Remove the 2 bolts and install the bracket to the machine seat frame.

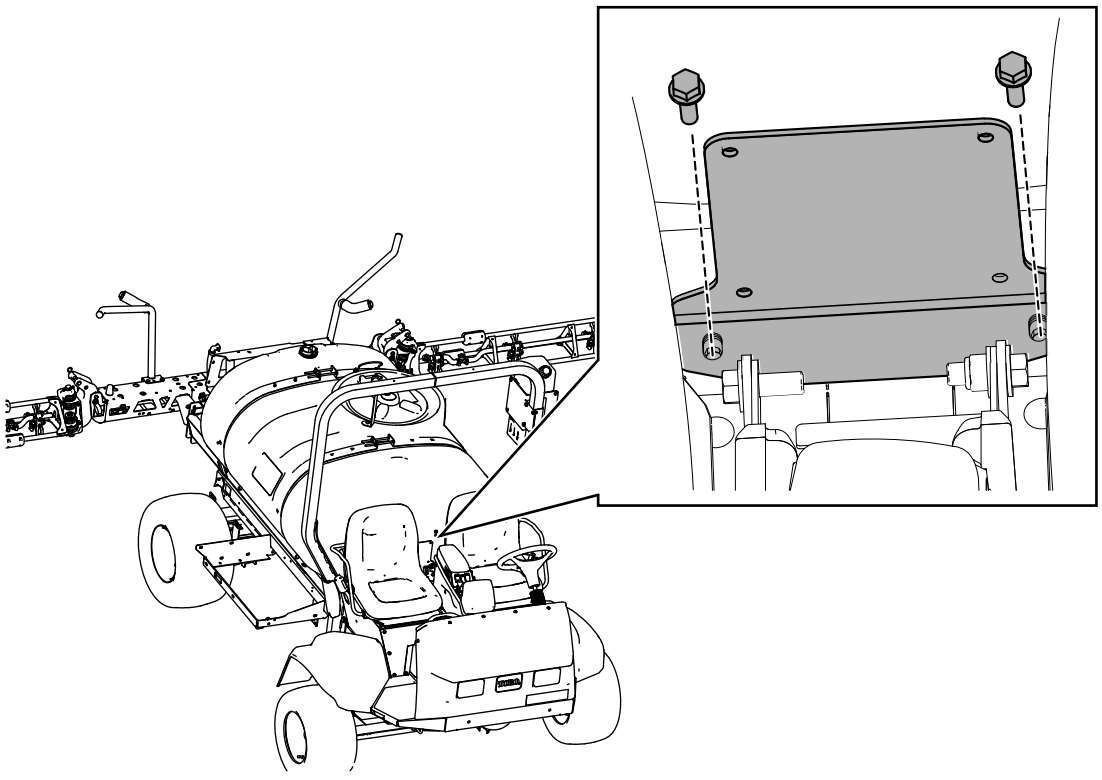

G572579

4 Wire Harness

Routing the Wire Harness

Parts Required

1	Wire harness

Route the wire harness from the rear of the machine to the console.

Note: Secure harness along the existing machine harness.
The wire harness will be connected during the installation of the *Sonic Boom Leveling Kit*.

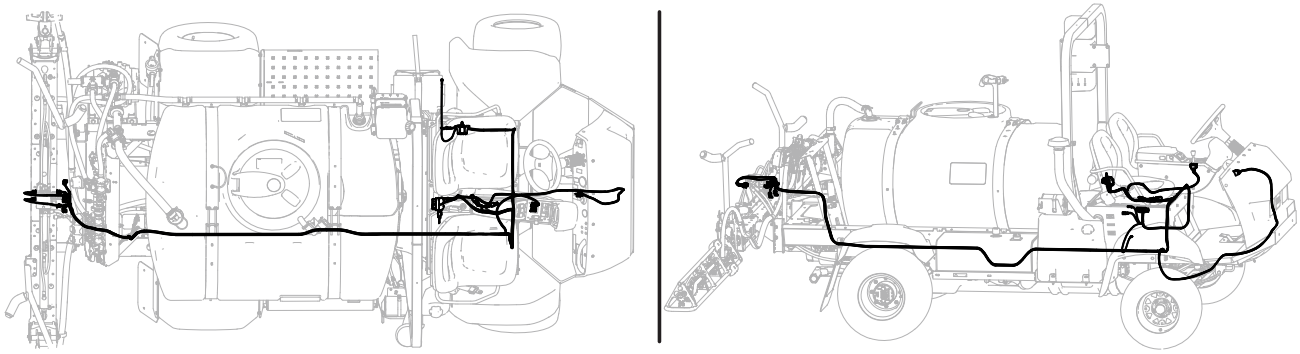

G572293

Routing the Rear Section of the Wire Harness

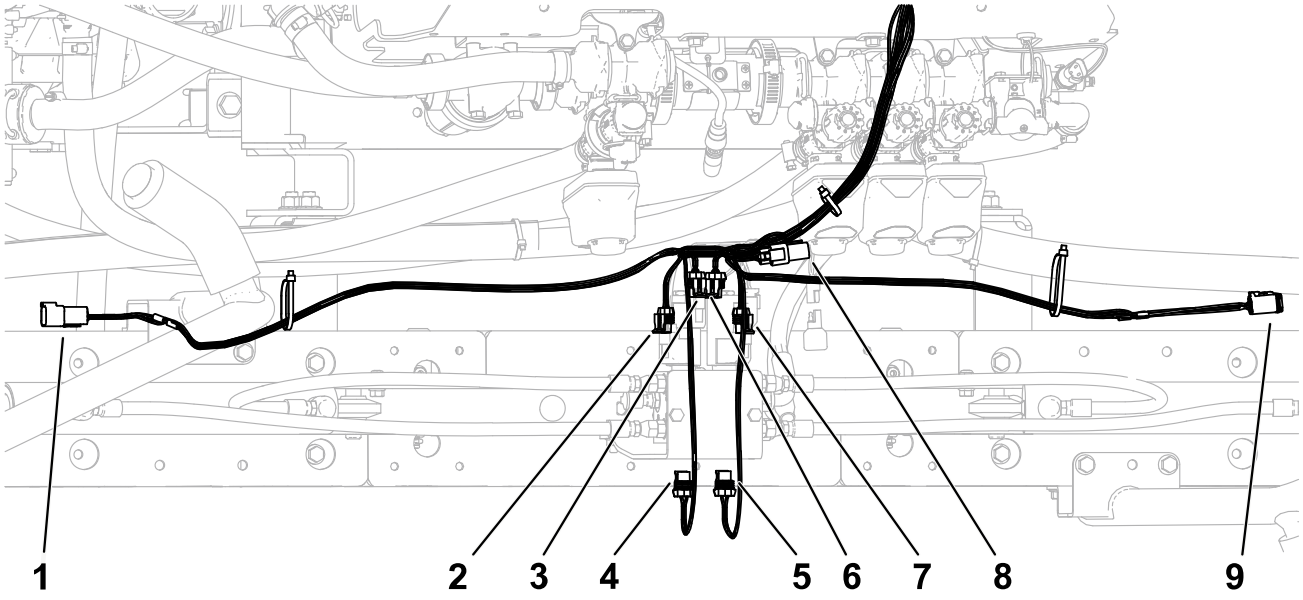

G590300

Callout	Connector Type	Label
1	6 Pin	LEFT SONIC SENSOR
2	2 socket	LEFT BOOM DOWN
3	2 socket	LEFT BOOM UP
4	2 socket	LEFT ENABLE
5	2 socket	RIGHT ENABLE
6	2 socket	RIGHT BOOM UP
7	2 socket	RIGHT BOOM DOWN
8	3 socket	CAN BUS TERMINATION
9	6 socket	RIGHT SONIC SENSOR

Route the machine along the machine wire harness to the front of the machine.

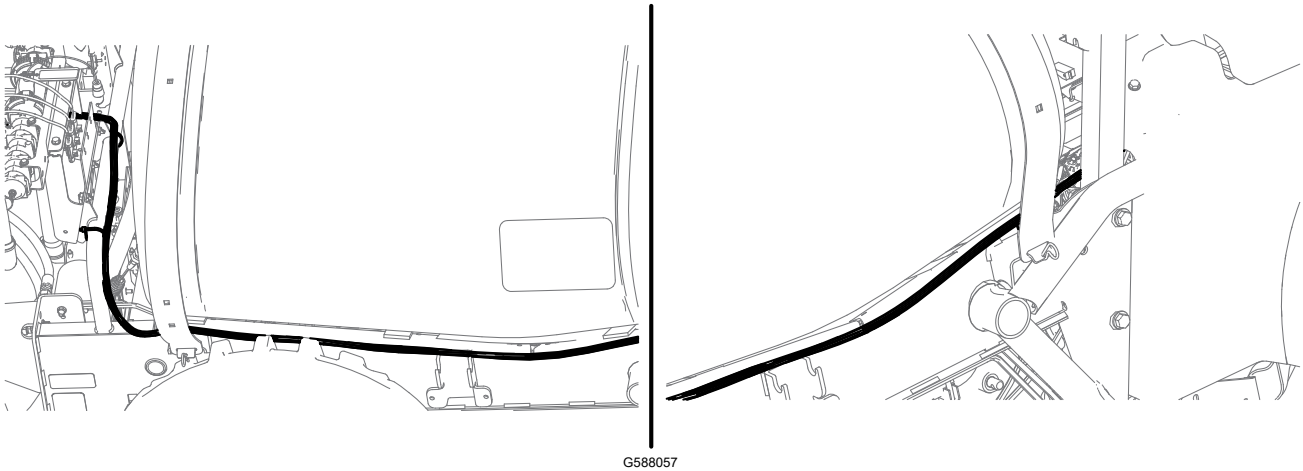

G588057

Routing the Front Section of the Wire Harness

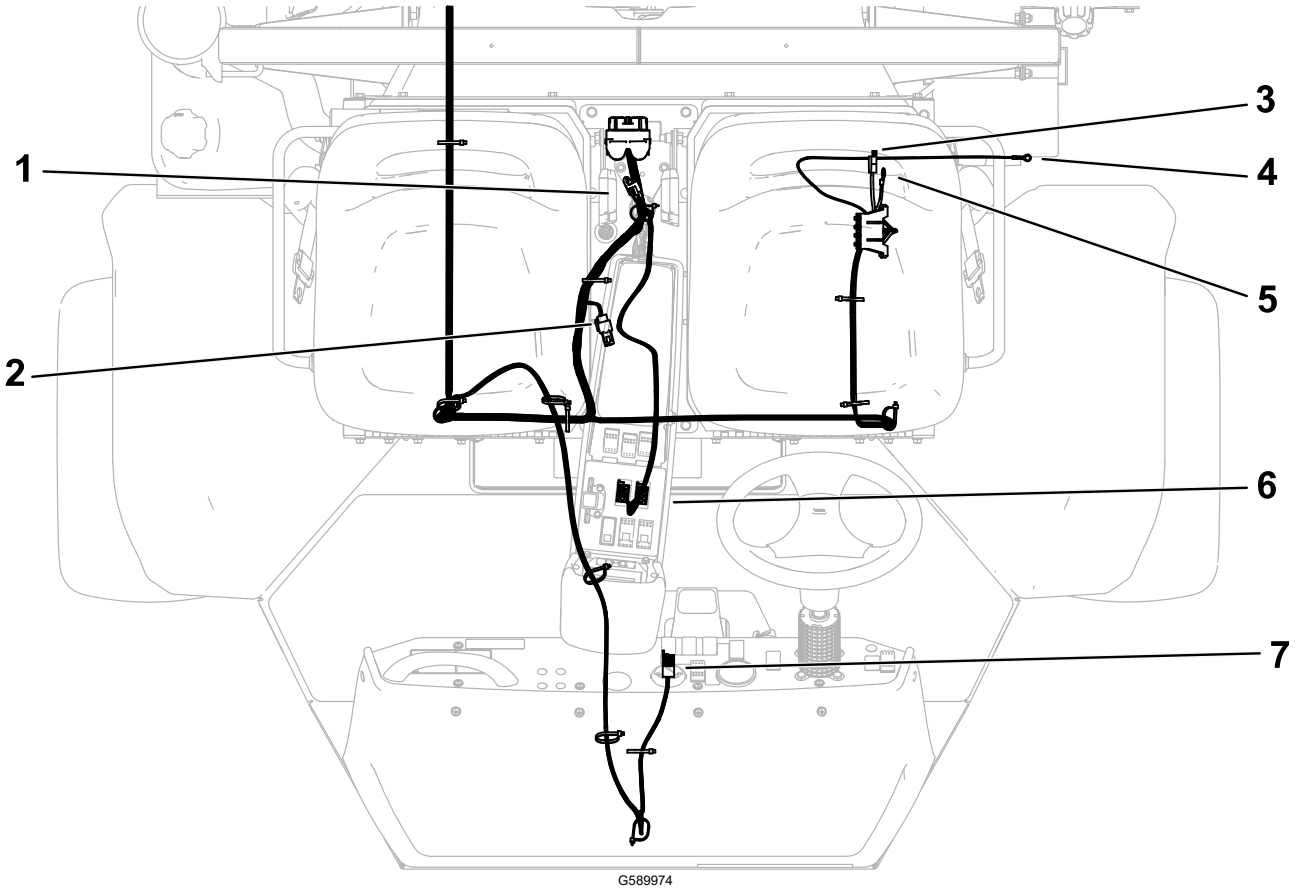

Callout	Connector Type	Label
1	3 socket and cap	CAN DIAG CAP
2	3 socket and cap	CAN BUS TERMINATION
3	Blade	TO MAIN FUSE BLOCK
4	Terminal	BATTERY
5	Terminal	GROUND BLOCK
6	8 socket (X2)	LEFT/RIGHT ACTUATOR SWITCH
7	8 socket	MODE INDICATOR

Routing the Front Section of the Wire Harness (continued)

1. Route the wire harness along the machine wire harness, steering hoses, and up to the controls.

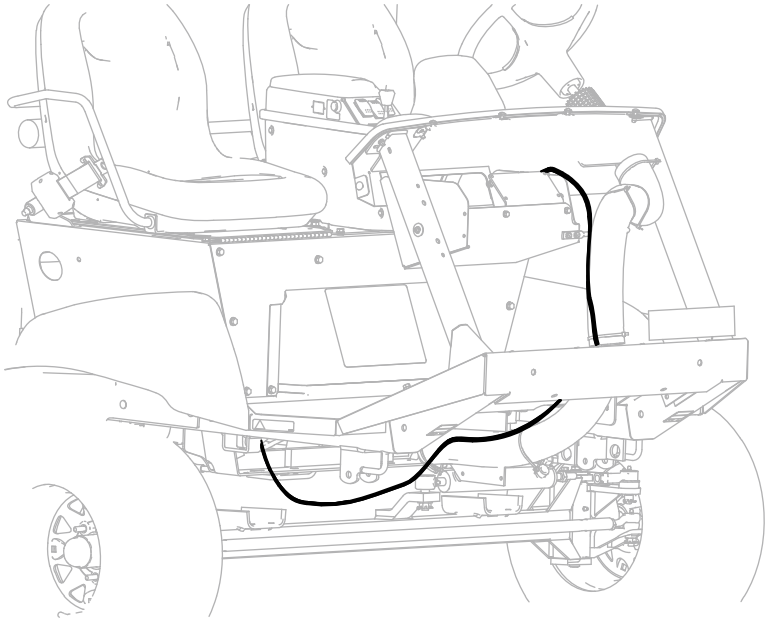

G576089

2. Route the harness along the machine harness, up through the access hole between the seats, and up to the center console.

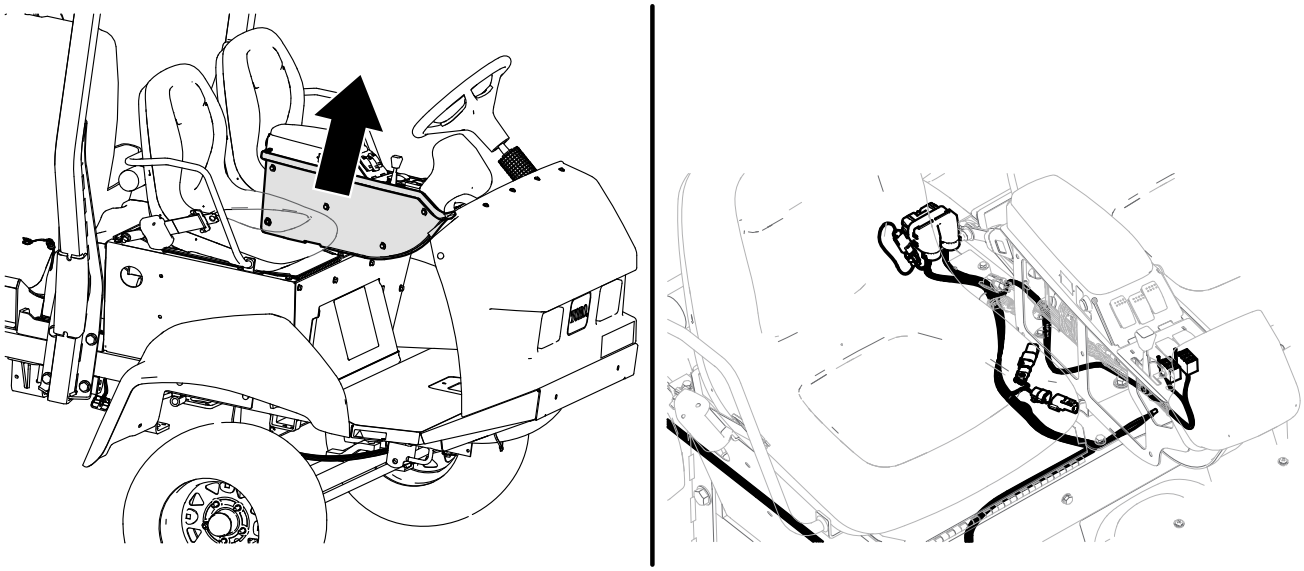

G576135

3. Route the wire harness under the seat following the machine wire harness.

   Install the fuse block, power connector, ground wire, and battery ring terminal.

Routing the Front Section of the Wire Harness (continued)

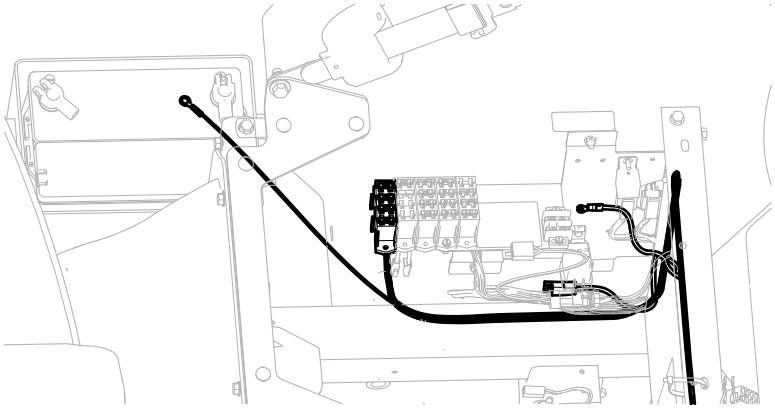

G576085

5 Completing the Installation

Follow the instructions in the *Sonic Boom Leveling Kit* to complete the installation.

Notes:

Notes:


TORO®