FORM NO. 3312-480

TORO®

MODEL NO. 38310-5000001 & UP

PARTS CATALOG

TORO POWER SHOVEL

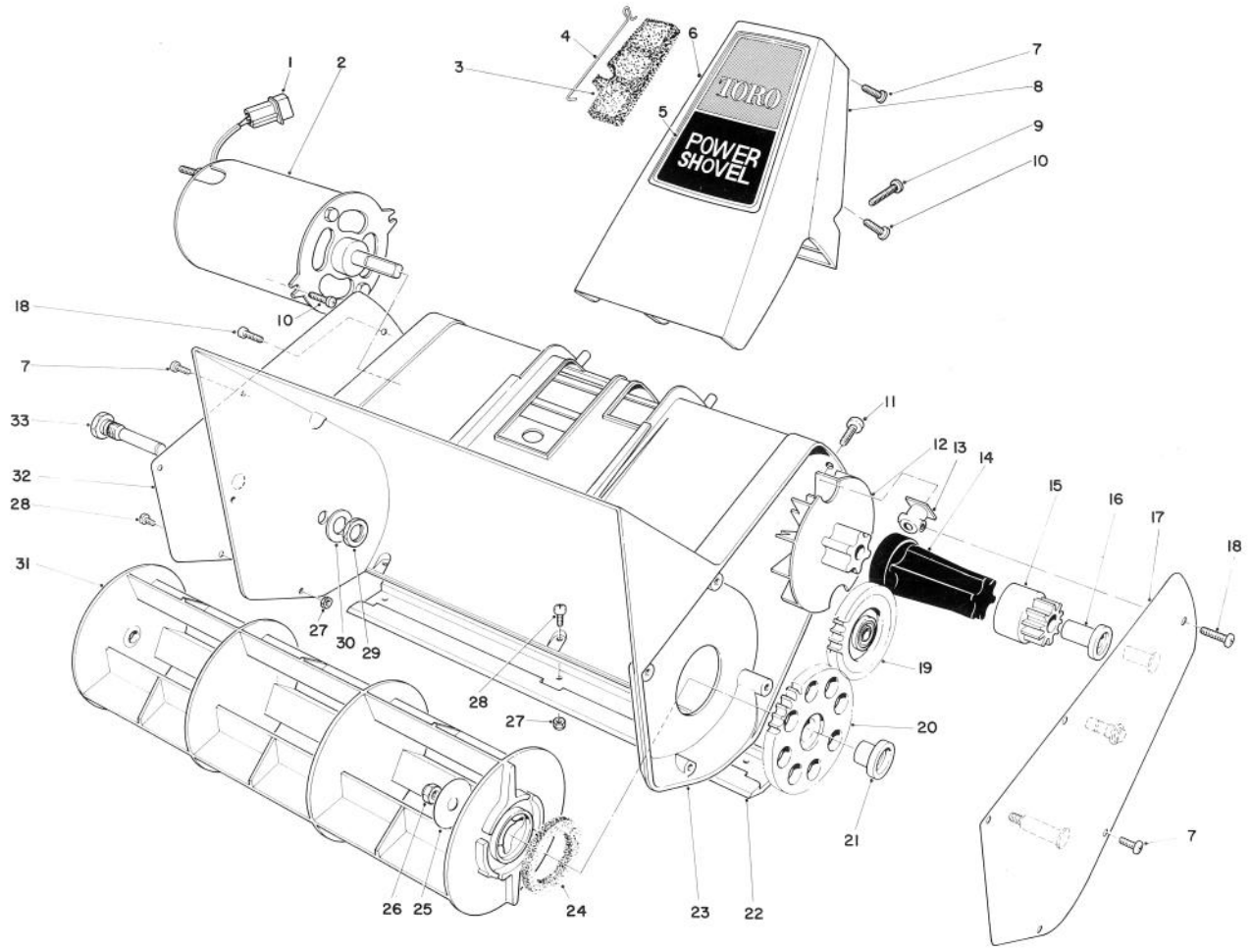

ROTOR HOUSING ASSEMBLY

Ref. No.	Part No.	Description	No. Used
1	218-517	Pin Housing	1
2	41-9920	Motor	1
3	42-0050	Filter – Foam	1
4	42-2910	Retainer – Filters	1
5	41-9840	Decal – Handle Support	1
6	42-2850	Handle Support – Front	1
7	32104-118	Screw – Pan Head	9
8	42-2860	Handle Support – Back	1
9	3250-20	Screw – Pan Head	2
10	32144-36	Screw – Pan Head	4
11	32144-65	Screw – Phillips Truss	2
12	41-9820	Fan	1
13	53-9390	Block – Mounting	2
14	38-8570	Coupling – Drive	1
15	42-0240	Drive Gear (Incl. Ref. #16)	1
16	42-0010	Bushing – Drive Gear	1
17	53-9300	Gear Carrier	1

Ref. No.	Part No.	Description	No. Used
18	32104-121	Screw – Pan Head	2
19	53-9320	Idler Gear Assembly	1
20	42-0230	Rotor Gear Assembly (Incl. Ref. #21)	1
21	41-9890	Bushing – Rotor	1
22	41-9830	Scraper	1
23	53-9380	Housing	1
24	38-8580	Washer – Felt	1
25	42-0070	Washer – Rotor	1
26	3296-13	Locknut – Thin	1
27	3296-54	Locknut – Thin	5
28	3250-19	Screw – Pan Head	5
29	3296-5	Nut – Lock	1
30	3256-24	Flat Washer	1
31	38-8170	Rotor	1
32	41-9960	Cover, Right Side	1
33	38-8210	Pin – Rotor	1

©The Toro Company — 1984

PRICE $1.00

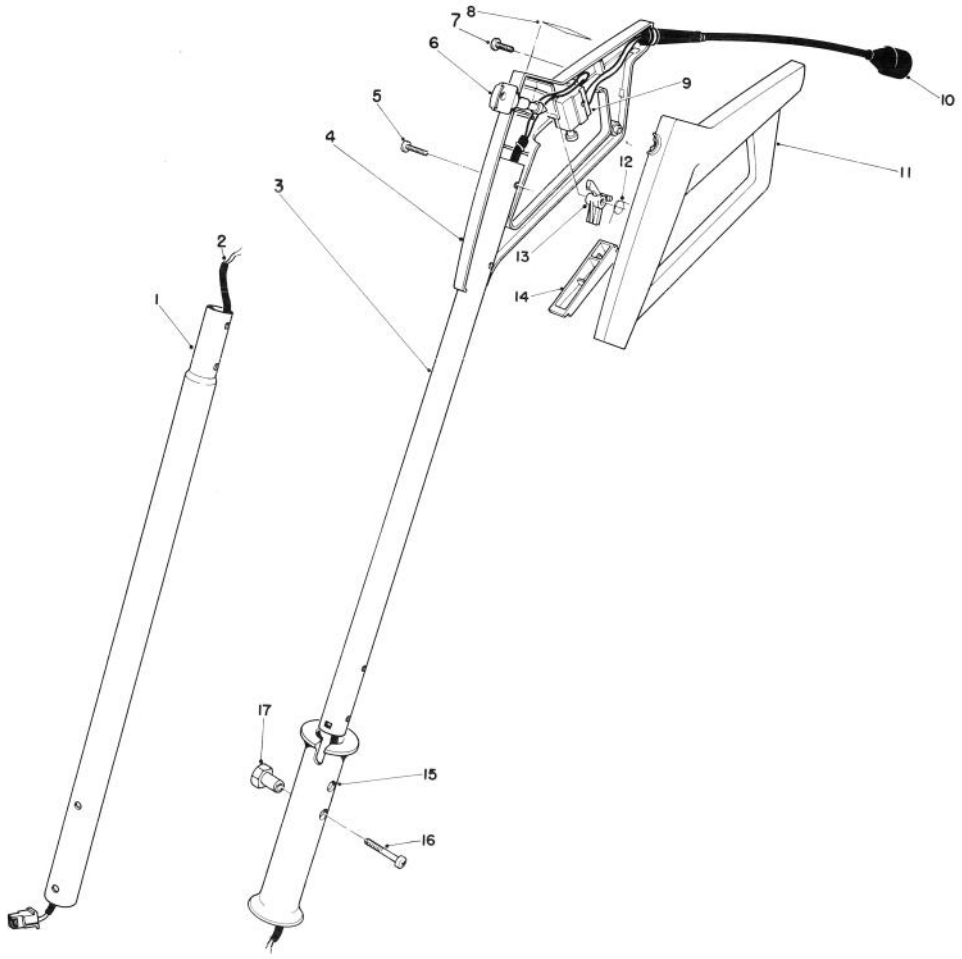

HANDLE ASSEMBLY

Ref. No.	Part No.	Description	No. Used
1	41-9850	Tube – Lower Handle	1
2	42-0020	Wire Harness	1
3	41-9860	Tube – Upper Handle	1
4	42-2830	Grip – Control R.H.	1
5	32104-121	Screw, Pan Head	3
6	38-8310	Key	2
7	32104-118	Screw, Pan Head	2
8	38-8340	Decal – Control Grip	1
9	36-8340	Switch	1

Ref. No.	Part No.	Description	No. Used
10	42-0770	Cord – Supply	1
11	42-2840	Grip – Control, L.H.	1
12	38-8330	Spring	1
13	41-9870	Lockout	1
14	42-2870	Switch Bar	1
15	41-9880	Grip – Handle	1
16	39-3720	Screw – Pan Head Special	2
17	39-3710	Nut – Hex Special	2

Litho in U.S.A.