Form No. 3328-749 Rev A

# Electric Boom Lift Kit

## for Multi-Pro® Turf Sprayers and Workman® Spray Systems

**Model No. 41030**

**Installation Instructions**

## Loose Parts List

| Description | Qty. | Use |
|---|---|---|
| Boom actuator | 2 | Install the actuators. |
| Clevis pin | 4 | |
| Cotter pin | 4 | |
| Wiring harness | 1 | Install the switches. |
| Fuse, 30 amp | 1 | |
| Momentary switch | 2 | |
| Cable tie | 4 | |

## Installing the Actuators

1. Park the vehicle on a flat surface.
2. If your vehicle has a manual boom frame with struts, remove the struts.
3. Install the boom actuators as illustrated in Figure 1, using 4 clevis pins and 4 cotter pins. Bend the ends of the cotter pins to secure them.

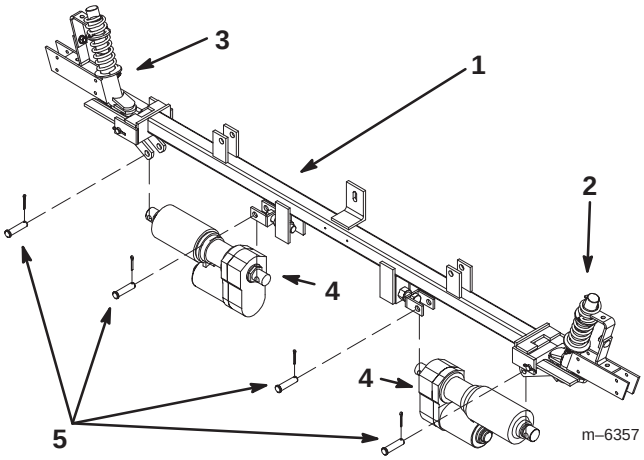


**Figure 1**

1. Center boom
2. Right boom
3. Left boom
4. Actuator
5. Clevis pin and cotter pin

4. Adjust the jam nuts on the adjustable clevises on each boom until they are as close to the clevises as possible (Fig. 2).

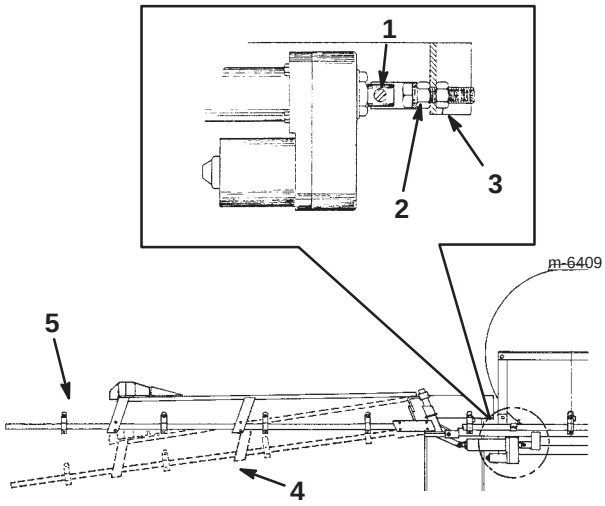


**Figure 2**

1. Adjustable clevis
2. Jam nut
3. End nut
4. Boom—adjusted correctly
5. Boom—adjusted incorrectly

5. Tighten the end nuts so that the jam nuts and clevises are tight against the brackets (Fig. 2).

© 2003 by The Toro Company
8111 Lyndale Avenue South
Bloomington, MN 55420-1196



Contact us at www.Toro.com
All Rights Reserved
Printed in the USA

**Important** The booms should not be parallel to the ground when fully down (Fig. 2). You control each boom's orientation to the ground using the switches. Adjusting the booms in any other manner may damage the boom or the actuators.

## Installing the Switches on a Multi-Pro Turf Sprayer

**Note:** If you are installing this kit on a Workman Spray System, skip to the Installing the Switches on an Workman Spray System section for instructions on installing your switches.

**Note:** If you are installing this kit on a 1100 or 5200 sprayer, skip to the Installing the Kit on an 1100 or 5200 Sprayer section for instructions on installing your switches.

1. Remove the control panel cover of your vehicle (between the seats on 5600 vehicles and to the right of the seat on 1200 and 1250 vehicles).
2. Remove the plugs and insert the switches into the appropriate holes in the control panel (ensure that they are oriented in the same direction as the other switches on the panel).
3. Connect the connectors on the wiring harness to the bottom of the switches. Connect the connector with the blue and white wires to the right switch and the connector with the yellow and green wires to the left switch (Fig. 3).

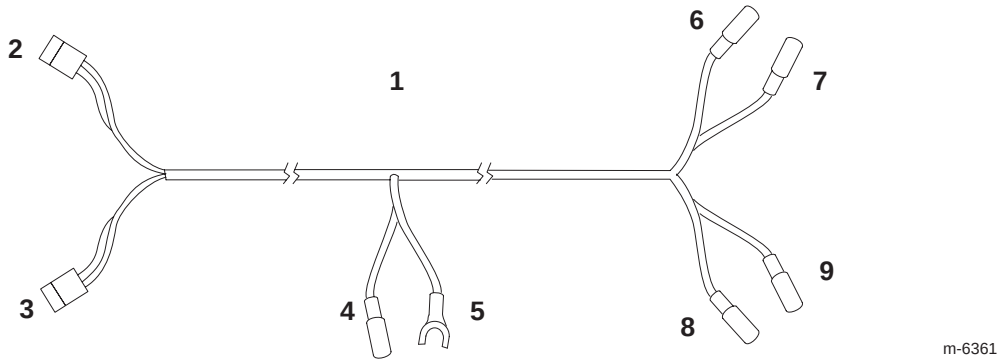


**Figure 3**

1. Wire harness
2. Connector with blue and white wires (to the right switch)
3. Connector with yellow and green wires (to the left switch)
4. Red wire (to an open position on the fuse block)
5. Black wire (to the ground terminal block)
6. Blue wire (to the red wire on the right actuator)
7. White wire (to the yellow wire on the right actuator)
8. Green wire (to the red wire on the left actuator)
9. Yellow wire (to the yellow wire on the left actuator)

4. Route the wiring harness through the control box and into the driver's seat box.
5. Connect the end of the red wire coming from the center of the wiring harness to an open position (position with no fuse) with a red wire lead on the fuse block (Fig. 3 and 4).

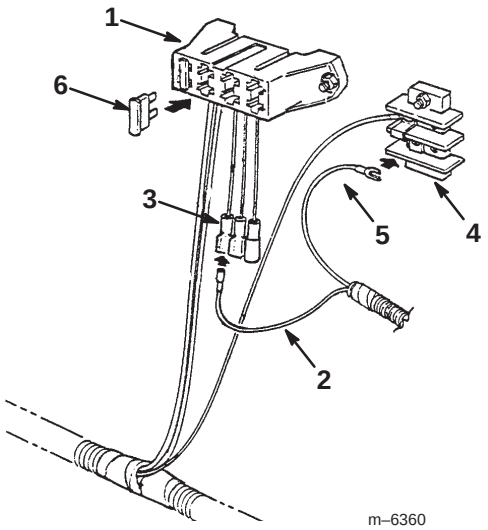


**Figure 4**

1. Fuse block
2. Red wire
3. Open position
4. Ground terminal block
5. Black wire
6. 30 amp fuse

---

**6.** Connect the black wire to the ground terminal block (Fig. 4).

**7.** Route the rest of the wire harness along the path of the main wire harness to the boom area.

**8.** Connect the blue wire with a spade connector into the connector port that lines up with the red wire of the right actuator (Fig. 3).

**9.** Connect the white wire with a spade connector into the connector port that lines up with the yellow wire of the right actuator (Fig. 3).

**10.** Connect the green wire with a spade connector into the connector port that lines up with the red wire of the left actuator (Fig. 3).

**11.** Connect the yellow wire with a spade connector into the connector port that lines up with the yellow wire of the left actuator (Fig. 3).

**12.** Secure the wire harness to the main wire harness using 4 cable ties. Ensure that the harness is secured away from the engine and cannot get caught on anything.

**13.** Replace and secure the control panel cover.

**14.** Seal the connections you made to the actuator wire connectors with silicone sealant.

**15.** Install the 30 amp fuse into the fuse block position where you connected the red wire (Fig. 4).

# Installing the Switches on a Workman Spray System

**Note:** The Workman spray system is pre–wired for this kit; discard the wiring harness.

**1.** Remove the spray control box cover.

**2.** Remove the plugs and insert the switches into the appropriate holes in the control panel (ensure that they are oriented in the same direction as the other switches on the panel).

**3.** Connect the connector in the control box with blue and orange wires to the left boom switch.

**4.** Connect the connector in the control box with yellow and green wires to the right boom switch.

**5.** Replace and secure the control box cover.

**6.** Connect the connector at the rear of the machine with the blue and orange wires to the connector on the left actuator.

**7.** Connect the connector at the rear of the machine with the yellow and green wires to the connector on the right actuator.

**8.** Seal the connections you made to the actuator wire connectors with silicone sealant.

**9.** Secure any loose wires using cable ties.

**10.** Install the 30 amp fuse into the fuse block position where you connected the red wire (Fig. 4).

# Installing the Kit on an 1100 or 5200 Sprayer

To install this kit on an 1100 or 5200 sprayer, you will need to order the following parts, in addition to this kit:

- 2 Switches, part number 30954
- 2 rubber boots, part number 30955
- Wire harness, part number 43063 (Use in place of the wire harness supplied with the kit.)
- Decal, part number 87–0610

**1.** Install the switches and rubber boots in the locations illustrated in Figure 5 (1100 sprayer) or Figure 6 (5200 sprayer).

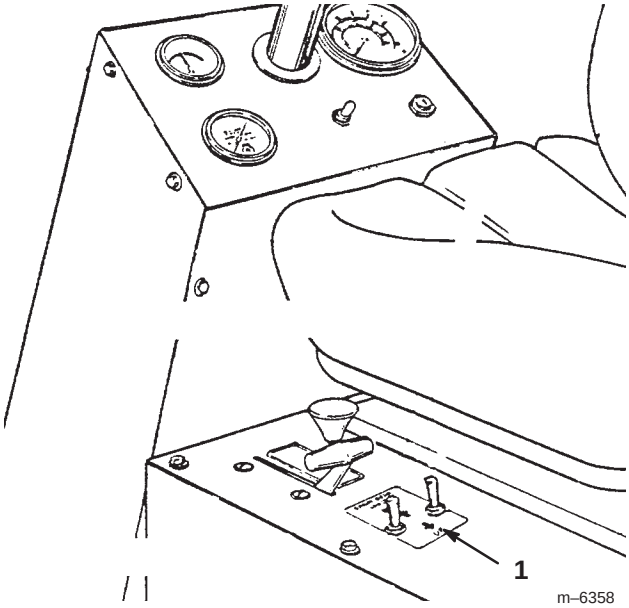


**Figure 5**

1. Switches

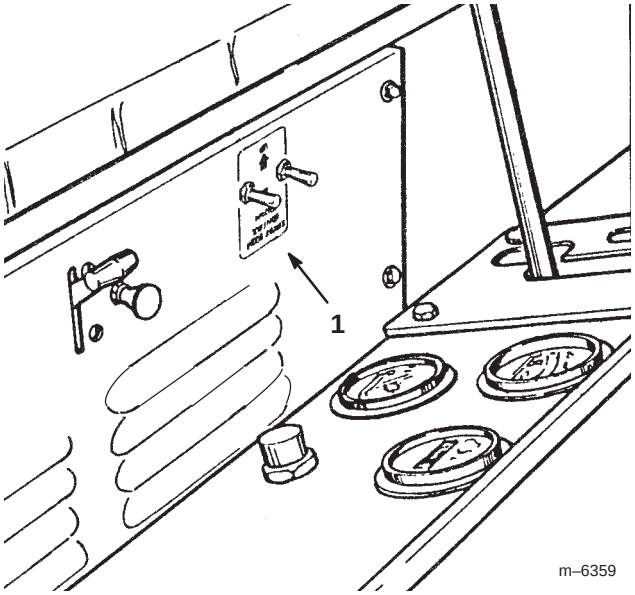


**Figure 6**

1. Switches

**2.** Install the decal between the two switches.

**3.** Proceed with step 3 on page 2.