FORM NO. 3312-489

TORO®

MODEL NO. 38165 — 5010001 & UP

PARTS CATALOG

TORO S-620 RECOIL

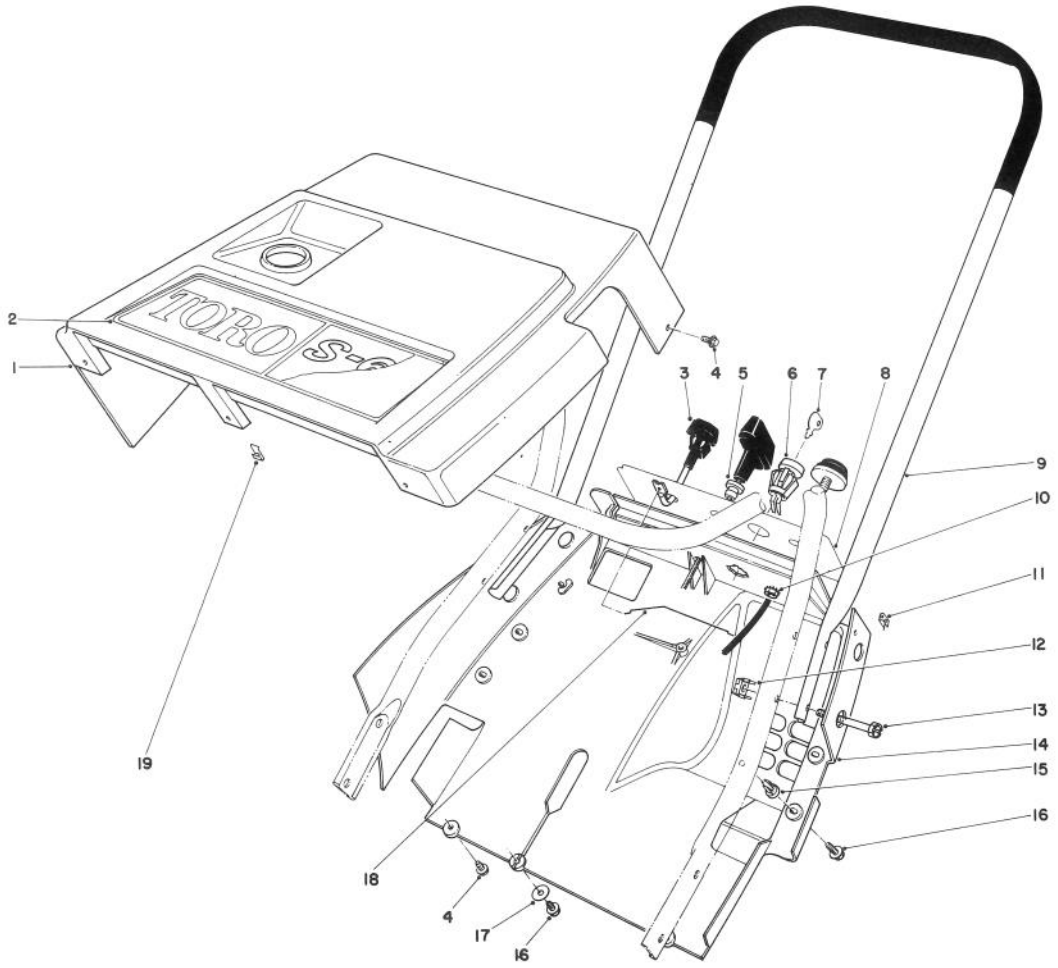

SHROUD & HANDLE ASSEMBLY

Ref. No.	Part No.	Description	No. Used
1	39-0890	Upper Shroud	1
2	52-7070	Decal — Toro	1
3	39-0560	Control Assembly — Choke	1
4	32104-76	Self-Tapping Screw	4
5	23-7470	Guide — Starter Rope	1
6	40-5940	Switch	1
7	33-2010	Key	2
8	52-7050	Decal — Control Panel	1
9	49-1370	Upper Handle	1
10	32149-2	Locknut	1

Ref. No.	Part No.	Description	No. Used
11	49-1490	Nut	2
12	3290-225	Nut — Retained	4
13	32105-11	Hex Head Machine Screw	4
14	49-1610	Lower Shroud	1
15	3290-453	Nut — Push In	3
16	32144-34	Self-Tapping Screw	4
17	3256-61	Washer	1
18	39-8180	Control Wire	1
19	52-3300	Nut	3

©The Toro Company — 1984

PRICE $1.00

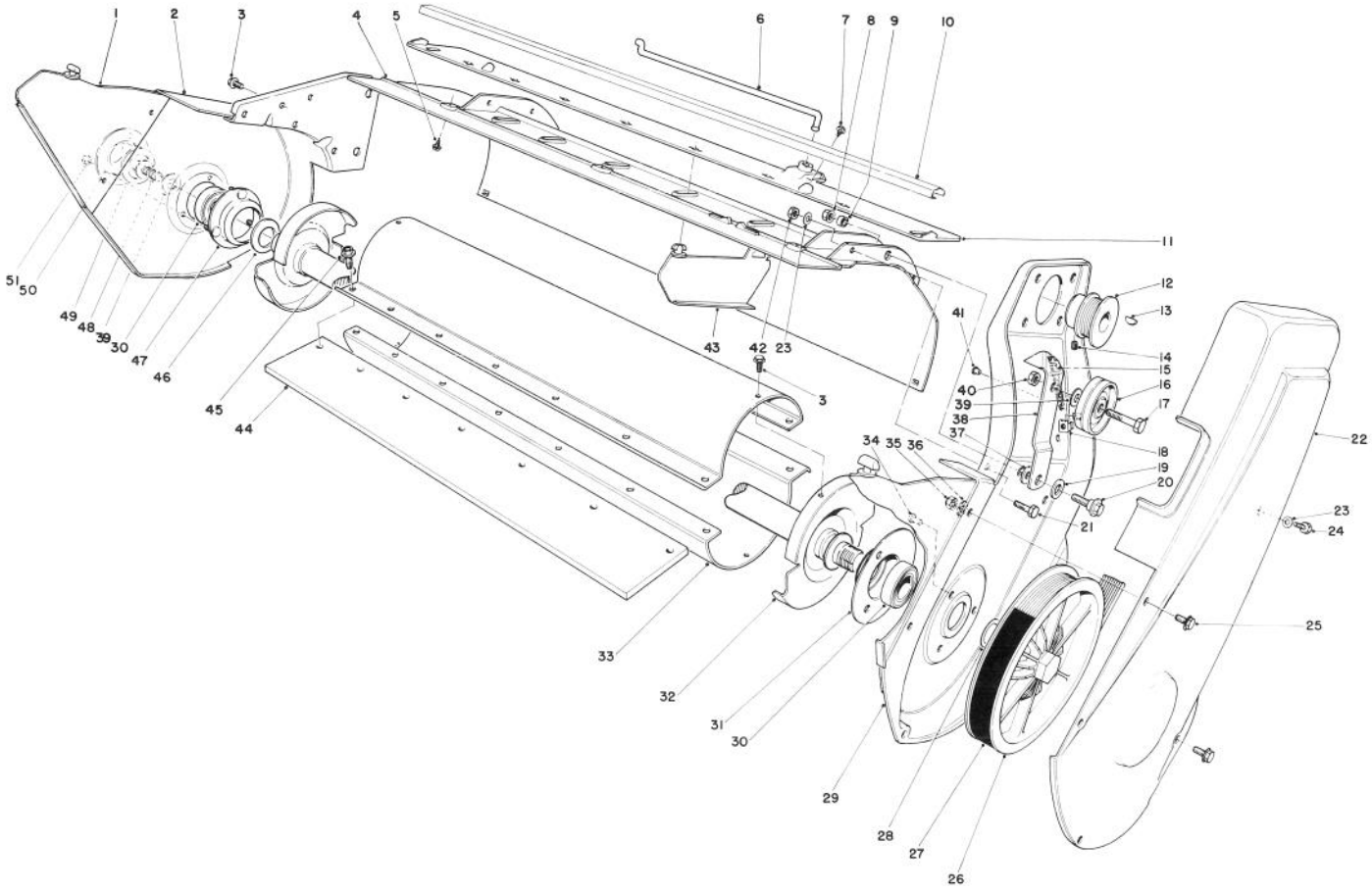

LOWER MAIN FRAME ASSEMBLY

Ref. No.	Part No.	Description	No. Used
1	52-7080	Vane — Outside	2
2	52-9100	Side Plate — Right	1
3	12-3270	Screw — Special	2
4	52-7170	Housing	1
5	32144-34	Self-Tapping Screw	3
6	52-7090	Linkage — Vane Adjustment	1
7	32104-77	Self-Tapping Screw	2
8	32128-25	Flange Nut	1
9	51-2950	Spacer	1
10	42-1650	Moulding — Warning	1
11	41-8480	Vane Mount	1
12	25-6400	Engine Pulley	1
13	3257-3	Woodruff Key	1
14	3245-32	Set Screw	2
15	26-9730	Idler Spring	1
16	25-5880	Idler Pulley	1
17	323-9	Capscrew	1
18	3290-225	Nut — Retained	1
19	25-5640	Washer	1
20	27-0410	Shoulder Screw	1
21	321-3	Capscrew	5
22	52-7110	Drive Cover	1
23	3256-22	Washer	6
24	3235-20	Capscrew	1
25	32105-2	Machine Screw	6
26	49-1530	Rotor Pulley	1

Ref. No.	Part No.	Description	No. Used
27	25-6430	Belt	1
28	26-0970	Washer	1
29	33-2130	Side Plate Left	1
30	38-7820	Ball Bearing	2
31	38-8620	Bearing Flange	1
32	52-9120	Drive Shaft & End Cap	1
33	23-3191	Shell — Rotor	2
34	3292-8	Rivet	3
35	3296-2	Locknut	6
36	3256-61	Washer — Control Pivot	4
37	5-4460	Washer	1
38	26-8990	Idler Arm	1
39	3256-24	Washer	2
40	3296-39	Locknut	1
41	29-7430	Eyelet	1
42	32152-4	Locknut	5
43	52-7060	Vane	7
44	23-3730	Rotor Blade	2
45	37-0370	Screw	14
46	52-7280	Washer — Thrust	2
47	52-9110	Bearing Flange	1
48	3234-25	Screw — Cap Hex Hd. Flange	1
49	52-7270	Washer — Rubber	1
50	52-7290	Retainer Bearing	1
51	32111-14	Nut — Cap	3

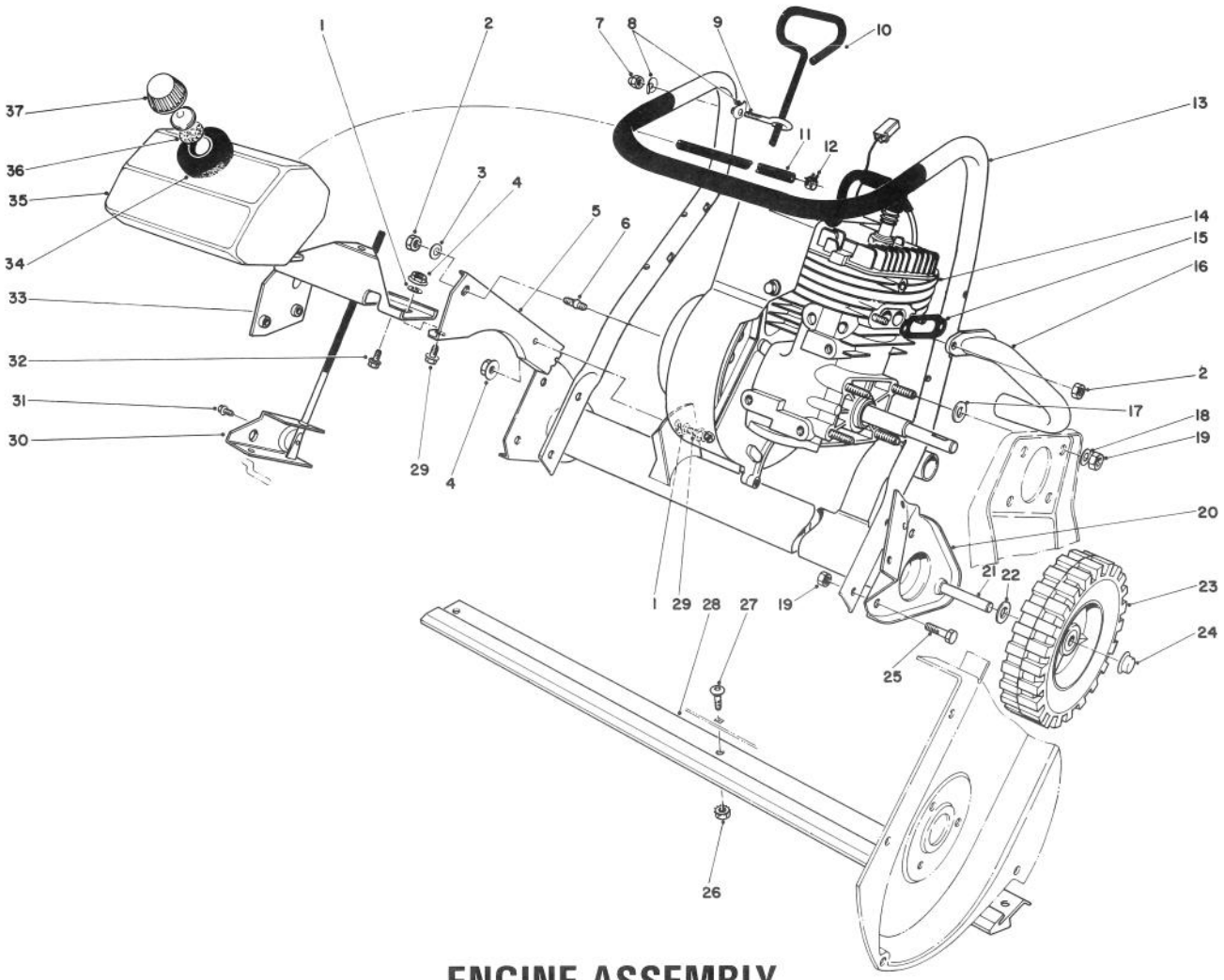

ENGINE ASSEMBLY

Ref. No.	Part No.	Description	No. Used
1	3290-244	Washer	2
2	32152-4	Locknut	3
3	7-3315	Washer	1
4	32128-30	Flange Nut	2
5	49-1570	Support — Engine	1
6	38-8710	Stud	1
7	32111-7	Cap Nut	1
8	3-7501	Washer	2
9	52-7120	Eye Bolt	1
10	49-1600	Rod — Vane Adjustment	1
11	49-2480	Gas Line	1
12	2412-86	Clamp	2
13	49-1360	Lower Handle	1
14	221-777	Engine	1
15	23-3810	Gasket — Exhaust Pipe	1
16	52-7200	Exhaust Pipe	1
17	4-2390	Spacer	4
18	3256-23	Washer	4
19	3296-29	Locknut	10

Ref. No.	Part No.	Description	No. Used
20	49-1540	Muffler Assembly	1
21	27-0060	Axle	1
22	3256-24	Washer	2
23	23-3250	Wheel	2
24	3290-320	Retainer — Push On	2
25	322-3	Capscrew	6
26	32149-2	Locknut	3
27	52-7130	Button Hd. Capscrew	3
28	23-3170	Scraper	1
29	3234-23	Screw — Flange	2
30	39-0840	Bracket — Vane Adjustment	1
31	12-5450	Screw — Special	1
32	12-3270	Screw — Special	3
33	49-1550	Support — Gas Tank	1
34	25-1610	Foam Pad	1
35	39-8670	Gas Tank	1
36	20-4620	Gasket	1
37	42-0680	Gas Cap (Incl. Ref. #36)	1

ENGINE TECUMSEH MODEL NO. AH-600 TYPE 1622

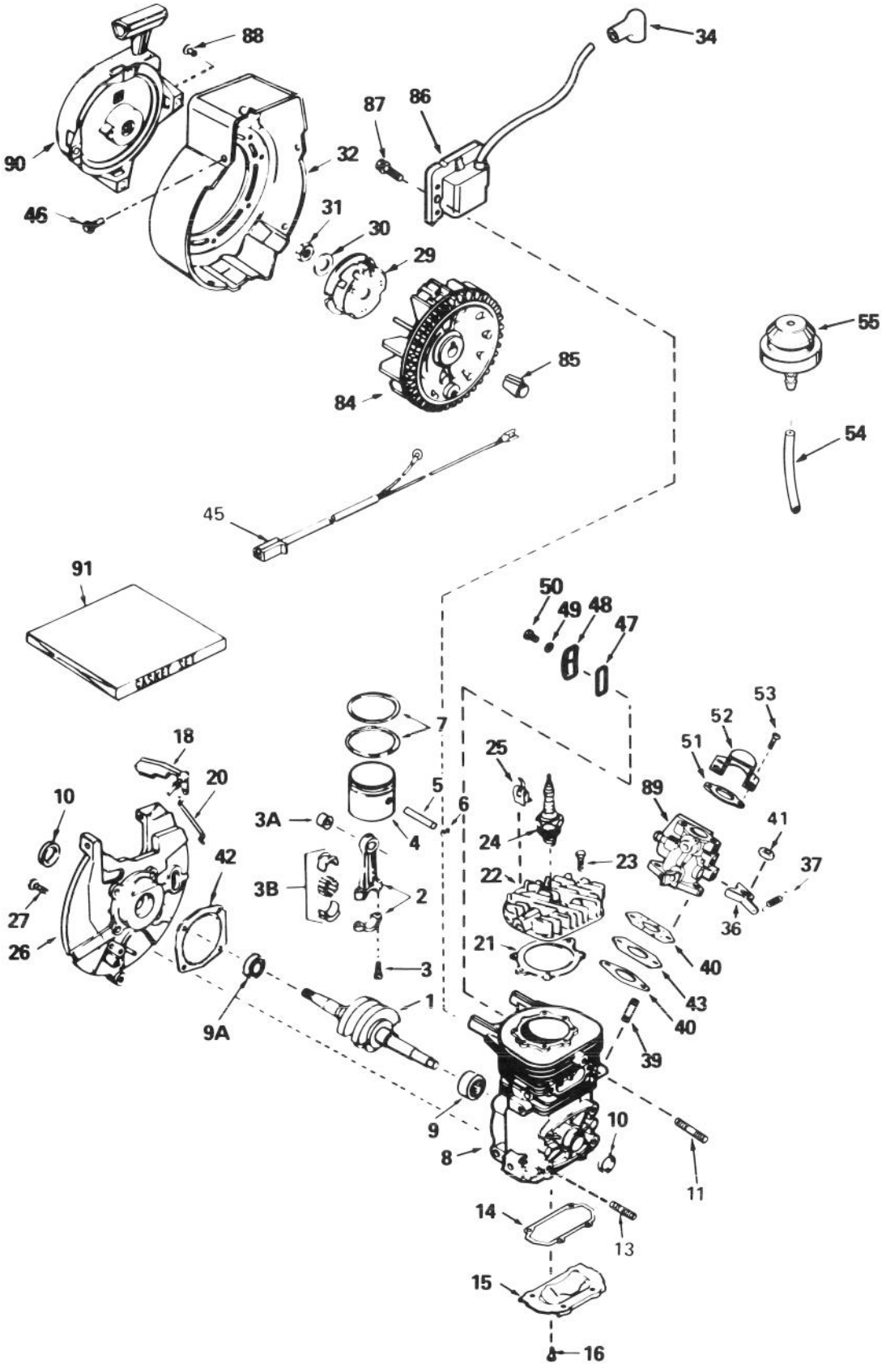

ENGINE TECUMSEH MODEL NO. AH-600 TYPE 1622

Ref. No.	Part No.	Description	No. Used
1	290515	Crankshaft	1
2	310263	Rod Assy. — Connecting (Incl. Ref. #3, 3A & 3B)	1
3	650633	Screw — Connecting Rod	1
3A	530104A	Bearing — Cartridge	1
3B	530151	Bearing & Liner Set — Needle	1
4	310269	Piston	1
5	310264	Pin — Piston	1
6	310167	Ring — Piston Pin Retaining	1
7	310190	Ring Set — Piston	1
8		Block Assy. — Cylinder (Order short block if replacement is required.)	1
9	530105	Bearing — Needle	1
9A	530110	Bearing — Ball	1
10	510319	Seal — Crankshaft	1
11	650801	Stud — Exhaust	1
13	650796	Stud — Mounting	1
14	*510323	Gasket — Cover	1
15	570644	Plate — Cover	1
16	650579	Screw — Pan Flex Hd.	1
18	490291A	Vane Assy. — Air	1
20	490294	Link — Governor	1
21	*510274	Gasket — Cylinder Head	1
22	250240A	Head — Cylinder	1
23	650477	Screw — Pan Flex Hd.	1
24	611049	Plug — Spark (RCJ-8Y or equivalent)	1
25	611034	Clip	1
26	350396	Base Assy. — Blower Housing (Incl. Ref. #10)	1
27	650561	Screw — Hex Hd.	1
29	590551	Cup — Starter	1
30	650763	Washer — Spring	1

Ref. No.	Part No.	Description	No. Used
31	650390	Nut — Flywheel	1
32	350397	Housing — Blower	1
34	610118	Cover — Spark Plug	1
36	570645	Lever — Adjusting	1
37	570646	Spring — Adjusting Lever	1
39	650527	Stud — Carburetor	1
40	*510326	Gasket — Carburetor	1
41	650457	Nut — Hex	1
42	*510292	Gasket — Housing Base	1
43	570438A	Spacer	1
45	611065	Harness — Wiring	1
46	650356	Screw — Hex Washer Hd. Powerlok Thread	1
47	*510325	Gasket — Cover	1
48	570647	Cover Assy. — Compression Release	1
49	650838	Washer — Flat	1
50	650579	Screw — Pan Flex Hd.	1
51	510206	Gasket	1
52	570434	Baffle — Air	1
53	650229	Screw — Rd. Hd.	1
54	32180C	Line — Primer	1
55	570629A	Primer Assy.	1
84	611046A	Flywheel	1
85	611032	Sleeve — Flywheel	1
86	34443A	Lamination & Coil Assy. — Solid State	1
87	650814	Screw — Hex Hd.	1
88		Rivet — Pop (3/16" Dia.) (Can be purchased locally)	1
89	632142A	Carburetor (Incl. Ref. #40)	1
90	590537	Starter Assy. — Rewind	1
91	510324A	Gasket Set	1

*Indicates parts included in Gasket Set, Ref. #91.

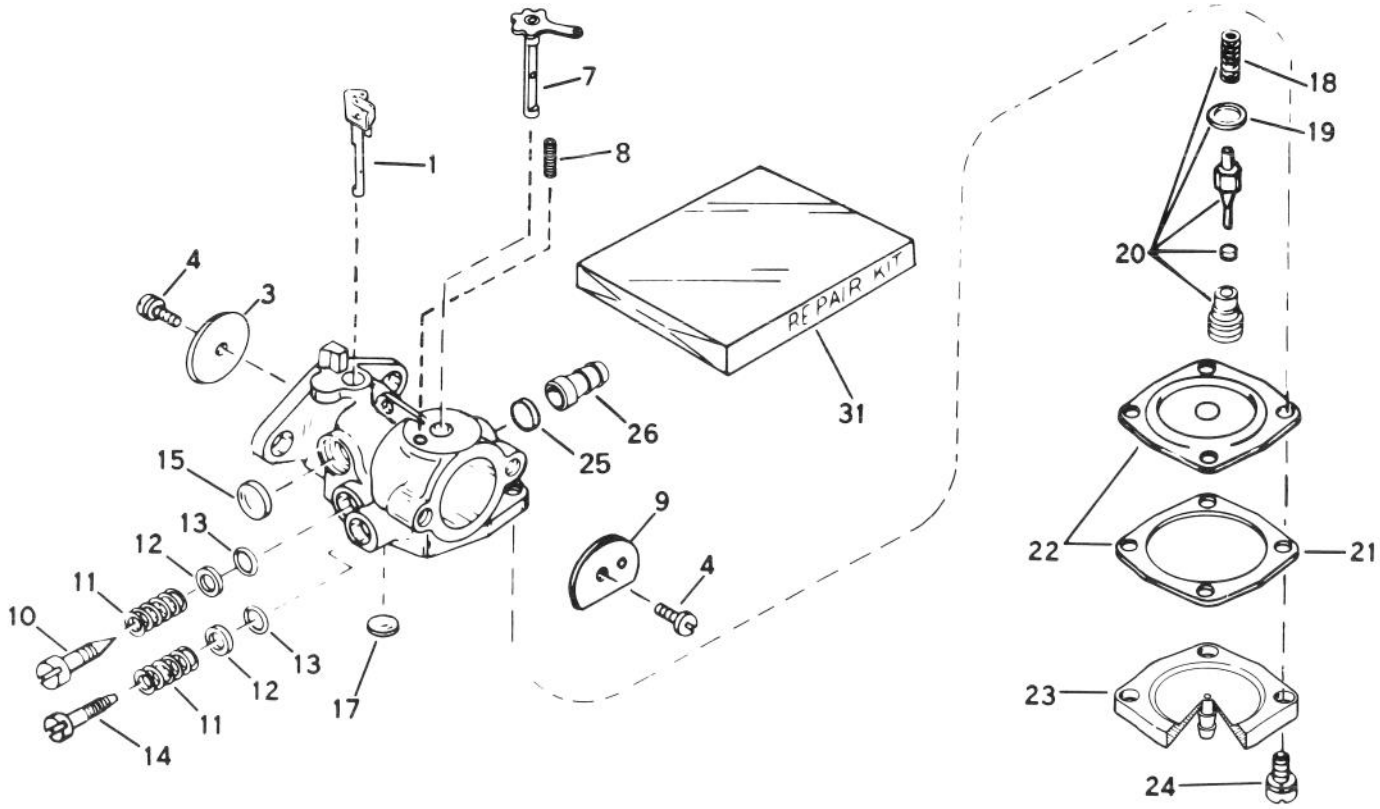

CARBURETOR NO. 632142A

Ref. No.	Part No.	Description	No. Used
1	632130	Shaft & Lever Assy. — Throttle	1
3	631036	Shutter — Throttle	1
4	650506	Screw — Throttle & Choke Shutter	1
7	631888	Shaft & Lever Assy. — Choke	1
8	630735	Spring — Choke Positioning	1
9	31837	Shutter — Choke	1
10	631562	Screw — Idle Adjustment	1
11	630738	Spring — Adjustment Screw	1
12	630739	Washer — Adjustment Screw	1
13	*630740	"O" Ring — Adjustment Screw	1
14	630898	Screw — Main Adjustment	1
15	*630748	Plug — Welch	1

Ref. No.	Part No.	Description	No. Used
17	*630746	Plug — Welch	1
18	631049	Spring — Valve	1
19	630742	Gasket — Valve Seat	1
20	*630932A	Inlet Needle, Seat, Spring & Gasket Assy. (Incl. #18 & 19)	1
21	630750	Gasket — Diaphragm	1
22	*630978	Diaphragm Assy. (Incl. #21)	1
23	632127	Cover — Diaphragm	1
24	650817	Screw — Diaphragm Cover	1
25	632163	Disk	1
26	632164	Fitting — Fuel Inlet	1
31	631893	Repair Kit	1

*Indicates Parts Included in Repair Kit Ref. #31.

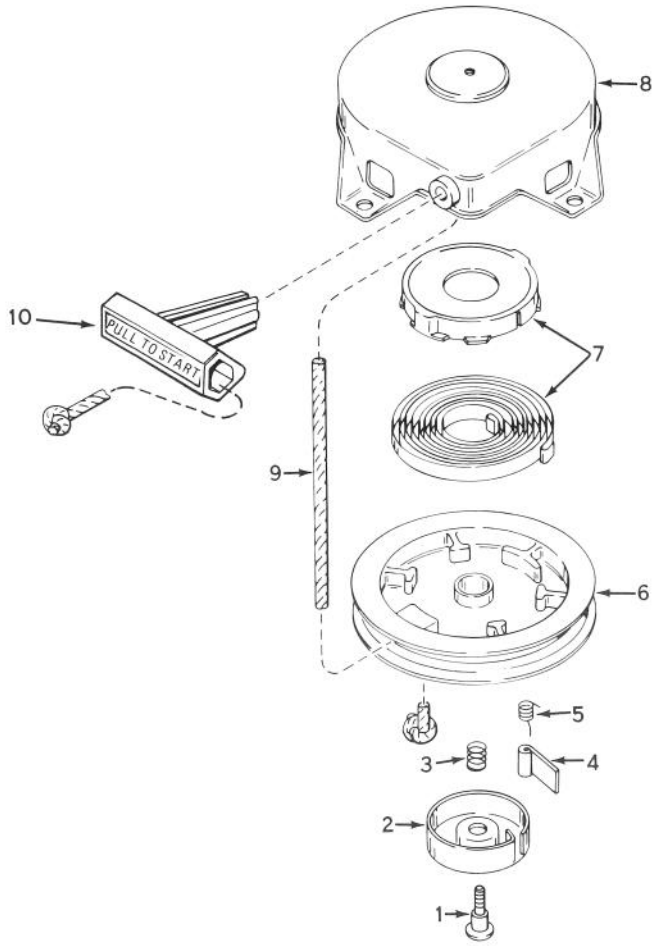

REWIND STARTER NO. 590537

Ref. No.	Part No.	Description	No. Used
1	590409A	Screw — Retainer	1
2	590410	Retainer — R.H.	1
3	590411	Spring — Brake	1
4	590148	Dog — Starter	1
5	590412	Spring — R.H. Dog	1

Ref. No.	Part No.	Description	No. Used
6	590413A	Pulley	1
7	590414	Spring & Keeper Assy.	1
8	590536	Housing Assy. — Starter	1
9	590535	Rope — Starter	1
10	590452	Handle Assy. — Starter	1

IDENTIFICATION AND ORDERING

MODEL AND SERIAL NUMBERS

The S-620 has two identification numbers. A model number and a serial number. The two numbers are stamped on a decal which is located on right side of rotor housing, just ahead of the right wheel. In any correspondence concerning the S-620, supply model and serial numbers to assure that correct information and replacement parts are obtained.

To order replacement parts from an Authorized TORO Service Dealer, supply the following information:

1. Model and serial numbers of the S-620
2. Part number, description, and quantity of part(s) desired.

Note: Do not order by reference number if a parts catalog is being used; use the PART NUMBER.

The Toro Promise

A TWO YEAR LIMITED WARRANTY

The Toro Company promises to repair your TORO Product if defective in materials or workmanship. The following time periods from the date of purchase apply:

Residential Product ..... 2 Years
Residential Products Used Commercially ..... 45 Days

The costs of parts and labor are included, but the customer pays the transportation costs. Just return any residential product to an Authorized TORO Service Dealer or TORO Distributor.

Should you feel your TORO Product is defective and wish to rely on The Toro Promise, the following procedure is recommended:

1. Contact any Authorized TORO Service Dealer, TORO Master Service Dealer, or TORO Distributor (the Yellow Pages of your telephone directory is a good reference source).
2. He will either instruct you to return the product to him or recommend another Authorized TORO Service outlet which might be more convenient.
3. Bring the product along with your original sales slip, or other evidence of purchase date, to the service dealer.
4. The servicing dealer will inspect the unit, advise you whether the product is defective and, if so, make all repairs necessary to correct the defect without extra charge to you.

If for any reason you are dissatisfied with the dealer's analysis of the defect or the service performed, you may contact us.

Write:

TORO Consumer Service Department
8111 Lyndale Avenue South
Minneapolis, Minnesota 55420

The above remedy of product defects through repair by an Authorized TORO Service Dealer is the purchaser's sole remedy for any defect.

THERE IS NO OTHER EXPRESS WARRANTY. ALL IMPLIED WARRANTIES OF MERCHANTABILITY AND FITNESS FOR USE ARE LIMITED TO THE DURATION OF THE EXPRESS WARRANTY.

Some states do not allow limitations on how long an implied warranty lasts, so the above limitation may not apply to you.

This warranty applies only to parts or components which are defective and does not cover repairs necessary due to normal wear, misuse, accidents, or lack of proper maintenance. Regular, routine maintenance of the unit to keep it in proper operating condition is the responsibility of the owner.

All warranty repairs reimbursable under The Toro Promise must be performed by an Authorized TORO Service Dealer using Toro approved replacement parts.

Repairs or attemped repairs by anyone other than an Authorized TORO Service Account are not reimbursable under The Toro Promise. In addition, these unauthorized repair attempts may result in additional malfunctions, the correction of which is not covered by warranty.

THE TORO COMPANY IS NOT LIABLE FOR INDIRECT, INCIDENTAL OR CONSEQUENTIAL DAMAGES IN CONNECTION WITH THE USE OF THE PRODUCT INCLUDING ANY COST OR EXPENSE OF PROVIDING SUBSTITUTE EQUIPMENT OR SERVICE DURING PERIODS OF MALFUNCTION OR NON-USE.

Some states do not allow the exclusion or limitation of incidental or consequential damages, so the above limitation or exclusion may not apply to you.

This warranty gives you specific legal rights, and you may also have other rights which vary from state to state.

COUNTRIES OTHER THAN THE UNITED STATES OR CANADA

Customers who have purchased TORO products exported from the United States or Canada should contact their TORO Distributor (Dealer) to obtain guarantee policies for your country, province or state. If for any reason you are dissatisfied with your Distributor's service or have difficulty obtaining guarantee information, contact the TORO importer. If all other remedies fail, you may contact us at The Toro Company.

Compliance with Radio Interference Regulations Certified.
Certifie Conforme au Reglement sur le Brouillage Radioelectrique.