Form No. 3473-394 Rev B

TORO®

Count on it.

Parts Catalog

Titan® MR6000 Zero Turn

Riding Mower

Model No. 76660TA—Serial No. 418000000 and Up

Register at www.Toro.com.
Original Instructions (EN)

3473-394 B

Ordering Replacement Parts

To order replacement parts, please supply the part number, the quantity, and the description of each part desired.

Understanding Reference Numbers

Each identified part in an illustration has a reference number. The reference number for a part also appears in the parts list, along with other information about the part.

This catalog uses two special reference number formats, one to indicate parts in a service assembly and another to indicate the quantity of a given part in an illustration.

Service Assembly Reference Numbers

Parts in service assemblies have reference numbers in the form a:b. The a represents the reference number of the entire service assembly and the b represents a sequential number unique to each part within the service assembly.

For example, a wheel assembly might be identified by reference number 6, the tire by 6:1, the valve by 6:2, and the wheel by 6:3. When you order the assembly identified by reference number 6, you receive all parts identified by reference numbers 6:1,6:2, and 6:3. However, you may also order any part individually. Reference numbers of this type appear in illustration and in parts lists.

Reference Numbers Indicating Quantity

In an illustration, if a reference number indicates more than one part, the reference number has the form nX y. The n represents the quantity of the part, the X is the multiplication symbol, and the y represents the reference number.

For example, in an illustration, the reference number 2X 37 means that two of the parts identified by reference number 37 are indicated.

Contents

Frame Assembly 4
Decklift Assembly 6
Caster Fork and Wheel Assembly 8
Hydraulic Drive Assembly 10
LH Hydro Transmission Assembly No. 147-2860 12
RH Hydro Transmission Assembly No. 147-2861 14
Parking Brake Assembly 16
Rear Wheel Assembly 18
Motion Control Assembly 20
Engine and Muffler Assembly 22
Styling Pod Assembly 24
Fuel Tank Assembly No. 147-5288 26
Electrical Assembly 28
60 Inch Deck and Decal Assembly 30
Deck Decal Assembly No. 147-8751 32
Model Specific Assembly 34
Seat Pan Assembly 36
Clutch Assembly 38
Attachments and Accessories 40

© 2025—The Toro® Company
8111 Lyndale Avenue South
Bloomington, MN 55420

Contact us at www.Toro.com.
Printed in the USA.
All Rights Reserved

Frame Assembly

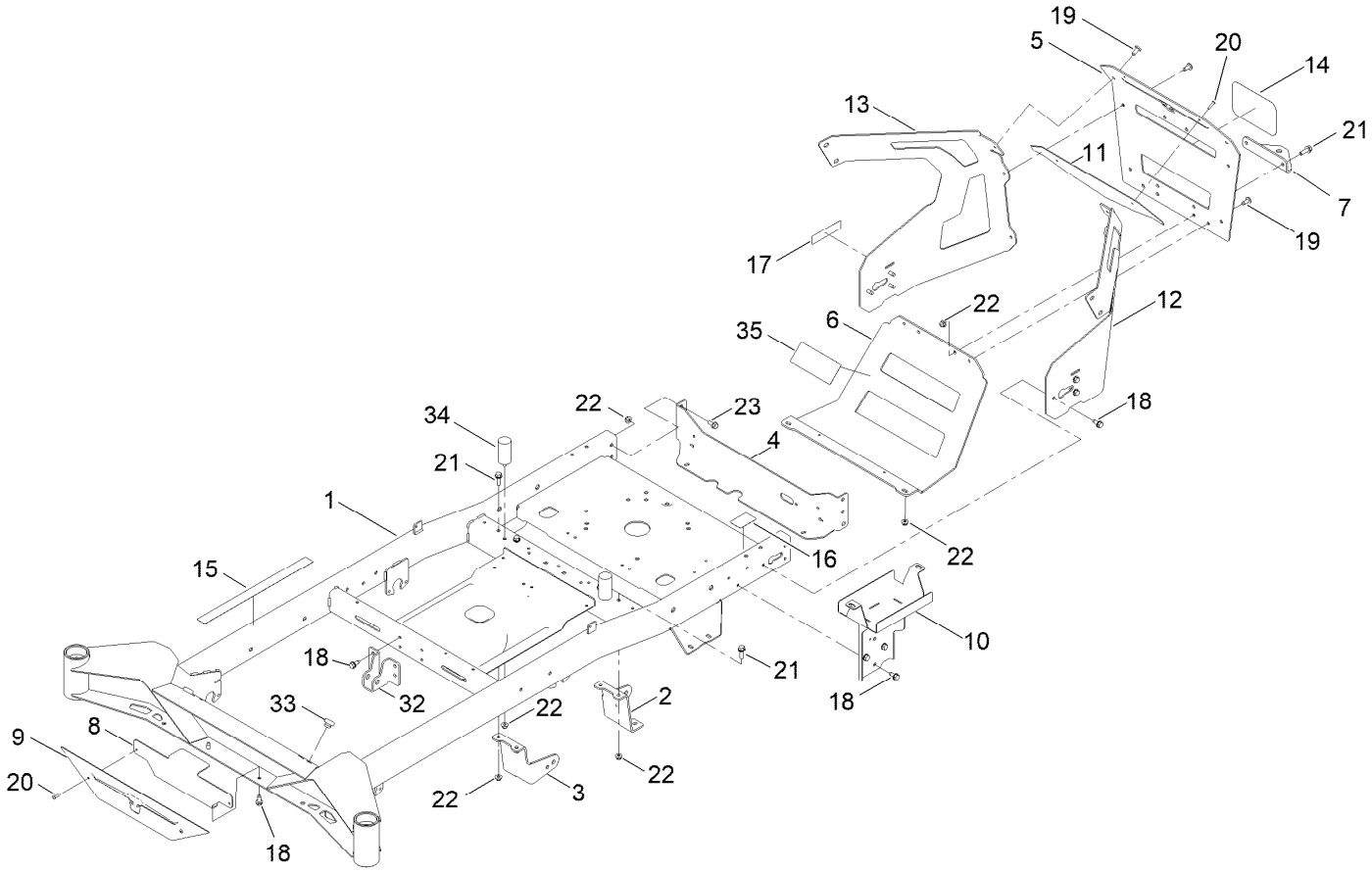

Frame Assembly (continued)

Ref.	Part Number	Qty.	Description
1	161-6608	1	Service ASM-Frame, Titan
2	161-6506-01	1	Mount-Drive, LH
3	161-6507-01	1	Mount-Drive, RH
4	163-3137-03	1	Plate-Mount, Rear
5	147-2998-03	1	Guard-Engine
6	163-6003-03	1	Guard-Muffler
7	117-1232-03	1	Bracket-Hitch
8	147-2878-01	1	Plate-Backer
9	147-2879-03	1	Logo-Plate-Front
10	145-6283-01	1	Wa-Battery Mount
11	147-2999-01	1	Plate-Backer
12	147-2996-01	1	Guard-Engine LH
13	147-2997-01	1	Guard-Engine-RH
14	99-4693	1	Decal
15	144-5288	1	Decal-Warning
16	161-6207	1	Decal-Bypass
17	142-5864	1	Decal-Spark Arrester
18	32144-70	15	Screw-HWHTF
19	138-9753	8	Screw
20	130-8451	4	Rivet-Trifold
21	139-2596	6	Screw-HHF
22	119-4041	14	Nut-HF
23	139-2598	4	Screw-HHF
32	145-6323-01	1	Bracket-Mount Damper, Lower
33	140-3460	2	Bumper-Rubber
34	145-6310	2	Bumper-Rubber
35	161-6260	1	Tape-Heat

Decklift Assembly

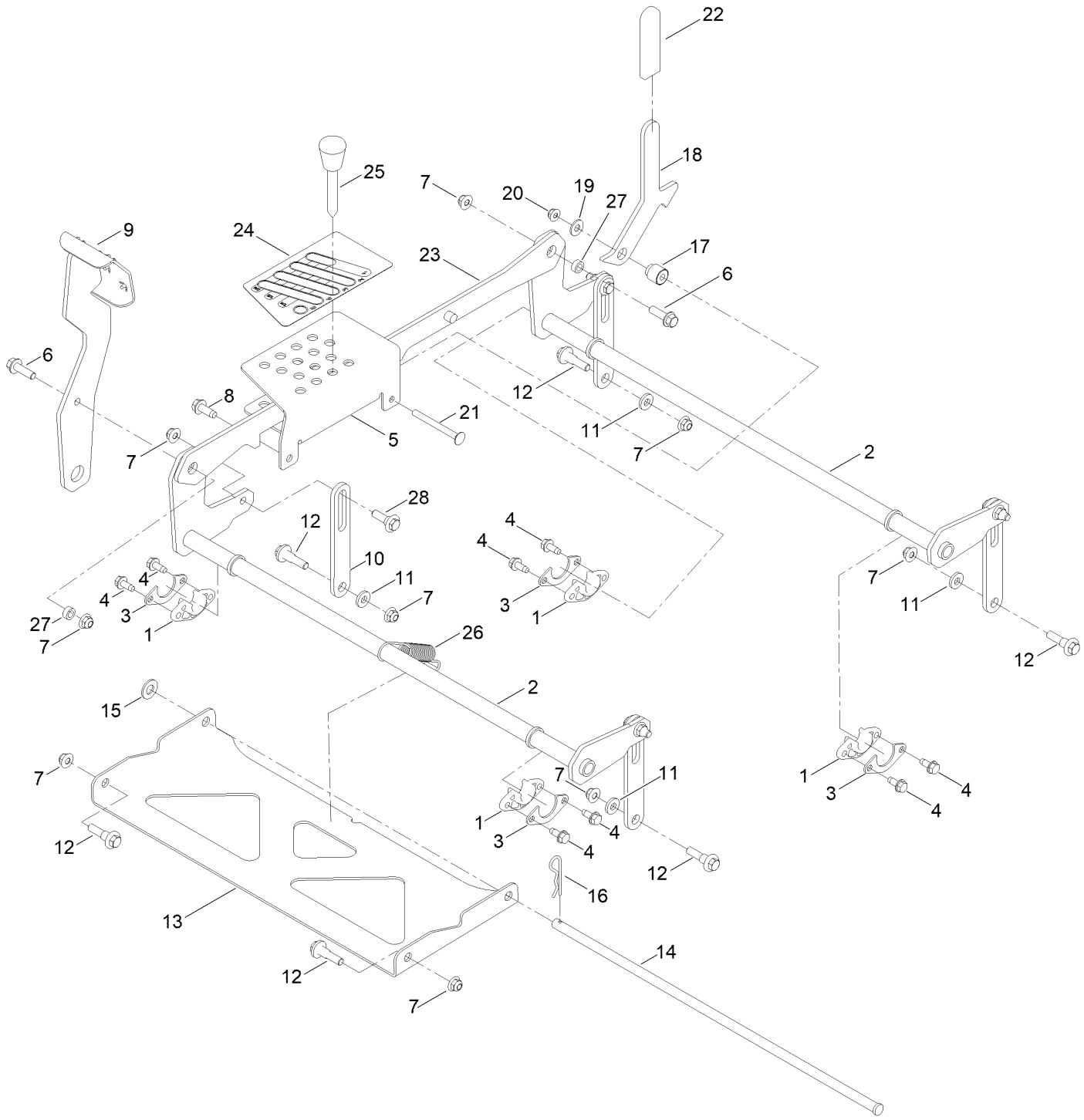

Decklift Assembly (continued)

Ref.	Part Number	Qty.	Description
1	139-5872	4	Bearing-Flange
2	161-4632-01	2	Pivot ASM-Decklift [red]
3	138-7204	4	Gusset-Deck Lift
4	32144-70	8	Screw-HWHTF
5	145-6260-01	1	Bracket-HOC
6	119-4061	2	Screw-HHF
7	119-4042	12	Nut-HF, NI
8	139-2428	1	Screw-HWH
9	145-6278-01	1	Pedal ASM [red]
10	161-4635-01	4	Link-HOC
11	138-7207	4	Spacer-Hub, Blower
12	130-0742	6	Bolt-Shoulder
13	145-6248-03	1	Pan-Deck Pivot
14	145-6288	1	Pin-Deck
15	139-2611	1	Washer-Flat
16	139-2562	1	Pin-Hair
17	145-6282	1	Spacer-Stepped
18	145-6279	1	Plate-Transport Lock
19	137-3082	1	Washer-Plain
20	119-4041	1	Nut-HF
21	138-0741	1	Screw-CARR
22	140-0413	1	Grip-Handle
23	145-6262-01	1	Link ASM-HOC [red]
24	147-2867	1	Decal-HOC
25	140-2146	1	HOC Pin ASM
26	138-7206	1	Spring-Extension
27	140-2093	2	Spacer
28	614672	4	Screw-Shoulder, HWH

Caster Fork and Wheel Assembly

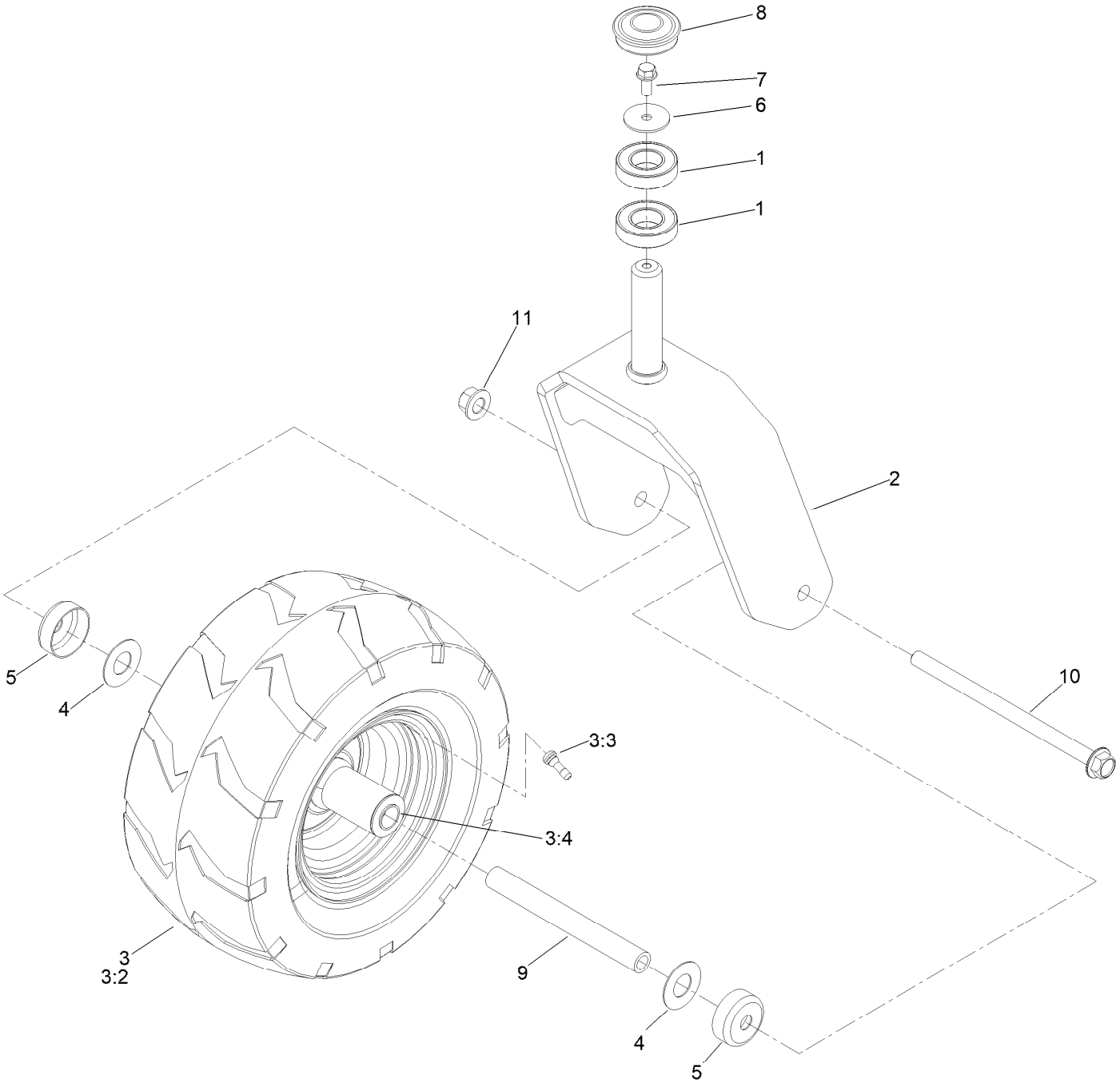

Caster Fork and Wheel Assembly (continued)

Ref.	Part Number	Qty.	Description
1	109-3678	4	Bearing-Ball
2	145-6375-01	2	Castor Fork [red]
3	147-7647	2	Tire And Wheel ASM
3:2	147-7648	1	Tire 13X6.5-6, Treaded
3:3	232-27	1	Stem-Valve
3:4	147-7652	2	Bearing
4	136-5590	4	Washer
5	138-7208	4	Guard-Seal
6	115-1151	2	Washer-Flat
7	100-1668	2	Screw-HHF
8	144-0375	2	Cap, Grease
9	133-4487	2	Spanner-Wheel
10	139-2559	2	Screw-HHF
11	139-1689	2	Nut-HF

Hydraulic Drive Assembly

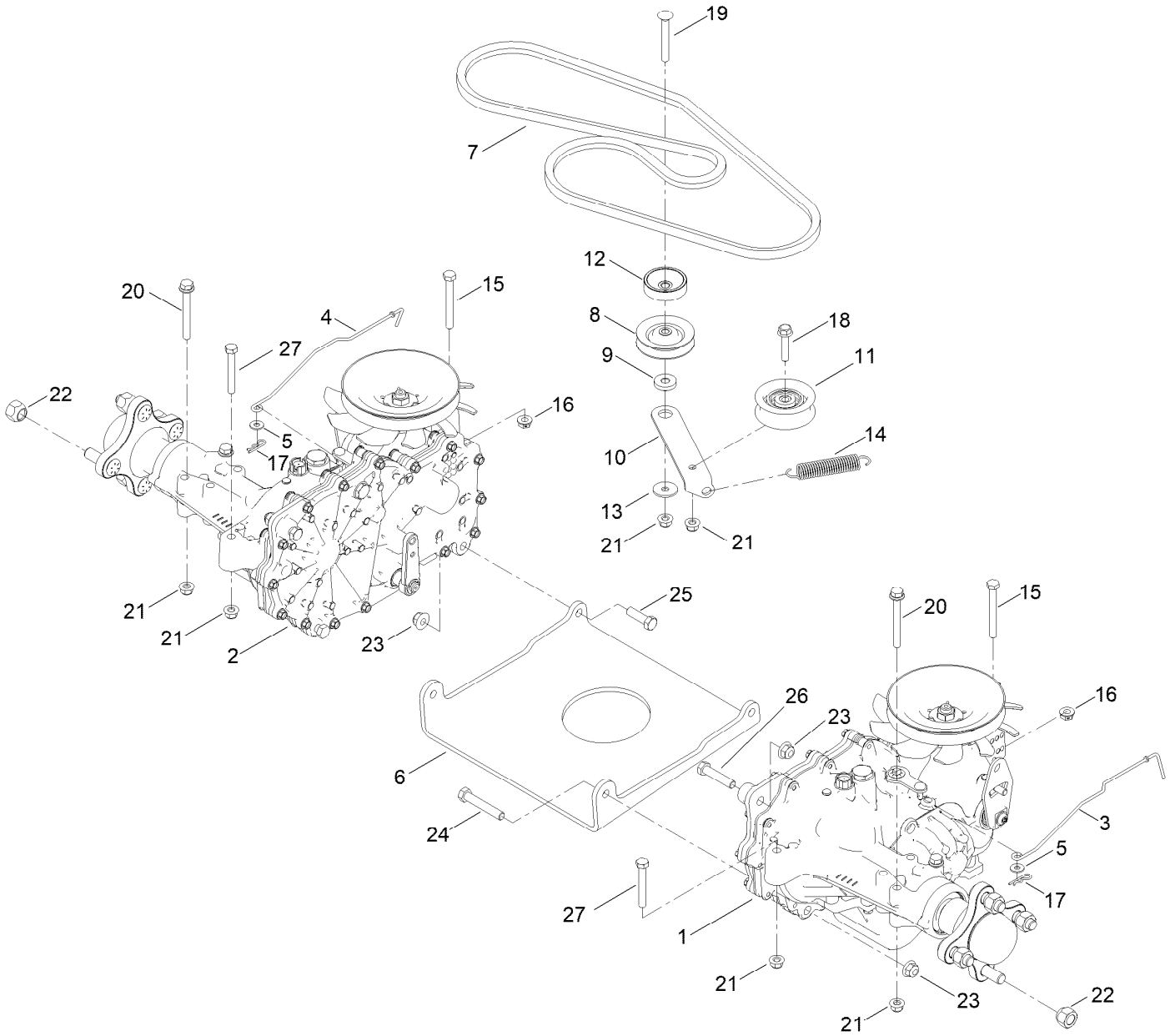

Hydraulic Drive Assembly (continued)

Ref.	Part Number	Qty.	Description
1	147-2860	1	LH Hydro Transmission ASM
2	147-2861	1	RH Hydro Transmission ASM
3	147-2987	1	Rod-Bypass, LH
4	147-2986	1	Rod-Bypass, RH
5	119-8952	2	Washer-Spcl
6	145-6383-03	1	Plate-Hydro
7	145-6363	1	V-Belt (A Sec 66.30 El)
8	68-0030	1	Idler
9	138-7277	1	Spacer-Arm, Idler
10	147-2925	1	Arm-Idler
11	138-7597	1	Pulley-Idler, Flat
12	138-9809	1	Spacer
13	5-4460	1	Washer-Pivot
14	137-7040	1	Spring-Return, Pedal
15	145-6388	2	Screw-HH Spcl
16	139-2574	2	Nut-HF
17	3290-307	2	Pin-Cotter
18	115-1794	1	Screw-HHF
19	3230-8	1	Screw-CARR
20	138-7590	4	Screw-HHF
21	104-8300	8	Nut-HF, NI
22	139-2564	8	Nut-Lug
23	104-8301	6	Nut-HF, NI
24	323-11	2	Screw-HH
25	323-7	2	Screw-HH
26	323-9	2	Screw-HH
27	322-11	2	Screw-HH

LH Hydro Transmission Assembly No. 147-2860

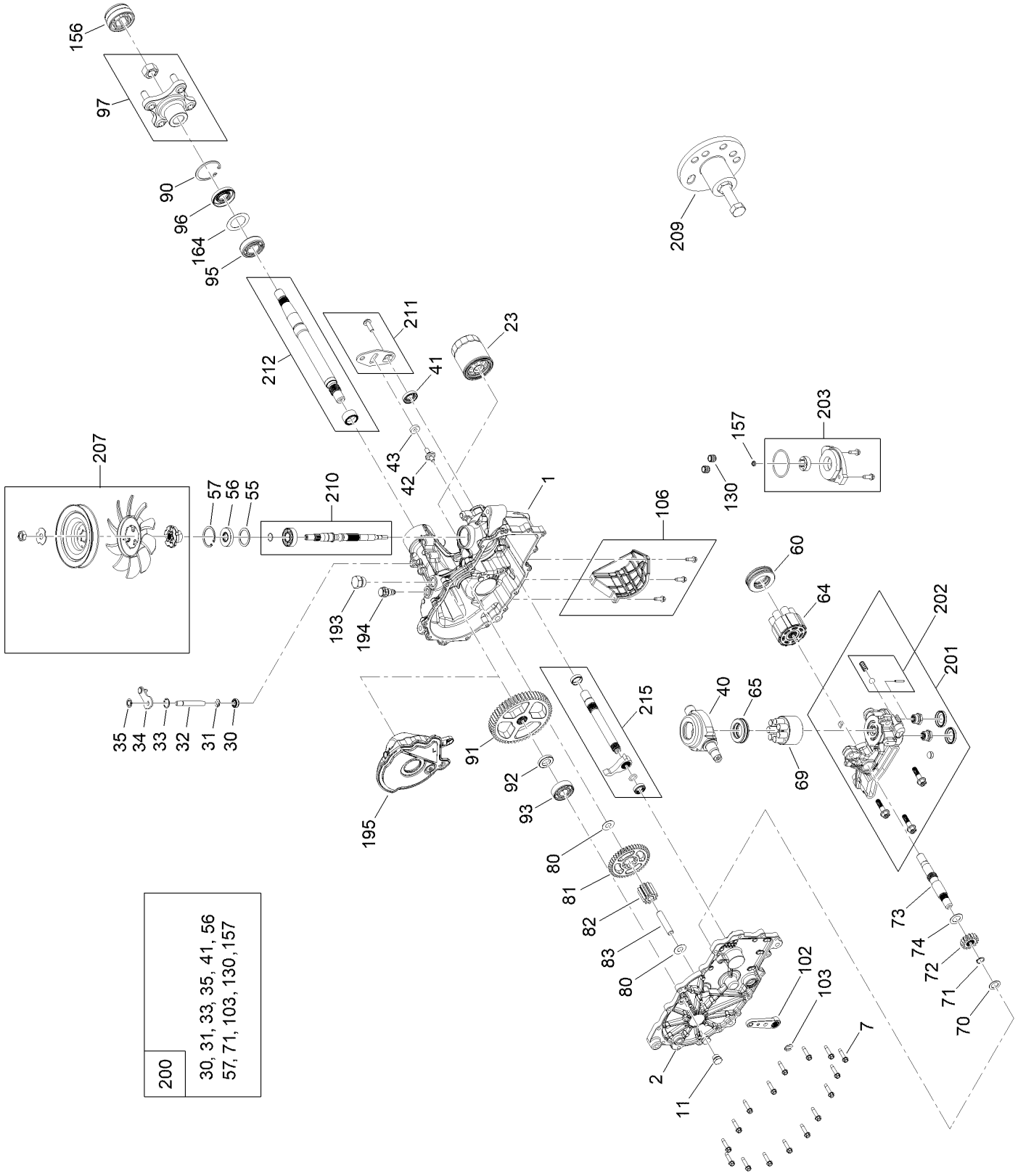

LH Hydro Transmission Assembly No. 147-2860 (continued)

Ref.	Part Number	Qty.	Description
1	140-8345	1	RH Main Housing Kit
2	140-8349	1	RH Side Cover Kit
7	117-5359	16	Screw-HHF
11	135-1140	1	Plug-Straight
23	109-3321	1	Element-Oil Filter, HYD
30	139-7497	1	Seal-Lip
31	106-8677	1	Ring-Retaining, External
32	114-1685	1	Rod-Bypass
33	106-8679	1	Ring-Retaining, Internal
34	112-9852	1	Arm-Bypass
35	106-8681	1	Ring-Retaining, External
40	104-5304	1	Swashplate-Trunnion
41	104-5313	1	Seal-Lip
42	104-2116	1	Stud
43	112-9853	1	Puck-Friction
55	104-5308	1	Spacer
56	104-5310	1	Seal-Lip
57	104-5309	1	Ring-Retaining
60	112-4154	1	Bearing-Thrust
64	139-4074	1	Cylinder Block ASM Kit
65	94-6922	1	Bearing-Thrust
69	110-8561	1	Pump Block ASM
70	104-5339	1	Washer-Flat
71	104-5340	1	Ring-Retaining
72	114-1690	1	Gear-14T
73	114-1691	1	Shaft-Motor
74	104-5360	1	Washer
80	94-1933	2	Washer
81	114-1692	1	Gear-45T
82	114-1693	1	Gear-11T
83	104-5329	1	Pin-Jackshaft
90	104-2169	1	Ring-Retaining
91	114-1694	1	Gear-54T
92	120-7975	1	Spacer
93	135-1361	1	Bearing-Ball
95	130-8477	1	Bearing-Ball
96	104-2144	1	Seal
97	109-5939	1	Hub Kit
102	125-0021	1	Handle-Brake
103	131-0906	1	Ring-Retaining, EXT
106	139-7499	1	Filter Guard Kit
130	126-3251	2	Tube-Charge
156	115-5057	1	Cover-Nut, Axle
157	126-1930	1	Gerotor Seal Kit
164	121-5745	1	Spacer
193	140-8343	1	Plug
194	140-8356	1	Breather Fitting ASM
195	140-8357	1	RH Internal Expansion Tank ASM
200	140-8351	1	Seal Kit
201	147-2906	1	Kit, Center Section, LH Charge
202	114-8464	1	Charge Relief Kit
203	114-8465	1	Charge Kit
207	135-7343	1	Fan And Pulley Kit
209	114-8467	1	Puller-Hub, 4 Bolt
210	139-7502	1	Input Shaft Kit
211	117-5362	1	Control Arm Kit
212	114-8470	1	Axle Shaft Kit
215	140-8352	1	Inboard Kit

RH Hydro Transmission Assembly No. 147-2861

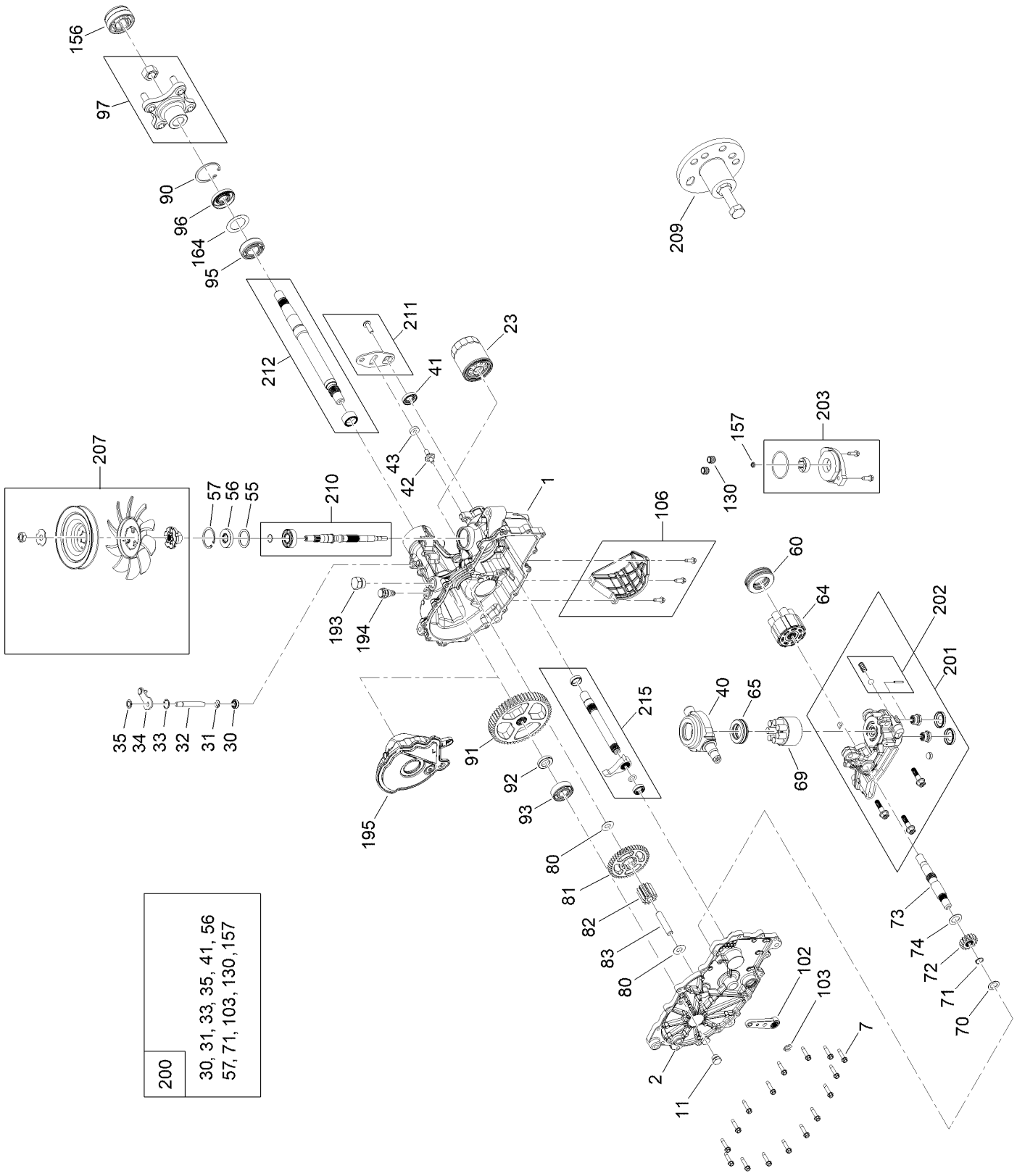

RH Hydro Transmission Assembly No. 147-2861 (continued)

Ref.	Part Number	Qty.	Description
1	140-8347	1	LH Main Housing Kit
2	140-8350	1	LH Side Cover Kit
7	117-5359	16	Screw-HHF
11	135-1140	1	Plug-Straight
23	109-3321	1	Element-Oil Filter, HYD
30	139-7497	1	Seal-Lip
31	106-8677	1	Ring-Retaining, External
32	114-1685	1	Rod-Bypass
33	106-8679	1	Ring-Retaining, Internal
34	107-2490	1	Arm-Bypass
35	106-8681	1	Ring-Retaining, External
40	104-5304	1	Swashplate-Trunnion
41	104-5313	1	Seal-Lip
42	104-2116	1	Stud
43	112-9853	1	Puck-Friction
55	104-5308	1	Spacer
56	104-5310	1	Seal-Lip
57	104-5309	1	Ring-Retaining
60	112-4154	1	Bearing-Thrust
64	139-4074	1	Cylinder Block ASM Kit
65	94-6922	1	Bearing-Thrust
69	110-8561	1	Pump Block ASM
70	104-5339	1	Washer-Flat
71	104-5340	1	Ring-Retaining
72	114-1690	1	Gear-14T
73	114-1691	1	Shaft-Motor
74	104-5360	1	Washer
80	94-1933	2	Washer
81	114-1692	1	Gear-45T
82	114-1693	1	Gear-11T
83	104-5329	1	Pin-Jackshaft
90	104-2169	1	Ring-Retaining
91	114-1694	1	Gear-54T
92	120-7975	1	Spacer
93	135-1361	1	Bearing-Ball
95	130-8477	1	Bearing-Ball
96	104-2144	1	Seal
97	109-5939	1	Hub Kit
102	125-0021	1	Handle-Brake
103	131-0906	1	Ring-Retaining, EXT
106	139-7498	1	Filter Guard Kit
130	126-3251	2	Tube-Charge
156	115-5057	1	Cover-Nut, Axle
157	126-1930	1	Gerotor Seal Kit
164	121-5745	1	Spacer
193	140-8343	1	Plug
194	140-8356	1	Breather Fitting ASM
195	140-8358	1	LH Internal Expansion Tank ASM
200	140-8351	1	Seal Kit
201	147-2907	1	Kit, Center Section, RH Charge
202	114-8464	1	Charge Relief Kit
203	114-8465	1	Charge Kit
207	135-7343	1	Fan And Pulley Kit
209	114-8467	1	Puller-Hub, 4 Bolt
210	139-7502	1	Input Shaft Kit
211	117-5362	1	Control Arm Kit
212	114-8470	1	Axle Shaft Kit
215	140-8353	1	Inboard Kit

Parking Brake Assembly

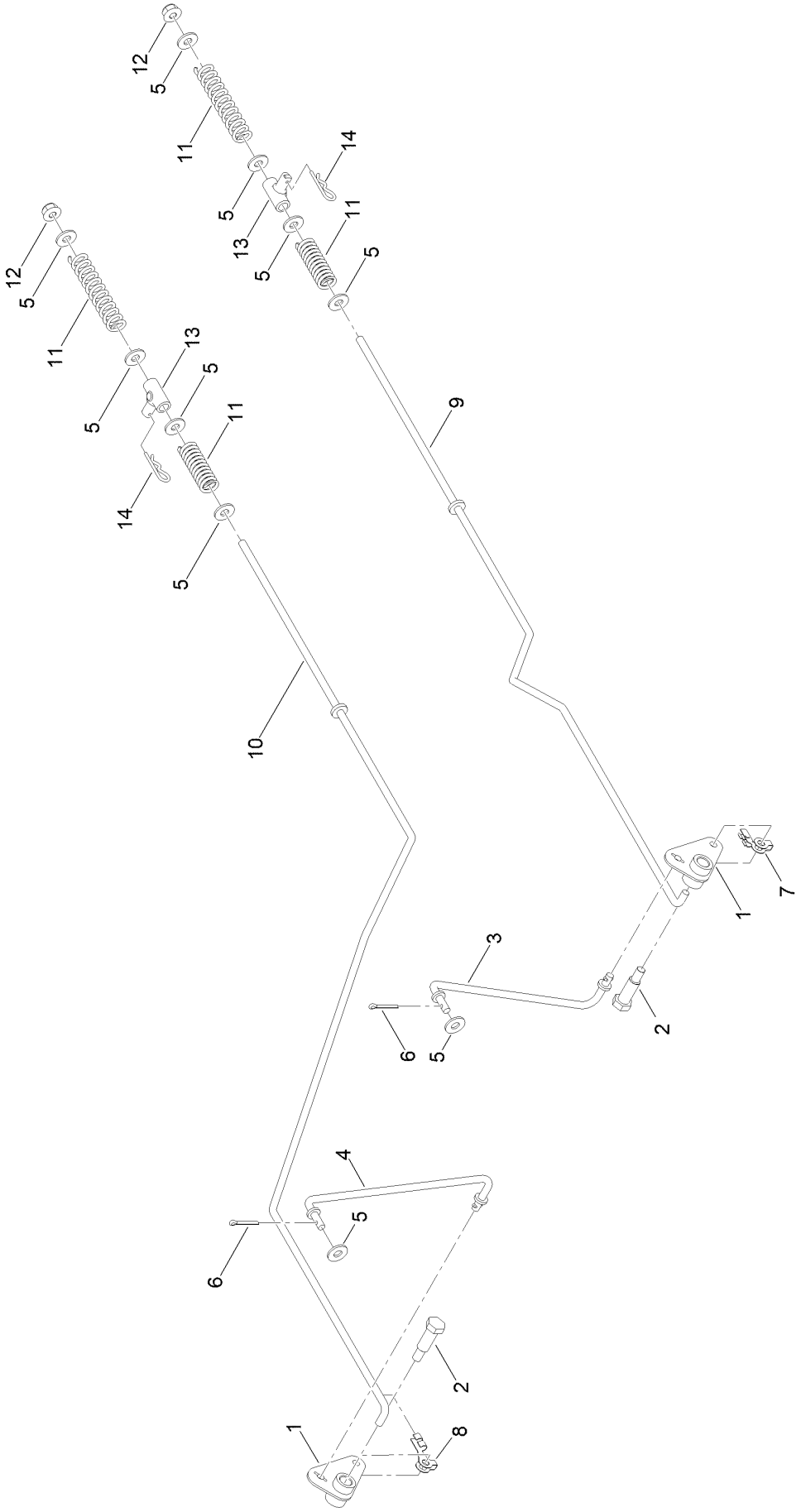

Parking Brake Assembly (continued)

Ref.	Part Number	Qty.	Description
1	161-6420	2	Bellcrank
2	145-6364	2	Bolt-Shoulder
3	145-4607	1	Link-Brake, LH
4	145-6238	1	Link-Brake, RH
5	119-8952	10	Washer-Spcl
6	120-9716	2	Pin-Cotter
7	144-1816	1	Clip-Rod, LH (7L, 1/4In)
8	144-1815	1	Clip-Rod, RH (7R, 1/4In)
9	145-0408	1	Rod-Brake LH
10	145-0407	1	Rod-Brake, RH
11	138-7252	4	Spring-Compression
12	119-4040	2	Nut-HF, NI
13	119-8857	2	Mount-Pivot
14	137-3083	2	Pin-Hair

Rear Wheel Assembly

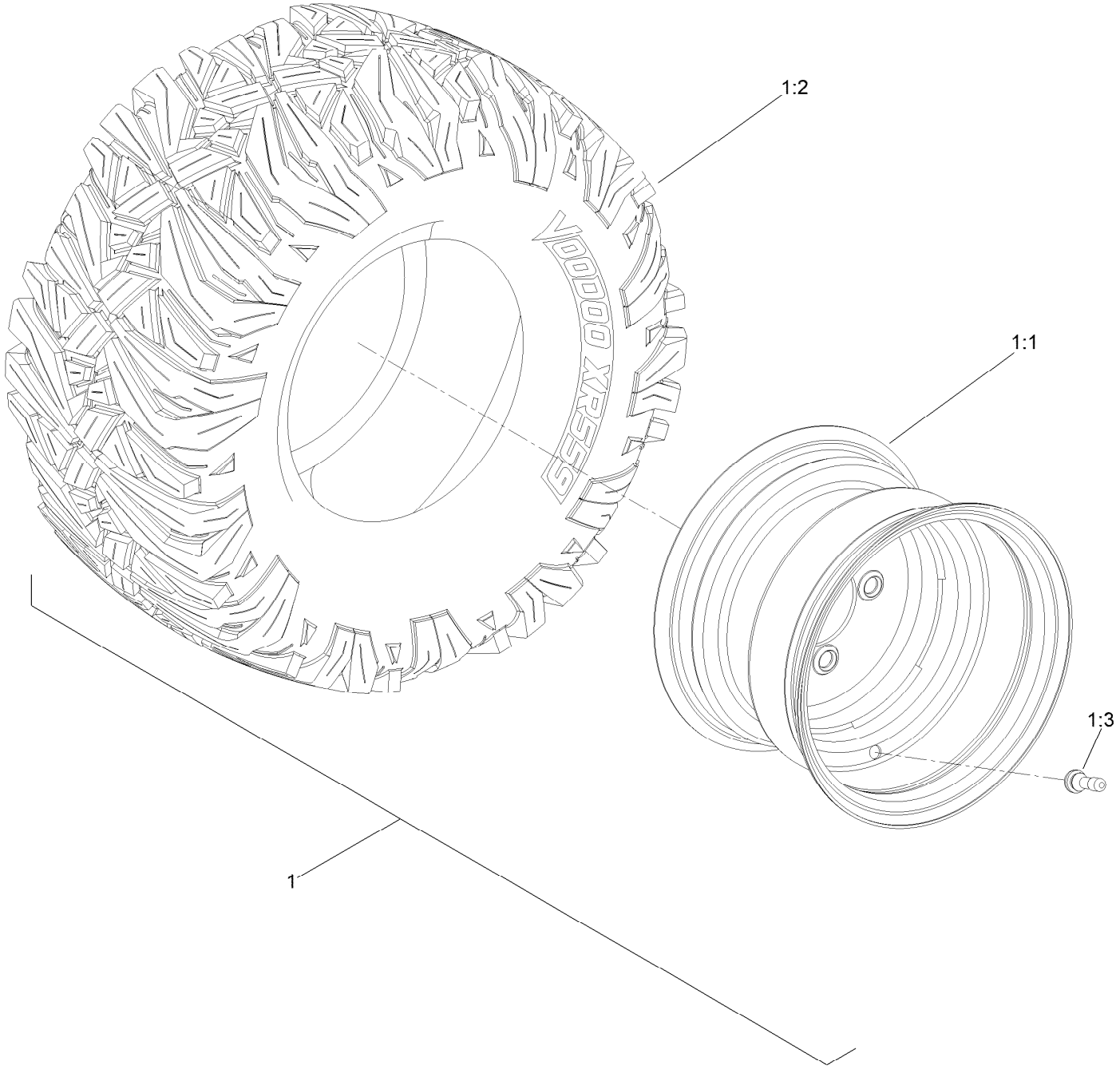

Rear Wheel Assembly (continued)

Ref.	Part Number	Qty.	Description
1	145-6393	2	Tire ASM-22X11-10 Nos2.4
1:1	147-5178	1	Rim
1:2	147-5177	1	Tire
1:3	232-27	1	Stem-Valve

Motion Control Assembly

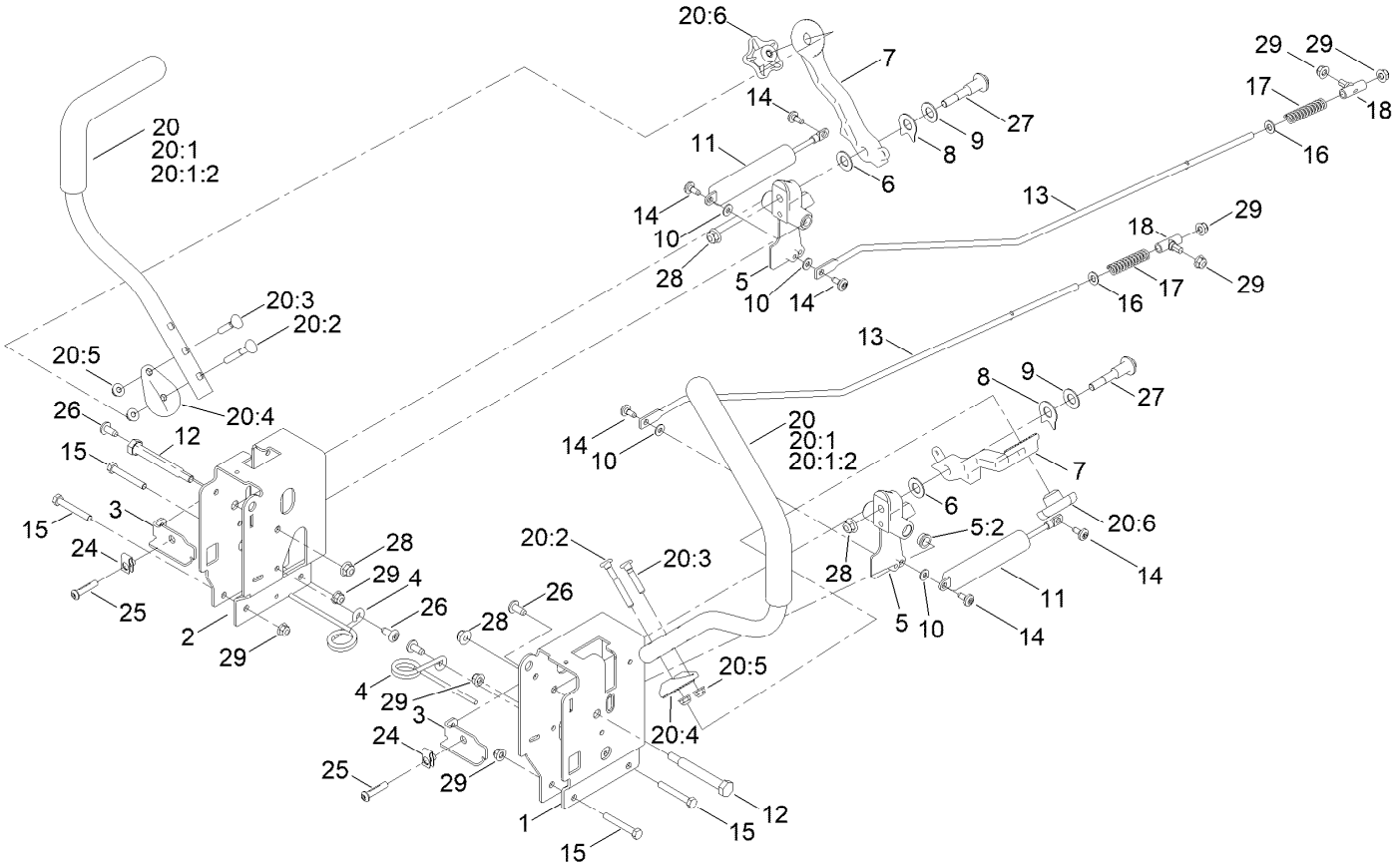

Motion Control Assembly (continued)

Ref.	Part Number	Qty.	Description
1	145-4615-03	1	Control Box - LH G7
2	145-4647-03	1	Control Box - RH G7
3	147-7580-03	2	Adjustment Plate-Control Box
4	145-6253	2	Spring-Torsion
5	145-4648	2	Pivot Arm ASM
5:2	256-156	2	Bushing-Flange
6	120-2273	2	Washer-Flat
7	147-5191-05	2	Arm-Control, 32 Teeth
8	142-8478	2	Spacer, Anti-Rotation
9	119-8925	2	Washer-Belleville
10	119-8952	4	Washer-Spcl
11	161-6514	2	Damper - Non Cavitating
12	115-5099	2	Bolt-Pivot
13	161-9725	2	Rod-Hydro
14	120-7950	6	Screw-Torx
15	322-11	4	Screw-HH
16	120-9683	2	Washer-Plain
17	138-7252	2	Spring-Compression
18	138-7218	2	Mount-Rod, Hydro
20	161-6523	2	Handle-Control, ASM
20:1		1	Handle-Control, ●
20:1:2	147-3029	1	Grip
20:2	145-6366	1	Screw-Handle
20:3	137-3008	1	Screw-Handle
20:4	147-5192-05	1	Disc-Adjustment Handle, 32 Teeth
20:5	138-8401	2	Nut-HF
20:6	117-5976	1	Knob-Handle
24	112-3306	2	Nut
25	126-4299	2	Screw-HSBH
26	138-9753	4	Screw
27	117-1198	2	Bolt-Pivot
28	104-8301	4	Nut-HF, NI
29	104-8300	8	Nut-HF, NI

● Not serviced separately

Engine and Muffler Assembly

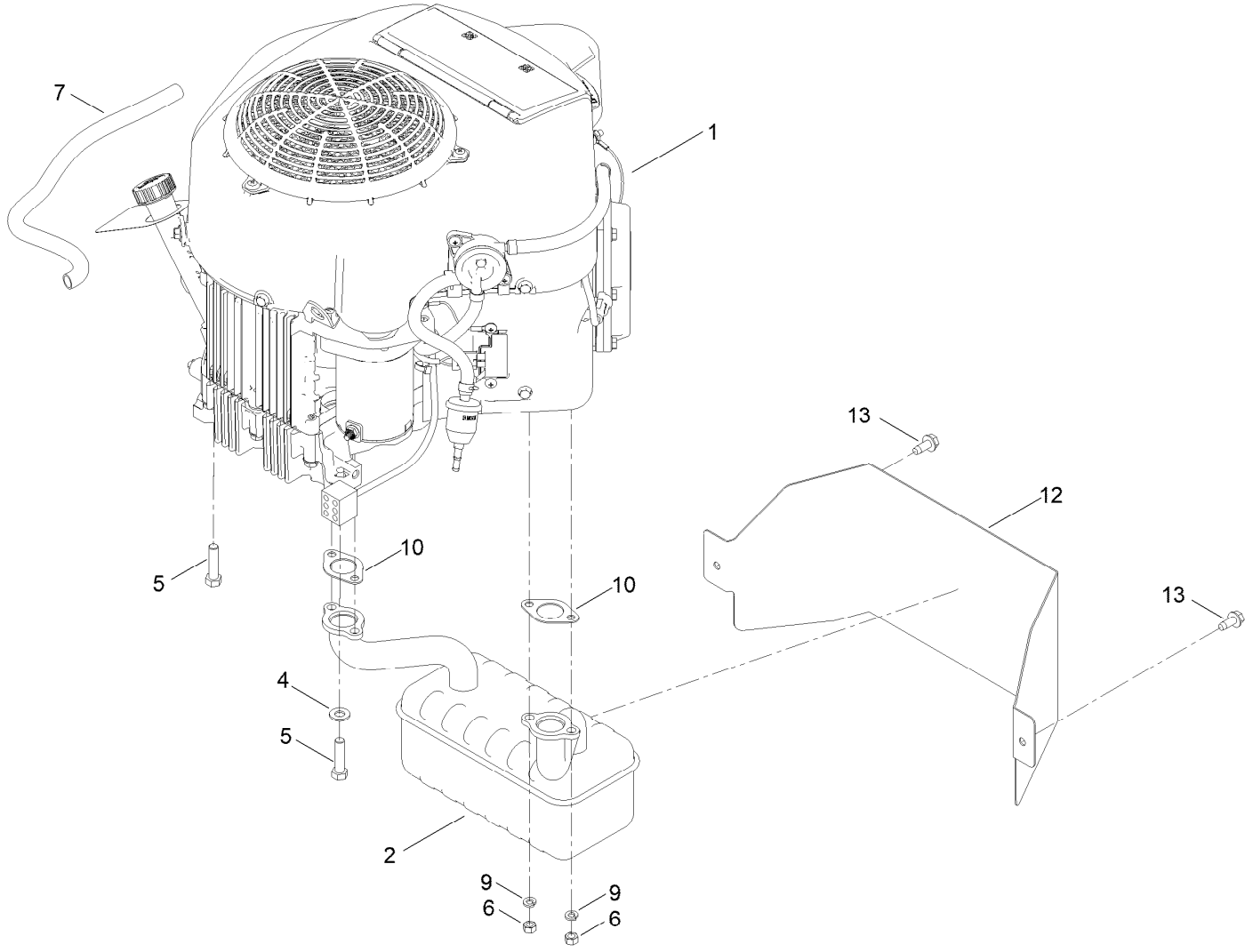

Engine and Muffler Assembly (continued)

Ref.	Part Number	Qty.	Description
1		1	Engine-Kawasaki, Fr730V-S09-R ●■
2	139-5867	1	Muffler
4	3256-24	3	Washer-Plain
5	323-50	4	Bolt-HH
6	114-3549	4	Nut
7	106-7022	1	Tube-Drain, Oil
9	114-3550	4	Washer-Lock
10	1-653313	2	Gasket-Exhaust
12	161-6221-03	1	Heat Shield-Muffler
13	32144-70	2	Screw-HWHTF

● Not serviced separately

■ Obtain parts from www.kawpower.com

Styling Pod Assembly

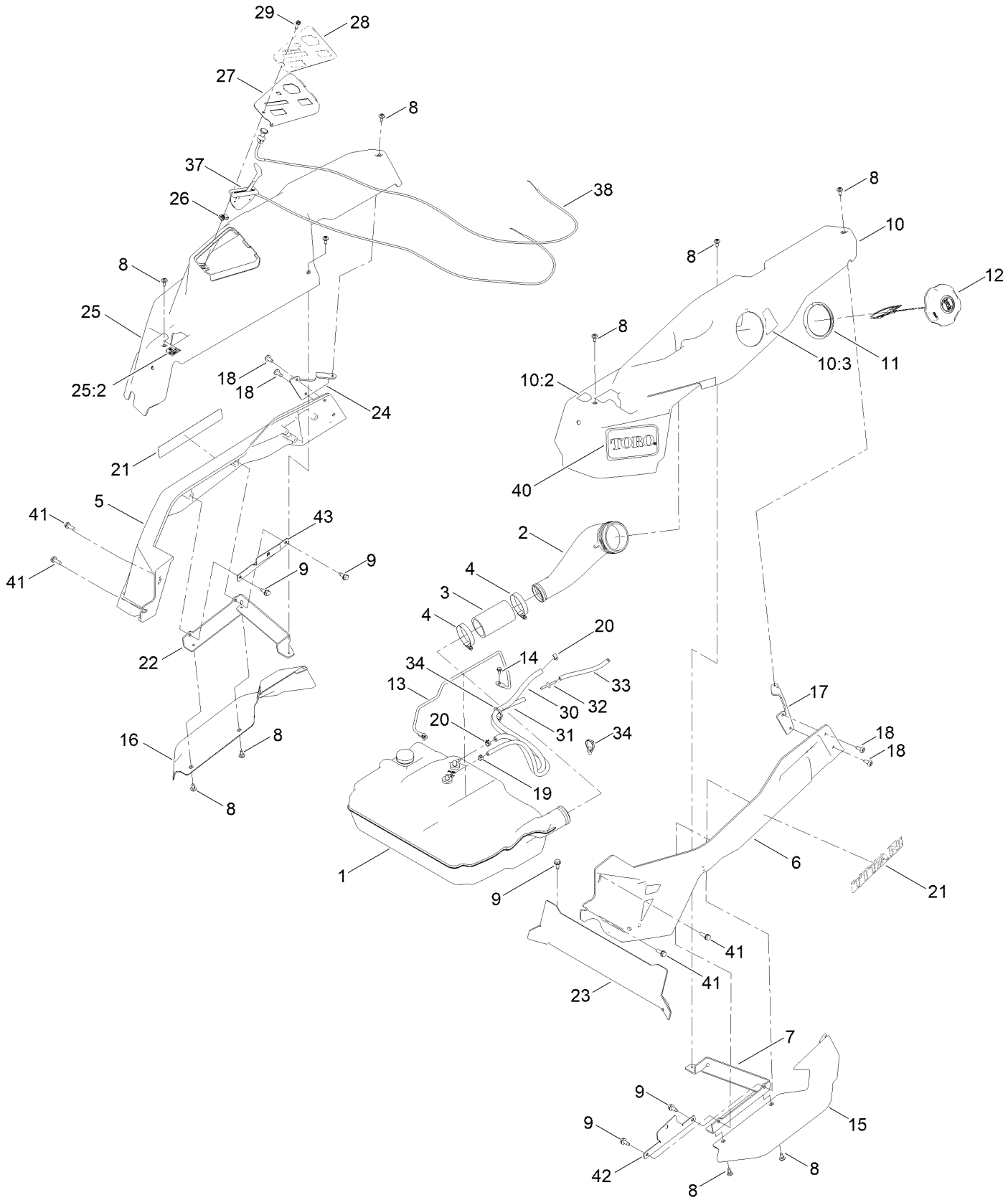

Styling Pod Assembly (continued)

Ref.	Part Number	Qty.	Description
1	147-5288	1	Tank ASM - Fuel
2	147-7657	1	Neck-Filler, Fuel
3	145-4698	1	Hose-Filler, Fuel
4	2412-130	2	Clamp-Hose
5	147-2973-01	1	Cast-Tube, RH
6	147-2972-01	1	Cast-Tube, LH
7	147-2974-03	1	Mount-Pod Bracket LH
8	120-7950	10	Screw-Torx
9	32144-70	6	Screw-HWHTF
10	147-8741	1	Pod ASM - LH W/Decals
10:2	139-2395	1	Decal-Control Lever, LH
10:3	147-2399	1	Decal-Fuel Fill
11	147-7712	1	Ring-Retaining
12	137-4119	1	Cap-Fuel, Ratcheting
13	147-5176	1	Rod-Hold Down
14	32144-4	2	Screw-HWH
15	147-2978	1	Fender-Time Cutter, LH
16	147-2979	1	Fender-Time Cutter, RH
17	147-2976-03	1	Bracket-Rear Pod, LH
18	138-9753	4	Screw
19	2412-80	1	Clamp-Hose
20	2412-98	2	Clamp-Hose
21	147-7566	2	Decal-Titan
22	147-2975-03	1	Mount-Pod Bracket RH
23	147-5170-03	1	Plate-Kick
24	147-2977-03	1	Mount-Pod Bracket RH
25	147-8742	1	Pod ASM - RH W/Decals
25:2	139-2394	1	Decal-Control Lever, RH
26	107069	1	Clip
27	147-2990-03	1	Panel-Control
28	147-7571	1	Decal - Control Panel
29	49-2040	1	Screw-HWHTF
30	109-0284	1	Hose-Fuel
31	140-4956	1	Hose-Fuel
32	144-1983	1	Adapter Orifice
33	115-7872	1	Hose-Fuel
34	32180-030	2	Clip-Tie
37	139-5808	1	Cable-Throttle
38	147-2902	1	Cable-Choke
40	147-7714	2	Decal - Toro Logo
41	32144-41	4	Screw-Taptite
42	161-4609-03	1	Bracket-Alignment, Pod LH
43	161-4610-03	1	Bracket- Alignment, Pod RH

Fuel Tank Assembly No. 147-5288

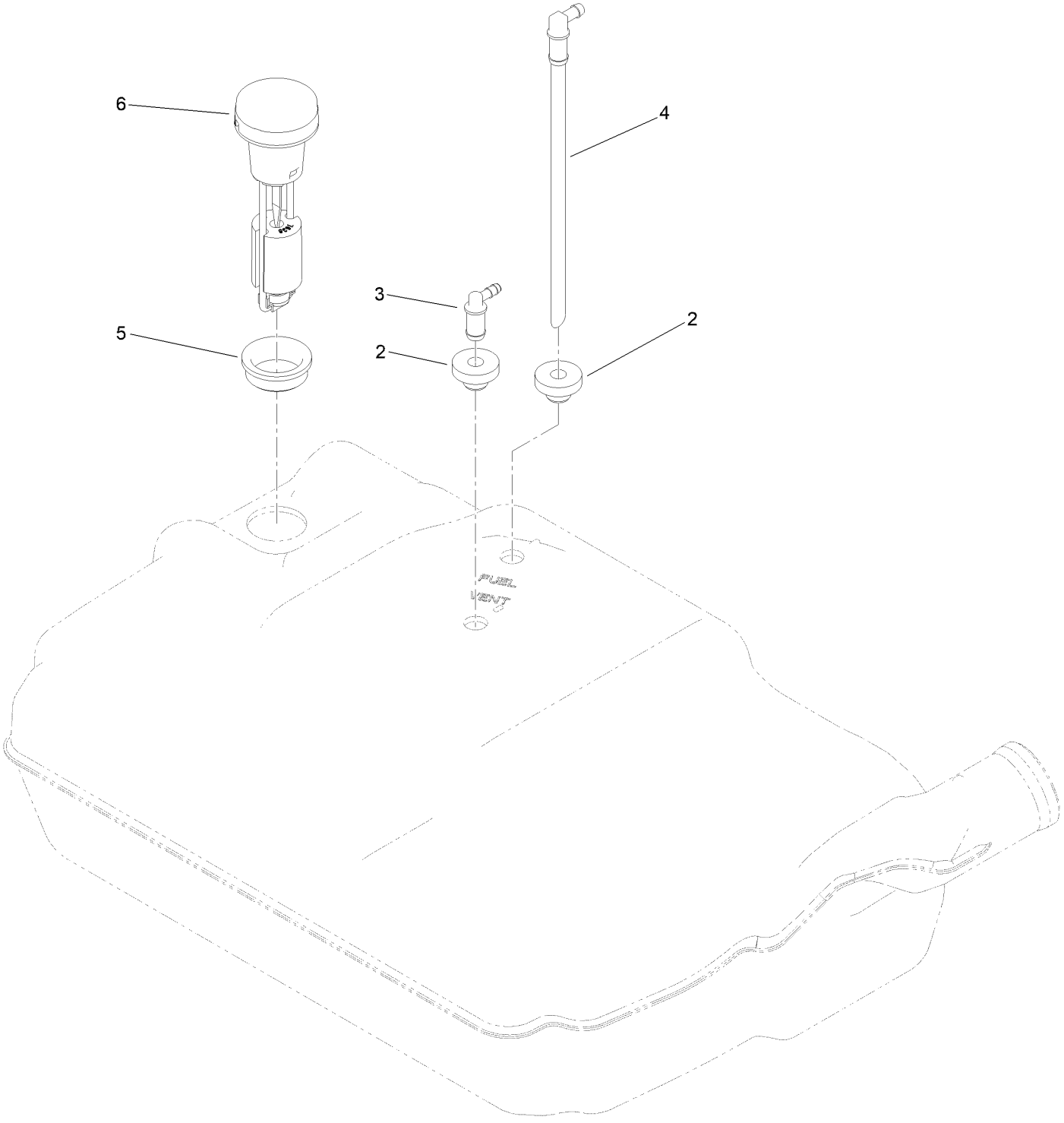

Fuel Tank Assembly No. 147-5288 (continued)

Ref.	Part Number	Qty.	Description
2	46-6560	2	Bushing
3	144-5302	1	Fitting-Elbow 90
4	147-2934	1	Fitting-Pickup, Fuel
5	133-9269	1	Grommet-Fuel
6	147-5166	1	Remote Gauge ASM

Electrical Assembly

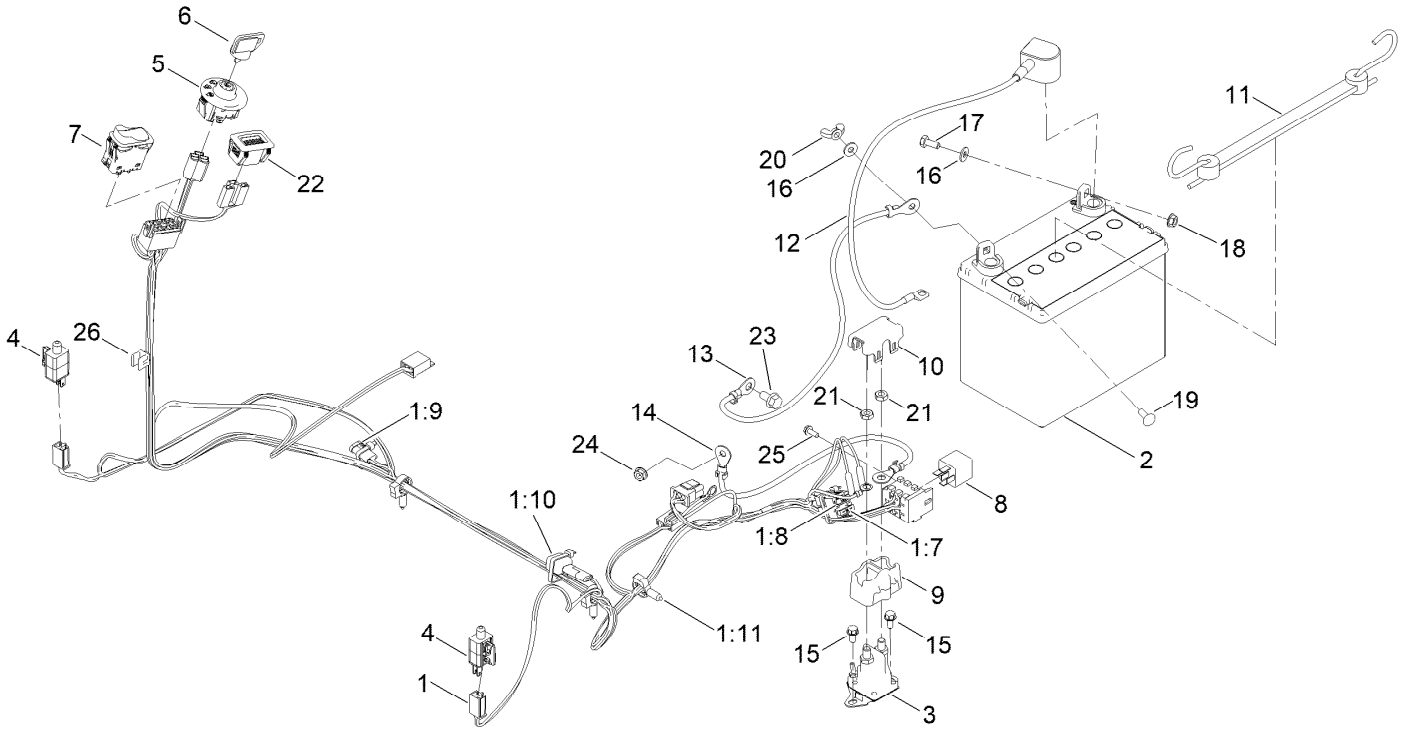

Electrical Assembly (continued)

Ref.	Part Number	Qty.	Description
1	145-6382	1	Harness-Wire, Main
1:7	109355	1	Fuse-Blade, 15 Amp
1:8	109102	1	Fuse-Blade, 25 Amp
1:9	32160-029	1	Connector-Molded, 1F,1M
1:10	100-4918	1	Diode
1:11	32180-047	3	Clip-Tubing, Harness
2		1	Battery- Wet, 12V, 300 CCA ●■
3	117-1197	1	Solenoid
4	110-6765	2	Switch
5	137-4100	1	Switch-Ignition
6	63-8360	1	Key-Ignition
7	139-6368	1	Switch-Rocker, On-None-On
8	1-643275	1	Relay
9	140-2080	1	Cover-Solenoid
10	140-2081	1	Cap-Solenoid
11	104-2466	1	Holddown-Battery
12	147-2941	1	Cable-Battery,Red
13	119-8899	1	Cable-Battery, Black
14	121-0711	1	Cable-Battery, Positive
15	32144-4	2	Screw-HWH
16	119-8952	2	Washer-Spcl
17	137-3041	1	Screw-HH
18	139-2575	1	Nut-HF
19	137-3053	1	Screw-CARR
20	32103-22	1	Nut-Wing
21	139-2580	2	Nut-HJ
22	139-6404	1	Hour Meter
23	33104-016	1	Screw-HHF
24	32128-33	1	Nut-HF
25	139-1713	1	Screw-Thd Roll
26	32180-082	1	Clip-Edge W/Tie, Perpendicular

● Obtain locally.

■ Not serviced separately

60 Inch Deck and Decal Assembly

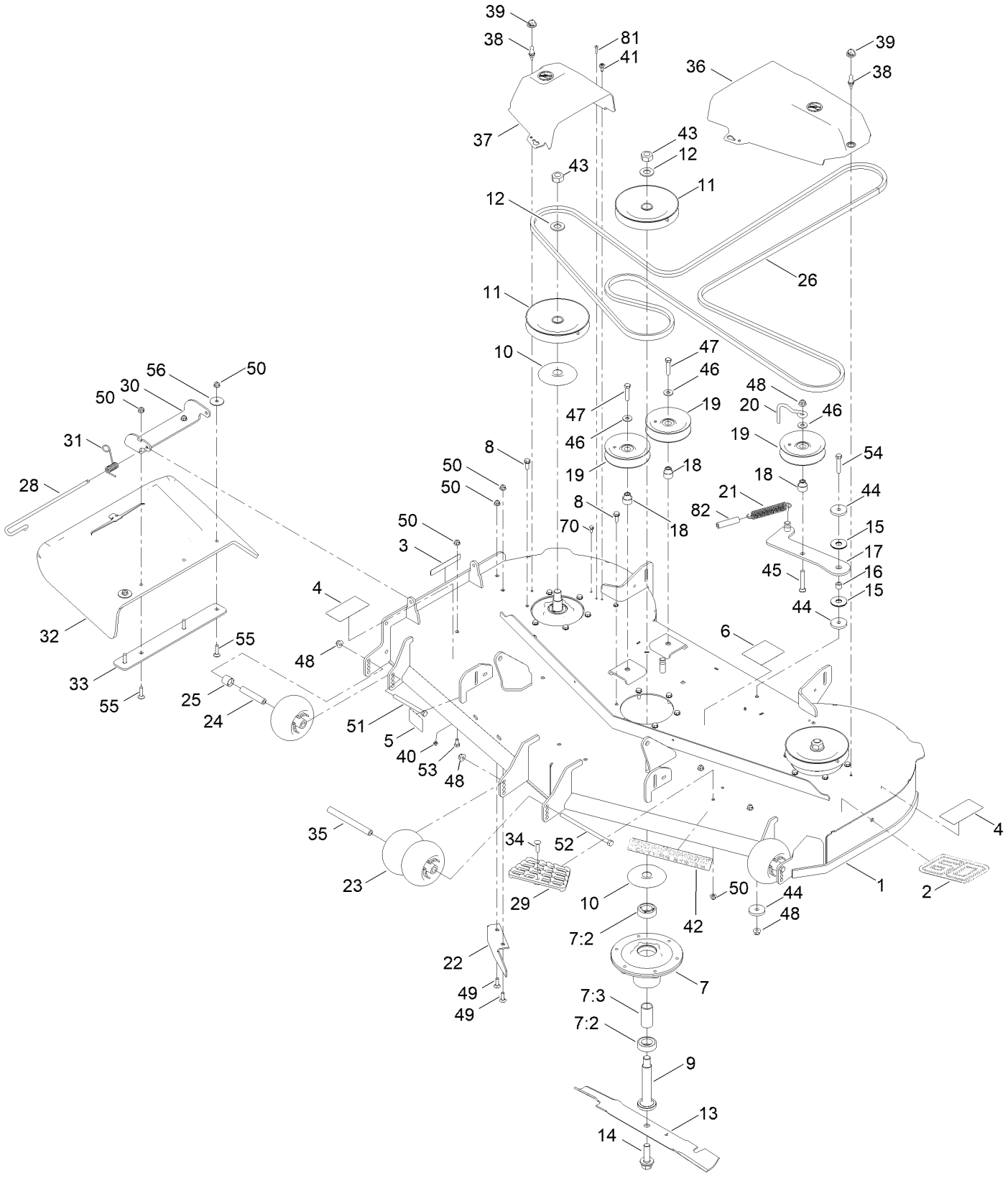

60 Inch Deck and Decal Assembly (continued)

Ref.	Part Number	Qty.	Description
1	147-8751	1	60 In Deck & Decal ASM
2	147-7570	1	Decal - Deck 60
3	130-0731	1	Decal-Danger
4	132-0872	2	Decal-Danger, Deck
5	130-0765	1	Decal-Scalp, Anti
6	117-1194	1	Decal-Routing, Belt
7	139-2357	3	Spindle ASM
7:2	116-0720	2	Bearing-Ball
7:3	138-7220	1	Spacer-Bearing
8	32144-41	18	Screw-Taptite
9	115-2642	3	Shaft-Spindle
10	138-7221	3	Shield-Bearing
11	147-7674	3	Pulley
12	7-4150	3	Washer
13	115-9649-03	3	Blade-Hi Flow
14	145-0412	3	Screw-Blade
15	114-0463	2	Washer-Friction, Composite
16	138-7225	1	Spacer
17	145-7038	1	Idler Arm ASM
18	138-7227	3	Bushing-Idler
19	132-4718	3	Pulley-Idler, Flat
20	136-5615	1	Guide-Belt, Idler
21	138-7228	1	Spring-Extension
22	119-3388-03	1	Baffle-Cutoff
23	1-603299	4	Roller-Scalp, Anti
24	138-7229	2	Tube-Spanner
25	104-0892	2	Spacer-Axle, Rear
26	133-1168	1	Belt-V
28	138-7231	1	Pin-Chute
29	126-4781-03	1	Step-Deck
30	114-1648-03	1	Bracket-Deflector, Upper
31	138-7232	1	Spring-Torsion
32	147-3015	1	Deflector - Molded
33	115-5048-03	1	Plate-Deflector
34	139-1702	1	Bolt-Carriage
35	98-5967	1	Spacer-Wheel
36	147-2854	1	Cover-Belt, LH
37	147-2853	1	Cover-Belt, RH
38	147-2872	2	Stud-Ball
39	147-2871	2	Grommet-Ball
40	115-7373	2	Nut-Lock
41	120-7950	4	Screw-Torx
42	147-7567	1	Decal - Iron Forged
43	3219-7	3	Nut-Hex
44	110-9981	3	Washer-Plain
45	3231-31	1	Screw-CARR
46	80-6990	3	Washer-Hardened
47	323-9	2	Screw-HH
48	104-8301	5	Nut-HF, NI
49	3230-22	2	Screw-CARR
50	104-8300	10	Nut-HF, NI
51	323-23	2	Screw-HH
52	108-5388	1	Screw-HH
53	322-2	3	Screw-HH
54	323-10	1	Screw-HH
55	3230-3	4	Screw-CARR
56	3256-68	2	Washer-Flat
70	32144-4	4	Screw-HWH
81	130-8451	4	Rivet-Trifold
82	99-7375	1	Hose-Breather

Deck Decal Assembly No. 147-8751

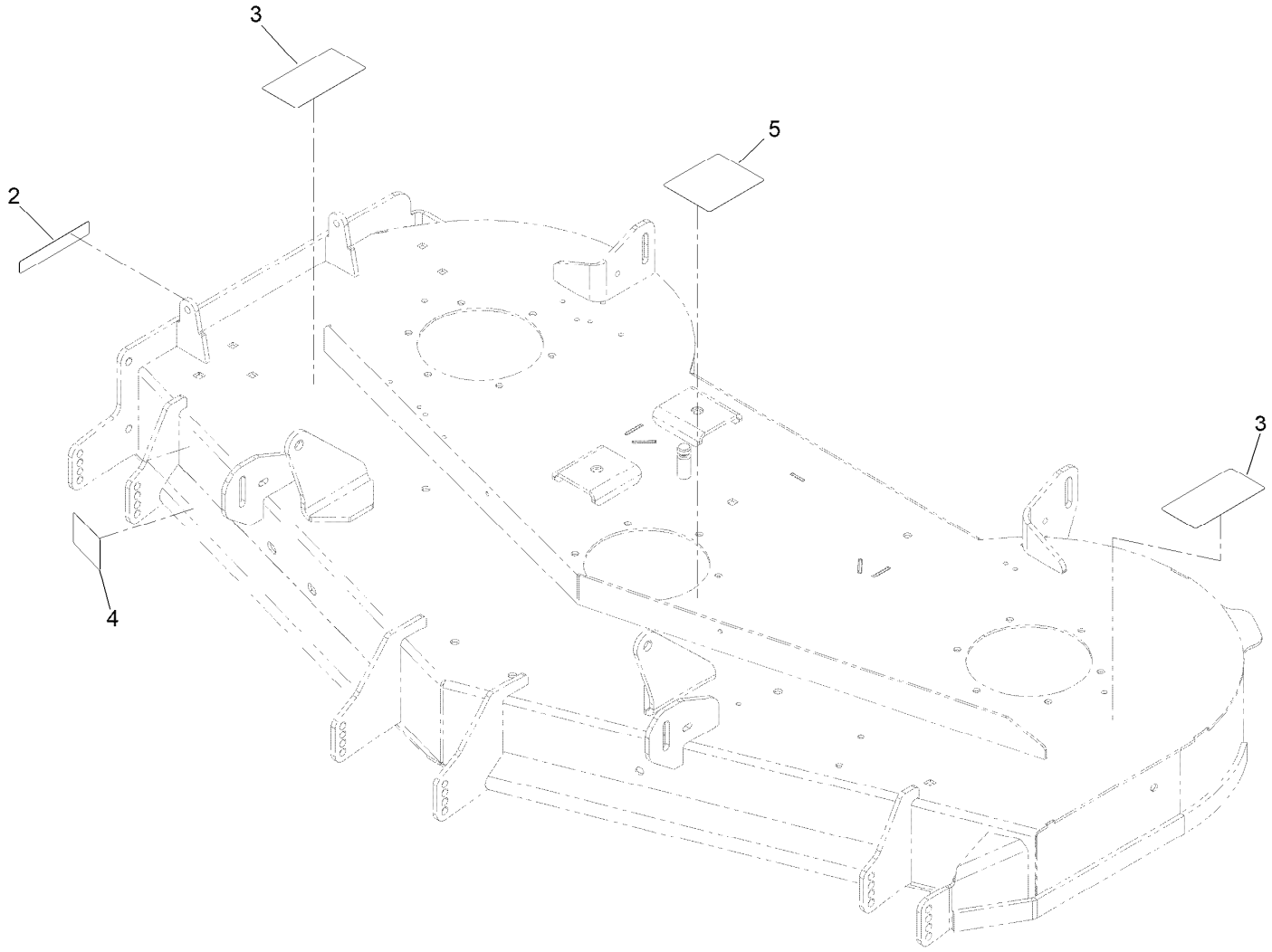

Deck Decal Assembly No. 147-8751 (continued)

Ref.	Part Number	Qty.	Description
2	130-0731	1	Decal-Danger
3	132-0872	2	Decal-Danger, Deck
4	130-0765	1	Decal-Scalp, Anti
5	117-1194	1	Decal-Routing, Belt

Model Specific Assembly

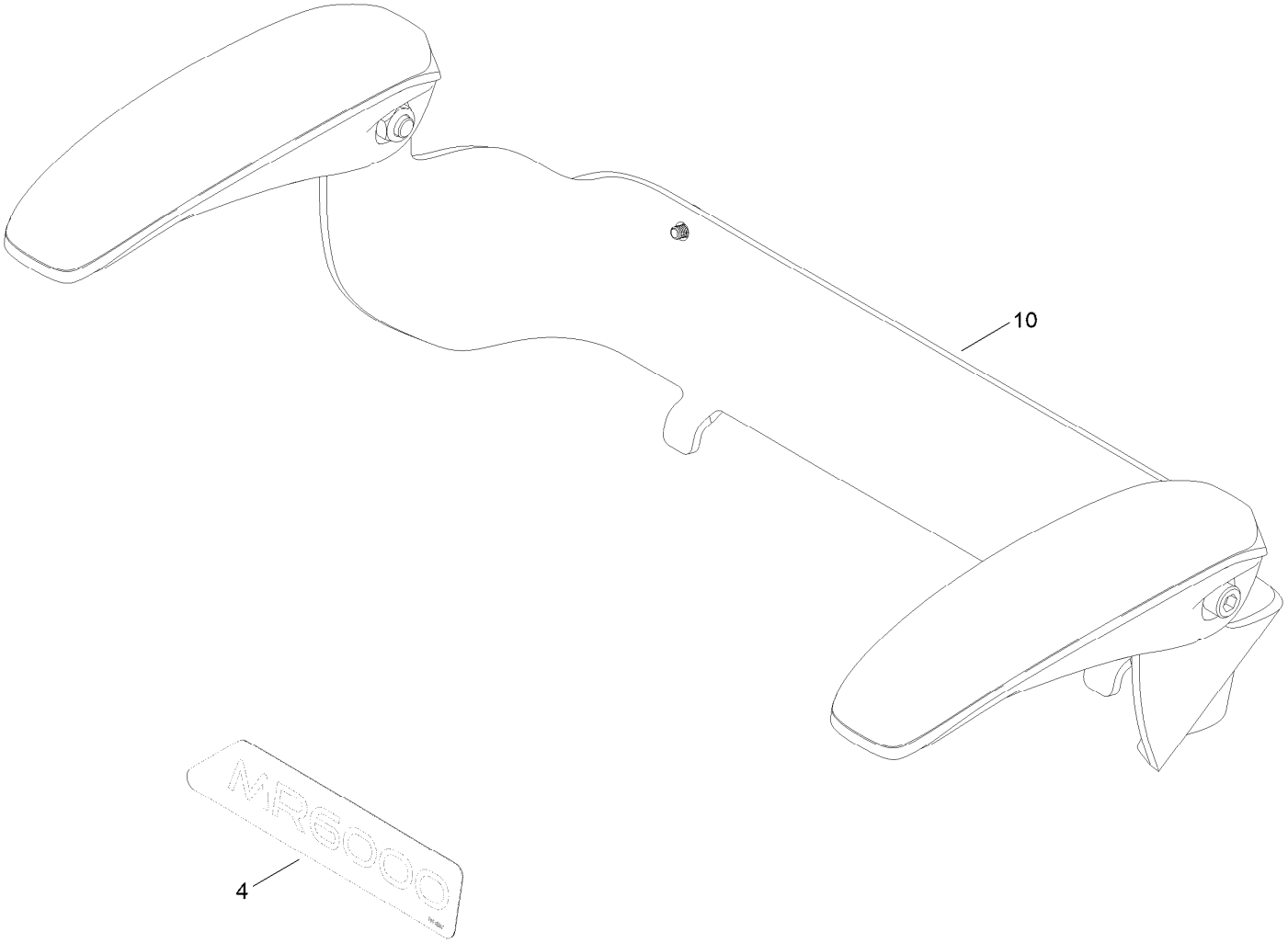

Model Specific Assembly (continued)

Ref.	*Part Number*	*Qty.*	*Description*
4	161-4557	1	Decal Mr6000
10	161-4567	1	Kit-Arm Rest

Seat Pan Assembly

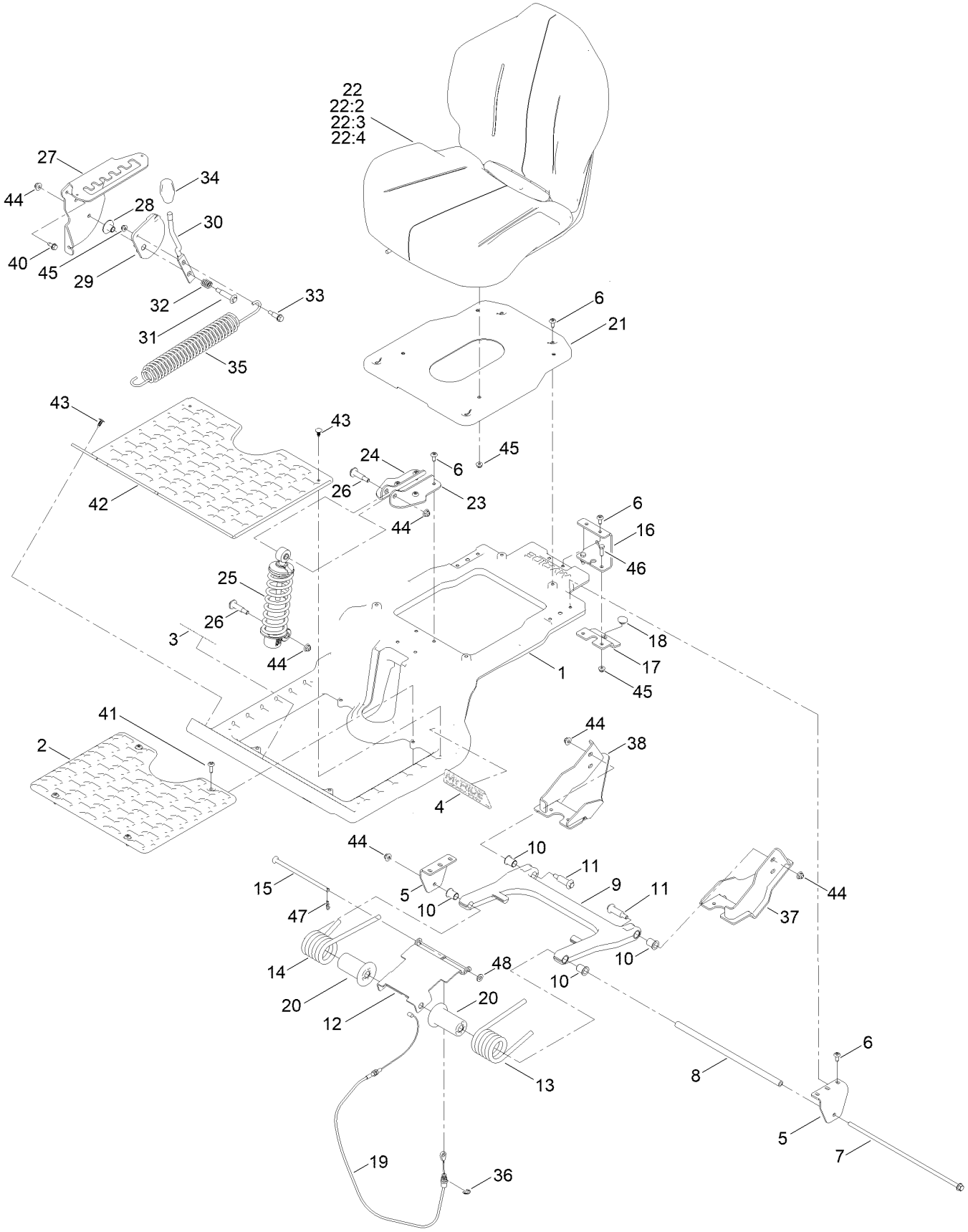

Seat Pan Assembly (continued)

Ref.	Part Number	Qty.	Description
1	145-6394-05	1	Platform, Myride
2	145-6395-05	1	Platform, Myride
3	147-7662	1	Decal - Myride
4	147-7575	1	Decal - Myride
5	138-7517	2	Bracket-Mount, Swing Arm
6	138-9753	14	Screw
7	138-7548	1	Screw-HHF
8	138-7549	1	Tube-Spacer
9	145-6312	1	Arm-Swing
10	138-2573	4	Bushing-Flange
11	138-2547	2	Bolt-Shoulder
12	138-7566-03	1	Plate-Adjuster
13	137-1983	1	Spring-Torsion, LH
14	137-7018	1	Spring-Torsion, RH
15	138-9813	1	Rod-Adjustment
16	138-9788	1	Bracket-Cable
17	139-2361-03	1	Bracket Lower
18	135-0505	1	Bumper-Seat
19	147-7713	1	Cable-Adjustment, Myride
20	138-9776	2	Retainer-Spring
21	147-7690-03	1	Pan-Seat [black]
22	163-6012	1	Seat ASM - Milsco Cs180D
22:2	161-4566	1	Kit-Adjuster
22:3	82-2190	1	Switch-Bail
22:4	163-6015	1	Cover-Seat
23	133-9318-03	1	Bracket-Shock Mount, Upper (LH)
24	133-9319-03	1	Bracket-Shock Mount, Upper (RH)
25	139-2427	1	Shock/Spring ASM
26	136-7198	2	Bolt-Shoulder
27	145-6309-01	1	Bracket-Mr Gate
28	139-5800	1	Bushing - Flange
29	147-5171	1	Pulley-Cam
30	147-5172	1	Lever-Adjustment, Threaded
31	92-1057	1	Bolt-Shoulder
32	139-5858	1	Spring-Compression
33	140-3759	1	Bolt-Shoulder,HHF
34	147-8715	1	Knob-Mr
35	138-9848	1	Spring-Extension
36	32120-47	1	Ring-Retaining, External
37	147-8721-03	1	Mount-Mr Swing Arm, LH
38	147-8722-03	1	Mount-Mr Swing Arm, RH
40	32144-70	3	Screw-HWHTF
41	147-7606	4	Screw-Spcl
42	147-7724	1	Floor Mat
43	117-2382	4	Plug-Plastic
44	119-4042	6	Nut-HF, NI
45	119-4041	7	Nut-HF
46	139-1716	2	Screw-HH
47	137-3083	1	Pin-Hair
48	115-1166	1	Washer-Plain

Clutch Assembly

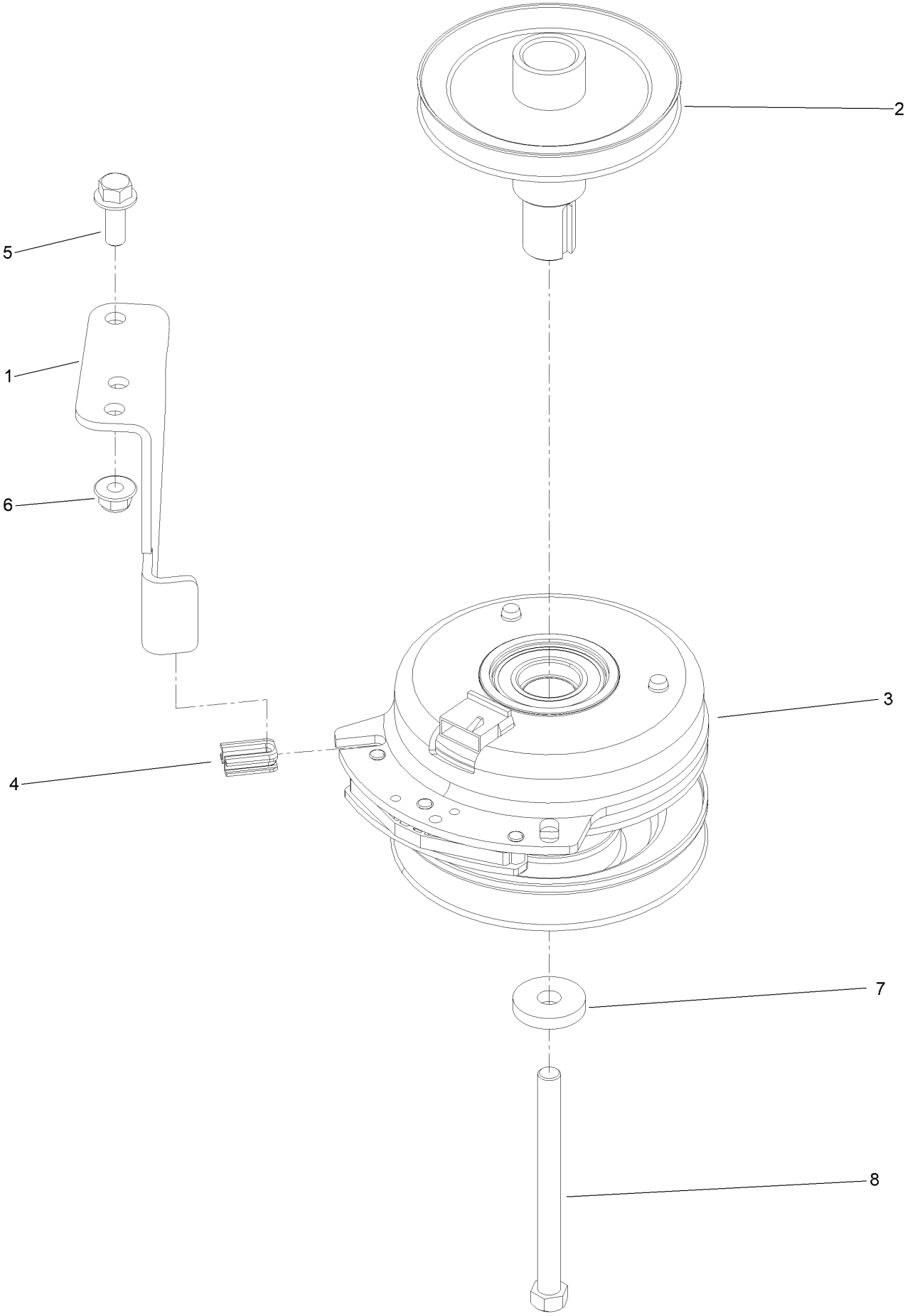

Clutch Assembly (continued)

Ref.	Part Number	Qty.	Description
1	137-7000	1	Stop-Clutch (Wide)
2	138-9831	1	Pulley-Engine
3	127-3410	1	Clutch-PTO
4	120-2217	1	Isolator-Clutch
5	3234-42	1	Screw-HHF
6	104-8301	1	Nut-HF, NI
7	112843	1	Washer
8	3212-19	1	Screw-HH

Attachments and Accessories

For 76660TA Titan MR6000 Zero Turn Riding Mower

Product Name	Model/Part
Hypr-Oil 500 (quart)	114-4713
Blade-Hi Flow, 20.5in	115-9649-03P
Jack Kit	127-6666
Fuel Stabilizer .05 oz	130-2393
4-Cycle Fuel, Snow And Lawn 32oz Can	131-3823
Toro Premium Fuel Treatment 12oz Bottle	131-6572
60in Recycler Kit	136-7490
Oil-30/10W-30 Synthetic (Quart)	138-6053
HD Bagger Cover Kit	140-5036
Leaf Bagging Enhancement Kit	140-5122
Hydro Service Kit	144-5347
Flat Free Caster Wheel Kit	145-0489
Led Light Kit	147-8757
Kit-Striping, 54/60in	147-8781
Mount, Jack Titan	147-8824
Assist Bar Kit	161-4450
Heavy Duty Spring Kit	161-4525
10W30 4-Cycle Engine Oil (32oz Bottle)	38280
Toro 4-Cycle SAE 30 Oil (32oz Bottle)	38903
Toro Deluxe Rider Cover	490-7319
Powered Bagger, Titan Models ROHS	79348
ROPS Kit	79487
Slope Sensor Kit	79489

Notes:

Notes:

Notes:



Count on it.