Form No. 3423-106 Rev B

Power Harness Kit

Reelmaster® 5000 Series or Groundsmaster® 4300 Series Traction Unit

Model No. 138-2994

Installation Instructions

Installation

Loose Parts

Use the chart below to verify that all parts have been shipped.

Procedure	Description	Qty.	Use
1	No parts required	–	Prepare the machine.
2	No parts required	–	Disconnect the battery.
3	Power harness Fuse (10 A) Maxifuse (60 A) Solenoid	1 1 1 1	Prepare the power harness.
4	No parts required	–	Route the power harness.
5	No parts required	–	Connect the neutral switch to the power harness.
6	No parts required	–	Connect the sunshade harness to the power harness.
7	No parts required	–	Connect the power harness ring terminals.
8	Cable tie	6	Secure the power harness to the machine.
9	No parts required	–	Connect the battery.

© 2025—The Toro® Company
8111 Lyndale Avenue South
Bloomington, MN 55420

Register at www.Toro.com.

Original Instructions (EN)
Printed in the USA
All Rights Reserved

3423-106

1

Preparing the Machine

No Parts Required

Procedure

⚠ CAUTION

If you leave the key in the ignition switch, someone could accidently start the engine and seriously injure you or bystanders.

Remove the key from the ignition switch before you do any maintenance.

1. Park the machine on a level surface, disengage the PTO, lower the cutting units, and engage the parking brake.
2. Shut off the engine, remove the key, wait for all moving parts to stop, and allow the engine to cool.

2

Disconnecting the Battery

No Parts Required

Procedure

⚠ DANGER

Battery electrolyte contains sulfuric acid, which is fatal if consumed and causes severe burns.

- **Do not drink electrolyte and avoid contact with skin, eyes, or clothing.**
- **Wear safety glasses and rubber gloves.**
- **Fill the battery where clean water is always available for flushing the skin.**

1. For models 03950, 03952, 03954, 03956, and 30879, open the screen.
2. For models 03964 and 03966, open the hood.
3. Remove the cover from the battery tray by pressing the sides of the battery cover.
4. Disconnect the negative battery cable.
5. Slide the insulator cover off the positive battery-cable clamp, and disconnect the positive battery cable.

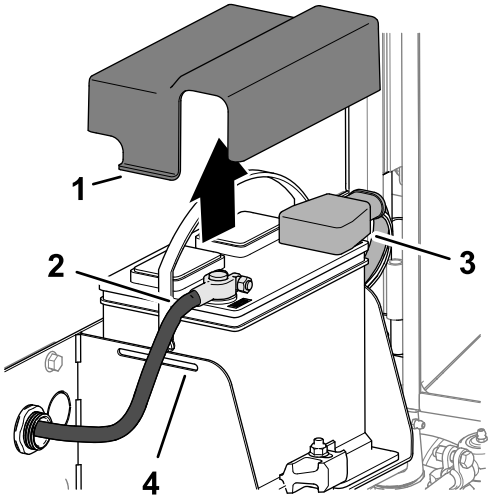

Figure 1

1. Cover
2. Negative battery cable
3. Positive battery cable
4. Battery tray

6. For models 03950, 03952, 03954, 03956, and 30879, close the screen and open the hood.

3

Preparing the Power Harness

Parts needed for this procedure:

1	Power harness
1	Fuse (10 A)
1	Maxifuse (60 A)
1	Solenoid

Procedure

1. Insert the maxifuse (60 A) into the large 2-slot fuse holder of the power harness (Figure 2).

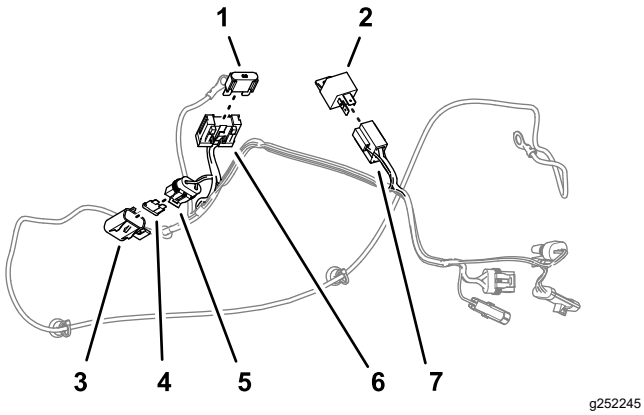

Figure 2

1. Maxifuse (60 A)
2. Solenoid
3. Cover (small fuse holder)
4. Fuse (10 A)
5. Small fuse holder (power harness)
6. 2-slot fuse holder (power harness)
7. 4-slot connector (power harness)

2. Remove the cover from the small fuse holder (Figure 2).
3. Insert the fuse (10 A) into the small fuse holder and install the cover (Figure 2).
4. Insert the solenoid into the 4-slot connector (Figure 2).

4

Routing the Power Harness

No Parts Required

Procedure

Important: **Route the power harness away from exhaust components and moving parts.**

1. At the left side of the machine, route the pin connectors and socket connectors between the engine and the frame of the machine (Figure 3).

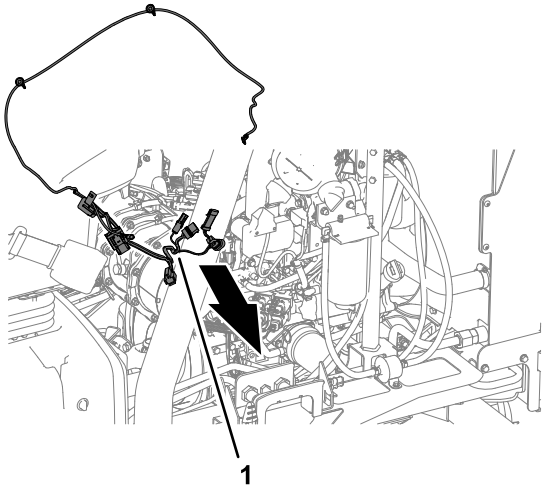

Figure 3

1. Power harness

2. Route the ring terminal labeled BATTERY – forward along the left side of the engine (Figure 4).

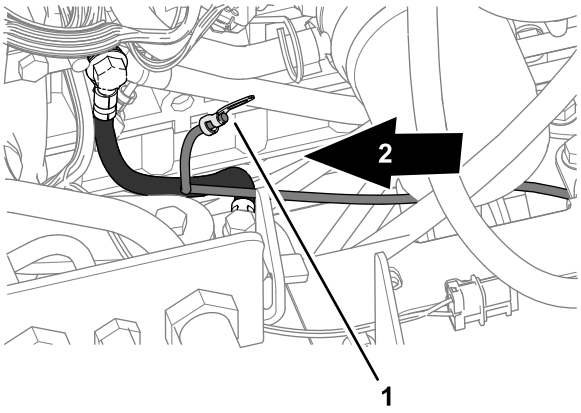

Figure 4

1. Ring terminal—power harness (BATTERY –)
2. Front of the machine

3. Route the power harness rearward and across the rear-axle plate as shown in Figure 5.

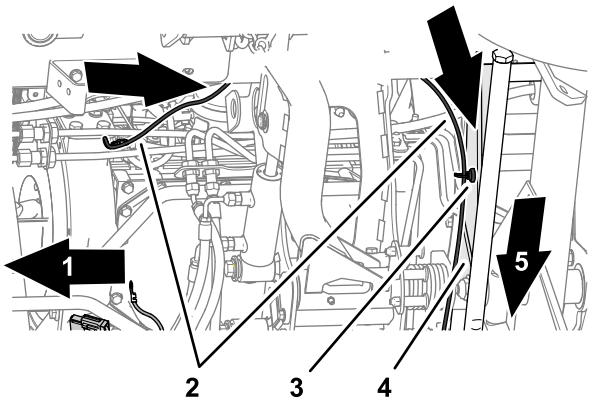

g252424

Figure 5

1. Front of the machine
2. Power harness
3. Magnetic harness mount
4. Rear-axle plate
5. Right side of the machine

4. Secure the power harness to the rear-axle plate with the 2 magnetic harness mounts as shown in Figure 6.

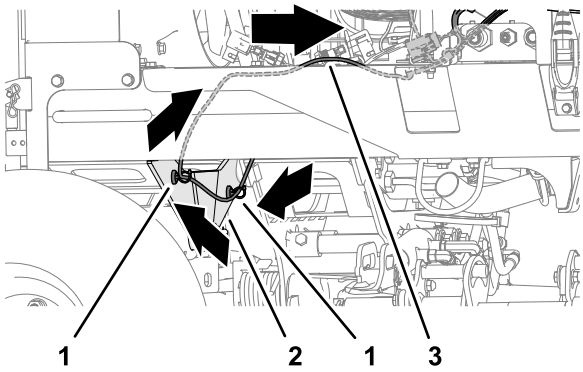

g252425

Figure 6

1. Magnetic harness mount
2. Rear-axle plate
3. Power harness

5. Route the power harness forward along the wire harness of the machine (Figure 7 or Figure 8).

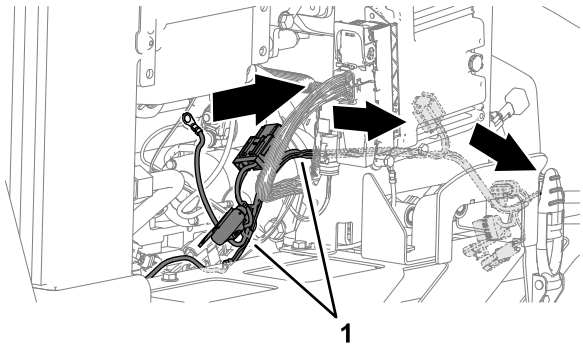

g252426

Figure 7

1. Power harness

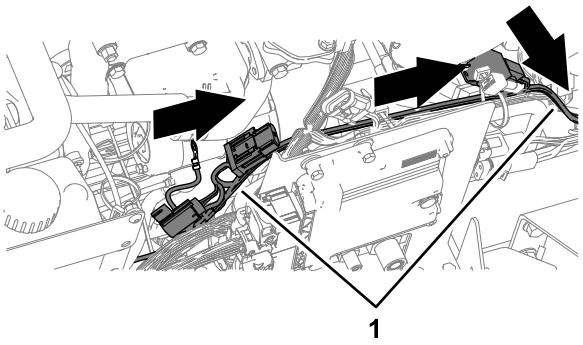

g252428

Figure 8

1. Power harness

6. Route the power harness downward near the front of the engine (Figure 7 or Figure 8).
7. At the bottom of the machine, route the power harness forward (Figure 9).

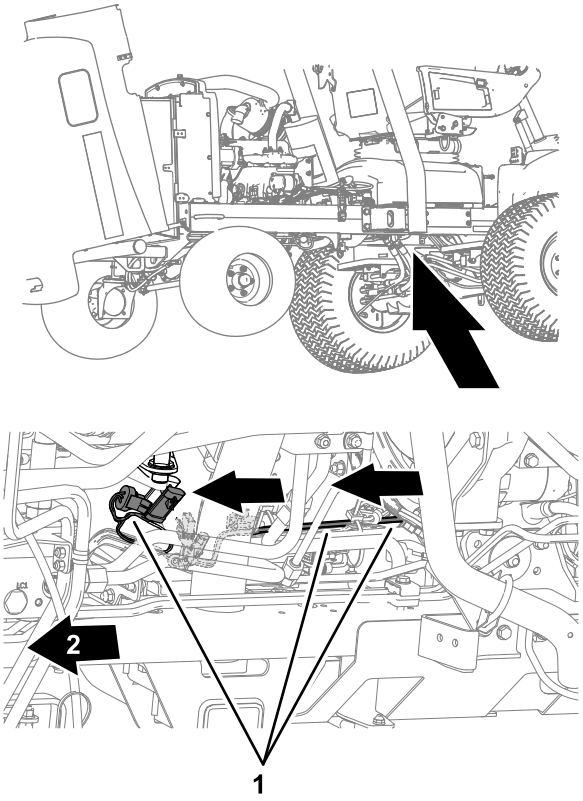

g252440
g252427

Figure 9

1. Power harness
2. Front of machine

5

Connecting the Neutral Switch to the Power Harness

No Parts Required

Procedure

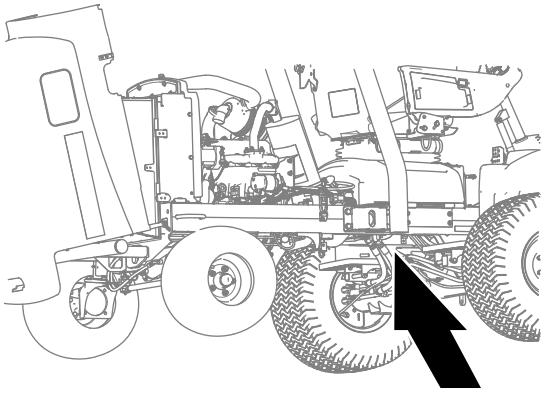

g252440

Figure 10

1. Disconnect the 3-socket connect of the neutral switch from the 3-pin connector of the machine wire harness (Figure 11).

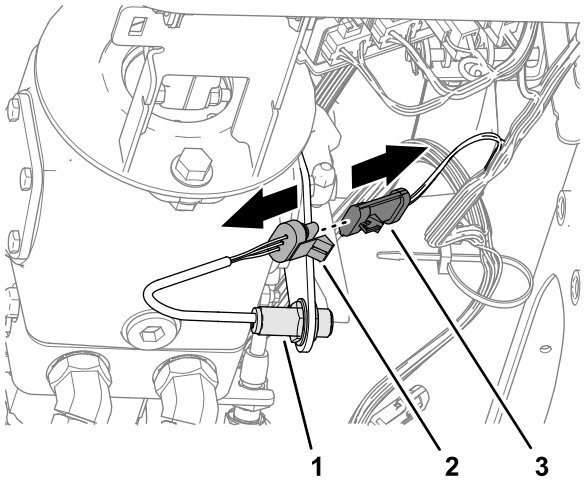

g252452

Figure 11

1. Neutral switch
2. 3-socket connect (neutral switch)
3. 3-pin connector (machine wire harness)

2. Plug the 3-socket connect of the neutral switch into the 3-pin connector labeled SWITCHED POWER INTERFACE (CAB PWR ENABLE) of the power harness (Figure 12).

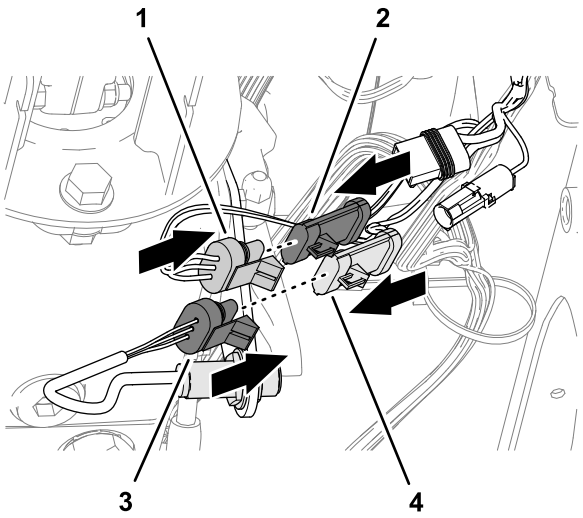

g252451

Figure 12

1. 3-socket connect (power harness)
2. 3-pin connector (machine wire harness)
3. 3-socket connect (neutral switch)
4. 3-pin connector (power harness)

3. Plug the 3-pin connector of the machine wire harness into the 3-socket connect of the power harness (Figure 12).

6

Connecting the Sunshade Harness to the Power Harness

No Parts Required

Procedure

Connect the 2-pin connector of the sunshade harness into the 2-socket connector of the power harness labeled CAB POWER (Figure 13).

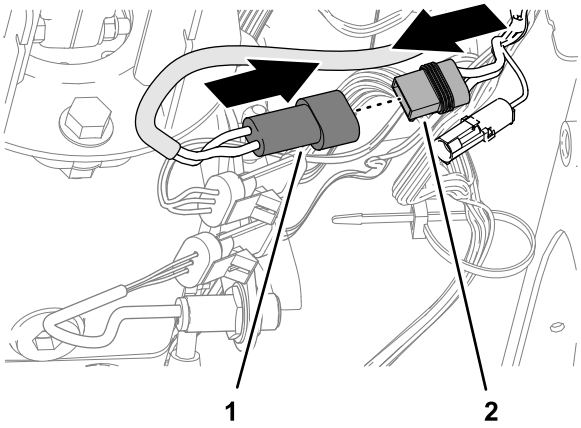

g252487

Figure 13

1. 2-pin connector (sunshade harness)
2. 2-socket connector (power harness—CAB POWER)

7

Connecting the Power Harness Ring Terminals

No Parts Required

Connecting the Positive Ring Terminal to the Starter

Models 03952, 03954, 03956, and 30879

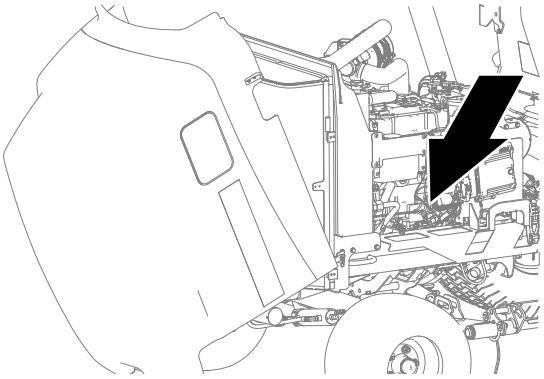

g252340

Figure 14

1. Remove the nut from Terminal S of the starter solenoid (Figure 15).

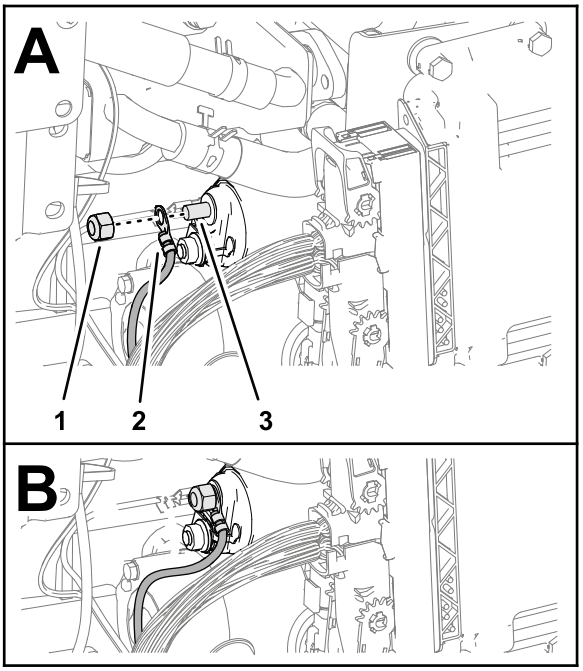

g252309

Figure 15

1. Nut
2. Ring terminal—power harness (BATTERY +)
3. Terminal S (starter solenoid)

2. Assemble the ring terminal of the power harness labeled BATTERY + onto the solenoid terminal (Figure 15).
3. Assemble the nut onto the solenoid terminal (Figure 15).
4. Torque the nut to 5.9 to 9.7 N·m (52 to 86 in-lb).

Connecting the Positive Ring Terminal to the Starter

Model 03950

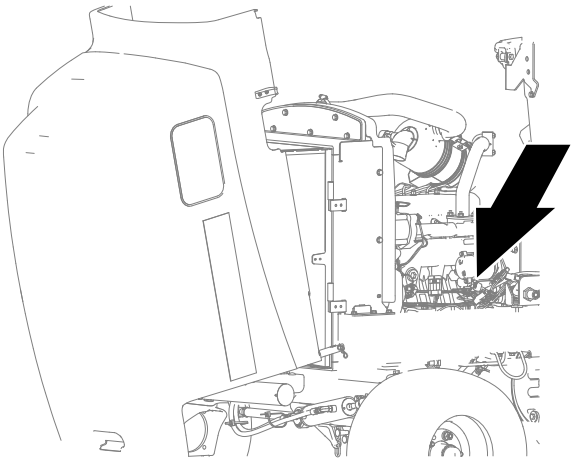

g252342

Figure 16

1. Remove the insulator from Terminal B of the starter solenoid (Figure 17).

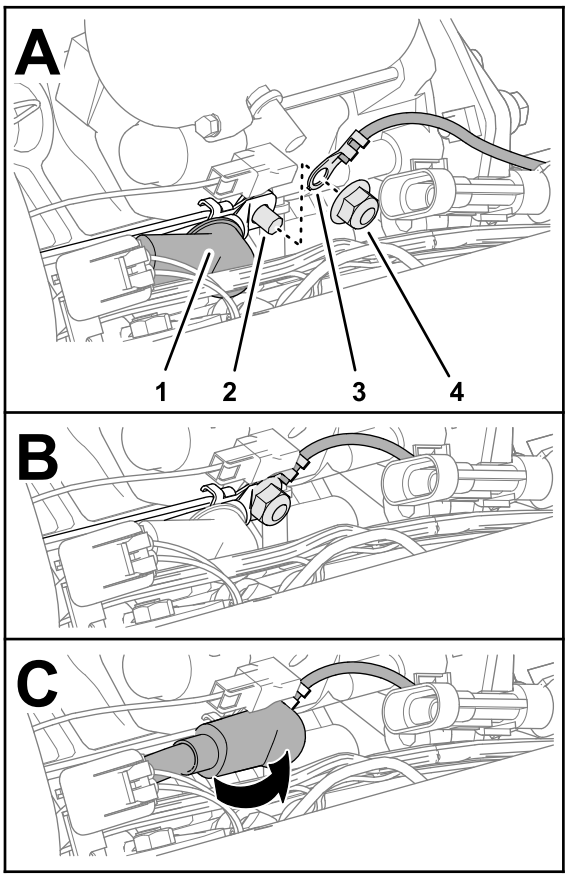

g252308

Figure 17

1. Insulator
2. Terminal B (starter solenoid)
3. Ring terminal—power harness (BATTERY +)
4. Nut

2. Remove the nut from Terminal B of the starter solenoid (Figure 17).
3. Assemble the ring terminal of the power harness labeled BATTERY + onto the solenoid terminal (Figure 17).
4. Assemble the nut onto the solenoid terminal (Figure 17).
5. Torque the nut to 5.9 to 9.7 N·m (52 to 86 in-lb).
6. Assemble the insulator over Terminal B of the starter solenoid as shown in Figure 17.

Connecting the Positive Ring Terminal to the Starter

Models 03964 and 03966

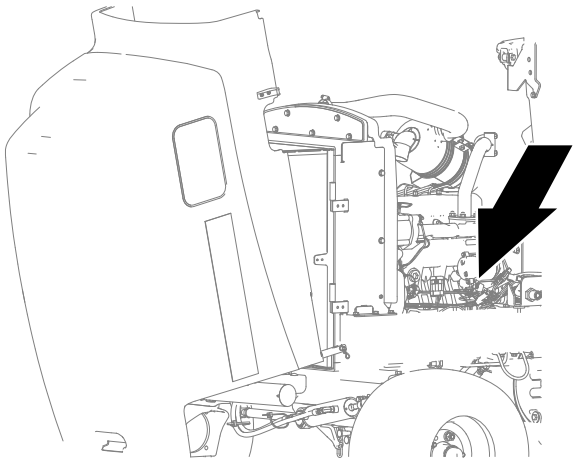

g252342

Figure 18

1. Remove the nut from Terminal B of the starter solenoid (Figure 19).

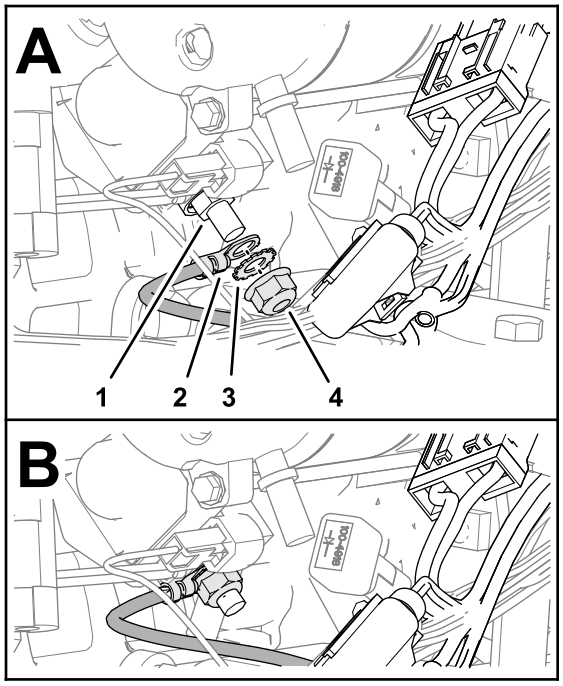

g252289

Figure 19

1. Terminal B (starter solenoid)
2. Ring terminal—power harness (BATTERY +)
3. Lock washer
4. Nut

2. Assemble the ring terminal of the power harness labeled BATTERY + onto the solenoid terminal (Figure 19).
3. Assemble the nut onto the solenoid terminal (Figure 19).

4. Torque the nut to 5.9 to 9.7 N·m (52 to 86 in-lb).

Connecting the Negative Ring Terminal to the Engine

Models 03952, 03954, 03956, and 30879

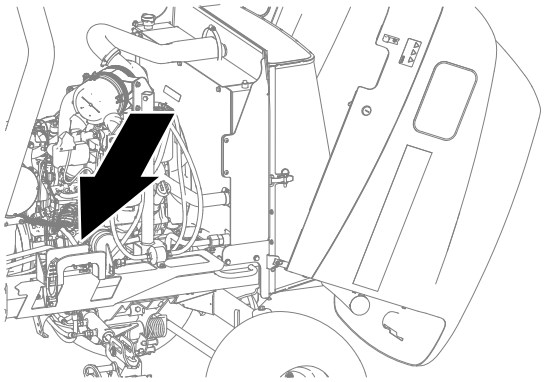

g252339

Figure 20

1. Remove the bolt that secures the negative battery cable to the engine case (Figure 21).

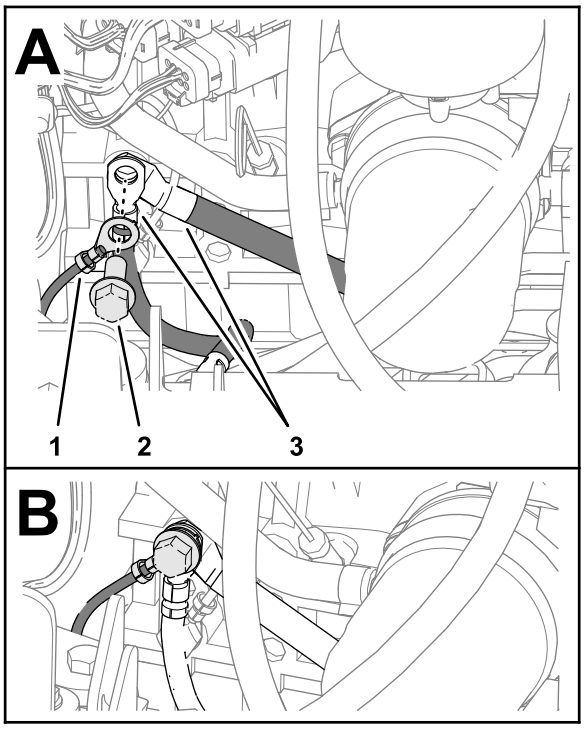

g252292

Figure 21

1. Ring terminal—power harness (BATTERY –)
2. Bolt (engine case)
3. Ring terminals (machine ground)

2. Assemble the ring terminal of the power harness labeled BATTERY – and negative battery cable to the engine case with the bolt (Figure 21).
3. Torque the nut to 46 to 57 N·m (34 to 42 ft-lb).

Connecting the Negative Ring Terminal to the Engine

Model 03950

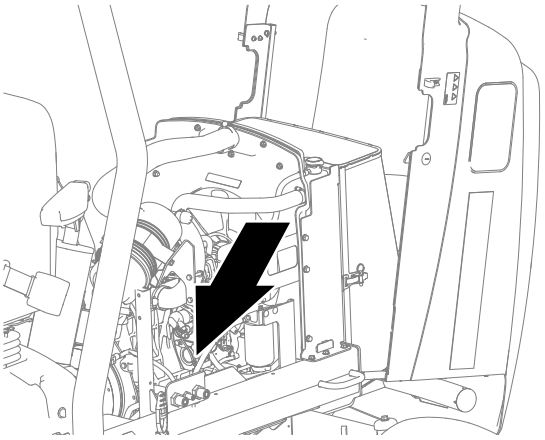

g252341

Figure 22

1. Remove the nut that secures the negative battery cable to the stud of the engine (Figure 23).

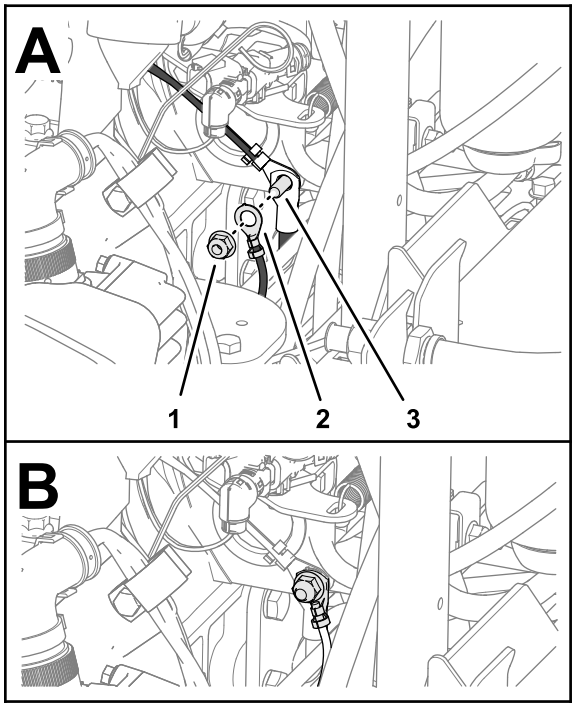

g252307

Figure 23

1. Nut
2. Ring terminal—power harness (BATTERY –)
3. Engine stud

2. Assemble the ring terminal of the power harness labeled BATTERY – onto the engine stud (Figure 23).
3. Assemble the nut onto the engine stud (Figure 23).

4. Torque the nut to 46 to 57 N·m (34 to 42 ft-lb).

Connecting the Negative Ring Terminal to the Engine

Model 03964 and 03966

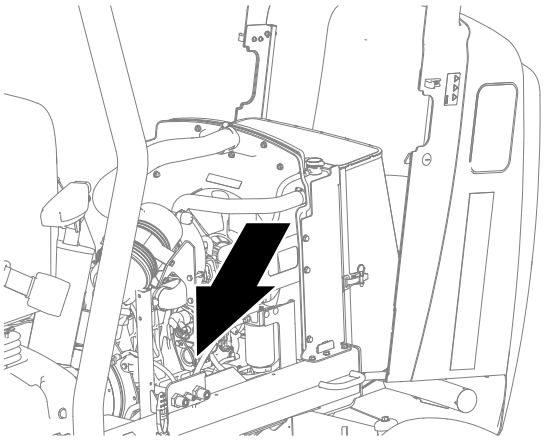

g252341

Figure 24

1. Remove the nut that secures the negative battery cable to the stud of the engine (Figure 25).

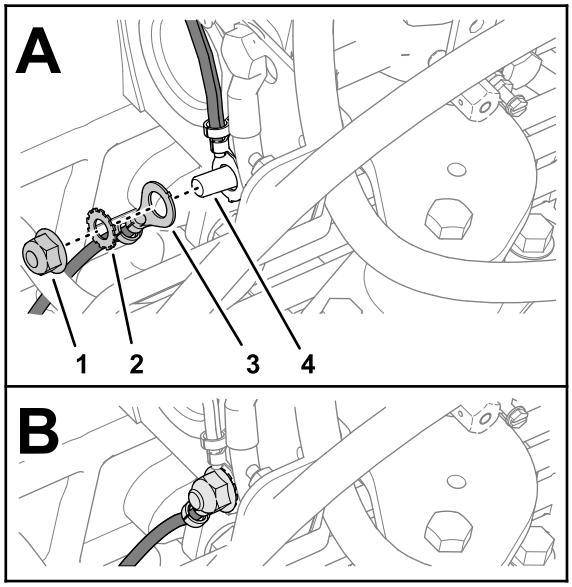

g252288

Figure 25

1. Nut
2. Lock washer
3. Ring terminal—power harness (BATTERY –)
4. Engine stud

2. Assemble the ring terminal of the power harness labeled BATTERY – onto the engine stud (Figure 25).
3. Assemble the nut onto the engine stud (Figure 25).
4. Torque the nut to 46 to 57 N·m (34 to 42 ft-lb).

8

Securing the Power Harness to the Machine

Parts needed for this procedure:

6	Cable tie

Procedure

Secure the power harness to the machine with the 6 cable ties as shown in Figure 26, Figure 28, Figure 29, and Figure 30.

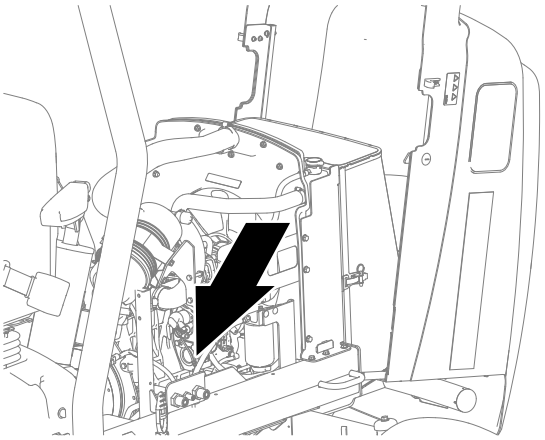

g252341

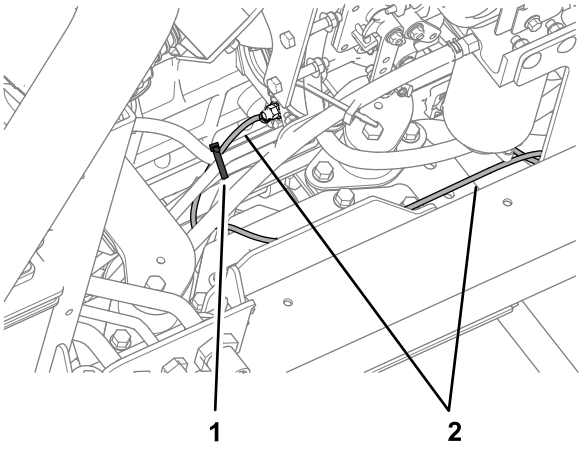

g252515

Figure 26

1. Cable tie
2. Power harness

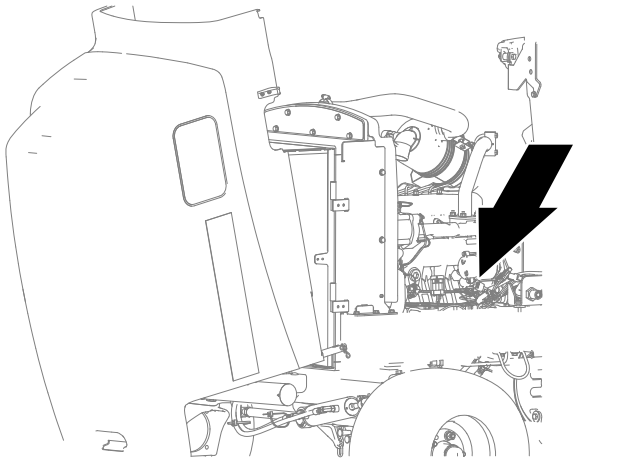

g252342

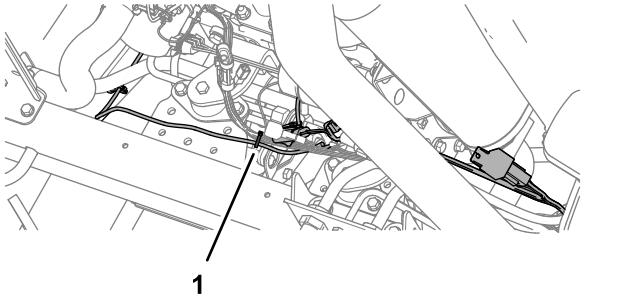

g252516

Figure 27

1. Cable tie

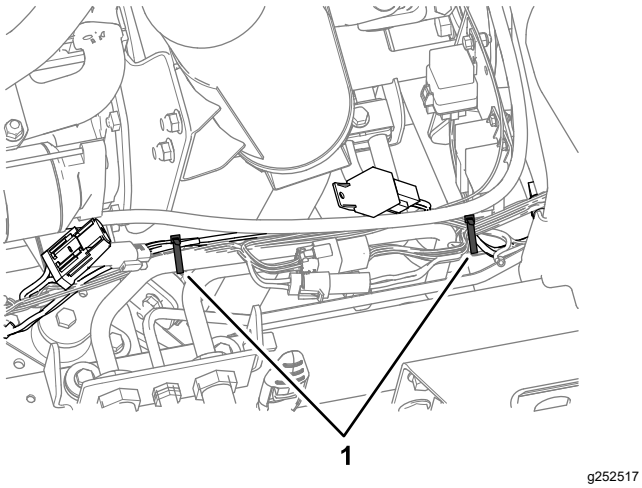

g252517

Figure 28

1. Cable tie

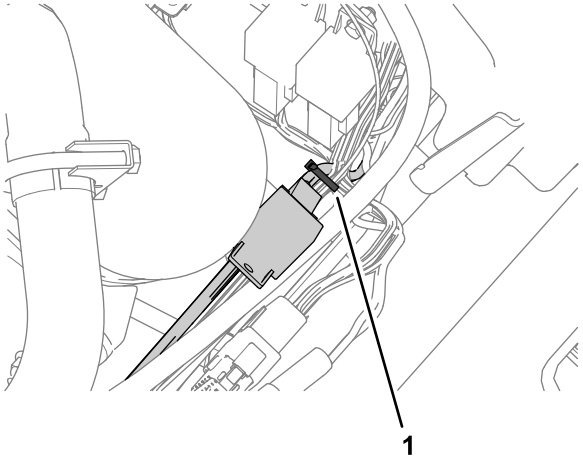

g252518

Figure 29

1. Cable tie

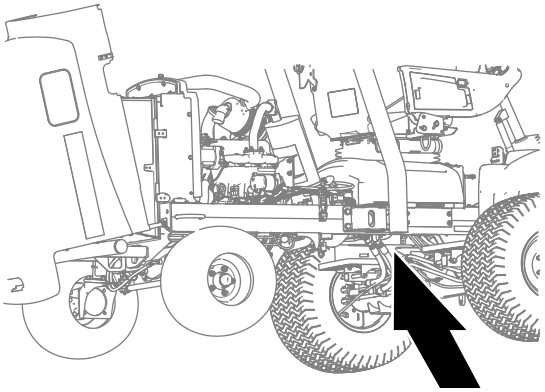

g252440

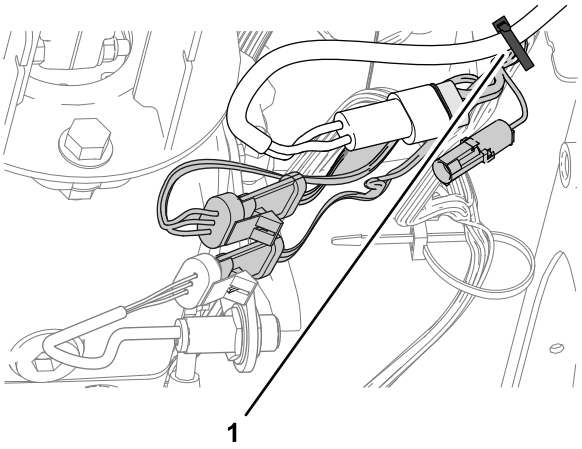

g252519

Figure 30

1. Cable tie

9

Connecting the Battery

No Parts Required

Procedure

1. For models 03950, 03952, 03954, 03956, and 30879, lower the hood and open the screen.
2. For models 03964 and 03966, open the hood.
3. Install the positive battery cable (red) to the positive (+) battery post.
4. Install the negative battery cable (black) to the negative (-) battery post.
5. Apply a coat of Grafo 112X (skin-over) grease, Toro Part No. 505-47 to the battery posts and battery-cable clamps.
6. Slide the rubber boot over the positive battery cable clamp.
7. Assemble the cover over the battery, inserting the tabs of the cover into the slots in the battery tray.
8. For models 03950, 03952, 03954, 03956, and 30879, close and latch the screen.
9. For models 03964 and 03966, close and latch the hood.

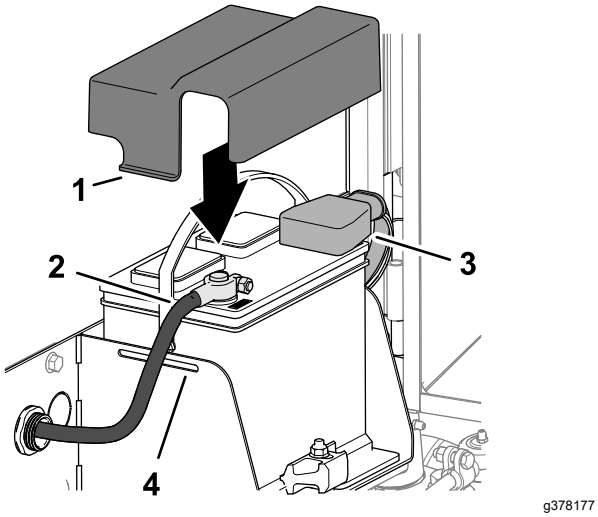

Figure 31

1. Cover
2. Negative battery cable
3. Positive battery cable
4. Battery tray



Count on it.