Form No. 3465-735 Rev C

ROPS Kit

TimeCutter® Max or Titan® Riding Mower

Model No. 79487—Serial No. 400000000 and Up

Installation Instructions

Store this document with the *Operator's Manual* for the traction unit.

Safety

Rollover Protection System (ROPS) Safety

- The ROPS is an integral safety device. Do not remove any of the ROPS components from the machine.
- Ensure that the seat belt is attached and that you can release it quickly in an emergency.
- Keep the roll bar in the fully raised and locked position and always wear your seat belt whenever the roll bar is up.
- Check carefully for overhead objects before you drive under them, and do not contact them.
- Replace damaged ROPS components. Do not repair or alter them.
- There is no rollover protection when the roll bar is down.
- Wheels dropping over edges, over steep banks, or into water can cause a rollover, which may result in serious injury or death.
- Do not wear the seat belt when the roll bar is down.
- Lower the roll bar only when absolutely necessary; raise it as soon as clearance permits.
- In the event of a rollover, take the machine to an Authorized Service Dealer to inspect the ROPS.
- Use only Toro approved accessories and attachments for the ROPS.

Safety and Instructional Decals

Safety decals and instructions are easily visible to the operator and are located near any area of potential danger. Replace any decal that is damaged or missing.

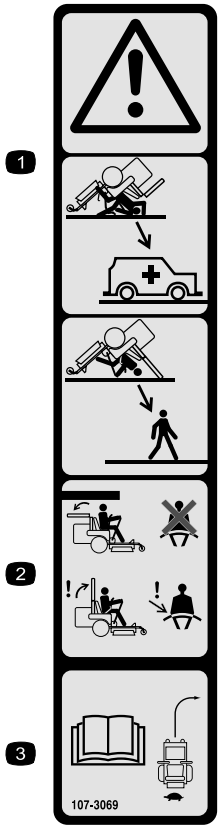

decal107-3069

107-3069

1. Warning—there is no rollover protection when the roll bar is down.
2. To avoid injury or death from a rollover accident, keep the roll bar in the fully raised and locked position and wear the seat belt. Lower the roll bar only when absolutely necessary; do not wear the seat belt when the roll bar is down.
3. Read the *Operator's Manual*; drive slowly and carefully.

© 2025—The Toro® Company
8111 Lyndale Avenue South
Bloomington, MN 55420

Register at www.Toro.com.

Original Instructions (EN)
Printed in the USA
All Rights Reserved

3465-735

Installation

Loose Parts

Use the chart below to verify that all parts have been shipped.

Procedure	Description	Qty.	Use
1	No parts required	–	Prepare the machine.
2	Left ROPS mount Right ROPS mount Hex-head bolt (1/2 x 2-1/2 inches) Locknut (1/2 inch) Left lower roll-bar tube Right lower roll-bar tube Hex-head bolt (1/2 x 3-1/2 inches)	1 1 4 8 1 1 4	Install the ROPS mounts and lower roll bar.
3	Left seat-belt bracket (MyRide models only) Right seat-belt bracket (MyRide models only) Partial-thread bolt (3/8 x 2 inches) Washer Locknut (3/8 inch) Seat belt-buckle assembly Seat belt-tongue assembly Carriage bolt (7/16 x 1 inch) Locknut (7/16 inch)	1 1 2 2 2 1 1 2 2	Install the seat belt (MyRide®-equipped models only).
4	Seat belt-buckle assembly Seat belt-tongue assembly Seat belt-buckle bracket (non-MyRide models only) Seat belt-tongue bracket (non-MyRide models only) Hex-head bolt (1/2 x 1 inch) Locknut (1/2 inch) Carriage bolt (3/8 x 1 inch) Locknut (3/8 inch)	1 1 1 1 2 6 4 4	Install the seat belt (non-MyRide models only).
5	Upper roll bar Bumper Shoulder bolt Wave washer Latch-pin assembly Locknut (1/2 inch) Oil (if needed)	1 2 2 2 2 2	Install the upper roll bar.
6	Suitcase weight (machines equipped with a bagger kit only)	1	Install additional weights (machines equipped with a bagger kit only).

1

Preparing the Machine

No Parts Required

Procedure

Note: Determine the left and right sides of the machine from the normal operating position.

1. Park the machine on a level surface.
2. Disengage the blade-control switch.
3. Move the motion-control levers outward to the PARK position.
4. Shut off the machine and remove the key.
5. Wait for all moving parts to stop.
6. Allow machine components to cool.
7. **Non-MyRide models only:** Raise the seat; refer to your machine *Operator's Manual*.
8. **MyRide models only:** Perform the following steps to remove the seat.
   A. Use the seat position lever to slide the seat forwards and backwards (Figure 1).

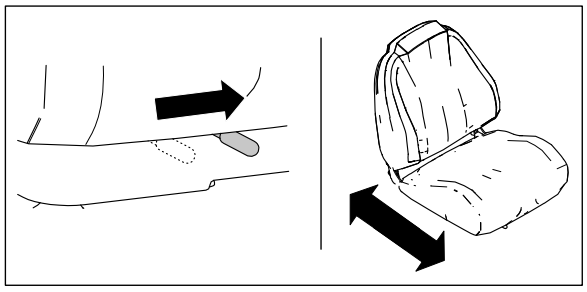

g471967

Figure 1

   B. Access the 4 Torx bolts that secure the seat pan to the frame. Remove the bolts, then carefully remove and set aside the seat assembly (Figure 2).

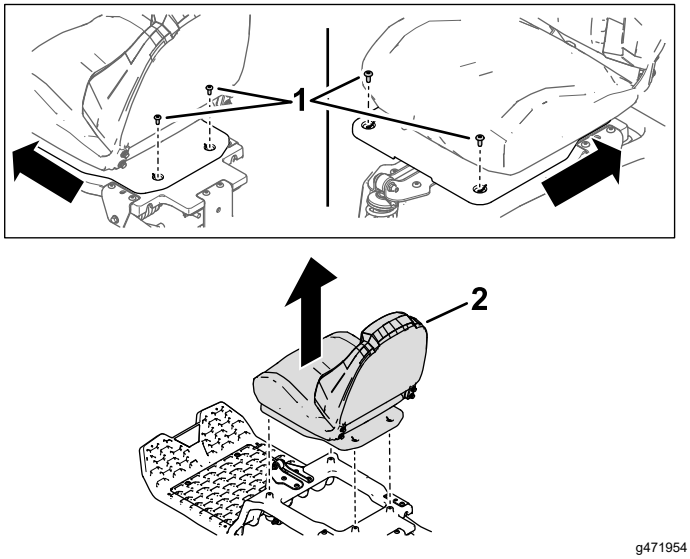

g471954

Figure 2

1. Torx bolt
2. Seat assembly

9. Raise the rear of the machine on jack stands; refer to your machine *Operator's Manual*.

⚠ WARNING

Supporting the machine on the lower muffler shield (Figure 3) may damage the shield and cause the machine to fall, injuring you or bystanders.

Do not use the lower muffler shield to support the machine.

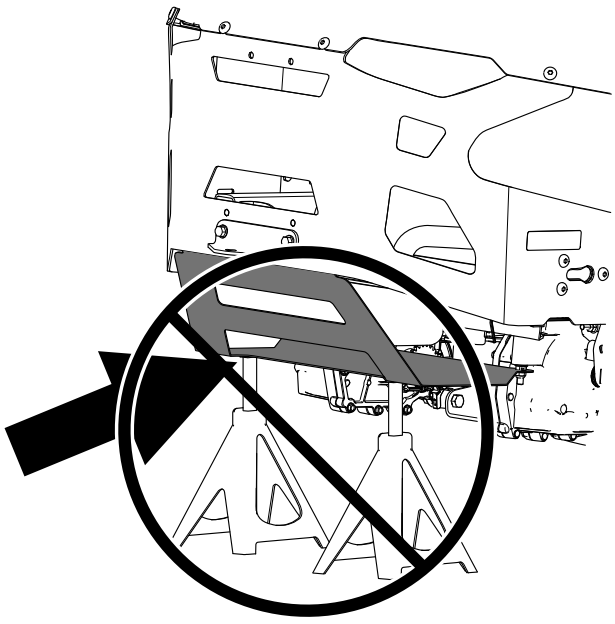

g471762

Figure 3

10. Remove the rear tires as shown in Figure 4

Note: Retain all wheel components for later installation.

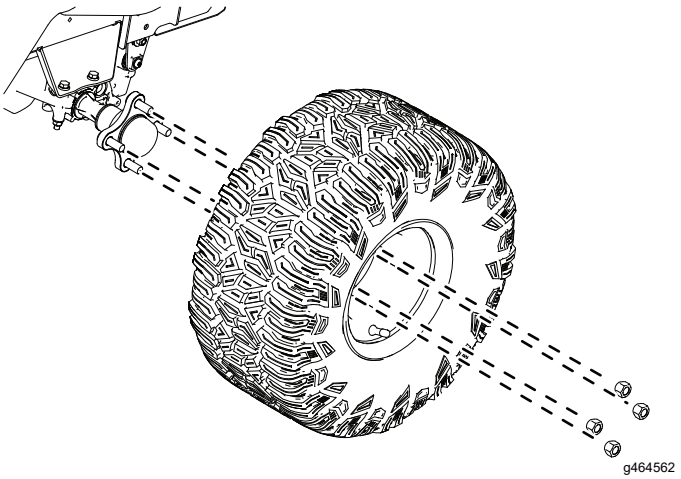

Figure 4

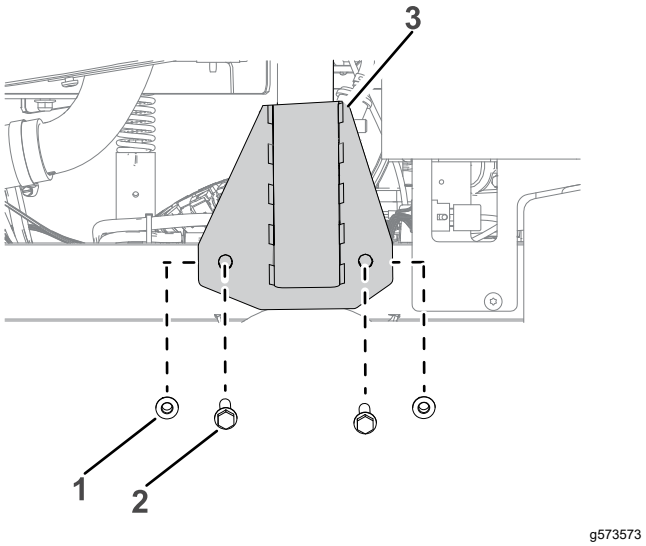

Figure 5
Left side shown

1. Locknut (1/2 inch)
2. Hex-head bolt (1/2 x 2-1/2 inches)
3. ROPS mount

2

Installing the ROPS Mounts and Lower Roll Bar

Parts needed for this procedure:

1	Left ROPS mount
1	Right ROPS mount
4	Hex-head bolt (1/2 x 2-1/2 inches)
8	Locknut (1/2 inch)
1	Left lower roll-bar tube
1	Right lower roll-bar tube
4	Hex-head bolt (1/2 x 3-1/2 inches)

Procedure

1. Install the ROPS mount to the machine frame above the axle as shown in Figure 5. Repeat on the other side.
2. Lower a lower roll-bar tube into the ROPS mount and secure with 2 hex-head bolts (1/2 x 3-1/2 inches) and 2 locknuts (1/2 inch) as shown in Figure 6. Repeat on the other side.

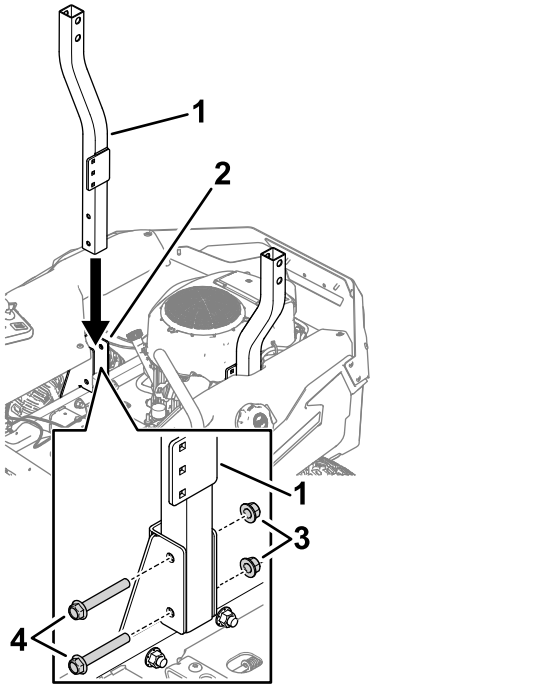

Figure 6

1. Lower roll-bar tube
2. ROPS mount
3. Locknut (1/2 inch)
4. Hex-head bolt (1/2 x 3-1/2 inches)

3. Torque the bolts in steps 1 and 2 to 91 to 113 N·m (67 to 83 ft-lb).

3

Installing the Seat Belt

MyRide-Equipped Models Only

Parts needed for this procedure:

1	Left seat-belt bracket (MyRide models only)
1	Right seat-belt bracket (MyRide models only)
2	Partial-thread bolt (3/8 x 2 inches)
2	Washer
2	Locknut (3/8 inch)
1	Seat belt-buckle assembly
1	Seat belt-tongue assembly
2	Carriage bolt (7/16 x 1 inch)
2	Locknut (7/16 inch)

Procedure

1. Install the seat-belt brackets to the seat platform with 2 partial-thread bolts (3/8 x 2 inches), 2 washers, and 2 locknuts (3/8 inch) as shown in Figure 7. Repeat on the other side.

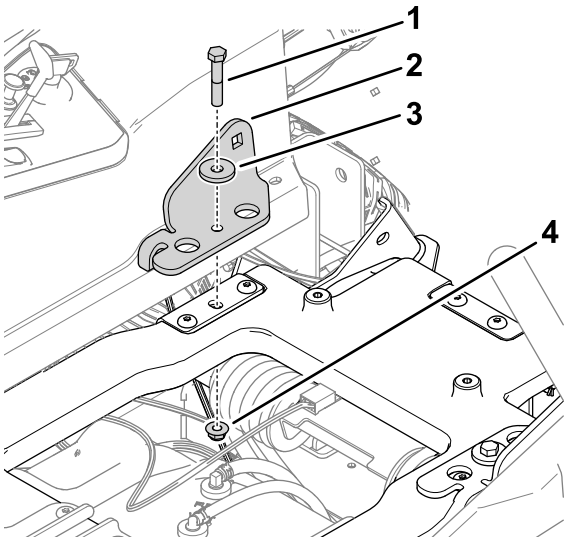

Figure 7

Seat platform shown

1. Partial-thread bolt (3/8 x 2 inches)
2. Seat-belt bracket
3. Washer
4. Locknut (3/8 inch)

2. Install the seat belt-buckle and tongue assemblies to the seat-belt brackets using 2 carriage bolts (7/16 x 1 inch) and 2 locknuts (7/16 inch) as shown in Figure 8. Repeat on the other side for the tongue assembly.

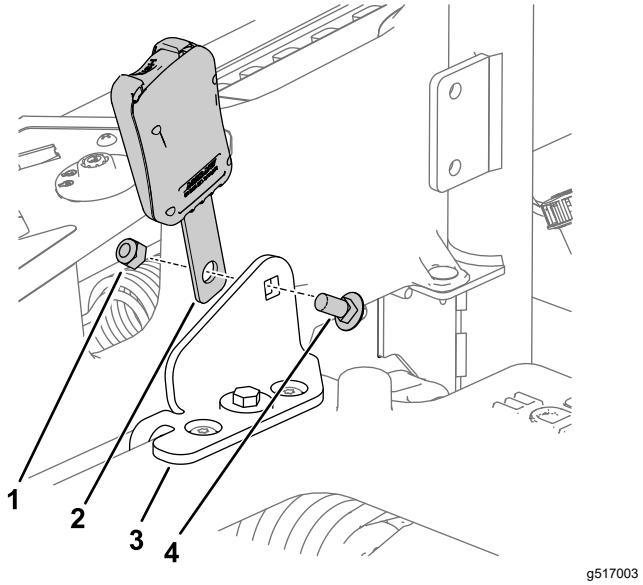

Figure 8

Buckle assembly shown. Repeat procedure with the tongue assembly.

1. Locknut (7/16 x 1 inch)
2. Seat belt-buckle assembly
3. Seat-belt bracket
4. Carriage bolt (7/16 x 1 inch)

4

Installing the Seat Belt

Non-MyRide Models Only

Parts needed for this procedure:

1	Seat belt-buckle assembly
1	Seat belt-tongue assembly
1	Seat belt-buckle bracket (non-MyRide models only)
1	Seat belt-tongue bracket (non-MyRide models only)
2	Hex-head bolt (1/2 x 1 inch)
6	Locknut (1/2 inch)
4	Carriage bolt (3/8 x 1 inch)
4	Locknut (3/8 inch)

Procedure

1. Assemble the seat belts by attaching the buckle and tongue to the inside of the seat-belt brackets using 2 hex-head bolts (1/2 x 1 inch) and 2 locknuts (1/2 inch) as shown in Figure 9.

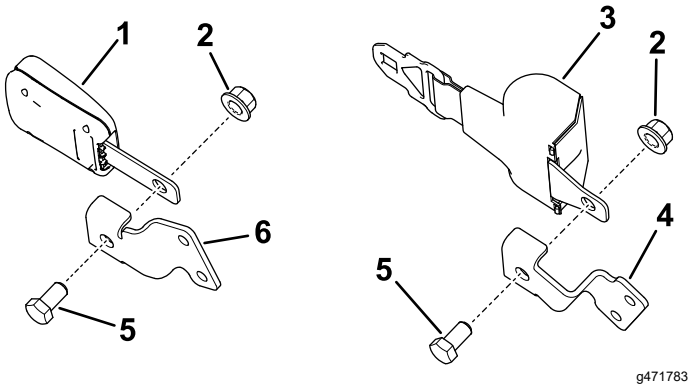

Figure 9

1. Buckle
2. Locknut (1/2 inch)
3. Tongue
4. Tongue bracket
5. Hex-head bolt (1/2 x 1 inch)
6. Buckle bracket

2. Install the buckle assembly from step 1 to the inside of the roll bar bracket using 2 carriage bolts (3/8 x 1 inch) and 2 locknuts (3/8 inch) as shown in Figure 10. Repeat on the other side for the tongue assembly.

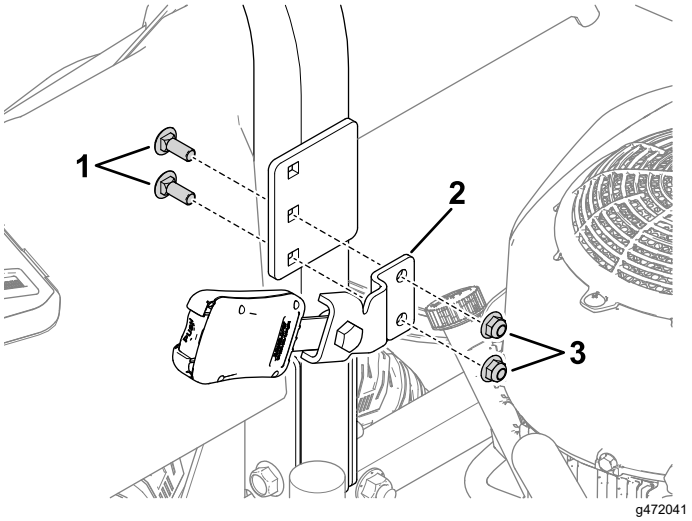

Figure 10
Buckle assembly shown

1. Carriage bolt (3/8 x 1 inch)
2. Buckle assembly
3. Locknut (3/8 inch)

5

Installing the Upper Roll Bar

Parts needed for this procedure:

1	Upper roll bar
2	Bumper
2	Shoulder bolt
2	Wave washer
2	Latch-pin assembly
2	Locknut (1/2 inch)
	Oil (if needed)

Procedure

1. Install the rear tires as shown in Figure 4.
2. Lower the machine; refer to your machine *Operator's Manual*.
3. Lower or install the seat; refer to 1 Preparing the Machine (page 3).
4. Locate the upper roll bar tube. Install 2 rubber bumpers (Figure 11).

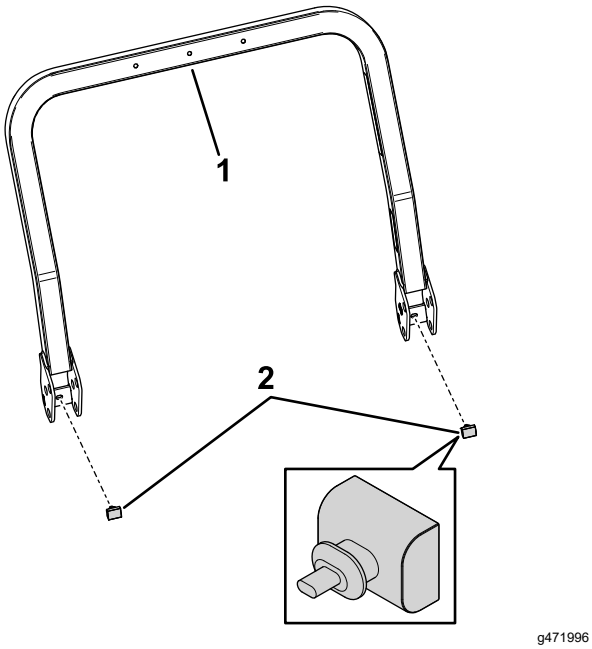

Figure 11

1. Upper roll bar
2. Rubber bumper

5. Lightly oil the inside surfaces of the lower roll bar tubes (Figure 12).
6. Loosely install the upper roll bar to the lower roll bar using 2 shoulder bolts, 2 wave washers, 2 washer tabs attached to lanyards, and 2 locknuts (1/2 inch) as shown in Figure 12.

   Note: Ensure that the shoulder bolts are installed with the bolt heads to the inside of the roll bar.

   Note: Ensure that the washer tabs are installed and pointed towards the rear of the machine.

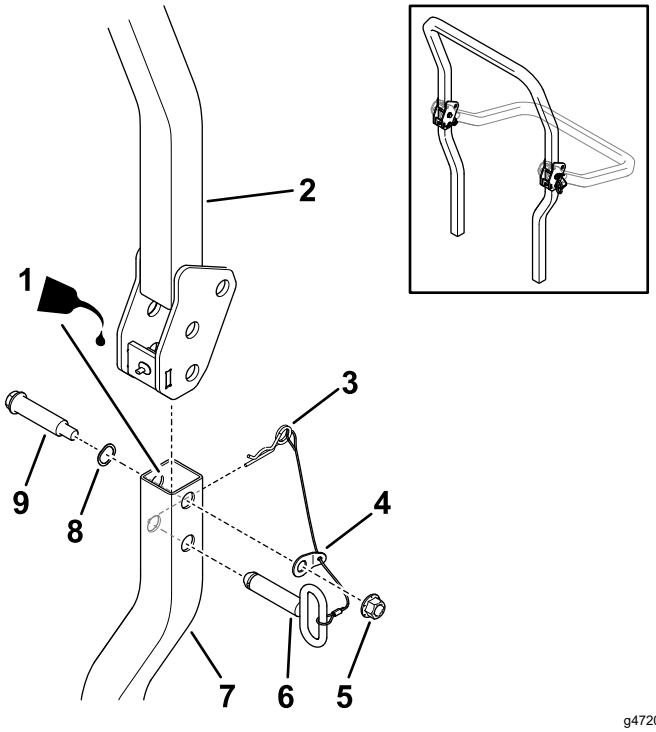

Figure 12

Left side of the machine shown. Repeat the process on the other side.

1. Apply oil to inside surfaces if needed.
2. Upper roll bar
3. Hairpin cotter
4. Washer tab
5. Locknut (1/2 inch)
6. Latch-pin assembly
7. Lower roll bar
8. Wave washer
9. Shoulder bolt

7. Torque the shoulder bolts to 91 to 113 N·m (67 to 83 ft-lb).
8. Raise the upper roll bar into the upright position, install the latch pins (the oval handles must be on the outside of the machine), and secure with hairpin cotters on each side (Figure 12).

6

Installing Additional Weights

Machines Equipped with a Bagger Kit Only

Parts needed for this procedure:

1	Suitcase weight (machines equipped with a bagger kit only)

Procedure

For machines equipped with a bagger kit only: Install the included additional suitcase weight to the machine using 2 bolts (3/8 x 2-3/4 inches) as shown in Figure 13.

Refer to the following table for the necessary number of weights required for each model and deck size:

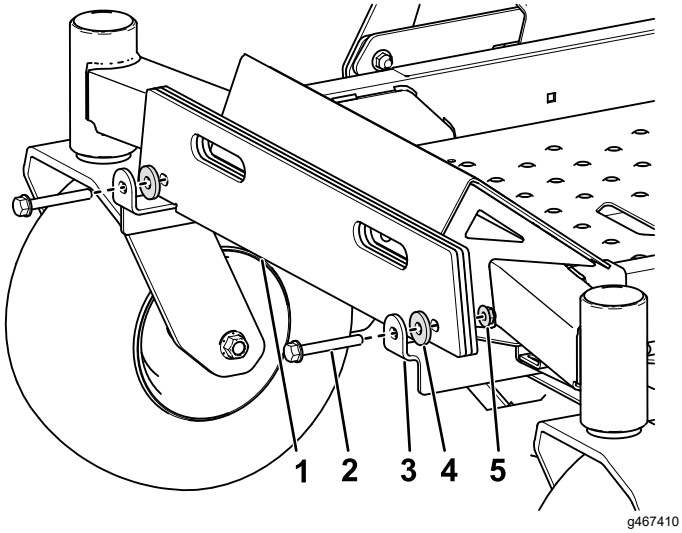

Figure 13

60 inch TimeCutter model with 3 weights shown.

1. Suitcase weight
2. Bolt (3/8 x 2-3/4 inches)
3. Weight-mounting bracket
4. Washer
5. Locknut (3/8 inch)

TimeCutter Max models	
Deck Size	**Total Weights Required**
60 inch	4
54 inch	5
50 inch	5
42 inch	7

Titan models	
Deck Size	**Total Weights Required**
60 inch	2
54 inch	3
48 inch	4

Important: **Whenever you remove the bagger attachment, remember to remove the front weights to return the proper stability to the machine.**

Maintenance

Checking the Seat Belt

Service Interval: Before each use or daily

Inspect the seat belt for wear, cuts, and proper operation of the retractor and buckle. Replace the seat belt if it is damaged.

Checking the Rollover Protection System (ROPS)

Service Interval: Before each use or daily

Visually inspect the ROPS for loose hardware or any other possible problem. Tighten the hardware or correct the problem before operating.