TORO

Operator's Manual

Maxi Sneaker 370

Model—Serial Range

25530T—324000102 and Up
25545T—324000112 and Up
25546T—324000106 and Up
25547T—326000000 and Up
25548T—326000000 and Up

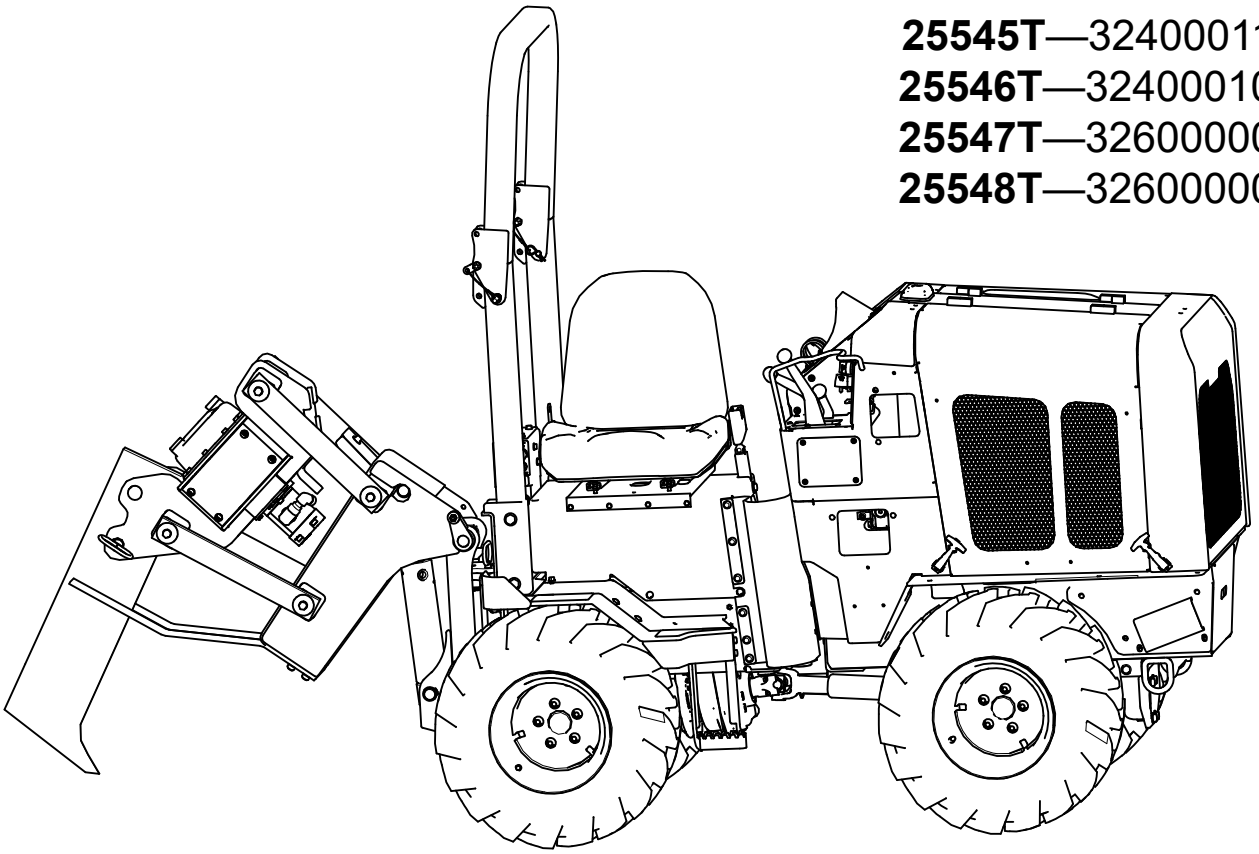

3479-157A

Original Instructions (EN)

3479-157

Disclaimers and Regulatory Information

It is a violation of California Public Resource Code Section 4442 or 4443 to use or operate the engine on any forest-covered, brush-covered, or grass-covered land unless the engine is equipped with a spark arrester, as defined in Section 4442, maintained in effective working order or the engine is constructed, equipped, and maintained for the prevention of fire.

Because in some areas there are local, state, or federal regulations requiring that a spark arrester be used on the engine of this machine, a spark arrester is available as an option. If you require a spark arrester, contact your Authorized Service Dealer. Genuine Toro spark arresters are approved by the USDA Forestry Service.

The enclosed engine owner's manual is supplied for information regarding the US Environmental Protection Agency (EPA) and the California Emission Control Regulation of emission systems, maintenance, and warranty. Replacements may be ordered through the engine manufacturer.

⚠ WARNING

CALIFORNIA
Proposition 65

The engine exhaust from this product contains chemicals known to the State of California to cause cancer, birth defects, or other reproductive harm.

Battery posts, terminals, and related accessories contain lead and lead compounds, chemicals known to the State of California to cause cancer and reproductive harm. Wash hands after handling.

Use of this product may cause exposure to chemicals known to the State of California to cause cancer, birth defects, or other reproductive harm.

FCC

This device complies with Part 15 of the FCC Rules. Operation is subject to the following conditions: (1) this device may not cause harmful interference, and (2) this device must accept any interference received, including interference that may cause undesired operation. Changes or modifications not expressly approved by Toro could void the user’s authority to operate the equipment.

© 2025—The Toro® Company
8111 Lyndale Ave So
Bloomington, MN 55044

Contact us at www.Toro.com
Printed in the USA
All rights reserved

Table of Contents

Disclaimers and Regulatory Information 2
Chapter 1: Introduction 1–1
- Intended Use 1–1
- Getting Help 1–1
- Manual Conventions 1–2
  - Safety Alert Classifications 1–2

Chapter 2: Safety 2–1
- General Safety 2–1
- Safety and Instructional Decals 2–2
  - Decal Locations 2–7
  - Plow Decal Locations 2–11
  - Trencher Safety Decal Locations 2–12
  - Hydra Borer Safety Decal Location 2–14

Chapter 3: Preparation 3–1
- Jobsite Preparation 3–1
  - Reviewing the Job Plan 3–1
  - Selecting the Start and End Points 3–1
  - Identifying Hazards 3–1
  - Locating Utilities 3–2
  - Classifying the Jobsite 3–2
- Classified Jobsite Precautions 3–3
  - Arranging for Traffic Control 3–3
- Operator Preparation 3–3
- Equipment Preparation 3–4
  - Installing Counterweights 3–4
  - Mounting the Fire Extinguisher 3–4

Chapter 4: Product Overview 4–1
- Controls 4–2
- Attachment Controls 4–7
  - Attachment Controls Descriptions 4–7
- Display 4–8
  - New Display 4–8
  - Legacy Display 4–10
- Specifications 4–12
  - Trencher Specifications 4–13
  - Hydra Borer Specifications 4–13
- Attachments/Accessories 4–13

Chapter 5: Operation 5–1
- Before Operation 5–1
  - Before Operation Safety 5–1
  - Fuel Safety 5–2
  - Fuel 5–2
  - Start Interlock System 5–4
  - Performing Daily Maintenance 5–4
- During Operation 5–4
  - During Operation Safety 5–4
  - Slope Safety 5–7
  - Adjusting the Roll Bar 5–8
  - Starting and Shutting Off the Engine 5–9
  - Plow 5–10
  - Trench 5–12

Trench Systems and Equipment 5–14
Drill 5–16
After Operation 5–19
After Operation Safety 5–19
Finishing the Job 5–19
Chapter 6: Transport 6–1
Hauling the Machine 6–1
Trailer Requirements 6–1
Loading the Machine 6–2
Tie-Down Points 6–3
Tying Down the Machine 6–3
Unloading the Machine 6–4
Retrieving the Machine 6–5
Chapter 7: Maintenance 7–1
Maintenance Safety 7–1
Recommended Maintenance Schedule 7–2
Lubrication 7–4
Greasing the Drive Shaft and U-Joint 7–4
Greasing the Plow 7–4
Engine Maintenance 7–5
Engine Safety 7–5
Engine Oil Specifications 7–5
Changing the Air Filter 7–5
Checking the Engine Oil 7–6
Changing the Engine Oil 7–6
Checking the Exhaust Clamp 7–7
Checking the Exhaust System 7–7
Fuel System Maintenance 7–7
Checking the Fuel Lines 7–7
Changing the Fuel Filter 7–7
Draining the Fuel/Water Separator 7–8
Electrical System Maintenance 7–8
Electrical System Safety 7–8
Checking the Battery 7–9
Charging the Battery 7–9
Drive System Maintenance 7–12
Tire Specifications 7–12
Changing the Axle Oil 7–12
Gearbox Specifications 7–13
Checking the Gearbox Oil 7–13
Changing the Gearbox Oil 7–14
Cooling System Maintenance 7–14
Cooling System Safety 7–14
Coolant Specifications 7–14
Checking the Engine Coolant Level 7–14
Changing the Engine Coolant 7–15
Checking the Radiator Hoses 7–15
Belt Maintenance 7–16
Checking the Drive Belt Tension 7–16
Adjusting the Drive Belt 7–16
Replacing the Drive Belt 7–17
Controls Maintenance 7–17
Adjusting the Parking Brake 7–17

Adjusting the Neutral Position 7–17
Cleaning the Controls Linkage Assembly 7–18
Hydraulic System Maintenance 7–19
Hydraulic System Safety 7–19
Hydraulic Fluid Specifications 7–19
Checking the Hydraulic Fluid Level 7–20
Changing the Hydraulic Fluid 7–20
Changing the Hydraulic Filter 7–21
Checking the Hydraulic Lines 7–22
Plow Maintenance 7–22
Plow Vibrator Oil Specifications 7–22
Checking the Plow Vibrator Oil 7–22
Changing the Plow Vibrator Oil 7–23
Checking the Plow Blade 7–23
Changing the Plow Blade 7–23
Changing the Plow Skid Shoes 7–23
Checking the Plow Mounting Bolts 7–24
Trencher Maintenance 7–24
Checking Chain Components 7–24
Adjusting the Digging Chain Tension 7–25
Removing the Chain 7–25
Checking the Trencher Mounting Bolts 7–26
Checking the Trench Cleaner Position 7–26
ROPS Maintenance 7–27
ROPS Notice 7–27
Checking the Roll Bar 7–27
Checking the Seat Belt 7–28
Cleaning 7–29
Removing Debris 7–29
Chapter 8: Storage 8–1
Storage Safety 8–1
Preparing the Machine for Storage Over 30 Days 8–1
Decommission the Machine 8–1
California Proposition 65 Warning Information

Intended Use

This machine is an articulating, hydrostatic, four-wheel drive, ride-on vibratory plow designed to install cable and pipe in a variety of soils. Optional trenching, drilling, and reel carrier attachments are available. Using this product for purposes other than its intended use could prove dangerous to you and bystanders. Do not modify the machine or attachments.

This machine should be operated, serviced, and repaired only by professionals familiar with its characteristics and acquainted with the relevant safety procedures.

Operate this machine in ambient temperatures from -12° to 46°C (10° to 115°F). Contact your Authorized Service Dealer for provisions required for operating this machine in extreme temperatures.

Read this information carefully to learn how to operate and maintain your product properly and to avoid injury and product damage. You are responsible for operating the product properly and safely.

Getting Help

Visit www.Toro.com for product safety and operation training materials, accessory information, help finding a dealer, or to register your product.

Whenever you need service, genuine Toro parts, or additional information, contact an Authorized Service Dealer or Toro Customer Service and have the model and serial numbers of your product ready. These numbers are located on the serial plate on your product (1). Write the numbers in the space provided.

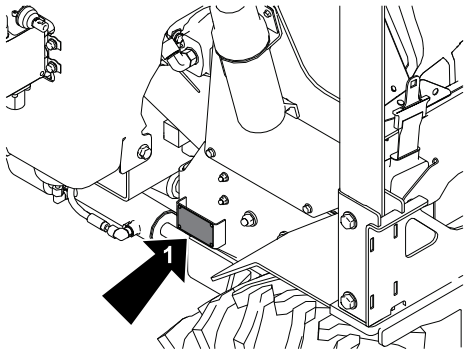

G402348

IMPORTANT

With your mobile device, you can scan the QR code on the serial number decal (if equipped) to access warranty, parts, and other product information.

Model Number:		**Serial Number:**	

Manual Conventions

This manual identifies potential hazards and has safety messages identified by the safety-alert symbol, which signals a hazard that may cause serious injury or death if you do not follow the recommended precautions.



G405934

This manual uses 2 words to highlight information. **Important** calls attention to special mechanical information and **Note** emphasizes general information worthy of special attention.

Safety Alert Classifications

The safety-alert symbol shown in this manual and on the machine identifies important safety messages that you must follow to prevent accidents.

Safety-alert symbol appears above information that alerts you to unsafe actions or situations and is followed by the word **DANGER**, **WARNING**, or **CAUTION**.

⚠ DANGER ⚠

Danger indicates an imminently hazardous situation which, if not avoided, *will* result in death or serious injury.

⚠ WARNING ⚠

Warning indicates a potentially hazardous situation which, if not avoided, *could* result in death or serious injury.

⚠ CAUTION ⚠

Caution indicates a potentially hazardous situation which, if not avoided, *may* result in minor or moderate injury.

General Safety

⚠ WARNING ⚠

Contacting underground utilities can cause death or serious injury.

Locate and verify underground utilities before digging or drilling.

- Before operating any equipment, review emergency procedures and check that all safety precautions have been taken.
- Read and understand the content of this *Operator's Manual* before starting the engine. Always follow all safety instructions to avoid serious injury or death.
- Keep bystanders out of the operating area. Mark the job site clearly. Stop the machine if a bystander enters the area.
- Do not operate the machine where flammable gas may be present.
- Slopes are a major factor related to loss-of-control and tip-over accidents, which can result in severe injury or death. Operating the machine on any slope or uneven terrain requires extra caution.

⚠ WARNING ⚠

Crushing can cause death or serious injury

Follow the procedure in *Operator's Manual*. Drive cautiously.

To help avoid injury:

- **Operate at slow speed when on rough terrain.**
- **Avoid driving across slopes.**
- **Never jerk control levers. Use a steady, even motion.**
- **Always operate with heavy end uphill.**
- **Always drive with attachment low to the ground.**

Safety and Instructional Decals

Safety decals and instructions are easily visible to the operator and are located near any area of potential danger. Replace any decal that is damaged or missing.

Decal Part: 147-5628



s_decal147-5628

1 Fuel—Diesel

Decal Part: 147-5630

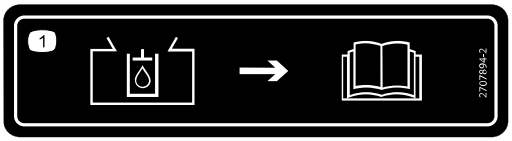

decal147-5630

1 Hydraulic fluid; Read the *Operator's Manual*.

Decal Part: 147-5631



decal147-5631

Decal Part: 147-5634

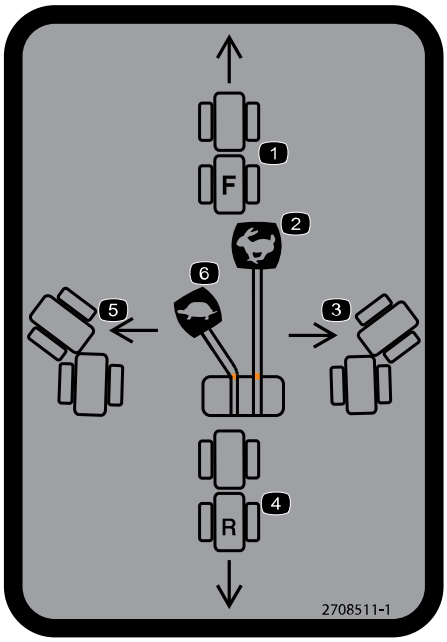

decal147-5634

1. Forward
2. Fast
3. Turn right
4. Rearward
5. Slow
6. Turn left

Decal Part: 147-5637

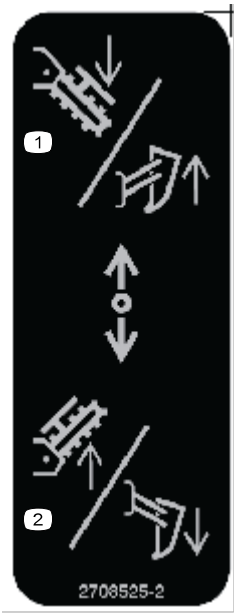

decal147-5637

1. Lower the trencher; raise the plow.
2. Raise the trencher; lower the plow.

Decal Part: 147-5638

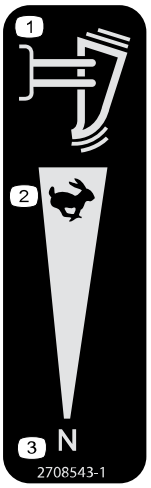

decal147-5638

1 Vibration

2 Fast

3 Neutral

Decal Part: 147-5642

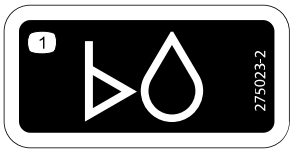

decal147-5642

1 Oil level

Decal Part: 147-5646

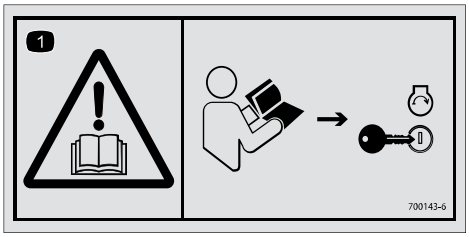

decal147-5646

1 Warning—Read the *Operator's Manual* before starting the machine.

Decal Part: 147-5652

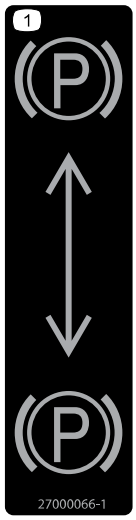

decal147-5652

1. Parking brake

Decal Part: 147-5639

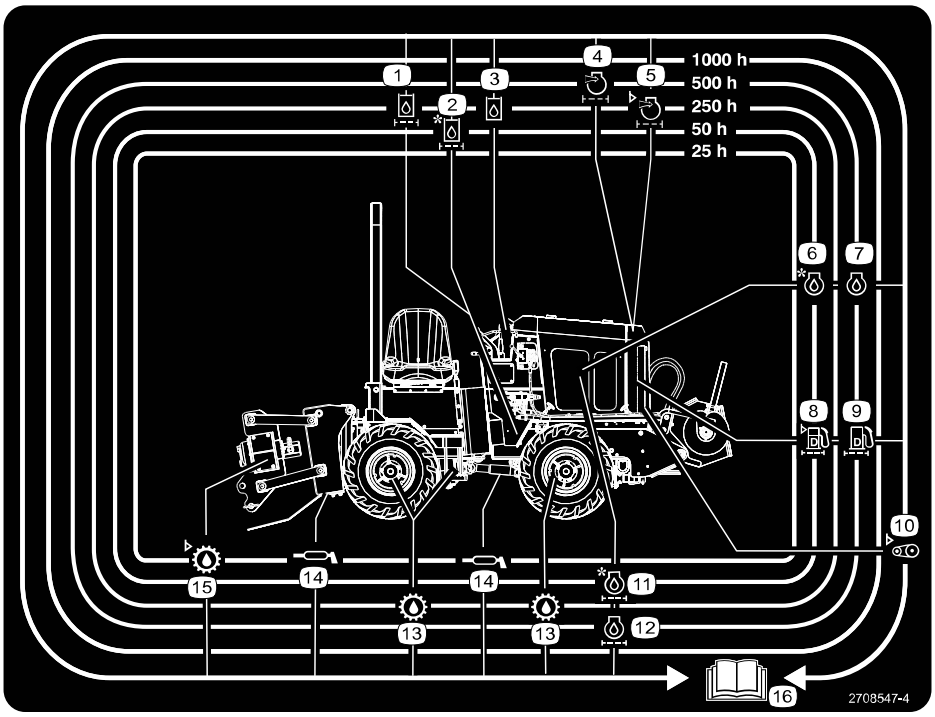

decal147-5639

1. Hydraulic fluid filter
2. Hydraulic fluid filter (initial change)
3. Hydraulic fluid
4. Engine air filter
5. Engine air filter (check)
6. Engine Oil (check)
7. Engine Oil
8. Fuel filter (check)
9. Fuel filter
10. Belt (check)
11. Engine oil filter (initial change)
12. Engine oil filter
13. Transmission oil
14. Lubrication point
15. Plow vibrator box oil
16. Read the *Operator's Manual*.

Decal Part: 147-5805

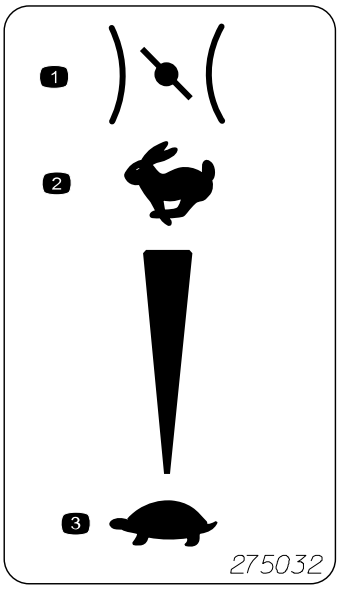

decal147-5805

1. Throttle
2. Fast
3. Slow

Decal Part: 161-0697



decal161-0697

1. Horn

Decal Part: 163-2410

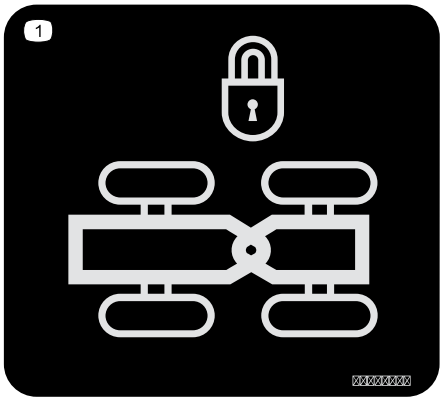

s_decal163-2410

1. Articulation lock

Decal Locations

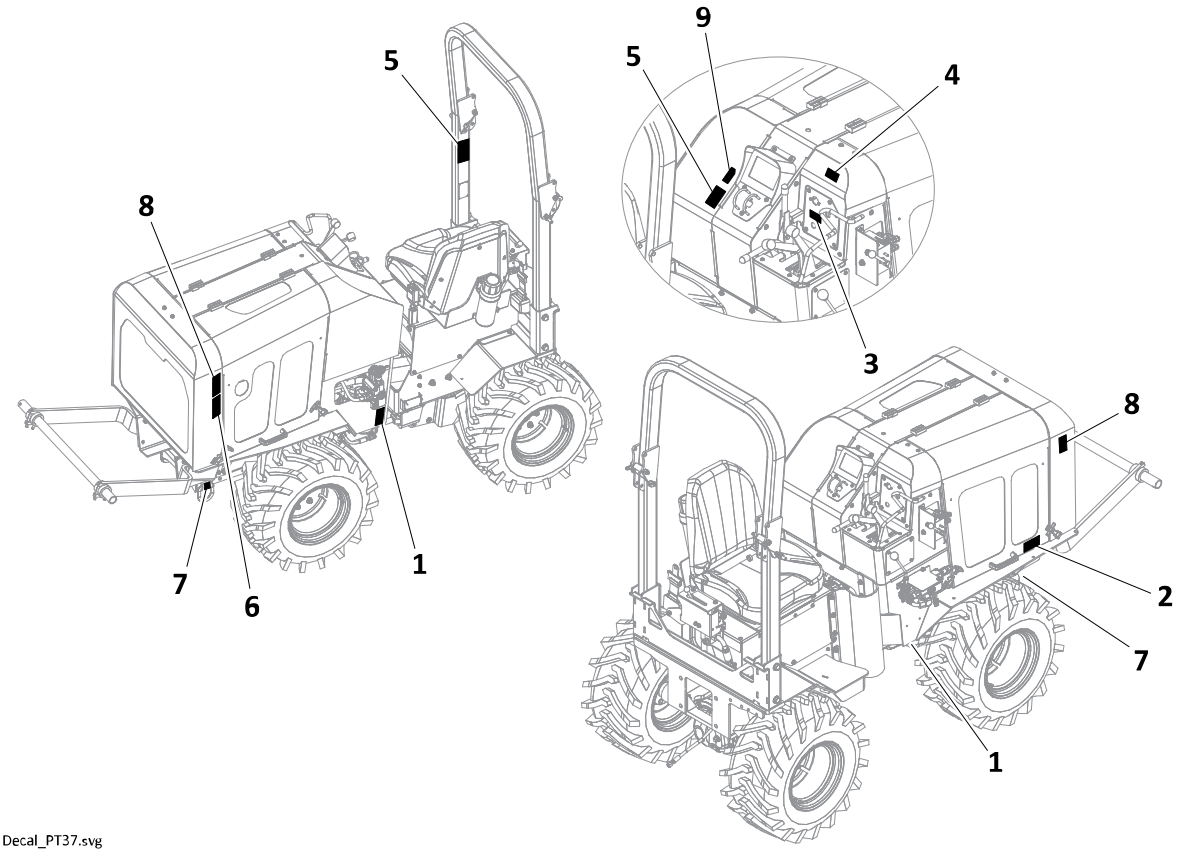

Decal_PT37.svg

G414366

1. 147-5647
2. 147-5627
3. 147-5645
4. 147-5629
5. 147-5650
6. 147-5651
7. 147-5641
8. 147-5648
9. 147-5644

Decal Part: 147-5647



decal147-5647

1. Crushing hazard—stay away form articulated joints.

Decal Locations (continued)

Decal Part: 147-5627

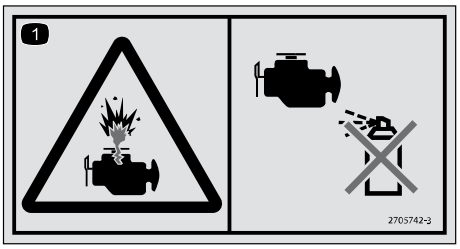

decal147-5627

(1) Explosion hazard—Do not use starting fluid.

Decal Part: 147-5645

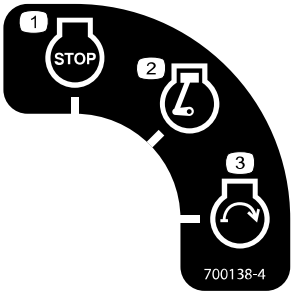

decal147-5645

(1) Engine—Off

(2) Engine—Run

(3) Engine—Start

Decal Part: 147-5629

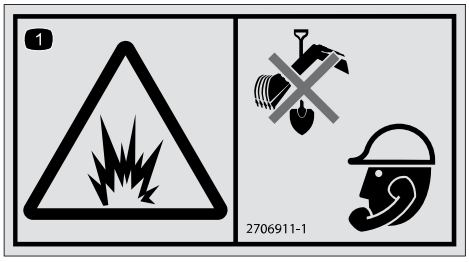

decal147-5629

(1) Explosion hazard—Call before you dig.

Decal Locations (continued)

Decal Part: 147-5650

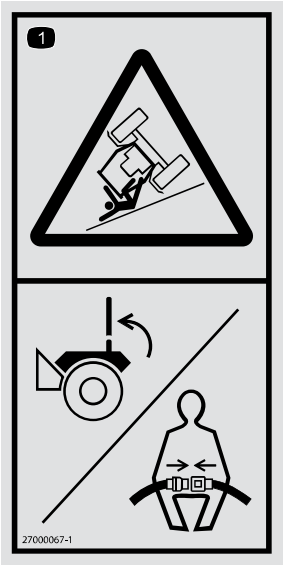

decal147-5650

1 Tipping hazard—Raise and lock the roll bar and wear a seatbelt.

Decal Part: 147-5651



decal147-5651

1 Burn hazard—keep away from hot surfaces.

Decal Locations (continued)

Decal Part: 147-5641

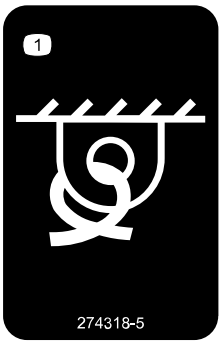

decal147-5641

(1) Tie down

Decal Part: 147-5648



decal147-5648

(1) Cutting hazard of the hand—Keep your hands away from the machine.

Decal Part: 147-5644

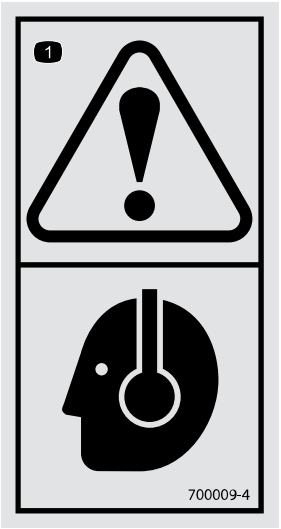

decal147-5644

(1) Warning—Wear hearing protection

Plow Decal Locations

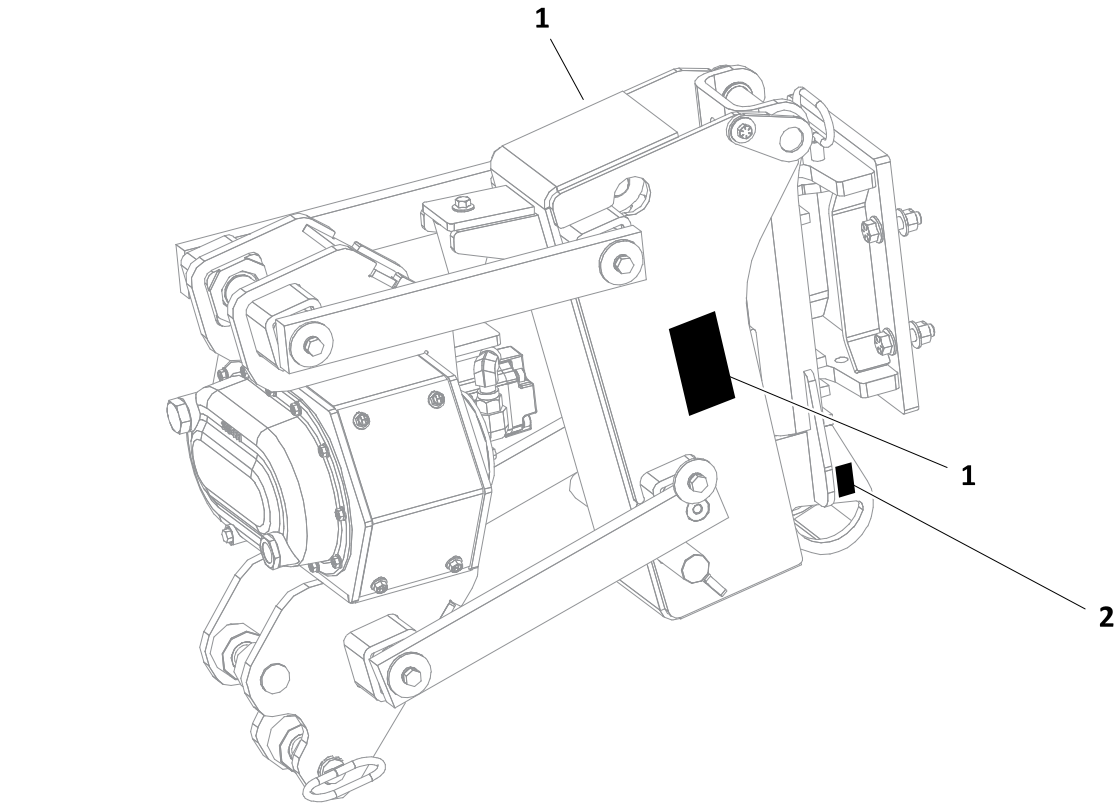

Decal_VP24.svg

G414368

(1) 147-5649

(2) 147-5641

Decal Part: 147-5649



decal147-5649

(1) Cutting hazard of the hand—Keep bystanders away.

Plow Decal Locations (continued)

Decal Part: 147-5641

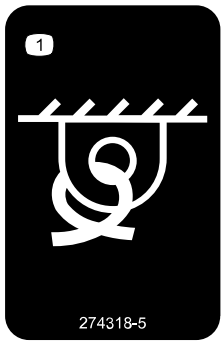

decal147-5641

(1) Tie down

Trencher Safety Decal Locations

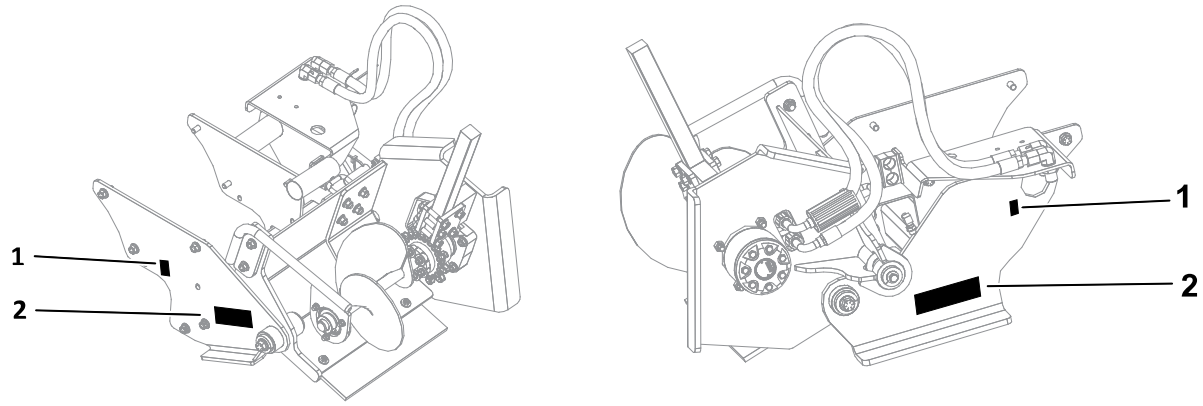

G434864

(1) Decal 147-5641

(2) Decal 147-5807

Decal Part: 147-5641

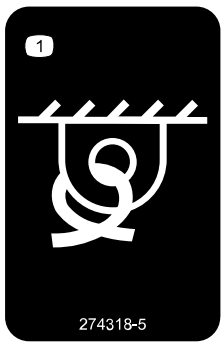

decal147-5641

(1) Tie down

Trencher Safety Decal Locations (continued)

Decal Part: 147-5654

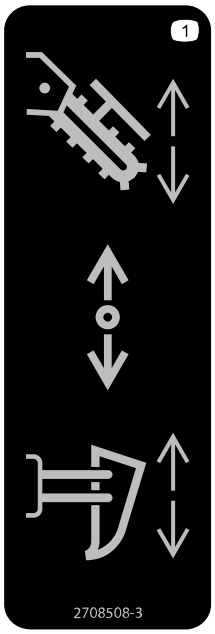

decal147-5654

(1) Attachment selector lever.

Decal Part: 147-5655

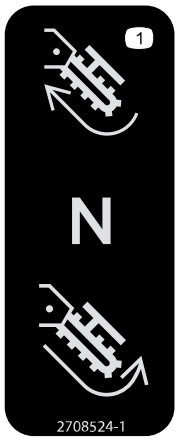

147-5655

(1) Trencher chain direction selector lever.

Decal Part: 147-5807

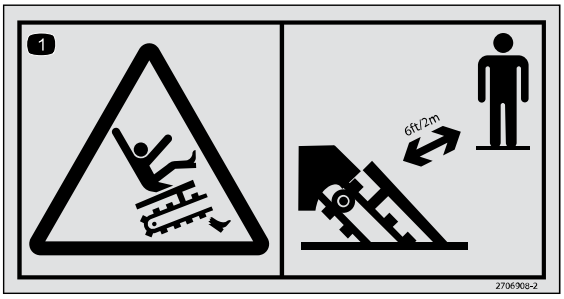

decal147-5807

(1) Cutting/dismemberment hazard, trencher—keep at least 2 m (6 ft) away.

Hydra Borer Safety Decal Location

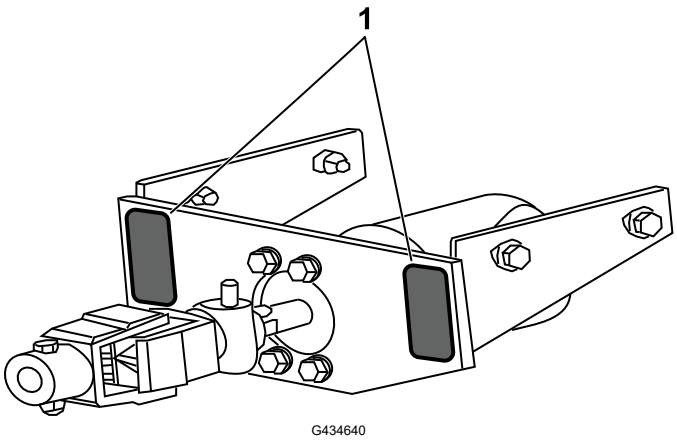

G434640

(1) Decal147-5746

Decal Part: 147-5746



decal147-5746

(1) Rotating shaft hazard; keep away from moving parts.

Decal Part: 147-5747



decal147-5747

Hydra Borer Safety Decal Location (continued)

Decal Part: 147-5748

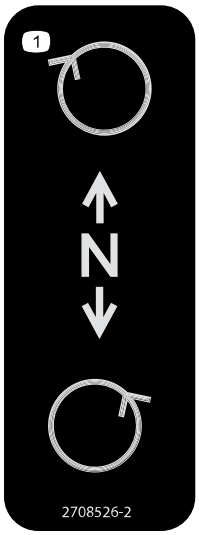

decal147-5748

(1) Push the lever forward to rotate the drill clockwise; Pull the lever rearward to rotate the drill counterclockwise.

Jobsite Preparation

A successful job begins before working. The first step in planning is reviewing information already available about the job and jobsite.

Reviewing the Job Plan

Review the blueprints or other plans. Check for information about existing or planned structures, elevations, or proposed work that may be taking place at the same time.

Selecting the Start and End Points

Select an end to use as a starting point. Consider the following when selecting a starting point:

- Always park the equipment on a level site. Consider how the slope will affect setup and operation. Assess the risks on each slope to determine if factors affecting risks create an unsafe condition for working.
- Check that the starting and ending points allow enough space for working.
- Consider how shade, wind, fumes, and other site features will affect operator comfort.

Identifying Hazards

Inspect the jobsite before transporting equipment; check for the following:

- Overall grade or slope
- Changes in elevation such as hills or open trenches
- Obstacles such as buildings, railroad crossings, or streams
- Signs of utilities
  - “Buried utility” notices
  - Gas or water meters
  - Drop boxes
  - Manhole covers
  - Utility facilities without overhead lines
  - Junction boxes

Identifying Hazards (continued)

  - Light poles
  - Sunken ground
- Traffic
- Access
- Soil type and condition
- Loose material such as fencing or cable

Locating Utilities

1. Notify One-Call Services; mark the proposed path with white paint and have the underground utilities located before working.
   - In the US or Canada, call 811 (US) or 888-258-0808 (US and Canada). Also contact any local utilities that do not participate in One-Call service.
   - In countries that do not have a One-Call service, contact all local utility companies to have underground utilities located.
2. Verify underground utilities; have an experienced locating equipment operator sweep the area within 6 m (20 ft) to each side of the proposed excavation to verify previously marked line and cable locations. Mark the location of all buried utilities and obstructions.
3. Locate overhead lines; note the location and height of all overhead lines in the jobsite and ensure that the equipment maintains a proper distance from live lines.

Classifying the Jobsite

Survey the jobsite and classify the hazards that may be present.

Jobsites are classified according to the underground hazards present, not by the line being installed. A jobsite may have more than one classification.

If you are working	Classification
within 3 m (10 ft) of a buried electric line	Electric
within 3 m (10 ft) of a natural gas line	Natural gas
in concrete, sand, or granite which is capable of producing crystalline silica dust	Crystalline silica dust
within 3 m (10 ft) of any other hazard	Other

Classify the jobsite as electric if the jobsite is in question or if the possibility of unmarked electric utilities exists.

Once classified, take precautions appropriate for the jobsite. Follow the US Department of Labor regulations on excavating and trenching (Part 1926, Subpart P) and other similar regulations.

Classified Jobsite Precautions

Electric Precautions

- Expose the line by careful hand digging or soft excavation.
- Have the service shut down while work is in progress.
- Have the electrical company test the lines before returning them to service.

Natural Gas Precautions

Position equipment upwind from the gas lines and use one or more of these methods:

- Expose the line by careful hand digging or soft excavation.
- Have the service shut down while work is in progress.
- Have the gas company test the lines before returning them to service.

Crystalline Dust Precautions

Crystalline silica dust is a naturally occurring substance found in soil, sand, concrete, granite, and quartz. To reduce exposure when cutting, drilling, or working these materials:

- Use a water spray or other means to control the dust.
- Refer to the US Occupational Safety and Health Administration (OSHA) guidelines or other applicable regulating guidelines for appropriate breathing protection or dust control methods.

Other Precautions

To safely avoid other underground hazards at each site, use different methods to determine the appropriate safety precautions.

Clear objects such as landscaping fabric, cable, and wire from the work area. These objects may be underground or partially buried.

Arranging for Traffic Control

Keep the vehicle and pedestrian traffic away from the equipment. Evaluate the jobsite and allow an appropriate buffer zone around the equipment. If the jobsite is near a road or other traffic area, contact the local authorities about safety procedures and regulations.

Operator Preparation

Follow these guidelines before operating any jobsite equipment:

- Complete proper training and read the *Operator's Manual* before using equipment.

- Plan for emergency services. Have the telephone numbers for local emergency and medical facilities on hand. Check that you will have access to a telephone.
- Review jobsite hazards, safety and emergency procedures, and individual responsibilities with all personnel before work begins. Safety Data Sheets (SDS) are available at www.Toro.com.
- Use equipment carefully. Stop operation and investigate anything that does not look or feel right.

Equipment Preparation

Preparation checklists are available at www.Toro.com.

Installing Counterweights

Install counterweights as needed for attachments.

Mounting the Fire Extinguisher

Mount a fire extinguisher near the engine but away from possible points of ignition where shown. The fire extinguisher should always be classified for both oil and electric fires. It should meet legal and regulatory requirements.

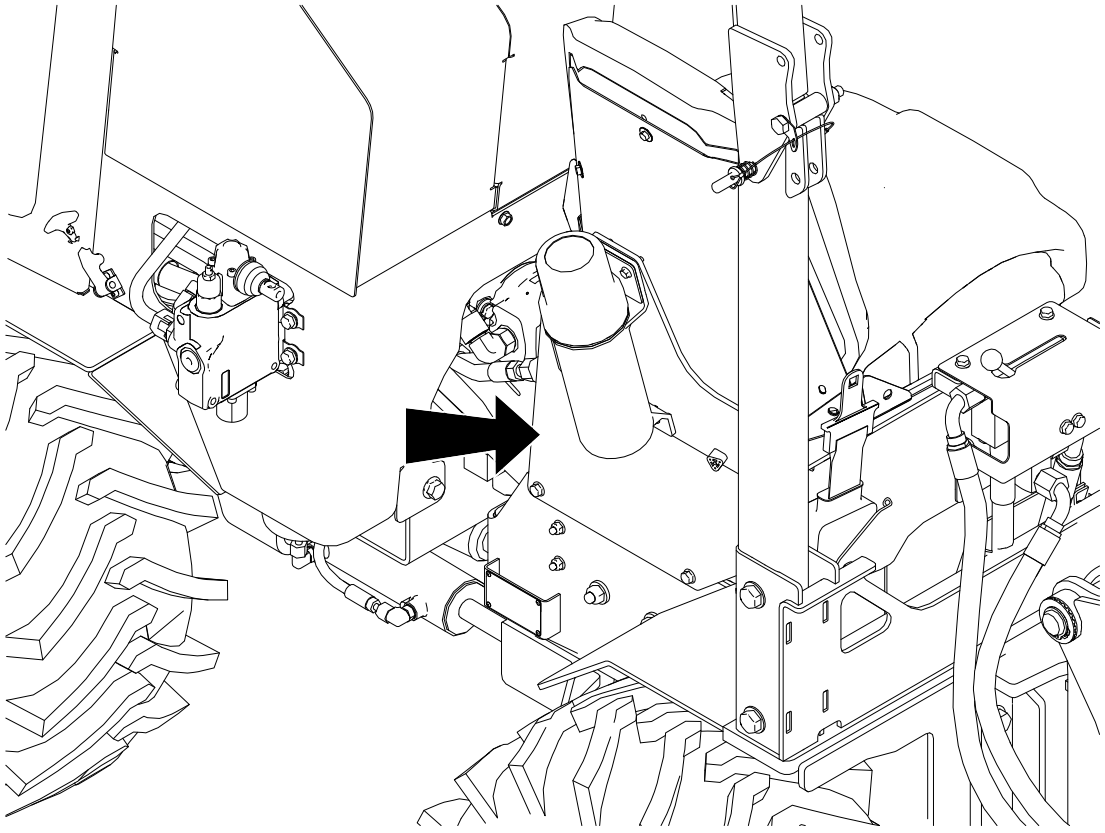

G409122

Chapter 4

Product Overview

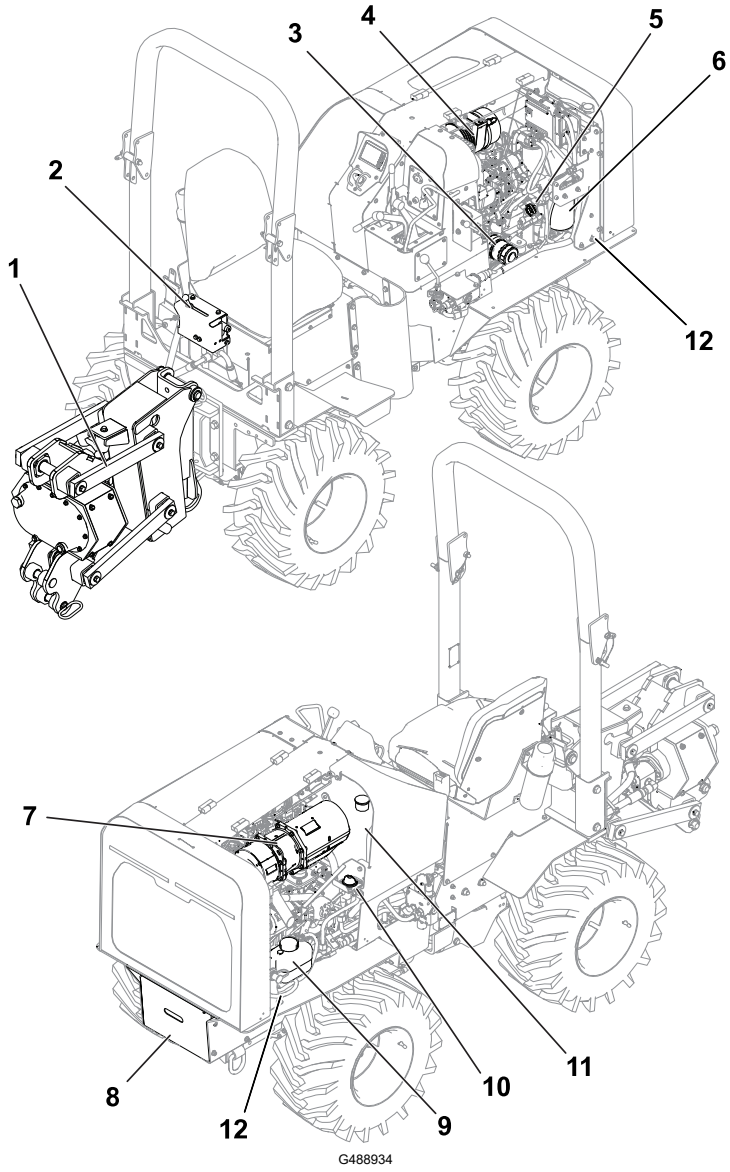

1. Plow
2. Plow control
3. Engine oil filter
4. Air filter
5. Engine oil cap
6. Fuel water separator
7. Diesel particulate filter
8. Battery
9. Coolant expansion tank
10. Battery disconnect switch
11. Hydraulic tank
12. Hood lock

Controls

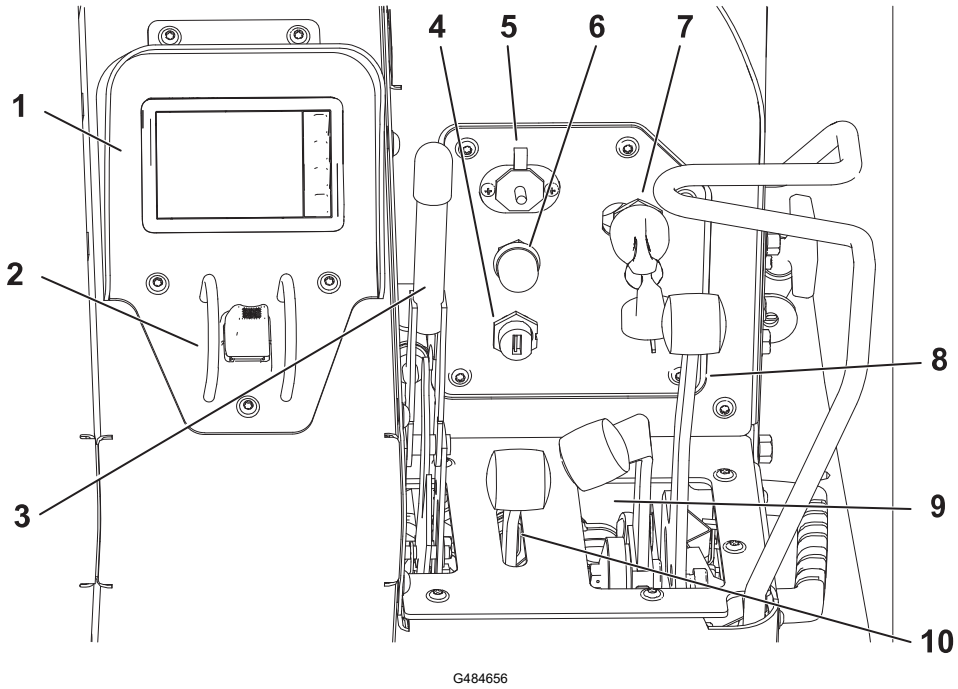

G484656

1. Display
2. Throttle
3. Parking brake
4. USB port
5. Auxiliary port
6. Horn
7. Key switch
8. Traction control lever
9. Low speed traction control
10. Attachment control lever

Articulation Lock

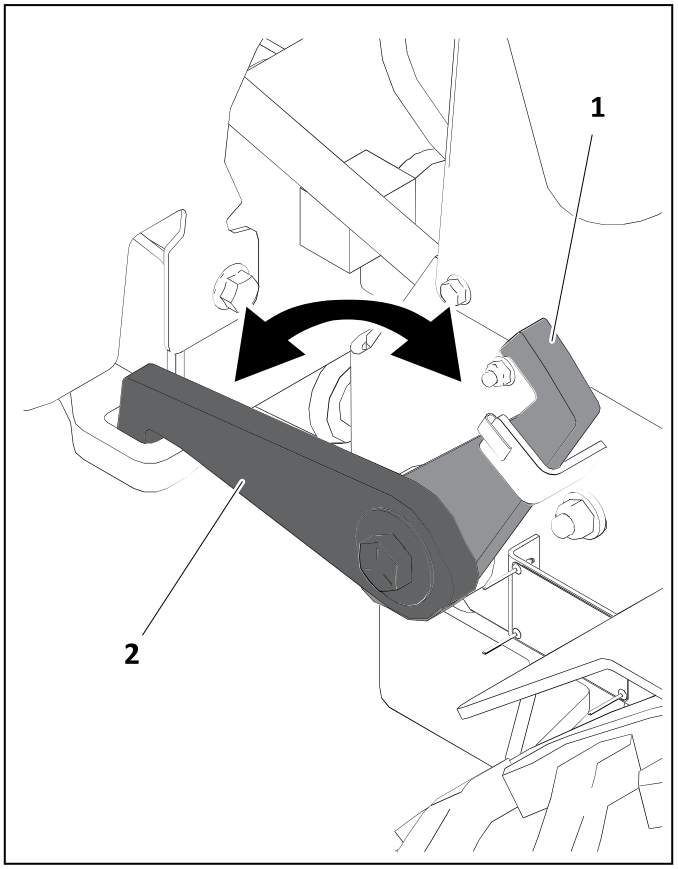

G488933

(1) Unlocked

(2) Locked

Throttle

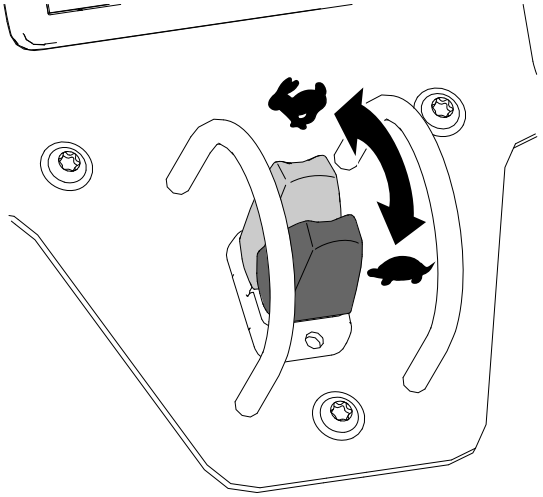

G407271

Battery Disconnect Switch

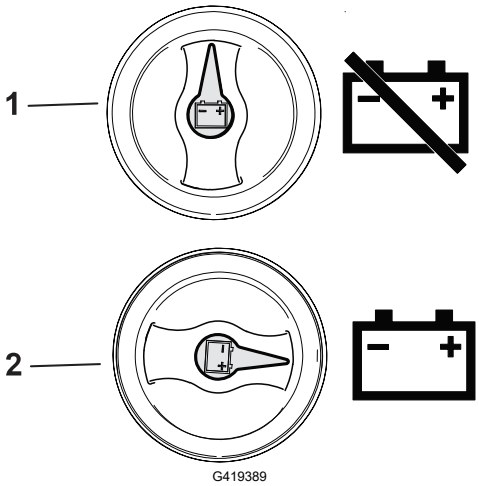

G419389

1 Off—to de-energize the machine electrically

2 On—to energize the machine electrically

Key Switch

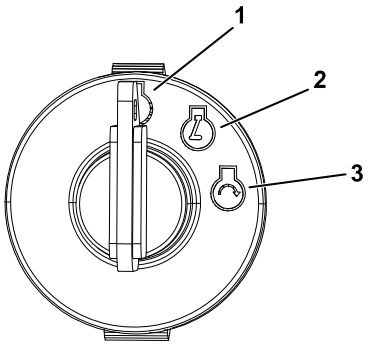

G407265

1 Stop engine

2 Run engine

3 Start engine

Parking Brake

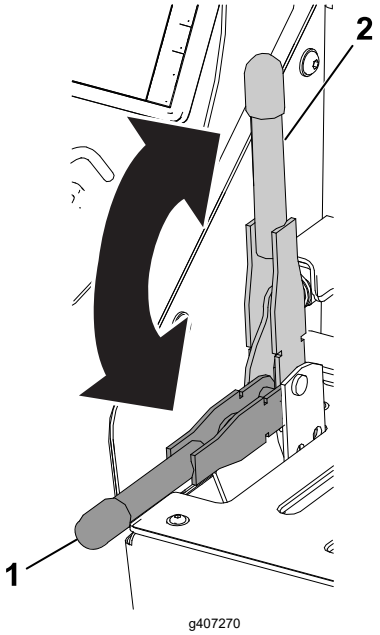

g407270

1 Disengage

2 Engage

Attachment Control Lever

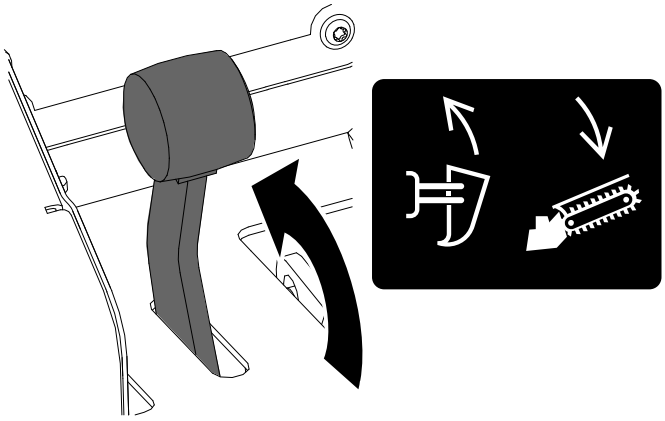

G407266

(1) Push the lever forward to RAISE the plow or LOWER the trencher/hydraulic reel carrier (if equipped).

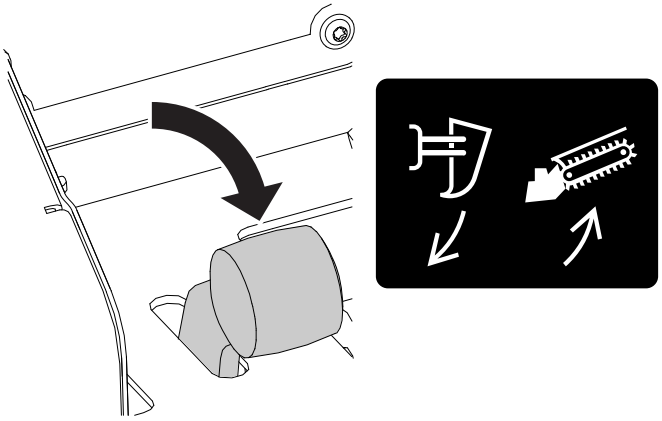

G407267

(1) Pull the lever rearward to LOWER the plow or RAISE the trencher/hydraulic reel carrier (if equipped).

Driving Controls

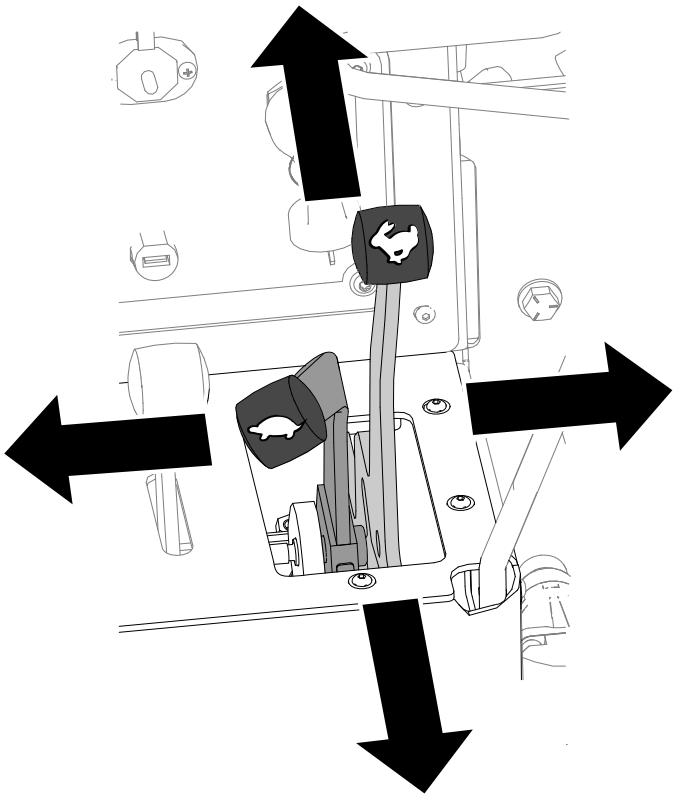

G407268

Attachment Controls

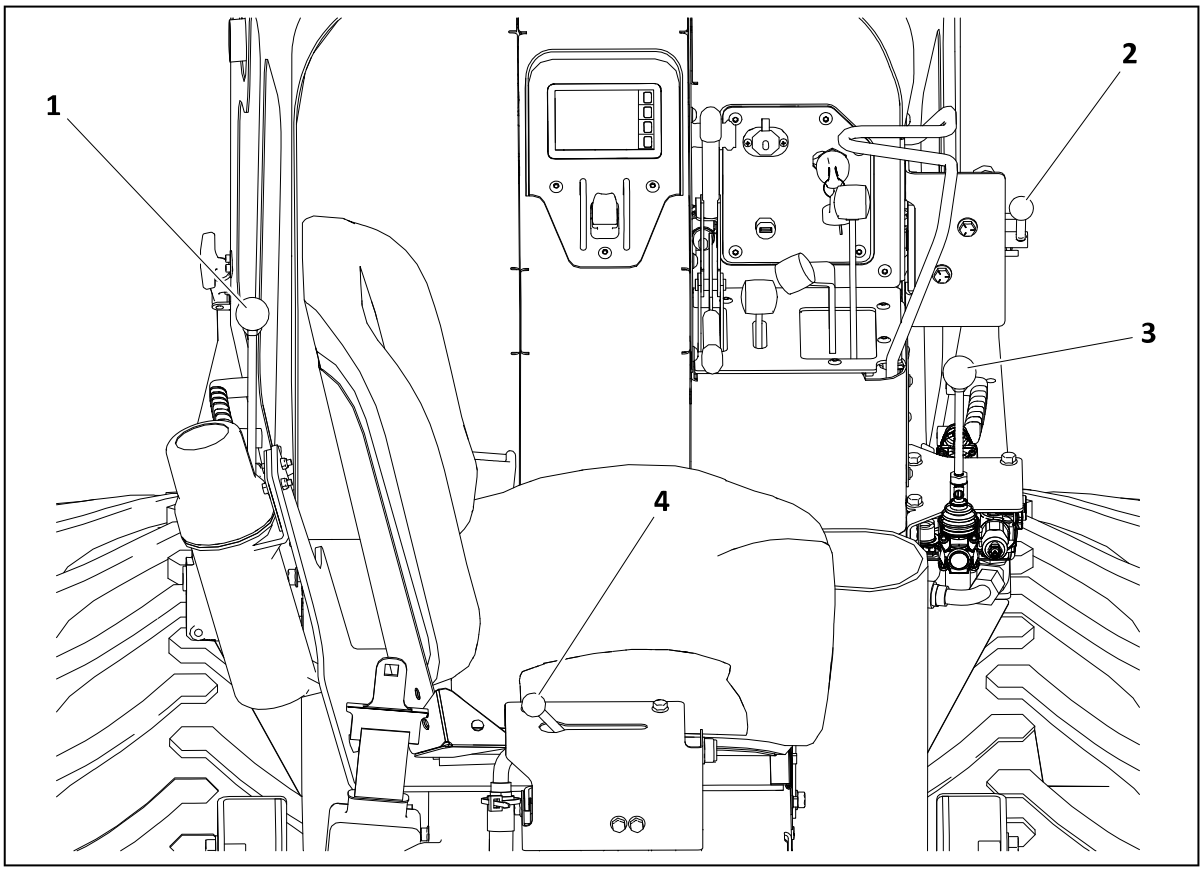

G429253

1. Drilling attachment control
2. Attachment selector control
3. Digging chain control
4. Plow vibrator control

Attachment Controls Descriptions

Icon	Icon Name	Description
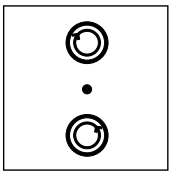	Drilling attachment control	To rotate the drill clockwise, push toward the front of the machine. To rotate the drill counterclockwise, pull toward the back of the machine.
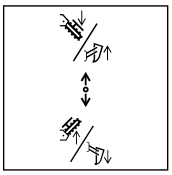 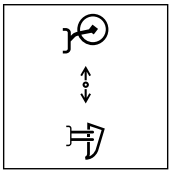	Attachment selector control	To select trencher or hydraulic reel carrier, move up. To select plow, move down.

Attachment Controls Descriptions (continued)

Icon	Icon Name	Description
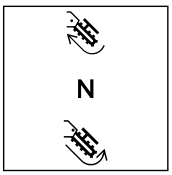	Digging chain control	To start chain, push toward the front of the machine. To reverse chain, pull toward the back of the machine.
	Plow vibrator control	To start the plow vibration, push toward right side of machine. To stop, pull back.

Display

New Display

Indicators

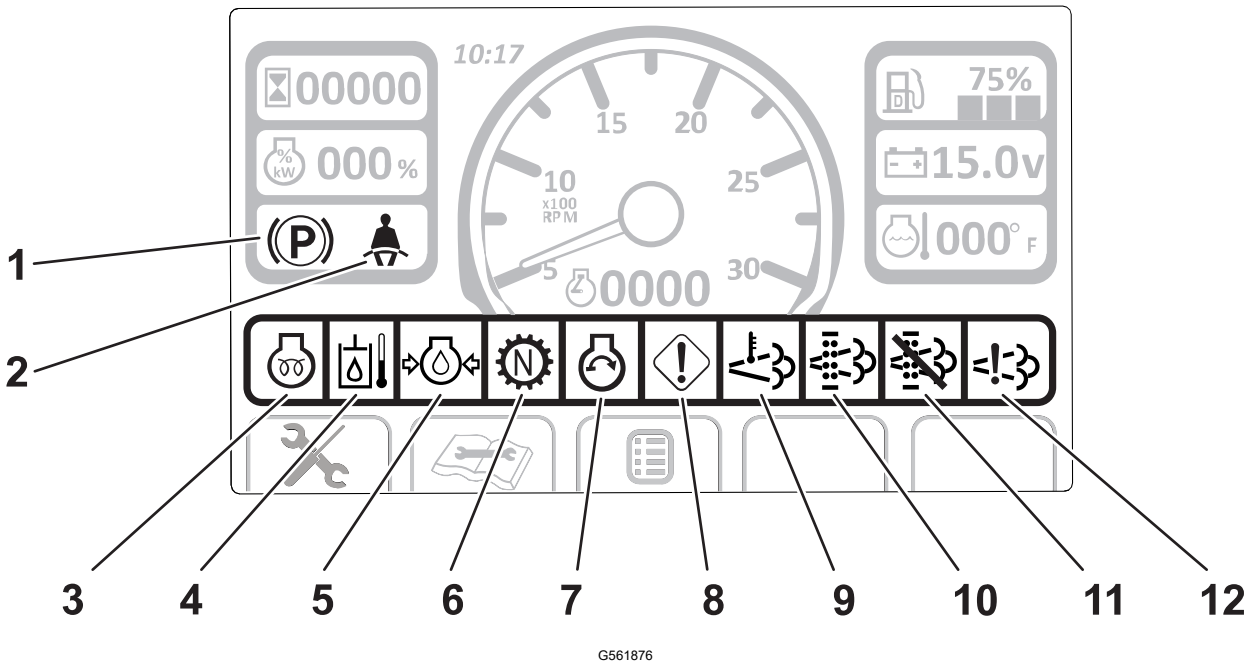

G561876

1. Parking brake indicator
2. Operator presence indicator
3. Cold start wait indicator
4. Hydraulic fluid temperature indicator
5. Engine oil pressure indicator
6. Neutral status indicator
7. Engine crank indicator
8. Engine caution/stop indicator
9. High exhaust temperature indicator
10. Exhaust cleaning indicator
11. Exhaust cleaning disabled indicator
12. NOX control diagnostic

New Display (continued)

Gauges

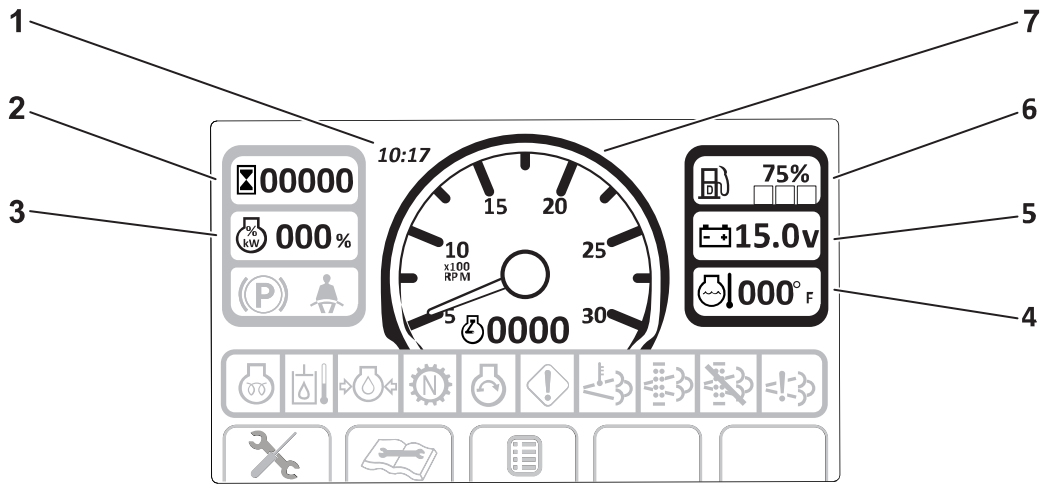

G561877

1. Clock
2. Hourmeter
3. Engine load percentage
4. Engine coolant temperature gauge
5. Voltmeter
6. Fuel gauge
7. Tachometer

Keys

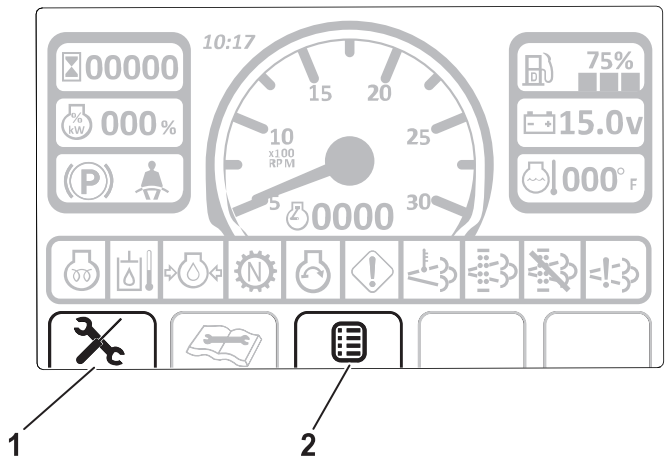

G561878

1. Hide/Recall diagnostics key
2. Main menu key

Legacy Display

Indicators

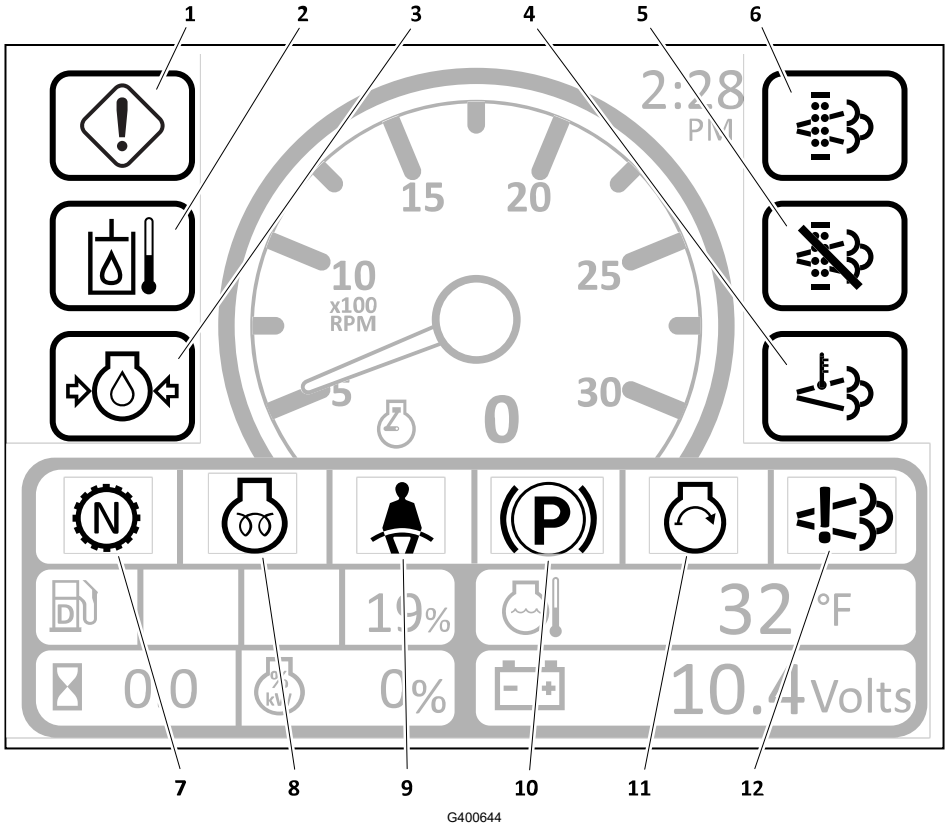

1. Engine caution/stop indicator
2. Hydraulic fluid temperature indicator
3. Engine oil pressure indicator
4. High exhaust temperature indicator
5. Exhaust cleaning disabled indicator
6. Exhaust cleaning indicator
7. Neutral status indicator
8. Cold start wait indicator
9. Operator presence indicator
10. Parking brake indicator
11. Engine crank indicator
12. NOX control diagnostic

Legacy Display (continued)

Gauges

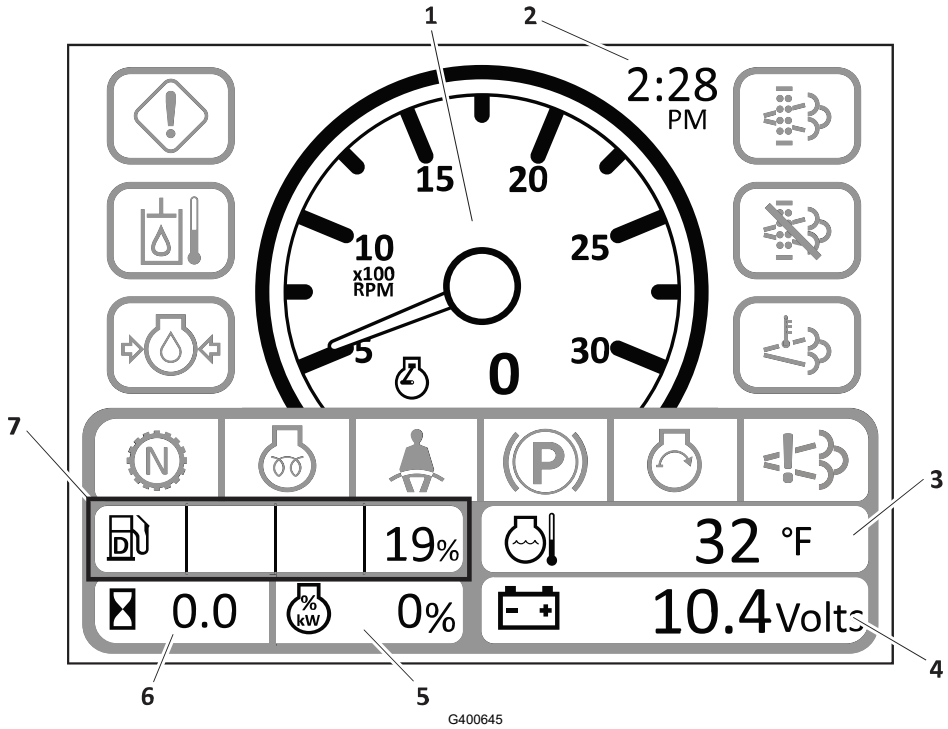

1. Tachometer
2. Clock
3. Engine coolant temperature gauge
4. Voltmeter
5. Engine load percentage
6. Hourmeter
7. Fuel gauge

Keys

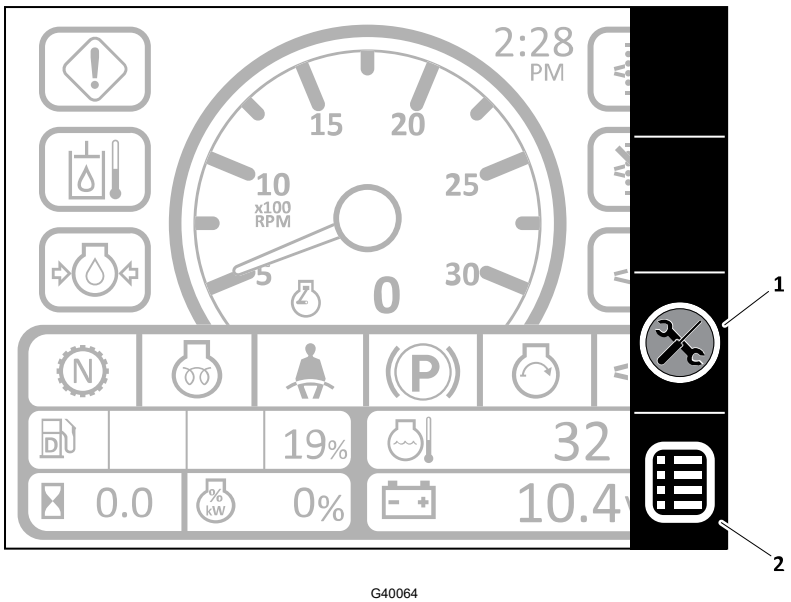

1. Hide/Recall diagnostics key
2. Main menu key

Specifications

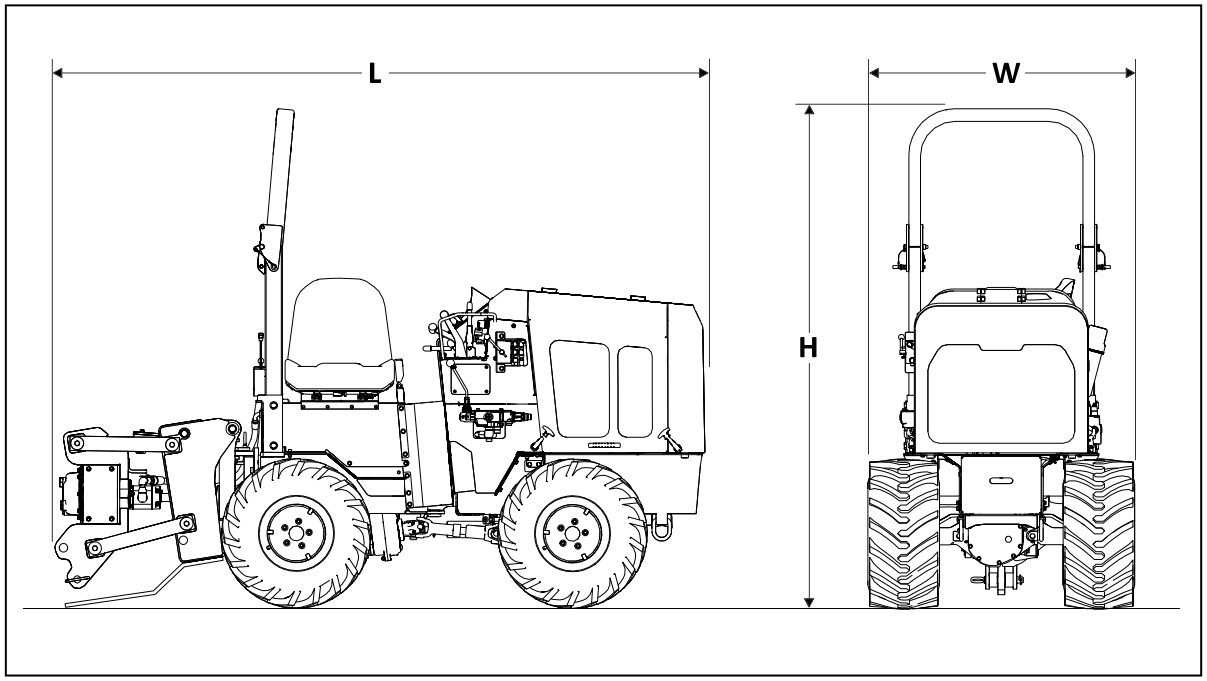

G409123

Note: Specifications and design are subject to change without notice.

Width (with 23 inch tires in the narrow configuration)	92.7 cm (36.5 inches)
Width (with 23 inch tires in the wide configuration)	119 cm (47 inches)
Width (with 26 inch tires in the narrow configuration)	103.6 cm (40.8 inches)
Width (with 26 inch tires in the wide configuration)	118.6 cm (46.7 inches)
Width (with 23 inch dual tires)	147 cm (58 inches)
Width (with 26 inch dual tires)	167.6 cm (66 inches)
Length	300 cm (118 inches)
Height (with 23 inch tires and folded roll bar)	167 cm (65.7 inches)
Height (with 23 inch tires and roll bar in operating position)	217.2 cm (85.5 inches)
Height (with 26 inch tires and folded roll bar)	170.7 cm (67.2 inches)
Height (with 26 inch tires and roll bar in operating position)	221 cm (87 inches)
Weight (with plow, hydra borer, and 26 inch tires)	1,439 kg (3,172 lb)
Wheelbase	122 cm (48 inches)

Minimum turning radius (outside, with 23 inch tires standard configuration)	297.2 cm (117 inches)
Minimum turning radius (inside, with 23 inch tires standard configuration)	177.8 cm (70 inches)
Minimum turning radius (outside, with 63 inch tires standard configuration)	287 cm (113 inches)
Minimum turning radius (inside, with 26 inch tires standard configuration)	169.5 cm (66.75 inches)

Trencher Specifications

Note: Specifications and design are subject to change without notice.

Trench width, max	15.2 mm (6 inches)
Trench depth	60.96 or 91.4 mm (24 or 36 inches)
Offset	18.8 cm (7.4 inches)

Hydra Borer Specifications

Note: Specifications and design are subject to change without notice.

Max Torque	464 N•m (342 ft-lb)

Attachments/Accessories

A selection of Toro approved attachments and accessories is available for use with the machine to enhance and expand its capabilities. Contact your Authorized Service Dealer or authorized Toro distributor or go to www.Toro.com for a list of all approved attachments and accessories.

To ensure optimum performance and continued safety certification of the machine, use only genuine Toro replacement parts and accessories.

Before Operation

Before Operation Safety

- Never allow children or untrained people to operate or service the machine. Local regulations may restrict the age or require certified training of the operator. The owner is responsible for training all operators and mechanics.
- Review jobsite hazards, safety and emergency procedures, and individual responsibilities with all personnel before beginning work on the job site.
- Classify the jobsite based on its hazards, and use the correct tools and machinery, safety equipment, and work methods for the jobsite.
- Inspect the area where you will use the equipment for uneven surfaces and hidden hazards.
- Contact your local marking service and have them mark the location of other objects, including underground storage tanks, wells, and septic systems.
- Contact your Authorized Service Dealer if you have questions about how to operate, maintain, or use your machine.
- Become familiar with the safe operation of the equipment, operator controls, and safety decals.
- Know how to stop the machine and shut off the engine quickly.
- Ensure that the guards, safety switches, and other protective devices are in place and functioning properly; otherwise, do not operate the machine.
- Replace any missing or damaged protective devices and safety signs.
- At the beginning of the work day, thoroughly inspect the machine before operating it. Repair or replace any worn or damaged parts.
- Locate the pinch-point areas marked on the machine and attachments; keep your hands and feet away from these areas.
- Wear appropriate clothing including eye protection, long pants, substantial slip-resistant footwear, hearing protection, gloves, and a hard hat. Tie back long hair and do not wear loose clothing or loose jewelry.
- Read the trailer operator’s manual before loading or transporting the machine.
  - Always tie down equipment and properly stow accessories, even if traveling short distances.
  - Ensure that the tow vehicle has the proper tow-capacity rating.
  - Attach the trailer to the vehicle before loading or unloading the machine.
  - Load and unload the trailer on level ground.

Before Operation Safety (continued)

– To help prevent trailer sway, load the trailer so that 10 to 15 percent of the total vehicle weight (equipment plus trailer) is on the tongue.

Fuel Safety

- Use extra care when handling fuel. It is flammable and its vapors are explosive. Keep heat, flames, sparks, and other ignition sources away.
- Extinguish all cigarettes, cigars, pipes, and other sources of ignition.
- Use only an approved fuel container.
- Do not remove the fuel cap or fill the fuel tank while the engine is running or hot.
- Do not add or drain fuel in an enclosed space.
- Do not store the machine or fuel container where there is an open flame, spark, or pilot light, such as on a water heater or other appliance.
- If you spill fuel, do not attempt to start the engine; clean up the spill immediately to avoid creating any source of ignition until the fuel vapors have dissipated.
- Do not fill containers inside a vehicle or on a truck or trailer bed with a plastic liner. Always place containers on the ground, away from your vehicle before filling.
- Remove the equipment from the truck or trailer and refuel it while it is on the ground. If this is not possible, then refuel from a portable container rather than a fuel-dispenser nozzle.
- Keep the fuel-dispenser nozzle in contact with the rim of the fuel tank or container opening at all times until fueling is complete. Do not use a nozzle lock-open device.

Fuel

Fuel Specifications

Capacity	26.9 L (7.1 US gallons)
Cetane rating	45 or higher
Sulfur content	Ultra-low sulfur (<15 ppm)

ASTM D975 No. 1-D S15 No. 2-D S15	USA
EN 590:96	European Union
ISO 8217 DMX	International
BS 2869-A1 or A2	United Kingdom
JIS K2204 Grade No. 2	Japan
KSM-2610	Korea

Fuel (continued)

Use only clean, fresh diesel fuel or biodiesel fuels.

Purchase fuel in quantities that can be used within 180 days to ensure fuel freshness.

IMPORTANT

Use only ultra-low sulphur diesel fuel. Fuel with higher rates of sulfur degrades the diesel oxidation catalyst (DOC), which causes operational problems and shortens the service life of engine components.

Failure to observe the following cautions may damage the engine.

- **Never use kerosene or gasoline instead of diesel fuel.**
- **Never mix kerosene or used engine oil with the diesel fuel.**
- **Never keep fuel in containers with zinc plating on the inside.**
- **Do not use fuel additives.**

Use summer-grade diesel fuel (No. 2-D) at temperatures above -7°C (20°F) and winter-grade fuel (No. 1-D or No. 1-D/2-D blend) below that temperature.

Note: Use of winter-grade fuel at lower temperatures provides lower flash point and cold flow characteristics which eases starting and reduces fuel filter plugging.

Using summer-grade fuel above -7°C (20°F) contributes toward longer fuel pump life and increased power compared to winter-grade fuel.

Using Biodiesel

This machine can also use a biodiesel-blended fuel of up to B20 (20% biodiesel, 80% petrodiesel).

Sulfur content	Ultra-low sulfur (<15 ppm)
Biodiesel fuel specification	ASTM D6751 or EN14214
Blended fuel specification	ASTM D975, EN590 or JIS K2204

Note: The petroleum diesel portion must be ultra-low sulfur.

Observe the following precautions:

- Biodiesel blends may damage painted surfaces.
- Use B5 (biodiesel content of 5%) or lesser blends in cold weather.
- Monitor seals, hoses, gaskets in contact with fuel as they may degrade over time.
- Fuel filter plugging may occur for a time after you convert to biodiesel blends.
- For more information on biodiesel, contact your Authorized Service Dealer.

Fuel (continued)

Filling the Fuel Tank

1. Park the machine on a level surface, shut off the engine, and allow it to cool.
2. Clean around the fuel tank cap and remove it.
3. Add fuel to the fuel tank until the level is just below the bottom of the filler neck.

   Note: This space in the tank allows fuel to expand. Do not fill the fuel tank completely full.
4. Install the fuel tank cap securely.
5. Wipe up any spilled fuel.

Start Interlock System

For the machine to start, the operator must be in the seat and the ground drive and attachment controls must be in neutral. If one or more of these conditions are not met, a pop-up message will appear and machine will not start.

Performing Daily Maintenance

Before starting the machine each day, perform the Each Use/Daily procedures listed in the Maintenance Schedule.

During Operation

During Operation Safety

- The owner/user can prevent and is responsible for accidents that may cause personal injury or property damage.
- Use your full attention while operating the machine. Do not engage in any activity that causes distractions; otherwise, injury or property damage may occur.
- Do not operate the machine when you are tired, ill, or under the influence of alcohol or drugs.
- Ensure that all the drives are in neutral and engage the parking brake (if equipped) before starting the engine. Start the engine only from the operator's position.
- Keep your hands and feet away from the moving components and attachments. Stay away out of their range of movement.
- Do not carry passengers on the machine. Only the operator is allowed on the machine.
- Do not jerk the controls; use a steady motion.
- Stop operating the machine if anything does not look or feel right and investigate the source of the problem.
- Look behind and down before backing up to ensure that the path is clear.
- Operate the machine only in good light, keeping away from holes and hidden hazards.

During Operation Safety (continued)

- Do not operate the machine when there is the risk of lightning.
- Contact with buried electrical lines will cause death or serious injury. Know the location of the lines and stay away from them.
- Use care when approaching blind corners, shrubs, trees, or other objects that may obscure vision. Know the clearance of the machine and its turning radius. Survey the field of vision whenever you operate the machine.
- Slow down and use caution when making turns and crossing roads and sidewalks. Watch for traffic.
- Stop the machine, shut off the engine, and remove the key before servicing or fueling.
- Before leaving the operating position, do the following:
  - Park the machine on a level surface.
  - Engage the parking brake.
  - Lower the attachments.
  - Shut off the engine and remove the key.
- Use only Toro-approved attachments and accessories. Attachments can change the stability and the operating characteristics of the machine.
- Stop the attachment when you are not working.

  Note: In the event of an emergency, release all controls, move ground drive control to neutral, and shut off the machine.
- Do not operate machine where flammable gas may be present.
- Operate the machine only in well-ventilated areas.
- Check for overhead clearance (i.e., electrical wires, branches, and doorways) before driving under any objects and do not contact them. Use a spotter if necessary.
- Operate the machine only in areas where there is sufficient clearance for you to safely maneuver. Be aware of obstacles in close proximity to you. Failure to maintain adequate distance from trees, walls, and other barriers may result in injury as the machine backs up during operation if you are not attentive to the surroundings.
- Do not exceed the rated operating capacity, as the machine may become unstable, which may result in loss of control.
- Never leave a running machine unattended.

If an Electric Line is Damaged

- Contact with buried electrical lines will cause death or serious injury. Know the location of the lines and stay away from them.
- When working near electric cables, remember the following:
  - Electricity follows all paths to ground, not just the path of least resistance.
  - Pipes, hoses, and cables conduct electricity back to all equipment.
  - Low voltage current can injure or kill you. Many work-related electrocutions result from contact with less than 440 volts.

During Operation Safety (continued)

- Most electric strikes are not noticeable, but indications of a strike include:
  - Power outage
  - Smoke
  - Explosion
  - Popping noises
  - Arcing electricity

  If any of these occur, assume an electric strike has occurred.

If you suspect that an electric line is damaged, do not move and take the following actions. (The order and degree of action will depend on the situation):

- If you are on the machine, remain on the machine, raise the attachments, and move the machine away from the immediate area.
- If you are off the machine,
  - **Do not touch any equipment.**
  - If you must leave the area, take small steps with your feet close together to reduce the hazard of being shocked from one foot to the other.
- Warn people nearby that an electric strike has occurred. Instruct them to leave the area.
- Have someone contact the electric company to shut off the power.
- If you leave the area, do not return to the jobsite or allow anyone to enter the area until given permission by the utility company.

If a Gas Line is Damaged

If you suspect that a gas line has been damaged, take the following actions. The order and degree of action will depend on the situation.

- Immediately shut off engine(s) if you can do it safely and quickly.
- Remove any ignition source(s) if you can do it safely and quickly.
- Warn others that a gas line has been cut and that they should leave the area immediately.
- After warning others to leave the area, leave the jobsite as soon as possible.
- Call your local emergency service and utility company immediately.
- If jobsite is along the street, keep the traffic away from the jobsite.
- Do not return to jobsite until given permission by emergency personnel and the utility company.

If the Machine Catches on Fire

Perform the emergency shutdown procedure and then take the following actions. The order and degree of action will depend on the situation.

During Operation Safety (continued)

- Immediately move the battery disconnect switch (if equipped and accessible) to the DISCONNECT position.
- If the fire is small and a fire extinguisher is available, extinguish the fire.
- If you cannot extinguish the fire, leave the area as soon as possible and contact emergency personnel.

If a Fiber Optic Cable is Damaged

Do not look into the cut end of a fiber optic cable or an unidentified cable. Doing so may damage your vision. Contact the utility company.

Slope Safety

⚠ WARNING ⚠

Tipover hazard. Crushing can cause death or serious injury. Follow procedure in *Operator's Manual*. Drive cautiously.

To help avoid injury:

- **Operate the machine at slow speed on slopes or while operating on rough terrain.**
- **Avoid operating the machine across slopes.**
- **Never jerk the control levers. Use a steady, even motion.**
- **Always operate the machine with the heavy end uphill.**
- **When driving on slopes, drive the machine with the attachments low to the ground.**
- **When the machine is configured with the narrow wheel option, only operate on level ground.**

Operating safely on a slope depends upon many factors, including the following:

- The distribution of the machine weight, including the reel carrier load and the absence of a load
- The height of the attachments
- Even or rough ground conditions
- The potential for ground giving way, causing an unplanned tilt forward, reverse, or sideways
- The nearness of ditches, ruts, stumps or other obstructions and sudden changes in slope
- Speed
- Turning
- Braking performance
- Operator skill

Slope Safety (continued)

- Follow procedures and rules for operating on slopes. These procedures must include surveying the site to determine which slopes are safe for machine operation. Always use common sense and good judgment when performing this survey.
- Avoid starting or stopping on a slope. If the machine loses traction, proceed slowly, straight down the slope.
- Avoid turning on slopes. If you must turn, turn slowly and keep the heavy end of the machine uphill.
- Keep all movements on slopes slow and gradual. Do not make sudden changes in speed or direction.
- If you feel uneasy operating the machine on a slope, do not do it.
- Watch for holes, ruts, or bumps, as uneven terrain could overturn the machine. Tall grass can hide obstacles.
- Use caution when operating on wet surfaces. Reduced traction could cause sliding.
- Evaluate the area to ensure that the ground is stable enough to support the machine.
- Use caution when operating the machine near the following:
  - Drop-offs
  - Ditches
  - Embankments
  - Bodies of water
- The machine could suddenly roll over if a tire goes over the edge or the edge caves in. Maintain a safe distance between the machine and any hazard.
- Do not remove or add attachments on a slope.
- Do not park the machine on a slope.

Adjusting the Roll Bar

⚠ WARNING ⚠

A rollover can cause injury or death.

- **Keep the roll bar in the raised locked position.**
- **Use the seat belt.**

Adjusting the Roll Bar (continued)

⚠ WARNING ⚠

There is no rollover protection when the roll bar is lowered.

- **Lower the roll bar only when absolutely necessary for hauling or parking.**
- **Do not wear the seat belt when the roll bar is lowered.**
- **Do not operate the machine on uneven ground with a lowered roll bar.**
- **Drive slowly and carefully.**
- **Raise the roll bar as soon as clearance permits.**
- **Check carefully for overhead clearances (e.g., branches, doorways, or electrical wires) before driving under any objects and do not contact them.**

1. Remove the pins from the roll bar.
2. Raise or lower the roll bar and secure it in place with the pins.

Starting and Shutting Off the Engine

Starting the Machine

1. Raise and lock the roll bar.
2. Fasten and adjust the seat belt.
3. Ensure that the start interlock conditions are met.
4. Ensure that all of the controls are in neutral.
5. Move the throttle lever to SLOW.
6. Turn the key to ON.
7. Once the cold start indicator is off, turn the key to START.
8. Run the machine at low throttle under a light load for 3 minutes before applying a heavier load.

IMPORTANT

If starting the machine in cold weather:

1. **Gradually increase the engine speed for up to 30 minutes to warm up the engine and hydraulic fluids.**
2. **Operate all of the hydraulic controls at low throttle until the controls operate as described in the Controls chapter.**

Starting and Shutting Off the Engine (continued)

Shutting Off the Machine

1. Move the machine to a level surface.
2. Engage the parking brake.
3. Lower any attachments to the ground.
4. Set all controls to NEUTRAL.
5. Move the throttle lever to SLOW.
6. Turn the ignition key to OFF.

   Note: If the engine has been working hard or is hot, let it idle for 5 minutes before turning the ignition key off. This helps cool the engine before it is stopped. In an emergency, you can shut off the engine immediately.

   Note: If you are leaving machine unattended, remove the key.
7. For maintenance or long-term storage, disconnect the battery using the battery disconnect switch.

IMPORTANT

Wait 2 minutes after shutting off the engine before disconnecting the battery.

Plow

Positioning the Machine

1. Start the engine.
2. Drive the machine to the starting point, in line with the planned path.
3. Engage the parking brake.
4. Remove the plow rotation pin and place it in the storage location.
5. Lower the plow blade to the starting point of the trench.
6. Shut off the machine.

Plow (continued)

Attaching the Product

1. Insert the material into the pulling grip.
2. Tape the grip with duct tape.
3. Remove the cable guide.

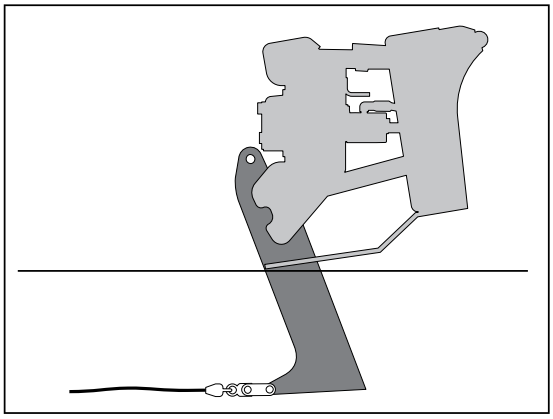

G425616

4. Feed the cable through the tube from the top to the bottom.
5. Replace the cable guide and tighten the fasteners.
6. Secure the cable.

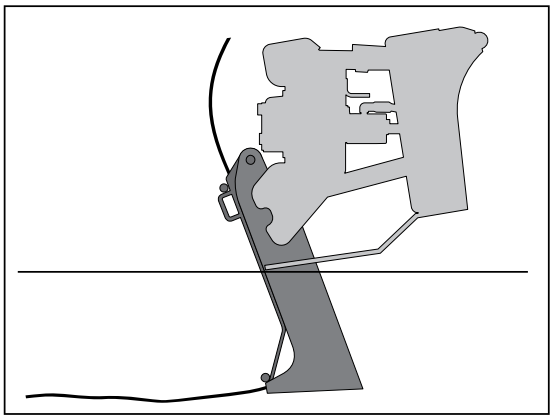

G425615

Preparing the Machine for Plowing

1. Start the engine.
2. Set the throttle to SLOW.
3. Disengage the parking brake.
4. Move the ground drive control to SLOW.

Plowing

1. Move the ground drive control forward to the plowing speed and lower the plow blade into the ground.

   Note: Do not drive the machine in reverse with the plow blade in the ground.
2. Set the throttle to FAST.
3. Move the plow vibrator control to ON.

   Note: Do not operate the vibrator unless the plow is in the ground.
4. Lower the plow blade into the ground to its full depth.

Plow (continued)

5. Reduce the attachment speed to a point with the least machine vibration and the highest ground drive speed possible.
6. Check the installed product for any damage during plowing.

Finishing the Job

1. When the installation is complete, move the ground drive control to NEUTRAL.
2. With the vibrator running, raise the plow to ground level while reducing the vibrator speed.

   Note: Do not operate the vibrator when the plow is out of the ground.
3. Move the plow vibrator control to OFF.
4. Engage the parking brake.
5. Shut off the machine and remove the product from the plow.
6. Swing the plow to the center position and engage the swing lock.
7. Start the engine.
8. Disengage the parking brake.
9. Drive a short distance away from the work site.
10. Shut off the machine.

Trench

Setting Up for Trenching

1. Fasten and adjust the seat belt.
2. Start the machine.
3. Drive to the starting point. Move in line with the planned trench.
4. Lower the boom to just above the ground.
5. Check that the attachment and ground drive controls are in neutral.

Digging a Trench

⚠ WARNING ⚠

Thrown objects can cause death or serious injury. Stay away from moving objects.

To help avoid injury:

- **Keep everyone at least 2 m (6 feet) from the machine, attachments, and their range of movement.**
- **Know the soil conditions and adjust the digging speed accordingly.**

Trench (continued)

1. Select the trencher chain direction.

   The digging chain will move.

⚠ DANGER ⚠

Contact with moving digging teeth will cause death or serious injury. Stay at least 1.8 m (6 feet) away.

To help avoid injury:

- **Allow 1 m (3 feet) between the digging teeth and an obstacle. The machine may jerk when digging starts.**
- **Keep everyone at least 2 m (6 feet) from the machine, attachments, and their range of movement.**
- **Ensure that the parking brake is engaged.**
- **Trench cave-in or material caught in the digging chain can result in contact with the digging teeth.**

---

2. Set the throttle to FAST.
3. Slowly lower the digging boom to the desired trench depth.
4. Pull the ground drive controls to drive the machine in the reverse.
5. Set the speed.

IMPORTANT

- **Do not make sharp turns. Lower the boom to its full depth when turning.**
- **If an object becomes lodged in the chain, stop the chain movement and raise the boom slightly. Reverse the chain direction. If the object must be removed manually, turn the engine off and engage the parking brake.**

Note:

- Always start trenching with the ground drive speed set to LOW.
- Always operate the trencher while driving in reverse.
- Increase the ground drive speed only as the soil conditions permit.
- Operate the engine at full throttle when working.

Finishing the Trenching Job

1. When the trench is complete, stop machine movement.
2. Set the throttle to SLOW.

Trench (continued)

3. Raise the boom.
4. As the boom clears the top of the trench, set the trencher control lever to NEUTRAL.
5. Drive a short distance away from the work site.
6. Engage the parking brake.
7. Shut off the machine.

Trench Systems and Equipment

Chain Selection

These charts are meant as a guideline only. No one chain type works well in all conditions. Contact your Authorized Service Dealer for soil conditions and chain recommendations for your area. Ask for the latest Chain, Teeth, and Sprockets Parts Catalog.

- 1 = best
- 2 = better
- 3 = good
- 4 = not recommended

Soil	Description
Sandy soil	Sugar sand, blow sand, or other soils where sand is the predominant component
Soft soil	Sandy loam
Medium soil	Loams, loamy clays
Hard soil	Packed clays, gumbo, all compacted soils
Rocky soil	Chunk rock, glacial till, cobble, rip rap, gravel
Sticky soil	Gumbo, sticky clays

Chain	Sandy Soil	Soft Soil	Medium Soil	Hard Soil	Rocky Soil	Sticky Soil
2–pitch cup tooth	2	3	1	1	3	4
4–pitch cup tooth	3	1	2	3	4	1
Alternating side bar	4	4	4	4	4	1
Bolt-on adapter, 2–pitch	4	3	2	1	2	4
Bolt-on adapter, cup tooth combo	4	3	2	1	2	4

Trench Systems and Equipment (continued)

Chain and Tooth Maintenance

- Always replace sprockets at the same time as the digging chain. The sprockets and the chain are designed to work together. Replacing one without the other will cause premature wear of the new part.
- Keep the digging chain sharp. Using dull, worn teeth will decrease production and increase the shock load to the other trencher components. It can also cause chain stretch, which leads to premature wear and failure.
- Maintain a proper amount of tension on the digging chain. If the machine is too loose or too tight, efficiency decreases and the parts wear more quickly. Overtightening will cause chain stretch and loss of machine performance.
- Use the tooth pattern most appropriate for the digging conditions. If conditions change, contact your Authorized Service Dealer for information about the most effective chain type and tooth pattern.

Trench Systems and Equipment (continued)

Chain Type

Chain Type	Features
2–pitch	More teeth for smoother cutting
4–pitch	Standard chain
Alternating side bar	Prevents soil compaction on chain
Bolt-on adapters	Allows easy configuration changes
Combination	Provides pick and shovel effect

Drill

Digging the Trenches

1. Mark planned bore path and all located utility lines with flags or paint.
2. Dig both trenches at least 10 cm (4 inches) wide and 45.72 cm (18 inches) deep.
3. Dig the approach trench ① at least 216.36 cm (7 ft) long.

   Note: The approach trench should be perpendicular to the sidewalk ② or driveway.
4. Dig the target trench ③ to be 91.44 cm (3 ft) to 182.88 cm (6 ft) long.

   Note: The target trench should be centered across from the approach trench.

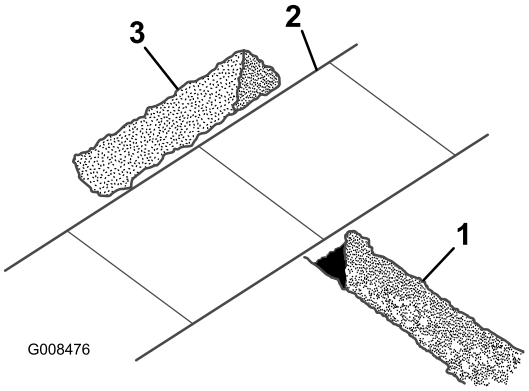

g008476

Boring the Hole

⚠ DANGER ⚠

Contact with the rotating shaft will cause death or serious injury. Stay at least 2 m (6 ft).

To help avoid injury

- **Keep everyone at least 3 m (10 ft) away from the drill string and machine unless the rod guide tool is need.**
- **Never force the drilling process. The drilling bit will drift off course and the rod sections may bow or break. Proceed slowly and carefully.**
- **Never drill with a bent rod section.**

Drill (continued)

⚠ WARNING ⚠

Underground utilities contact can cause death or serious injury. Locate and verify underground utilities before digging or drilling.

To help avoid injury: Only operate the drilling attachment if the bore path is more than 3 m (10 ft) from any underground hazard.

IMPORTANT

Boring is a 2 person operation. Do not attempt to perform this operation by yourself.

1. With the person guiding the boring bit positioned to the right of the trench, start the machine, set it to low throttle, and push the hydra-borer-control lever forward to start the forward rotation of the drill bit.
2. Slowly move the machine forward, while the person with the rod guide tool guides the boring bit into the soil.
3. Once the entire drill bit is in the soil, return all controls to neutral.
4. Turn off the machine and wait for all moving parts to stop.
5. Carefully monitor the drill string to ensure the rod is not bowing or whipping in the trench.
6. Remove the rod guide tool.
7. Start the machine and push the control lever forward to start the boring bit.
8. Slowly move the machine forward as the boring bit digs into the soil.

IMPORTANT

Do not drive too fast, forcing the bit into the soil. Allow the bit to progress at its own rate. Do not push or pull the bit through the soil when the drive head is not turning.

9. When about 15 cm (6 inches) of rod are left showing in the entrance trench or when the boring bit completely enters and bores into the far side of the exit trench, stop the machine, return the control lever into neutral, and stop the engine.
10. If the boring bit has not yet entered the target trench, complete the following:
    A. Detach the rod from the drive head.
    B. Start the engine and back up to the end of the approach trench.
    C. Stop engine and wait for all moving parts to stop.
    D. Connect another rod and repeat steps 7 through 10.

Drill (continued)

Backreaming the Hole

Sometimes it is necessary to drill a pilot hole first, then enlarge the hole to accommodate larger product. As a general rule, the final hole should be 1.5 times larger than the diameter of the product being installed. The number of passes needed depends on the soil conditions.

1. With a shovel, carefully dig ③ around the boring bit, in the target trench ②, clearing it of soil until it can be removed.
2. Turn off the machine.
3. Remove the boring bit and attach the backreamer ④.
4. Attach the product being installed to the swivel ⑤ on the end of the backreamer.

   Note: Pull product through the bore after drilling or at final pass of backreaming.

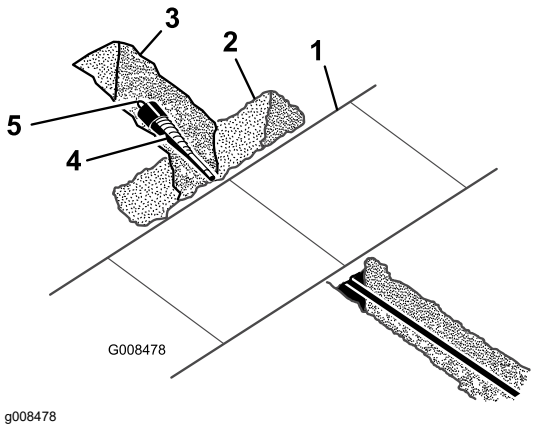

g008478

5. Start the machine and push the control lever forward to start the reamer.
6. Slowly move the machine rearward as the reamer digs into the soil.

IMPORTANT

Do not drive too fast, forcing the backreamer into the soil. Allow the reamer to progress at its own rate. Do not push or pull the backreamer through the soil when the drive head is not turning.

7. When the rod coupling is about 15 cm (6 inches) into the approach trench or when the backreamer completely enters the approach trench with about 15 cm (6 inches) of the cable or piping, stop the machine, pull the control lever into neutral, and turn off the machine.

   Note: Do not have more than 9 m (30 ft) of exposed rod outside the bore. Remove the rods as necessary.

After Operation

After Operation Safety

- Shut off the engine, remove the key, wait for all movement to stop, and allow the machine to cool before adjusting, cleaning, storing, or servicing it.
- Do not touch parts that may be hot from operation. Allow them to cool or wear gloves before attempting to maintain, adjust, or service the machine.
- Clean debris from the attachments, drives, mufflers, and engine to help prevent fires. Clean up oil or fuel spills.

Finishing the Job

1. After the product is installed, return the spoils to the trench with shovels or small earth-moving equipment.
2. Clean the machine.
3. Ensure that tools and accessories are loaded and properly secured on the trailer or truck.

Hauling the Machine

Use a heavy-duty trailer or truck to haul the machine. Use a full-width ramp. Ensure that the trailer or truck has all the necessary brakes, lighting, and marking as required by law. Please carefully read all the safety instructions. Knowing this information could help you or bystanders avoid injury. Refer to your local ordinances for trailer and tie-down requirements.

⚠ WARNING ⚠

Driving on the street or roadway without turn signals, lights, reflective markings, or a slow-moving-vehicle emblem is dangerous and can lead to accidents causing personal injury.

Do not drive the machine on a public street or roadway.

Trailer Requirements

⚠ WARNING ⚠

Loading a machine onto a trailer or truck increases the possibility of tip-over and could cause serious injury or death.

- **Use only a full-width ramp; do not use individual ramps for each side of the machine.**
- **Ensure that the length of ramp is at least 4 times as long as the height of the trailer or truck bed to the ground.**

Trailer Requirements (continued)

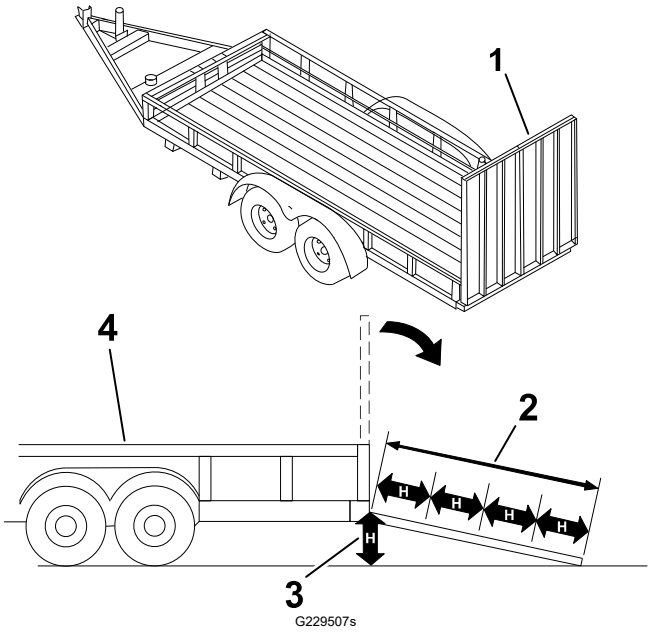

(1) Full-width ramp in stowed position

(2) Ramp is at least 4 times as long as the height of the trailer or truck bed to the ground

(3) H = height of the trailer or truck bed to the ground

(4) Trailer

Loading the Machine

⚠ WARNING ⚠

Loading a machine onto a trailer or truck increases the possibility of tip-over and could cause serious injury or death.

- **Use extreme caution when operating a machine on a ramp.**
- **Load and unload the machine with the heavy end up the ramp.**
- **Avoid sudden acceleration or deceleration while driving the machine on a ramp as this could cause a loss of control or a tip-over situation.**

⚠ WARNING ⚠

Crushing weight could cause death or serious injury. Stay away.

To help avoid injury:

- **Load the machine with the engine at low throttle and the boom as low as possible.**
- **Load the trailer on level ground.**
- **Load the trailer correctly to avoid the trailer swaying.**
- **Attach the trailer to the vehicle before loading or unloading.**
- **10 to 15 percent of the total vehicle weight (equipment plus trailer) must be on the tongue to help prevent the trailer from swaying.**

Loading the Machine (continued)

1. Connect the trailer to the towing vehicle and connect the safety chains.
2. If applicable, connect the trailer brakes.
3. Lower the ramp.
4. Start the engine.
5. Raise the trencher boom, if attached, but keep it low.
6. Fully raise or remove the plow blade and ensure that the plow swing lock is engaged.
7. Disengage the parking brake.
8. Slowly drive the machine onto the trailer.
9. Position the machine on the trailer deck for proper weight distribution.
10. Engage the parking brake.
11. Lower the attachments to the trailer bed and turn the machine off.
12. Attach chains to the machine and attachments at the tie down points, where the tie down decals are located.

Tie-Down Points

Tie-down points are identified by the tie-down decals. Securing the machine to the trailer at other points is unsafe and can damage the machine.

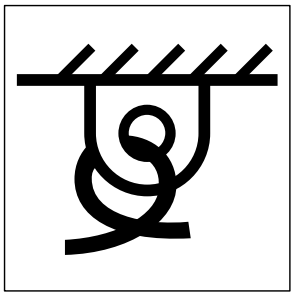

G408867

Tying Down the Machine

IMPORTANT

Use minimum Grade 7, 18.7cm (3/8 inch) transport chain to secure the machine to the trailer.

Loop a transport chain around each tiedown point. See the chart below for the correct distances between tiedown ends. Ensure that the tiedowns are tight before transporting.

Tying Down the Machine (continued)

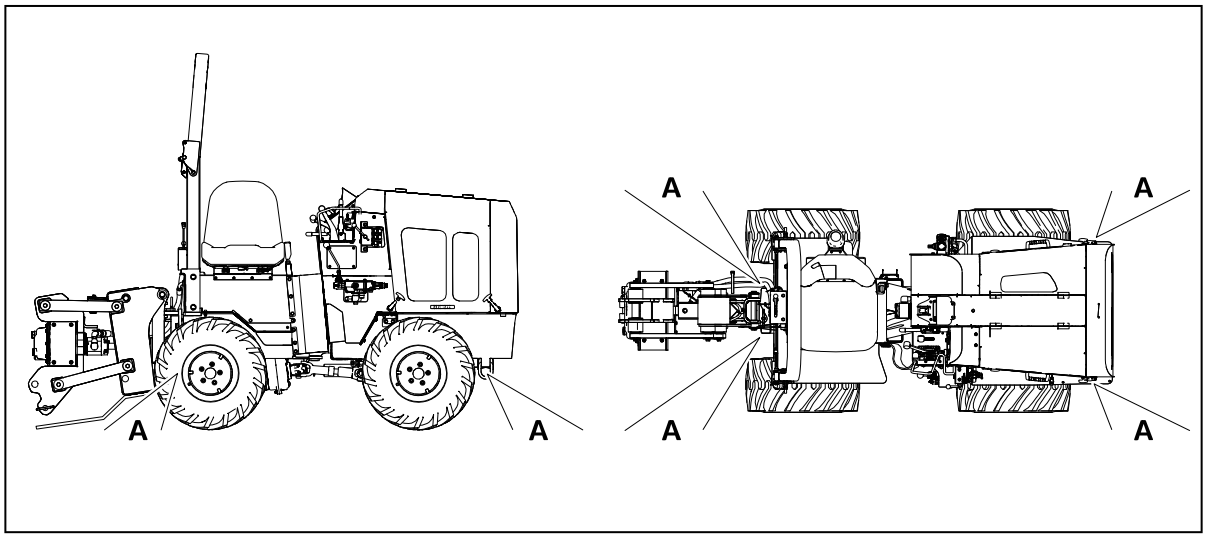

G418233

Distance	Metric	US
A	45.7 to 76.2 cm	18 to 30 inches

Unloading the Machine

⚠ WARNING ⚠

Crushing weight could cause death or serious injury. Stay away.

To help avoid injury:

- **Unload the unit with the engine in low idle and the boom as low as possible.**
- **Unload the trailer on level ground.**
- **Attach the trailer to the vehicle before loading or unloading.**

---

1. Lower the trailer ramp.
2. Remove the chains from the tie-down points.
3. Start the machine.
4. Raise the trencher boom, if attached, but keep it low.
5. Fully raise the plow blade and ensure that the plow swing lock is engaged.
6. Disengage the parking brake.
7. Slowly back the machine down the trailer or ramps.

Retrieving the Machine

Under normal conditions, do not tow the machine. If the machine becomes disabled and retrieval is needed:

- Do not tow the machine for more than 180 m (200 yd).
- Tow the machine at less than 1.5–3.0 km/h (1–2 mph).
- You cannot steer the machine as it is towed.
- Use a maximum towing force of 1.5 times the machine weight.

1. Engage parking brake.
2. Block front and rear tires.
3. Drive the towing vehicle to the front of the machine.
4. Attach the machine to the towing vehicle using the tie down points.
5. Ensure that all controls are in NEUTRAL.
6. Open the bypass valve.
7. Move the driving control in the direction of travel.
8. Disengage the parking brake.
9. After towing:
   A. Move the controls to NEUTRAL.
   B. Engage the parking brake.
   C. Block the wheels.
   D. Disconnect the machine from the towing vehicle.
   E. Turn bypass valve to original position.

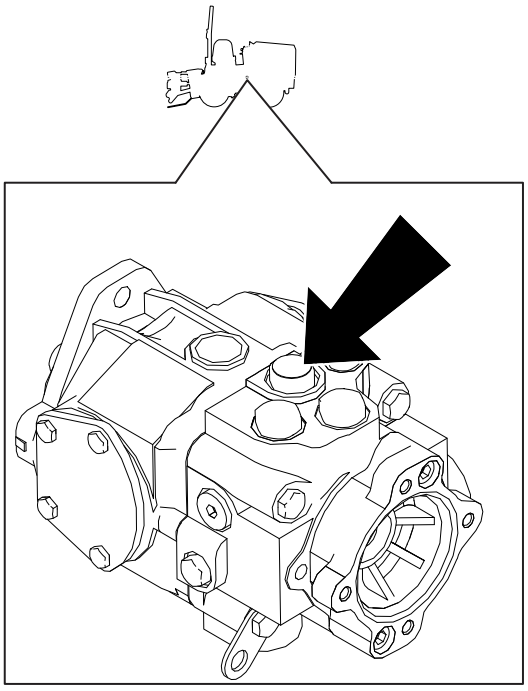

G416164

Maintenance Safety

- Making unauthorized modifications to the machine may result in it no longer meeting safety standards and regulations and/or not functioning properly. Allow only competent and trained personnel to modify the machine according to the applicable standards, regulations, and machine design functionality and requirements.
- Replace the ROPS if it has been modified, damaged, or in a rollover accident.
- Do not allow untrained personnel to service the machine.
- Park the machine on a level surface, disengage the auxiliary hydraulics, lower the attachments, engage the parking brake (if equipped), shut off the engine, and remove the key. Wait for all movement to stop and allow the machine to cool before adjusting, cleaning, storing, or repairing it.
- Refer to the US Occupational Safety and Health Administration (OSHA) guidelines for appropriate lockout-tagout procedures.
- Keep your hands and feet away from the moving parts. If possible, do not make adjustments with the engine running.
- Do not tamper with the safety devices.
- Clean up oil or fuel spills.
- Carefully release pressure from components with stored energy.
- Use jack stands to support raised components when required.
- If welding is required, see your Authorized Service Dealer.

Recommended Maintenance Schedule

Maintenance Service Interval	Maintenance Procedure
After the first 10 hours	Check the Exhaust Clamp
After the first 50 hours	Change the Engine Oil
	Check the Drive Belt Tension
	Change the Hydraulic Filter
After the first 250 hours	Change the Hydraulic Fluid
Before each use or daily	Check the Engine Oil
	Check the Hydraulic Filter
	Check the Tire Pressure
	Drain the Fuel/Water Separator
	Check the Battery
	Check the Engine Coolant Level
	Check the Hydraulic Fluid Level
	Check the ROPS System
	Check the Chain Components
	Check the Trench Cleaner Position
	Check the Trencher Mounting Bolts
Every 10 hours	Check the Engine Oil
	Check the Plow Vibrator Oil
	Check the Plow Vibrator Oil
	Check the Engine Coolant Level
Every 25 hours	Grease the Drive Shaft and U-Joint
	Grease the Plow
Every 50 hours	Drain the Fuel/Water Separator
	Check the Fuel Filter
	Check the Exhaust System
	Check the Radiator Hoses
Every 250 hours	Checking the Air Filter
	Check the Drive Belt Tension
	Check the Axle Oil
	Change the Hydraulic Filter

Maintenance Service Interval	Maintenance Procedure
	Check the Gearbox Oil
	Check the Exhaust Clamp
Every 300 hours	Change the Plow Vibrator Oil
Every 500 hours	Change the Air Filter
	Drain the Fuel/Water Separator
	Clean the Controls Linkage Assembly
	Check the Exhaust System
	Check the Fuel Lines
	Change the Engine Oil
	Change the Fuel Filter
	Replace the Drive Belt
	Check the Roll Bar
Every 1,000 hours	Change the Axle Oil
	Adjust the Traction Drive
	Change the Hydraulic Fluid
	Change the Gearbox Oil
Every 2,000 hours	Check the Exhaust System
	Change the Engine Coolant
Yearly or before storage	Adjust the Parking Brake
	Adjust the Neutral Position
	Check the Hydraulic Lines
	Check the Plow Blade

Lubrication

Greasing the Drive Shaft and U-Joint

Grease Type: General purpose grease.

1. Clean the grease fittings with a rag.
2. Pump grease into the fittings until grease begins to ooze out of the bearings (approximately 3 pumps).

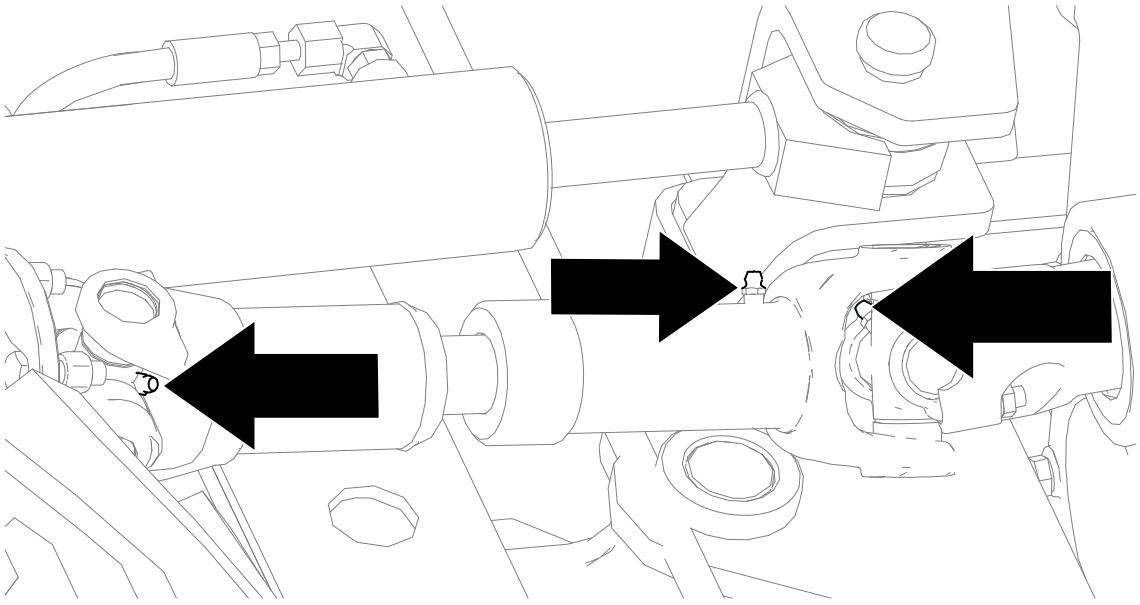

G462130

3. Wipe up any excess grease.

Greasing the Plow

Grease Type: General purpose grease.

1. Clean the grease fittings with a rag.
2. Pump grease into the fittings until grease begins to ooze out of the bearings (approximately 3 pumps).
3. Wipe up any excess grease.

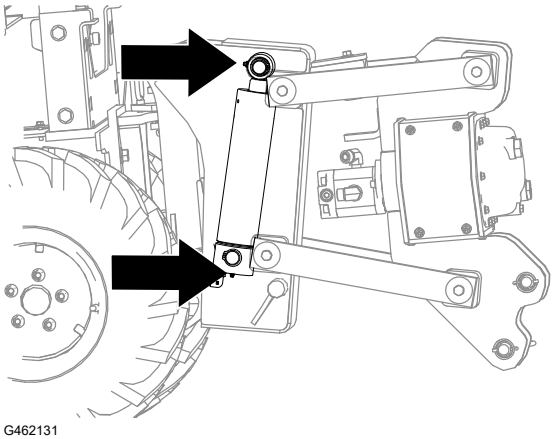

G462131

Engine Maintenance

Engine Safety

- Shut off the engine before checking the oil or adding oil to the crankcase.
- Do not change the engine governor setting or overspeed the engine.
- Keep your hands, feet, face, clothing, and other body parts away from the muffler and other hot surfaces.

Engine Oil Specifications

Note: Specifications and design are subject to change without notice.

Crankcase capacity	5.2 L (5.5 qt)
Oil Type	Detergent diesel engine oil (meeting or exceeding API service classification CJ-4)
Viscosity	See the oil viscosity chart

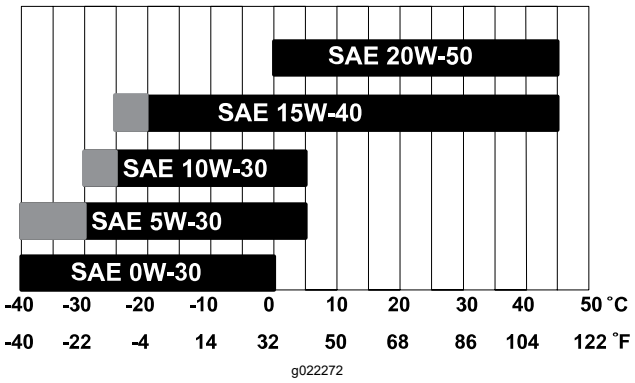

Changing the Air Filter

IMPORTANT

- **Only open the air filter housing when the service indicator lights.**
- **Change the filter elements. Do not attempt to clean them.**
- **An improperly installed primary element can lead to premature engine failure.**
- **Compressed air or water can damage the filter elements.**
- **Tapping the filter elements to loosen dirt can damage the elements.**
- **Changing the air filter before it is necessary can cause dirt to enter the engine.**

Changing the Air Filter (continued)

1. Inspect the air cleaner body for damage. Replace or repair any damaged components.
2. Remove the cover (1).
3. Remove the primary (7) and secondary (3) elements.
4. Wipe the inside of the housing (8) and cover (1).
5. Insert the secondary element (3) and ensure that it is seated correctly.
6. Insert the new primary element.
7. Install the cover with the dust ejector (5) facing down.

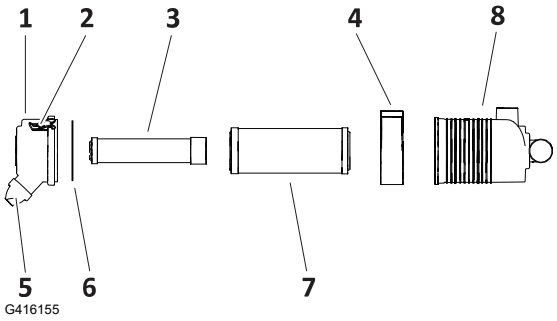

Checking the Engine Oil

1. While the oil is warm, check the level at the dipstick (1).
2. Add oil at the fill point (2) as needed to keep the level at the highest line on the dipstick.

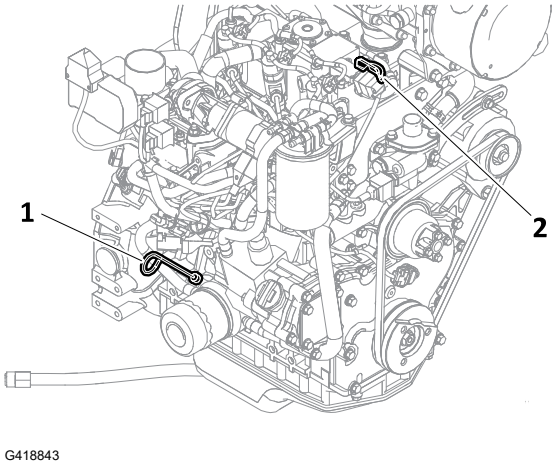

Changing the Engine Oil

1. While the oil is warm, remove the plug (2) to drain.
2. Install the drain plug.
3. Replace the filter (4) each time you change the oil.
4. Add oil at the fill point (3).
5. Start the engine to circulate the oil.
6. Check the oil level.

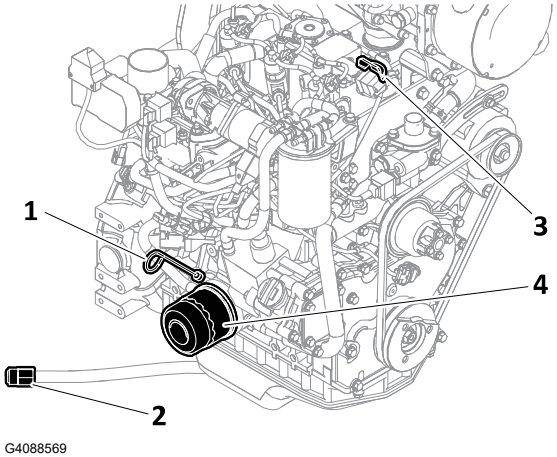

Checking the Exhaust Clamp

Check the clamp and lock screw on the exhaust extension to ensure that it is tight.

Checking the Exhaust System

Check for any loose or damaged components. Check the heat shields near the battery, starter, and air cleaner and replace them if they are damaged.

Fuel System Maintenance

Checking the Fuel Lines

Check the fuel lines and connections for any signs of deterioration, damages, leaks, or loose connections. Tighten any loose connections and contact your Authorized Service Dealer for assistance in fixing damaged fuel lines.

Changing the Fuel Filter

1. Clean the filter head and the outside of the fuel filter.
2. Turn the filter counterclockwise and remove the filter from the filter head.
3. Lubricate the gasket on the new filter canister with clean oil.
4. Install the filter canister by hand until the gasket contacts the filter head, then rotate it an additional 1/2 turn.
5. Start the machine and check for leaks.

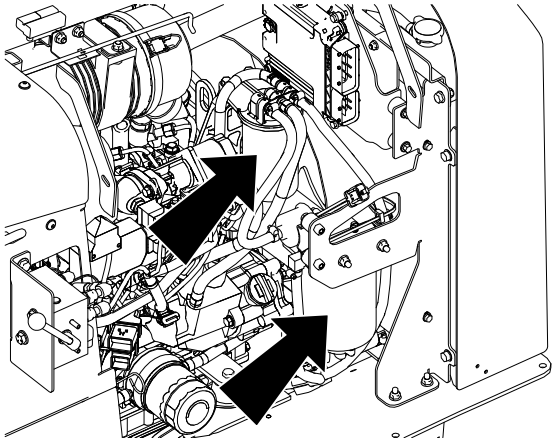

G433381

Draining the Fuel/Water Separator

1. Place a container under the fuel filter.
2. Loosen the filter canister drain valve.
3. After the water has drained, tighten the drain valve.

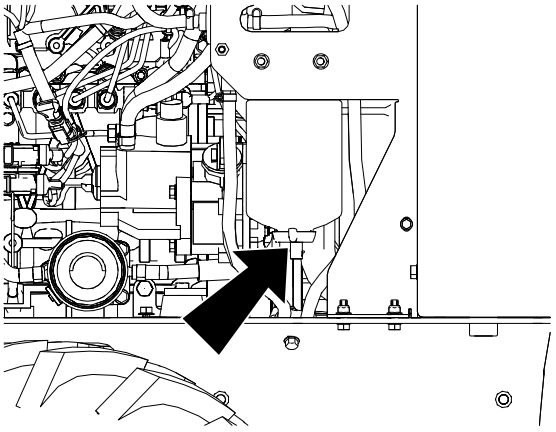

G433380

Electrical System Maintenance

Electrical System Safety

- Disconnect the battery before repairing the machine. Disconnect the negative terminal first and the positive last. Connect the positive terminal first and the negative last.
- Charge the battery in an open, well-ventilated area, away from sparks and flames. Unplug the charger before connecting or disconnecting the battery. Wear protective clothing and use insulated tools.

⚠ WARNING ⚠

Battery acid is corrosive; contacting it can cause death or serious injury.

To avoid injury, do the following:

- **Avoid contact with skin, eyes, and clothing. Wear appropriate gloves and eye protection.**
- **Never attempt to charge a battery that is leaking, bulging, heavily corroded, frozen, or otherwise damaged.**
- **Refer to the safety data sheet (SDS) for additional battery information.**

Electrical System Safety (continued)

⚠ WARNING ⚠

Fire or explosion from explosive hydrogen gas can cause death or serious injury. Keep heat, flames, sparks, and other sources of ignition away.

To help avoid injury:

- **Use a single 12 V maximum source for charging. Never connect the battery to rapid chargers or dual batteries.**
- **Never lean over the battery when making connections.**
- **Never allow the vehicles to touch each other when charging.**
- **Never short-circuit the battery terminals or strike the battery posts or cable terminals.**
- **Refer to the safety data sheet (SDS) for additional battery information.**

Checking the Battery

1. Turn off the machine and remove the key.
2. Turn battery disconnect switch OFF.
3. Ensure that there are no ignition sources near the battery.
4. Loosen and remove the battery cable clamps carefully, negative (-) cable first.
5. Clean the cable clamps and terminals.
6. Check for any signs of corrosion and clean as needed.
7. Connect the battery cable clamps, positive (+) cable first.
8. Tighten any loose connections.

Charging the Battery

⚠ WARNING ⚠

Charging the battery produces gasses that can explode.

Never smoke near the battery and keep sparks and flames away from battery.

1. Disconnect the machine controller.
2. Inspect the battery for signs of cracking, bulging, leaking, or other damage.

Charging the Battery (continued)

3. Connect the red positive (+) jumper cable clamp to the positive (+) post [1] of the battery in the disabled machine.
4. Connect the other red positive (+) jumper cable clamp to the positive (+) post of battery in the service vehicle.
5. Connect the black negative (-) cable clamp to the negative (-) post of battery [2] in the service vehicle.
6. Connect the other black negative (-) cable clamp to the engine or frame ground on the disabled vehicle, at least 31 cm (12 inches) from the failed battery.
7. Charge the battery for 1 hour at 25 to 30 A or 6 hours at 4 to 6 A.

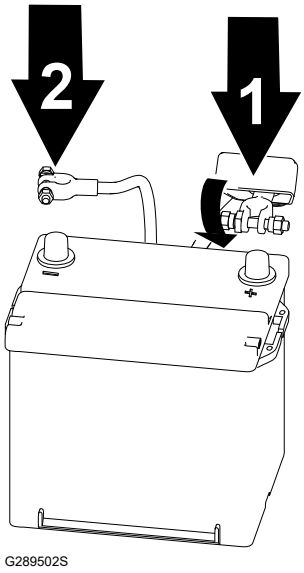

G289502S

IMPORTANT

Do not overcharge the battery.

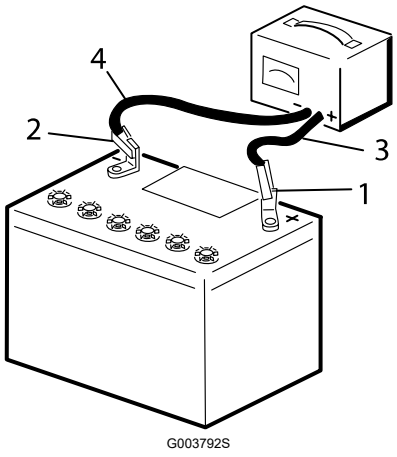

G003792S

[1] Positive battery post
[2] Negative battery post
[3] Red (+) charger lead
[4] Black (-) charger lead

8. Remove the jumper cables from the service vehicle, black negative (-) clamp first. Do not allow the clamps to touch.

Charging the Battery (continued)

9. Remove the black negative (-) cable clamp ① from the disabled machine or frame ground.
10. Remove the red positive (+) cable clamp ② from the disabled machine.
11. Turn the battery disconnect to ON.

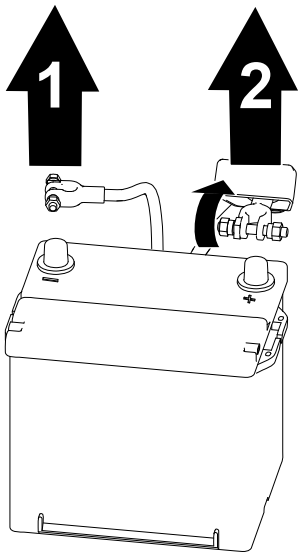

G289503S

Drive System Maintenance

Tire Specifications

Torque (in a crossing pattern)	108 to 135 N•m (80 to 100 ft-lbs)

Tire Size	Ply Rating	Pressure	
		kPa	psi
23 x 10.5 x 12	4	138	20
26 x 12 x 12	8	207	42
Note: Use a lower tire pressure when operating in sandy soil conditions to provide better traction in the loose soil.			

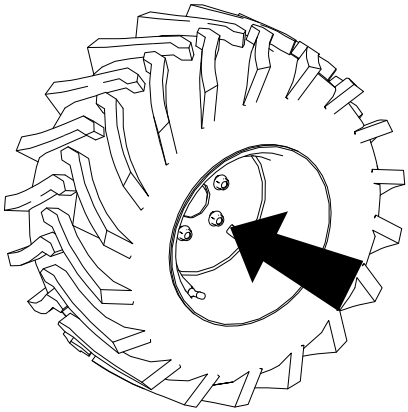

G433377

Changing the Axle Oil

1. Place a drain pan under the pinion housing of the axle.
2. Remove the bolts securing the cover, and remove the cover and gasket.
3. Clean the surfaces.
4. Install a new gasket.
5. Install the cover and drain plug.
6. Remove the fill plug.
7. Add differential oil until the oil is level with the bottom of the fill plug hole.
8. Install the fill plug.
9. Repeat with the other differential.

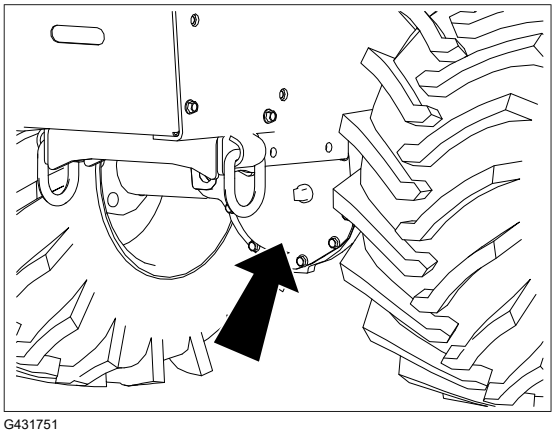

G431751

Gearbox Specifications

Transmission oil	SAE 80W90 limited slip oil
Capacity	0.47 L (0.5 qt)
Axle oil	SAE 80W90 API classification level GL5
Front axle capacity	2.4 L (2.5 US qt)
Rear axle capacity	2.4 L (2.5 US qt)

Checking the Gearbox Oil

1. Open the gearbox oil cap/plug and check the oil level.
2. Add fluid as needed to keep the level at the bottom of the fill plug.

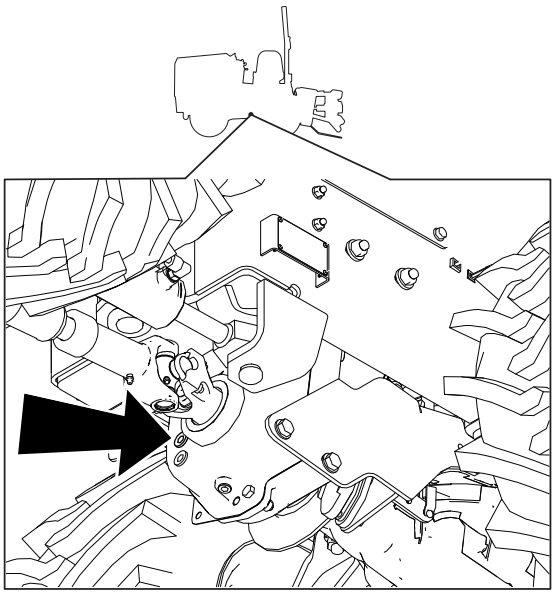

G418829

Changing the Gearbox Oil

1. While the oil is warm, remove the plug ② and drain the tank.
2. Install the plug.
3. Replace the filter each time the oil is changed.
4. Add fluid at the fill point ① until the oil level is even with the bottom of the fill plug.

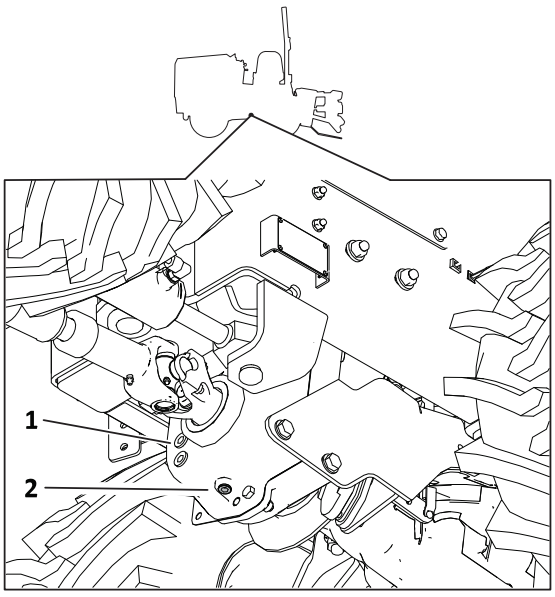

G418828

Cooling System Maintenance

Cooling System Safety

- Swallowing engine coolant can cause poisoning; keep out of reach from children and pets.
- Discharge of hot, pressurized coolant or touching a hot radiator and surrounding parts can cause severe burns. If you must work on or near the radiator, allow it to cool or wear gloves.
- Always allow the engine to cool at least 15 minutes before removing the radiator cap.
- Use a rag when opening the radiator cap, and open the cap slowly to allow steam to escape.

Coolant Specifications

Note: Specifications and design are subject to change without notice.

Coolant Specification	a mixture of 50% ethylene glycol and 50% water
Engine and Radiator Coolant Capacity	10.2 L (10.8 qt)

Checking the Engine Coolant Level

Note: Do not use only water or alcohol/methanol based coolants. Use a mixture.

Checking the Engine Coolant Level (continued)

1. Remove the radiator ① and expansion tank ② caps.
2. Check the coolant level in the radiator.

   Note: Fill the radiator to the top of the filler neck and the expansion tank to the full mark.
3. If the coolant is low, add the mixture to the full mark.
4. Install the radiator cap and expansion tank cap.

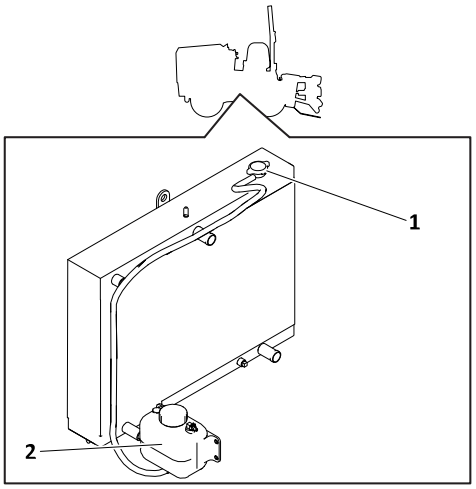

G428621

Changing the Engine Coolant

1. Remove the radiator ① and expansion tank ③ caps and drain plug ②.
2. After the fluid has drained, install the drain plug.
3. Add the coolant mixture at the cap to keep the level at the top of the filler neck and the expansion tank.

   Note: Fill the radiator to the top of the filler neck and the expansion tank to the full mark.
4. Install the cap.

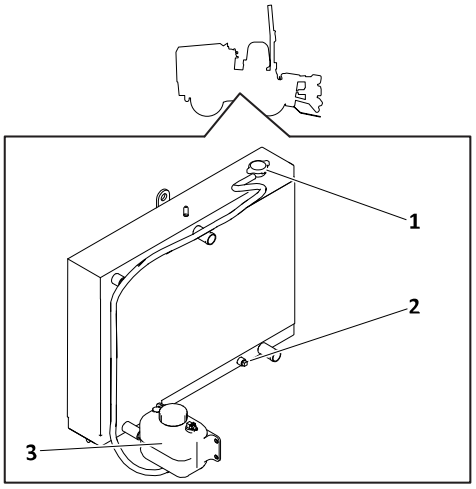

G416157

Checking the Radiator Hoses

Check the radiator hoses for leaks, abnormal swelling, or other signs of deterioration. Check for leaks or corrosion at the water pump and fittings.

Belt Maintenance

Checking the Drive Belt Tension

The belt is properly tensioned when it moves about 7–10 mm (1/4–3/8 inch) when you push it at the long span.

Check the belt for excessive slack, damage, or wear.

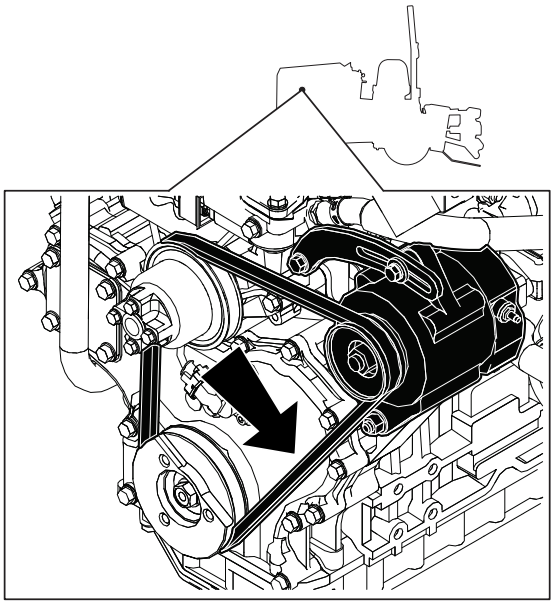

G418844

Adjusting the Drive Belt

1. Loosen the pivot and 2 alternator bolts.
2. Adjust the alternator position as needed.
3. Check the belt tension.
4. Tighten the pivot and alternator bolts.

Replacing the Drive Belt

1. Loosen the four alternator bolts ②③④.
2. Replace the fan belt ①.
3. Adjust the belt tension as needed.
4. Tighten the bolts.
5. Check the tension.

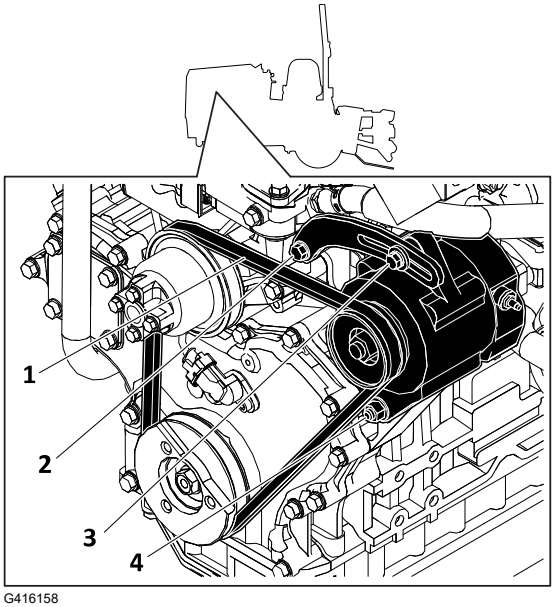

G416158

Controls Maintenance

Adjusting the Parking Brake

1. Shut off the engine.
2. Disengage the parking brake.
3. Rotate the knob ① to adjust the parking brake.
   - Counterclockwise—loosen
   - Clockwise—tighten

   Note: Rotate the knob no more than 1 revolution each time.
4. Test the parking brake.
5. Repeat steps above until the machine does not move forward when the parking brake is engaged.

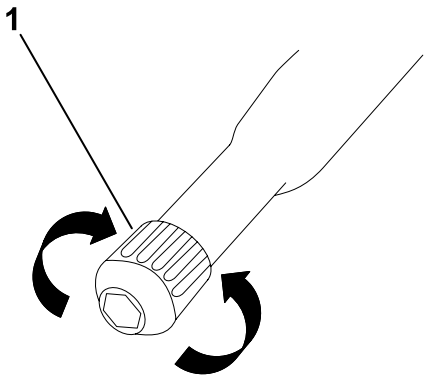

G378801S

Adjusting the Neutral Position

If the machine moves in any direction when you release the traction control lever, adjust the traction drive neutral position.

1. Lower all attachments, engage the parking brake, shut off the machine, and block the tires.
2. Loosen the jam nuts on each end of the traction rod.

Adjusting the Neutral Position (continued)

3. Adjust the adjustment nut ① depending on which way the machine is moving:
   - If the machine is moving forward, turn the nut counter clockwise.
   - If the machine is moving rearward, turn the nut clockwise.
4. Tighten the jam nuts on each end of the rod.
5. Test the machine to see if further adjustment is needed.

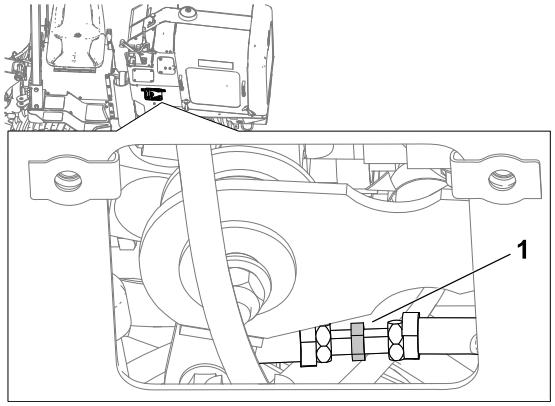

G416197

Cleaning the Controls Linkage Assembly

Spray the direction controls linkage assembly with compressed air.

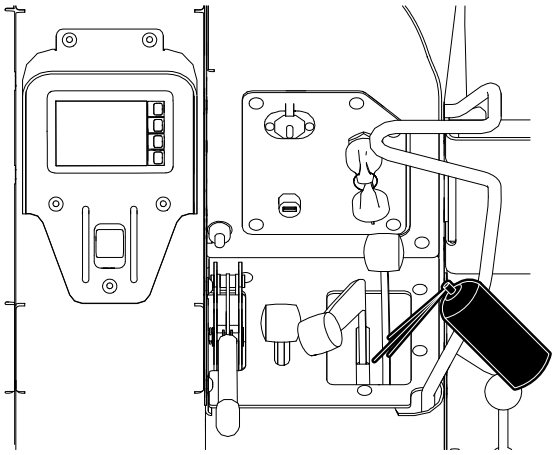
G416166

Hydraulic System Maintenance

Hydraulic System Safety

⚠ WARNING ⚠

Injection from pressurized fluid or air can cause death or serious injury. If you are injured, seek immediate medical attention from a doctor familiar with this type of injury.

To help avoid injury:

- **Before disconnecting a hydraulic line, shut off the engine and operate all the controls to relieve pressure.**
- **Lower, block, or support any raised component with a hoist.**
- **Cover the connection with a heavy cloth and loosen the connector nut slightly to relieve residual pressure. Catch all fluid in a container.**
- **Before using the system, check that all connections are tight and all lines are undamaged.**
- **Use a piece of cardboard or wood, rather than hands, to check for leaks.**
- **Before using the hydraulic system, check that all connections are tight and all lines are undamaged.**
- **Turn the engine off and operate all controls to relieve pressure from the system before performing work or disconnecting a hydraulic line.**

Hydraulic Fluid Specifications

Note: Specifications and design are subject to change without notice.

Hydraulic-Fluid type	Toro Premium Transmission/Hydraulic Tractor Fluid
Hydraulic fluid tank capacity	28.6 L (7.6 US gallons)
Hydraulic fluid system capacity	25.8 L (6.8 US gallons)

Checking the Hydraulic Fluid Level

1. Remove the cap from the filler neck (1) and check the fluid level on the dipstick (2).
2. Add fluid as needed.
3. Install the cap.

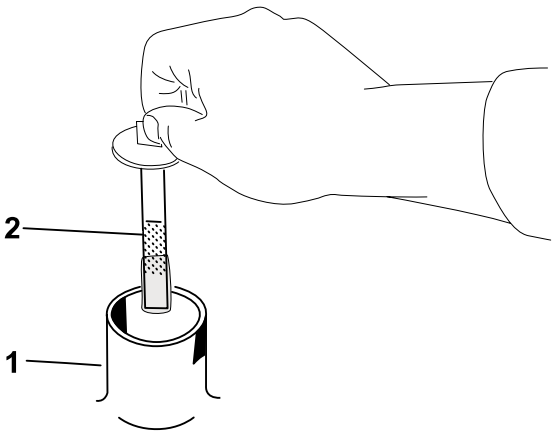

g023716S

Changing the Hydraulic Fluid

1. Remove the upper left panel of the console (1).
2. Remove the hydraulic tank cap (2) and use a pump to empty the hydraulic tank.

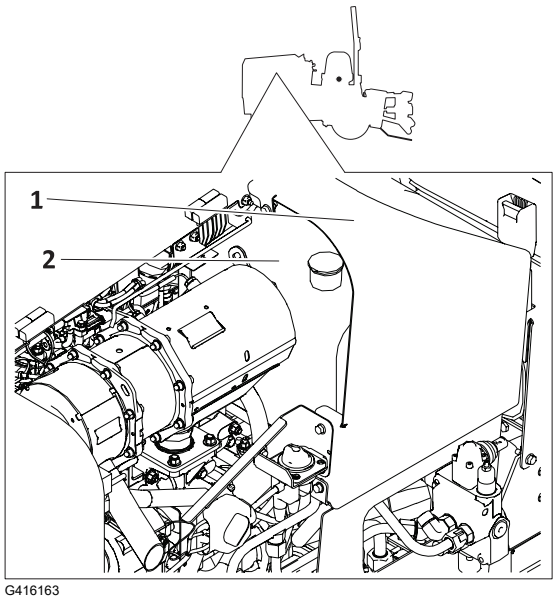

G416163

3. Remove the lower right side cover plate and loosen the hose clamp holding the suction hose to the hydraulic tank (4).
4. Remove the left side cover plate and loosen the 3 hose clamps under the hydraulic tank (1) (2) (3).
5. Disconnect the electrical lead to the fluid temperature sensor at the bottom of the reservoir (5).

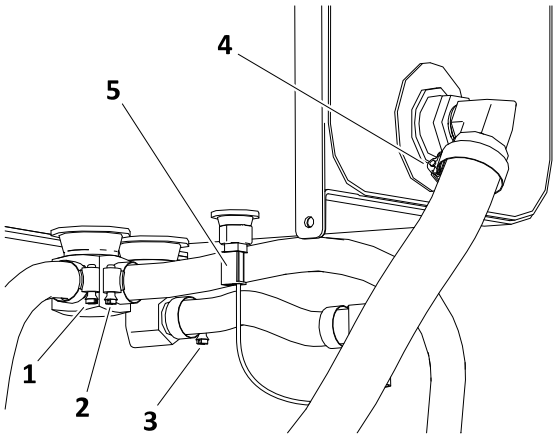

G416161

Changing the Hydraulic Fluid (continued)

6. Remove the bolts securing the tank straps.
7. Remove the hydraulic tank.
8. Flush the reservoir with cleaning solvent.
9. Remove the elbow adapters and clean the filter screens with compressed air.

   Note: Make a note of the orientation of the adapters.
10. Apply thread sealant to the threads of the suction screen and install the screen, elbow, hose, and clamp.
11. Connect the electrical lead to the fluid temperature sensor.

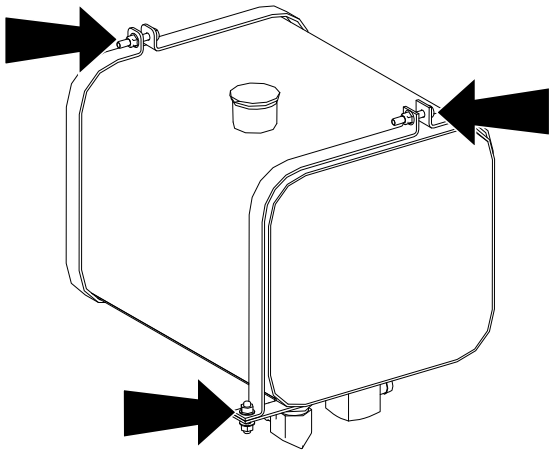

G416162

12. Connect the hose to the tank and secure with the clamps.
13. Install the hydraulic tank assembly.
14. Fill the tank.
15. Install the dipstick cap.
16. Start the engine and allow it to run for a few minutes.
17. Shut off the engine.
18. Check the hydraulic fluid level.
19. Add fluid as needed to keep the level at the line on the dipstick.

Changing the Hydraulic Filter

1. Lower any attachments, engage the parking brake, shut off the engine, and remove the key.
2. Turn the filter counterclockwise, remove and discard it.
3. Apply a thin coat hydraulic fluid to the rubber gasket on the replacement filter.
4. Fill the filter with clean fluid.
5. Install the replacement filter. Tighten it clockwise until the filter contacts the filter head, then tighten the filter an additional 3/4 turn.
6. Start the engine and let it run for about 2 minutes.
7. Shut off the engine and check for leaks.

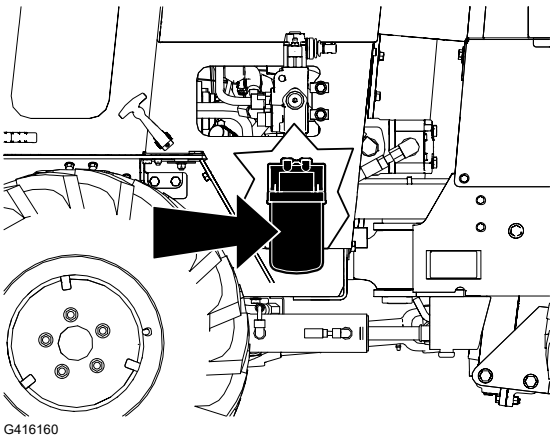

G416160

Checking the Hydraulic Lines

Check the hydraulic lines for leaks, loose fittings, kinked lines, loose mounting supports, wear, and deterioration. Make necessary repairs before operating.

Plow Maintenance

Plow Vibrator Oil Specifications

Note: Specifications and design are subject to change without notice.

Crankcase capacity	0.237 L (8 oz)
Oil Type	15W40

Checking the Plow Vibrator Oil

⚠ CAUTION ⚠

Contact with hot parts can cause burns. Only touch the machine when it is cool or wear gloves.

1. With the vibrator horizontal, check the oil level at the sight glass (2)
2. Add fluid at the fill (1) as needed to keep the level at the halfway point on the sight glass.

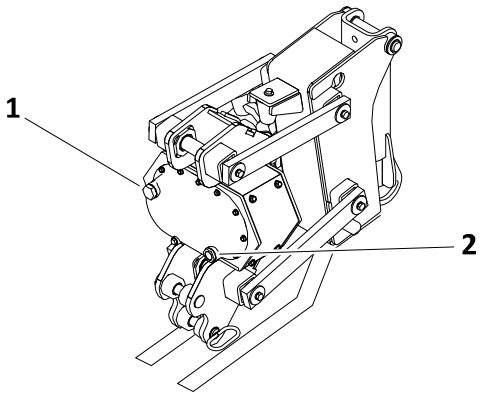

G418320

Changing the Plow Vibrator Oil

1. Remove the plug and drain the oil into a suitable container.
2. Install the plug and add fluid at the fill (1) until the level is at the halfway point on the sight glass.

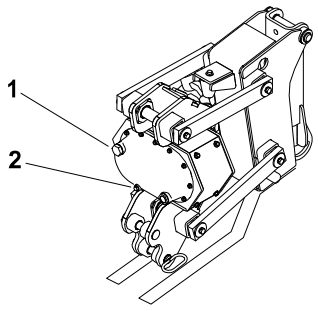

G490130

Checking the Plow Blade

Check the plow blade for wear. Replace it as needed.

Changing the Plow Blade

IMPORTANT

The plow blades are heavy; use 2 people to complete this procedure.

1. Shut off the engine.

   Note: Ensure that the vibratory plow is raised high enough for the blade to be changed.
2. Flip the 2 circular snap rings (1) over and remove the snap-ring pin.
3. Pull the 2 pins (2) out of the blade.
4. Place the new blade into the plow blade assembly and secure it with 2 pins and 2 snap-ring pins.

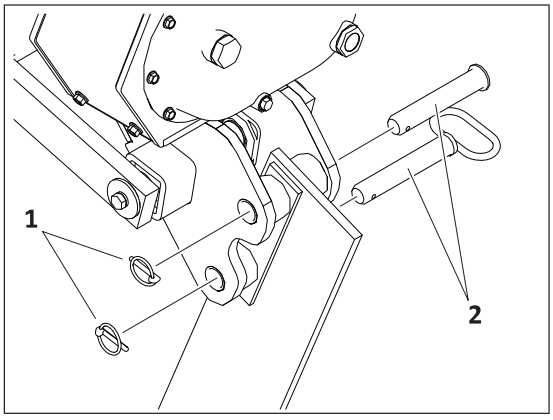

G418318

Changing the Plow Skid Shoes

1. Raise the plow about 91 cm (36 inches) off the ground.
2. Shut off the engine and remove the key.

Changing the Plow Skid Shoes (continued)

3. Remove the bolts securing the skid shoes to the plow.
4. Install the new skid shoes and secure them with the previously removed hardware.

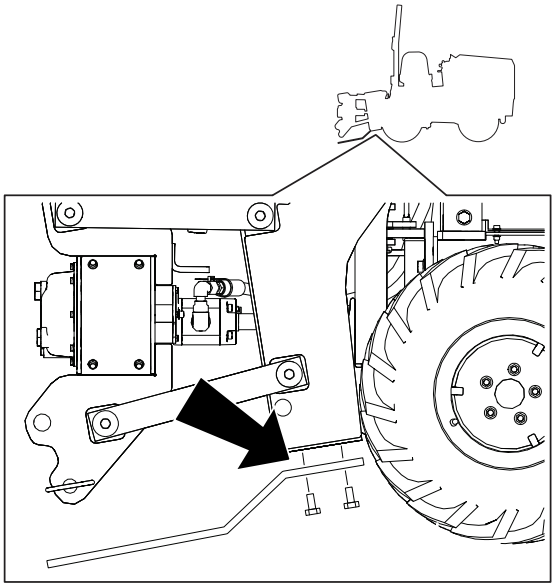

G418319

Checking the Plow Mounting Bolts

Check the bolts every 10 hours. Tighten as needed.

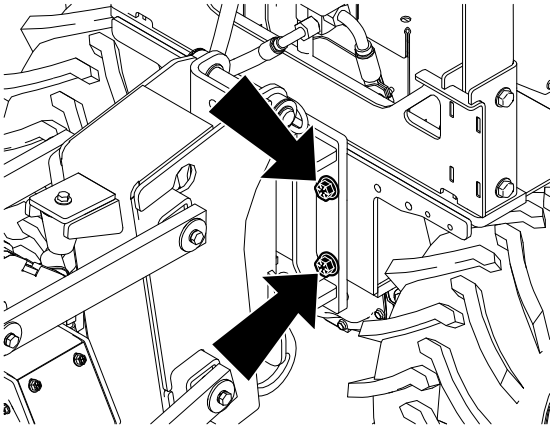

G433378

Trencher Maintenance

Checking Chain Components

1. If a rock chain bit is in use, check that the bits rotate freely.
2. Clean the chain and check the bits after each use.
3. Replace the bit when the carbide cap or insert is worn.

Checking Chain Components (continued)

4. If the sidebars (2) are bent or loose on the chain pins, chain spacers should be used to join the sidebars.
5. Check the pins and bushings for wear by measuring the distance between the chain pins (3) and comparing it with the new chain.
6. Check the teeth (1) for wear.

   Note: Replace worn teeth using Toro replacement parts and maintaining the original tooth pattern.

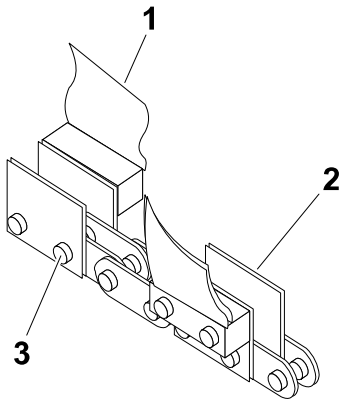

G434863

Adjusting the Digging Chain Tension

Check every 10 hours. Adjust as needed.

1. Move the boom into a horizontal position and stop the engine.
2. Set the parking brake.
3. Ensure the distance from the bottom of the boom to the chain (A) measures 38–51 mm (1.5–2 inches).

Note: Do not overtighten the chain. Overtightening will cause chain stretch, loss of machine performance, and possible premature chain failure.

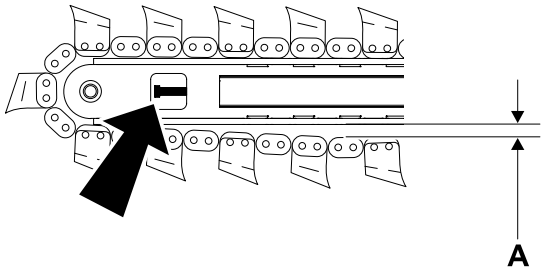

G434862

4. To adjust the tension, loosen the jam nut on the adjustment screw.
5. To tighten the digging chain, turn the adjustment screw clockwise. To loosen it, turn the screw counterclockwise.
6. When the chain is properly tensioned, tighten the jam nut.

Removing the Chain

IMPORTANT

Replace the sprockets when a new chain is installed.

1. Fasten and adjust the seat belt.
2. Start the engine.
3. Turn the digging chain until the connector pin is on top of the boom.
4. Lower the boom to the ground.

Removing the Chain (continued)

5. Engage the parking brake.
6. Shut off the machine.
7. Secure the chain by clamping the links on either side of the connector pin with chain jaws as shown. Squeeze the jaws to reduce pressure on the pin.
8. Relieve chain tension.
9. Stand clear of the chain and remove the lock key from the connector pin.
10. Drive the connector pin out of the link.
11. Unclamp the links. Slowly release the cable and lower the chain to the ground.

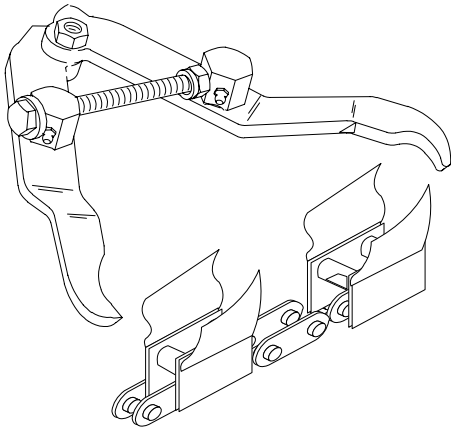

G434865

⚠ WARNING ⚠

Raised component. Crushing can cause death or serious injury. Stay away. Use correct equipment and procedures.

12. Lay the chain on the ground with the teeth down.

Checking the Trencher Mounting Bolts

Check the bolts every 10 hours. Tighten them as needed.

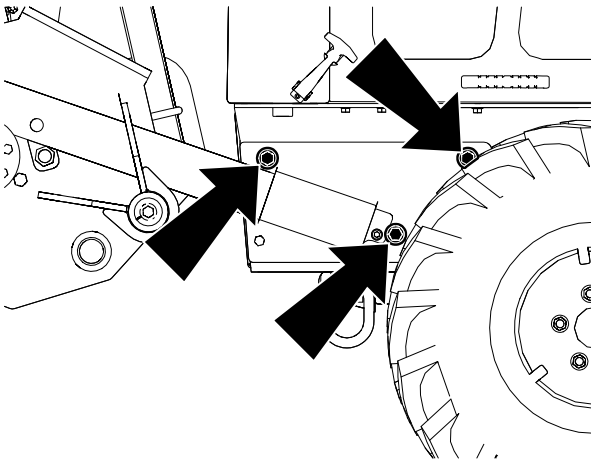

G433379

Checking the Trench Cleaner Position

[Graphic number is missing]

Checking the Trench Cleaner Position (continued)

Check the trench cleaner position (if equipped) every 10 hours or anytime the digging chain is adjusted or replaced.

Ensure there is 76–102 mm (3–4 inches) between the digging teeth and the inside of the trench cleaner shoe (A).

ROPS Maintenance

ROPS Notice

The protection offered by the Rollover Protective Structure (ROPS) will be impaired if it has been subjected to any modification, structural damage, or has been involved in an overturn accident. The ROPS must be replaced after a roll-over.

Do not try to weld or straighten a damaged ROPS bar.

Checking the Roll Bar

1. Check the 4 bolts for looseness or wear. Torque the bolts to **203–223 N•m (150–165 ft•lb)**.

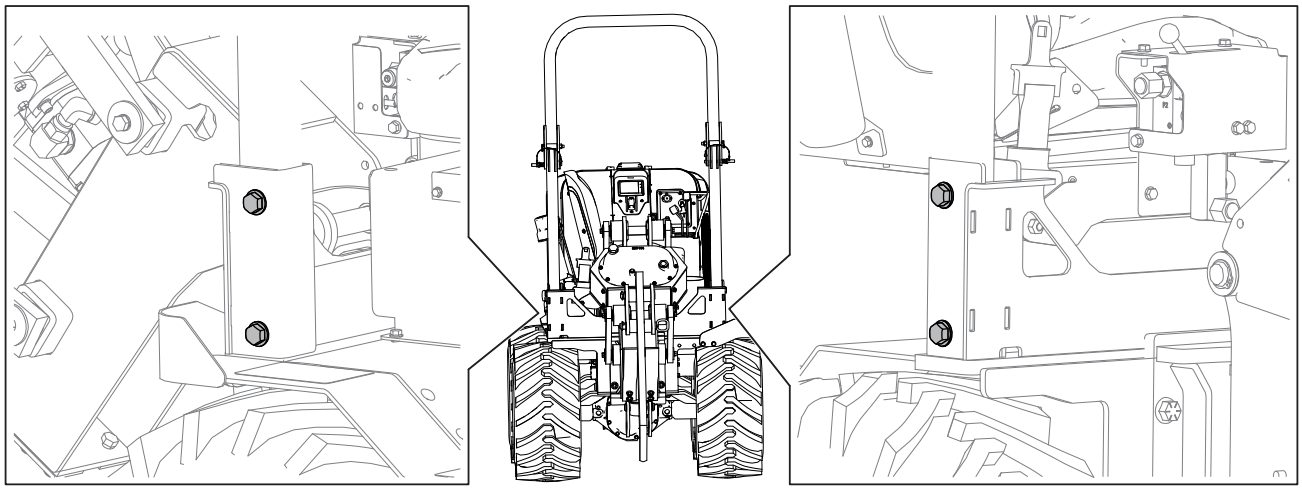

G428618

2. Inspect the roll bar for cracks, rust, or holes in the roll bar component parts.

   Note: Age, weather, and accidents cause damage to the roll bar and ROPS parts. If you have any doubts about the ROPS system, contact an Authorized Service Dealer.

Checking the Seat Belt

1. Check the seat belt ①② for damage and replace any damaged parts.

2. Ensure that the mounting bolts ③ for the seat belts are tight. Torque the bolts to **104–115 N•m (77–85 ft•lb)**.
3. Keep the seat belts clean using only soap and water.

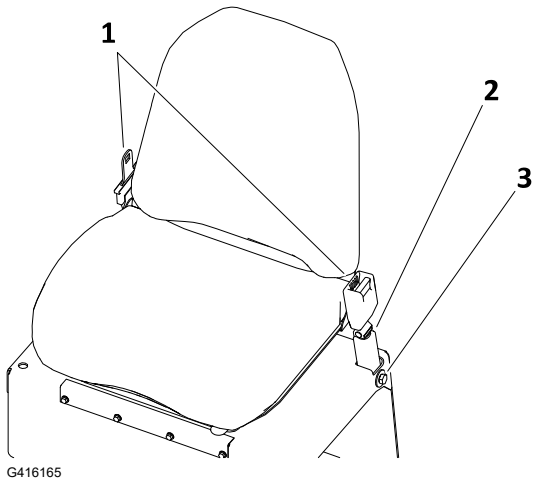

Cleaning

Removing Debris

1. Turn the battery disconnect to OFF.
2. Wipe away debris from the air cleaner.
3. Clean any debris buildup on the engine and in the transmission with a brush or blower.
4. Ensure that all mud and debris is rinsed from the tires before parking the machine overnight.

IMPORTANT

Do not spray water onto the operator console or the electrical center in the engine compartment. Water can damage electrical components. Wipe them down instead.

Keep pressurized water away from the ECU connections.

Storage Safety

- Shut off the engine, remove the key (if applicable), wait for all moving parts to stop, and allow the machine to cool before storing it.
- Do not store the machine or fuel near flames.

Preparing the Machine for Storage Over 30 Days

1. Clean the machine.
2. Grease the machine.
3. Before long term storage, wash the attachment with mild detergent and water to remove dirt and grime.
4. Check the condition of the hydraulic hoses. Replace any damaged hoses.
5. Ensure that all hydraulic couplers are connected together to prevent contamination of the hydraulic system.
6. Prepare the engine.
   A. Service the air cleaner.
   B. Change the engine oil.
7. Check and tighten all fasteners. Repair or replace any worn, damaged, or missing parts.
8. Paint all scratched or bare metal surfaces with paint available from your Authorized Service Dealer.
9. Store the machine in a clean, dry garage or storage area. Remove the key from the ignition switch and keep it in a memorable place.
10. Cover the machine to protect it and keep it clean.

Decommission the Machine

Before decommissioning the machine, follow local regulations for disposing of hazardous substances. For more information on draining fluids, see the Maintenance chapter or contact your Authorized Service Dealer.

California Proposition 65 Warning Information

What is this warning?

You may see a product for sale that has a warning label like the following:

 **WARNING:** Cancer and Reproductive Harm—www.p65Warnings.ca.gov.

What is Prop 65?

Prop 65 applies to any company operating in California, selling products in California, or manufacturing products that may be sold in or brought into California. It mandates that the Governor of California maintain and publish a list of chemicals known to cause cancer, birth defects, and/or other reproductive harm. The list, which is updated annually, includes hundreds of chemicals found in many everyday items. The purpose of Prop 65 is to inform the public about exposure to these chemicals.

Prop 65 does not ban the sale of products containing these chemicals but instead requires warnings on any product, product packaging, or literature with the product. Moreover, a Prop 65 warning does not mean that a product is in violation of any product safety standards or requirements. In fact, the California government has clarified that a Prop 65 warning “is not the same as a regulatory decision that a product is ‘safe’ or ‘unsafe.’” Many of these chemicals have been used in everyday products for years without documented harm. For more information, go to https://oag.ca.gov/prop65/faqs-view-all.

A Prop 65 warning means that a company has either (1) evaluated the exposure and has concluded that it exceeds the “no significant risk level”; or (2) has chosen to provide a warning based on its understanding about the presence of a listed chemical without attempting to evaluate the exposure.

Does this law apply everywhere?

Prop 65 warnings are required under California law only. These warnings are seen throughout California in a wide range of settings, including but not limited to restaurants, grocery stores, hotels, schools, and hospitals, and on a wide variety of products. Additionally, some online and mail order retailers provide Prop 65 warnings on their websites or in catalogs.

How do the California warnings compare to federal limits?

Prop 65 standards are often more stringent than federal and international standards. There are various substances that require a Prop 65 warning at levels that are far lower than federal action limits. For example, the Prop 65 standard for warnings for lead is 0.5 µg/day, which is well below the federal and international standards.

Why don’t all similar products carry the warning?

- Products sold in California require Prop 65 labelling while similar products sold elsewhere do not.
- A company involved in a Prop 65 lawsuit reaching a settlement may be required to use Prop 65 warnings for its products, but other companies making similar products may have no such requirement.
- The enforcement of Prop 65 is inconsistent.
- Companies may elect not to provide warnings because they conclude that they are not required to do so under Prop 65; a lack of warnings for a product does not mean that the product is free of listed chemicals at similar levels.

Why does Toro include this warning?

Toro has chosen to provide consumers with as much information as possible so that they can make informed decisions about the products they buy and use. Toro provides warnings in certain cases based on its knowledge of the presence of one or more listed chemicals without evaluating the level of exposure, as not all the listed chemicals provide exposure limit requirements. While the exposure from Toro products may be negligible or well within the “no significant risk” range, out of an abundance of caution, Toro has elected to provide the Prop 65 warnings. Moreover, if Toro does not provide these warnings, it could be sued by the State of California or by private parties seeking to enforce Prop 65 and subject to substantial penalties.

Notes:


TORO®