1985 INTERNATIONAL FORM NO. 3312-538

TORO®

MODEL NO. 20705-5000001 & UP

PARTS CATALOG

21" S.P. REAR BAGGER

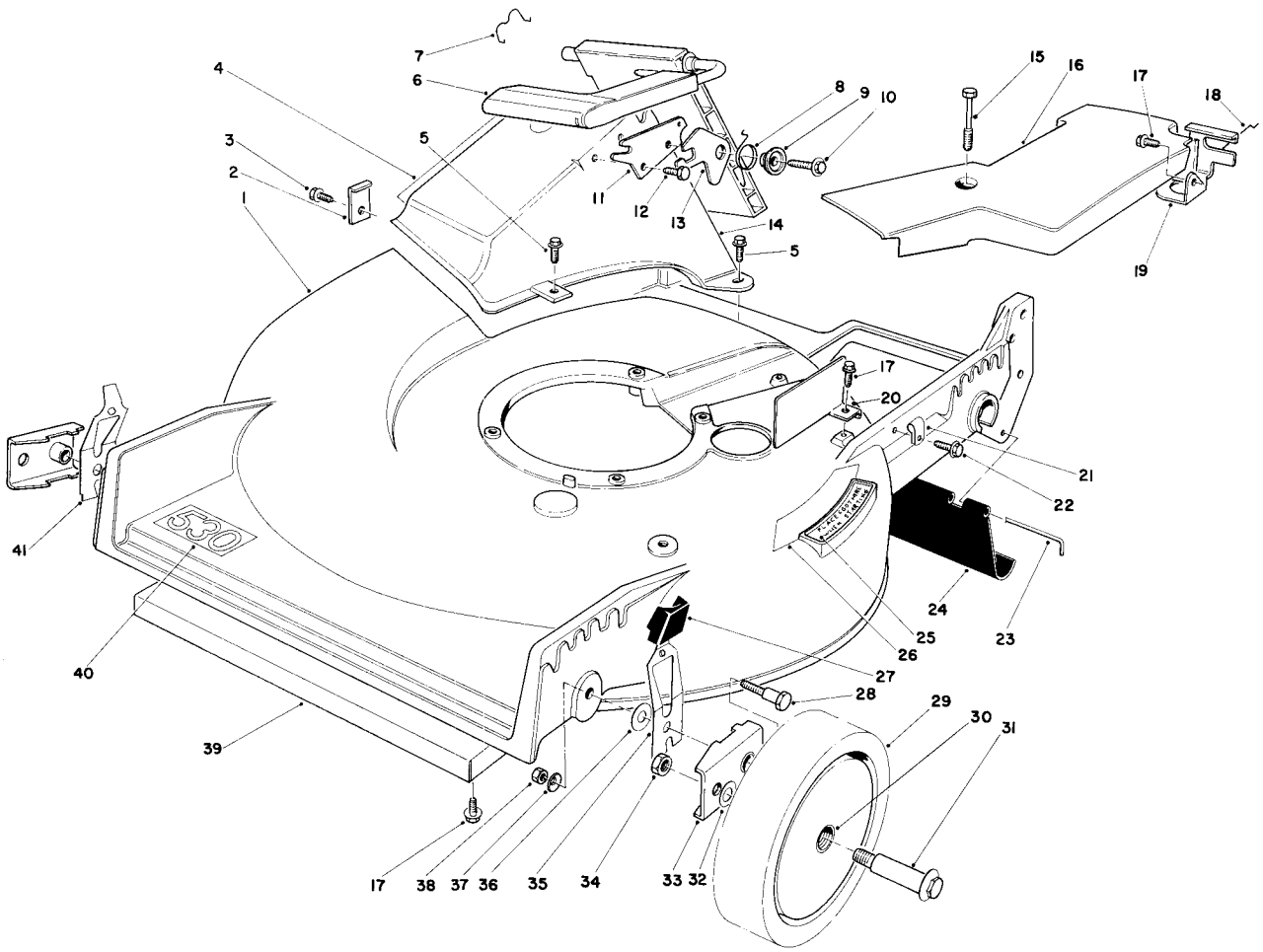

HOUSING ASSEMBLY

Ref. No.	Part No.	Description	No. Used
1	11-4089	21" Housing	1
2	47-6540	Clip – Tunnel	1
3	12-3270	Screw	1
4	46-9350	Decal – Attention	1
5	46-6811	Screw & Washer	3
6	51-0200	Discharge Door Assembly	1
7	47-5840	Retainer – Door	1
8	33-4860	Spring – Torsion	1
9	43-4840	Spacer – Latch	1
10	46-8091	Screw – Self Tapping	1
11	23-1040	Plate – Latch	1
12	46-8090	Screw – Self Tapping	1
13	42-4010	Latch – Safety	1
14	46-3500	Tunnel – Discharge	1
15	37-7260	Capscrew – Special	2

Ref. No.	Part No.	Description	No. Used
16	52-7390	Cover – Belt	1
17	32144-11	Screw – Thread Forming	6
18	46-7030	Retainer – Cable	1
19	46-5870	Bracket – Traction Adjust	1
20	49-8450	Shield – Muffler	1
21	2412-83	Clamp	1
22	12-5450	Screw – Tapping	1
23	33-3208	Rod – Shield	1
24	44-0580	Shield – Trailing	1
25	46-7370	Decal – Step Pad	1
26	46-9330	Decal – Step Pad (French/German)	1
27	25-7740	Knob – Arm	2
28	44-5270	Screw – Pivot	2
29	52-7530	Wheel & Tire Assy. (Inc. Ref. #30)	2

©The Toro Company — 1984

PRICE $1.00

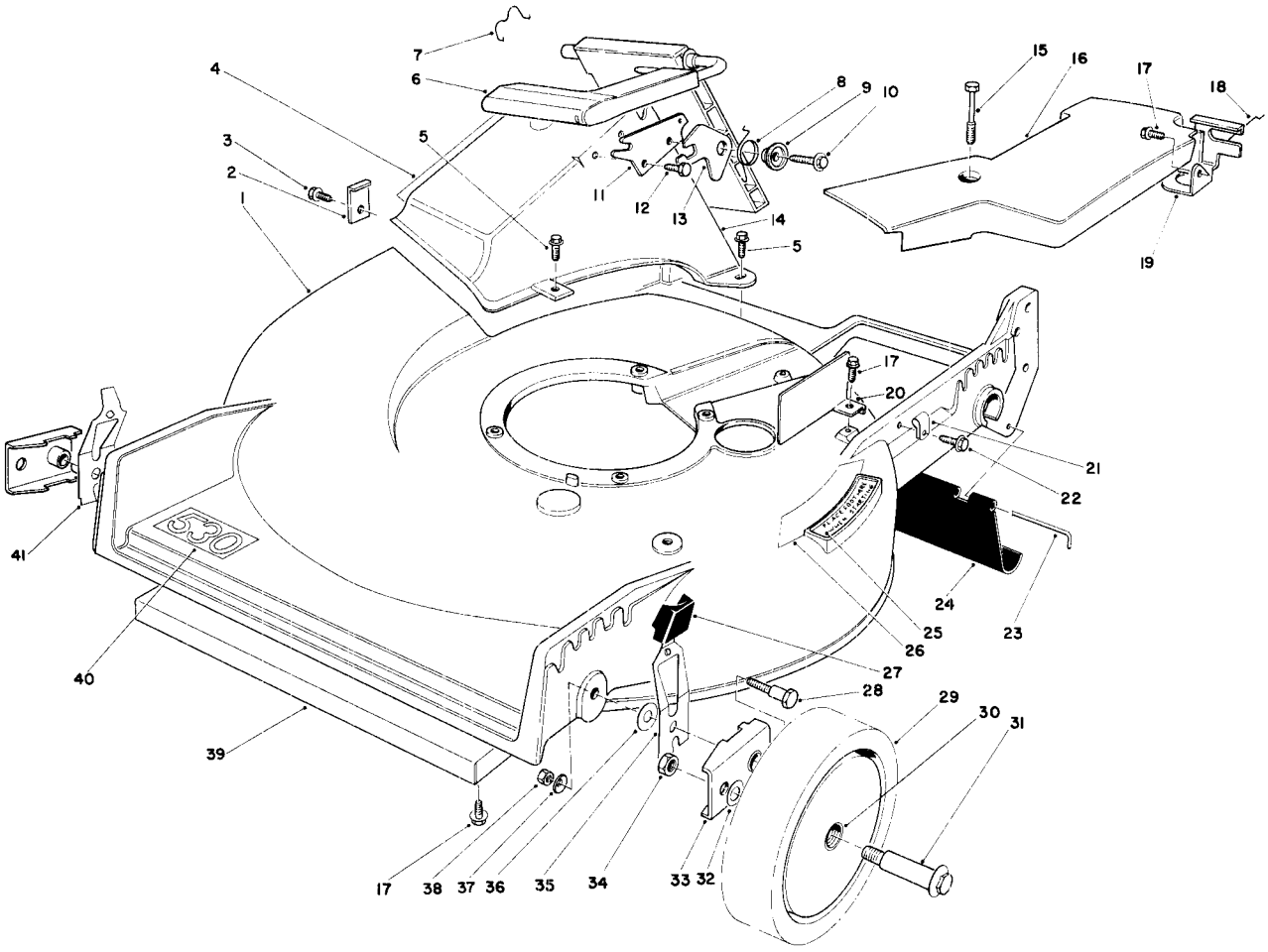

HOUSING ASSEMBLY (Continued)

Ref. No.	Part No.	Description	No. Used
30	27-6250	Bushing	2
31	27-6231	Bolt – Wheel	2
32	40-1940	Washer – Wheel Bolt	2
33	47-2940	Pivot Arm Assembly	2
34	3296-6	Locknut	2
35	52-7480	Spring Arm Assembly	1

Ref. No.	Part No.	Description	No. Used
36	5-4460	Washer – Pivot	2
37	3290-456	Washer – Belleville	2
38	3296-29	Locknut	2
39	46-5400	Shield – Front 21"	1
40	46-9410	Decal – 530	1
41	52-7490	Spring Arm Assembly	1

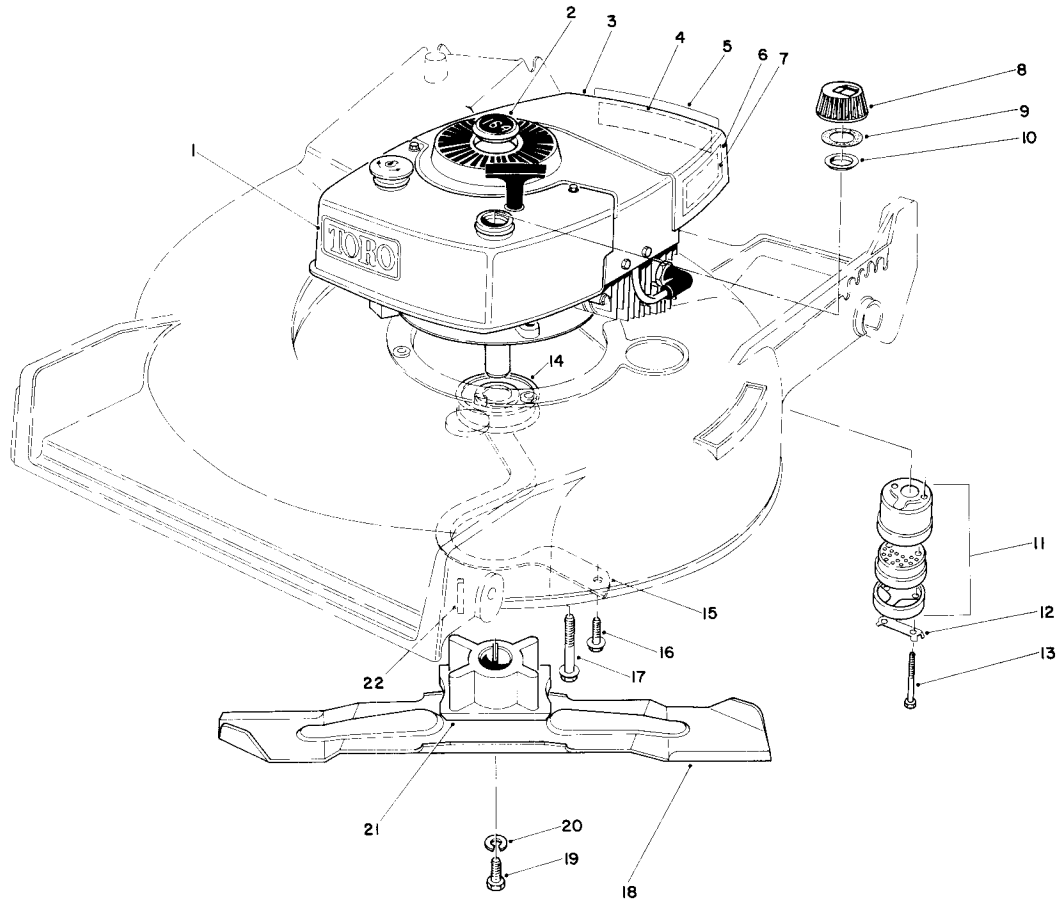

ENGINE ASSEMBLY

Ref. No.	Part No.	Description	No. Used
1	44-0510	Decal – Toro	1
2	38-1481	Plug Button	1
3	221-742	Engine Variation	1
4	40-2950	Decal – Maintenance (French & English)	1
5	46-9310	Decal – Primer Bulb	1
6	40-2440	Decal – Maintenance (German)	1
7	46-9000	Decal – Maintenance (German) – inside cover –	1
8	42-0682	Gas Cap (Incl. Ref. #9 & 10)	1
9	2210-144	Gasket	1
10	2210-143	Baffle	1
11	5-4769	Muffler Assembly (Incl. Ref. #12 & 13)	1
12	3-5094	Clip – Locking	1

Ref. No.	Part No.	Description	No. Used
13	321-20	Capscrew	2
14	23-0130	Pulley – Driver	1
15	40-5720	Guide – Belt	1
16	11-9760	Screw – Thread Forming	2
17	11-0581	Screw – Thread Forming	3
18	42-1000	Blade – 21"	1
19	26-0670	Screw – Blade	1
20	3253-22	Lockwasher	1
21	46-3490	Retainer – Blade	1
22	7-0036	Key – Square	1
*	46-1930	Blade Bolt Wrench	1
*	46-9620	Spark Plug Wrench	1
*	39-5930	Spark Arrester Muffler (Optional) (Incl. Ref. #12 & 13)	1

*Not Illustrated

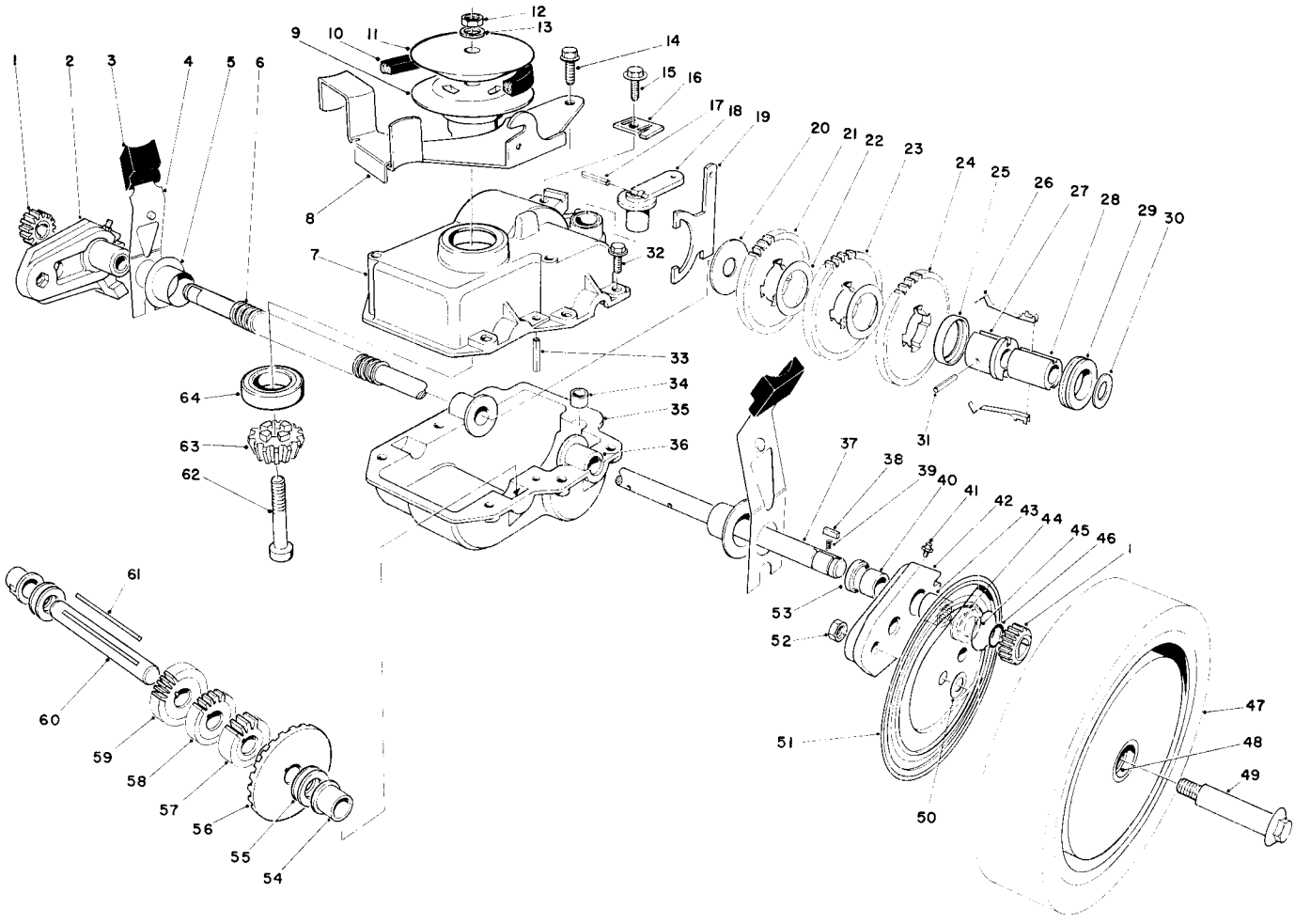

GEAR CASE ASSEMBLY

Ref. No.	Part No.	Description	No. Used
1	39-9160	Pinion	2
2	49-7720	Pivot Arm Assembly – R.H. (Incl. Ref. #40, 41, 43 & 53)	1
3	25-7740	Knob – Arm	2
4	44-1010	Spring Arm Assembly	2
5	42-3520	End Cap	2
6	24-7922	Cover – Drive Shaft	1
7	49-8370	Case – Upper	1
8	49-8460	Bracket – Belt Guide	1
9	49-8330	Pulley – Lower	1
10	36-8070	V-Belt	1
11	49-8340	Pulley – Upper	1
12	3296-29	Locknut	1
13	3256-2	Washer	1
14	12-3270	Screw – Special	2
15	32144-11	Screw – Thread Forming	1
16	46-5610	Clamp – Cable	1
17	32121-99	Pin – Coil	1
18	29-9560	Lever – Shift	1
19	29-9520	Yoke – Shift	1
20	29-9690	Washer	1
21	42-4740	Gear – 38T	1
22	36-4770	Spacer – Gear	2

Ref. No.	Part No.	Description	No. Used
23	29-9271	Gear – 42T	1
24	46-3560	Gear – 52T	1
25	39-7830	Retainer – Key	1
26	29-9330	Key – Shift	2
27	39-6730	Body – Sleeve	1
28	39-6720	Sleeve	1
29	29-9340	Collar – Shift	1
30	36-4780	Washer	1
31	32121-106	Pin – Coil	1
32	49-2040	Screw – Self Tapping	6
33	32121-100	Pin – Coil	1
34	29-9570	Bushing – Yoke	1
35	29-9410	Case – Lower	1
36	47-5220	Bushing – Output Shaft	2
37	44-0850	Shaft – Output	1
38	39-9680	Key – Rectangular	2
39	39-9650	Spring	2
40	47-2890	Bushing	2
41	302-56	Grease Fitting	2
42	49-7710	Pivot Arm Assembly – L.H. (Incl. Ref. #40, 41, 43 & 53)	1
43	48-2060	Bearing – Roller	2
44	49-7690	Washer – Thrust, Inner	2

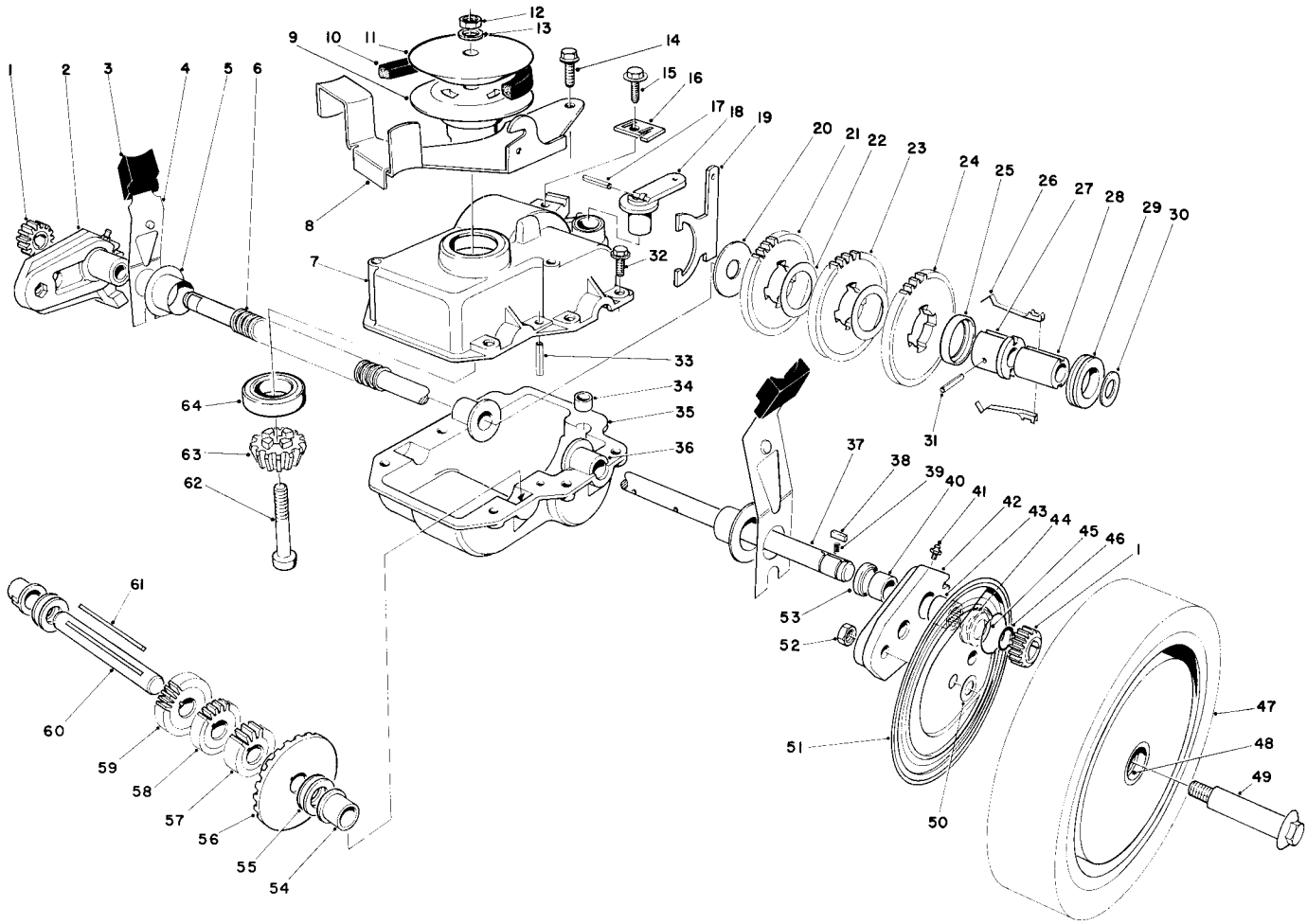

GEAR CASE ASSEMBLY (Continued)

Ref. No.	Part No.	Description	No. Used
45	49-7700	Washer – Thrust, Outer	2
46	32151-68	Retaining Ring	4
47	11-9519	Wheel, Tire & Gear Assembly (Incl. Ref. #48)	2
48	27-6250	Bushing – Wheel	4
49	27-6231	Bolt – Wheel	2
50	40-1940	Washer – Wheel Bolt	2
51	52-4860	Cover – Wheel	2
52	3296-6	Locknut	2
53	47-6730	Seal	2
54	52-5410	Bushing – Short Shaft	2

Ref. No.	Part No.	Description	No. Used
55	36-4791	Thrust Washer	4
56	39-6670	Gear – Bevel	1
57	46-3540	Gear – 12T	1
58	46-3550	Gear – 14T	1
59	39-6650	Gear – 18T	1
60	46-9470	Shaft – Intermediate	1
61	39-7841	Key – Square	1
62	3274-61	Screw – Socket Head	1
63	49-8350	Pinion – Bevel	1
64	38-7820	Bearing – Ball	1
*	49-8610	Gear Case Complete	1

*Not Illustrated

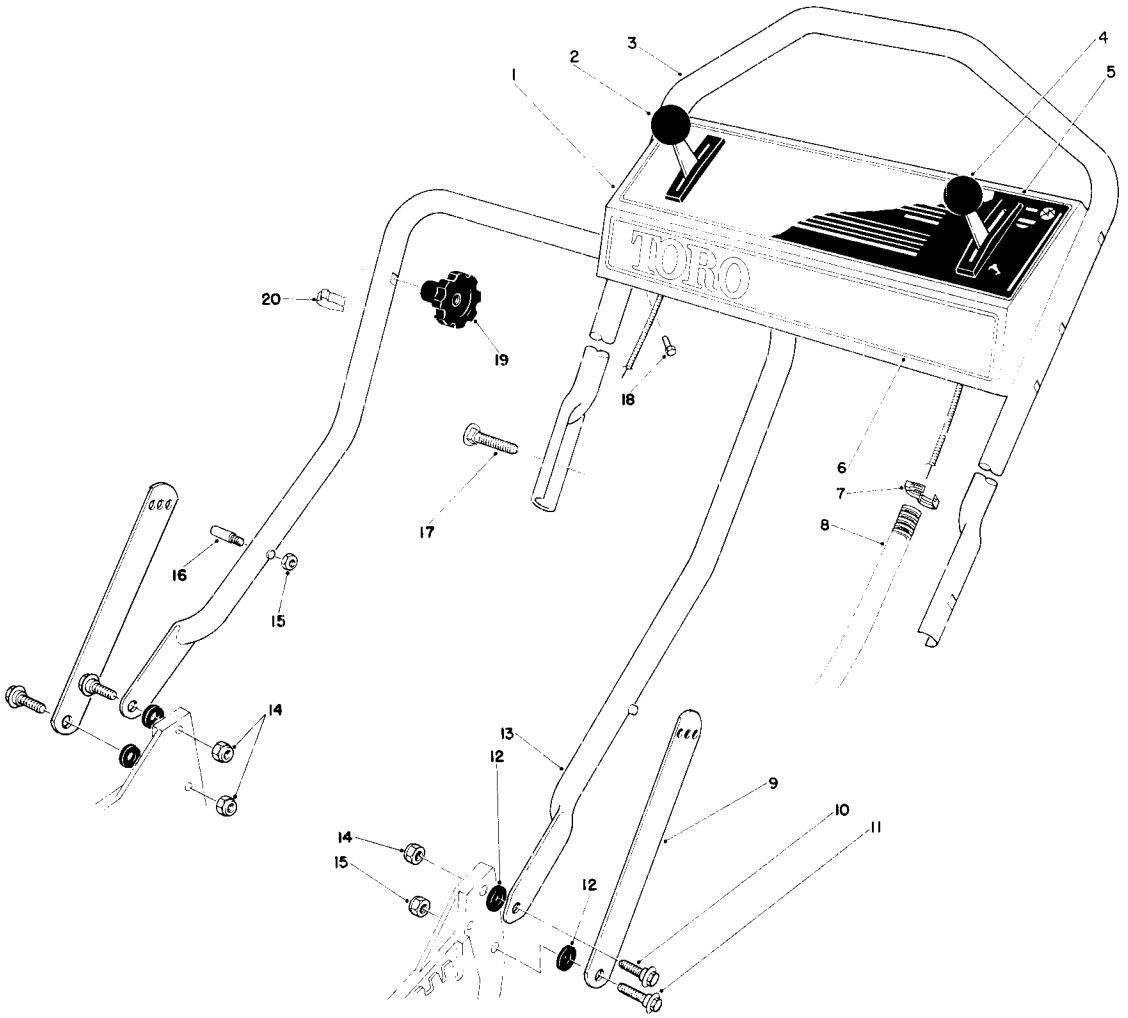

HANDLE ASSEMBLY

Ref. No.	Part No.	Description	No. Used
1	11-6519	Panel – Control (Incl. Ref. #5)	1
2	46-5430	Control – Ground Speed (Bend Type 1) (Sheath Lg. 42-1/4 inch, 107.3 cm) (Wire Lg. 2-1/4 inch, 5.7 cm)	1
3	46-5411	Handle – Upper	1
4	46-6010	Throttle Control (Bend Type 1) (Sheath Lg. 53-1/2 inch. 135.9 cm) (Wire Lg. 1-7/8 inch. 4.8 cm)	1
5	46-9250	Decal – Instruction Panel	1
6	46-7380	Decal – Toro Panel	1

Ref. No.	Part No.	Description	No. Used
7	2412-50	Clip – Cable Cover	4
8	46-6440	Cover – Control Cable	1
9	43-1370	Handle Latch	2
10	27-7211	Screw – Shoulder	2
11	27-7210	Screw – Shoulder	2
12	3-3287	Spacer – Handle Latch	4
13	43-1360	Lower Handle Assembly	1
14	3296-29	Locknut	3
15	3296-47	Locknut	3
16†	49-2750	Pin – Handle	2
17	17-9421	Handle Screw	2
18	32104-76	Screw – Tapping	5
19	19-4050	Knob – Handle Release	2
20	218-465	Clip – Cable	2

†Service Replacement Parts

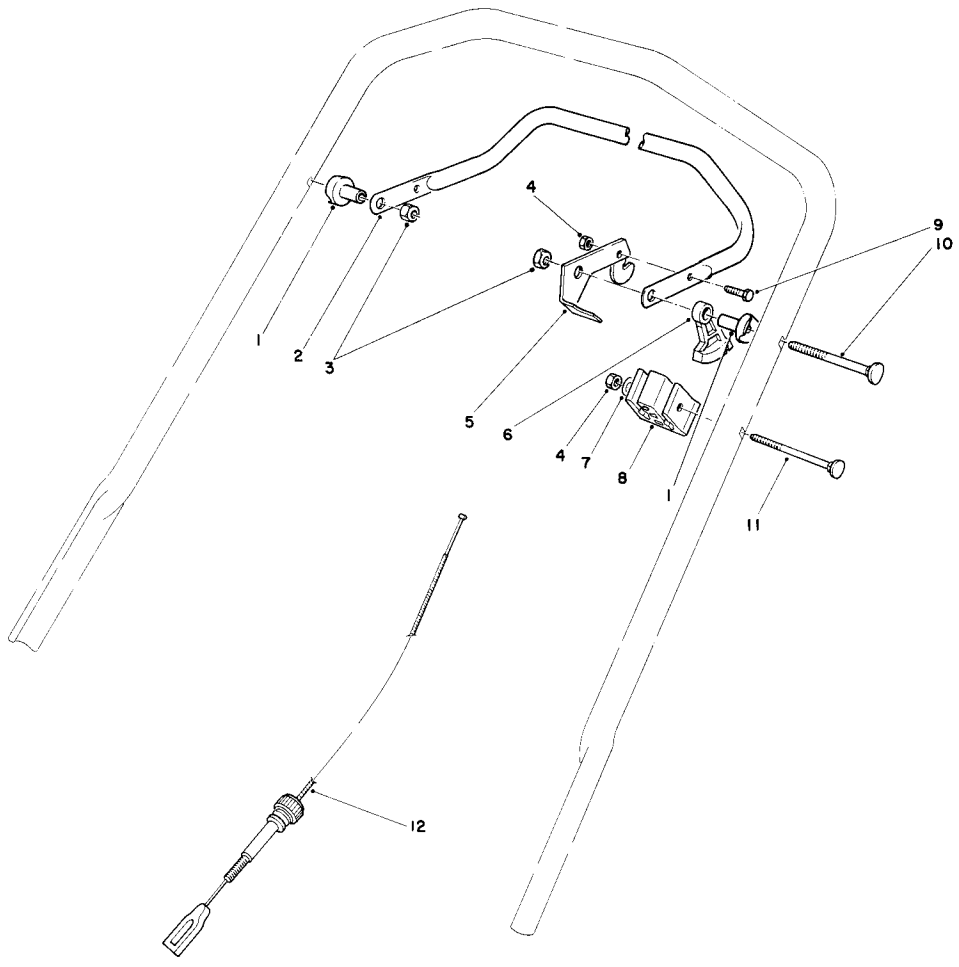

TRACTION CONTROL ASSEMBLY

Ref. No.	Part No.	Description	No. Used
1	49-1630	Spacer – Support	2
2	52-7430	Control Bar	1
3	3296-58	Locknut	2
4	3296-42	Locknut	2
5	46-8800	Lever – Control	1
6	46-5520	Lever – Traction	1

Ref. No.	Part No.	Description	No. Used
7	3256-22	Washer	1
8	46-6980	Support – Cable	1
9	321-3	Capscrew – Hex Hd.	1
10	17-9421	Screw – Handle	2
11	46-6434	Screw – Handle	1
12	46-5481	Cable – Traction	1

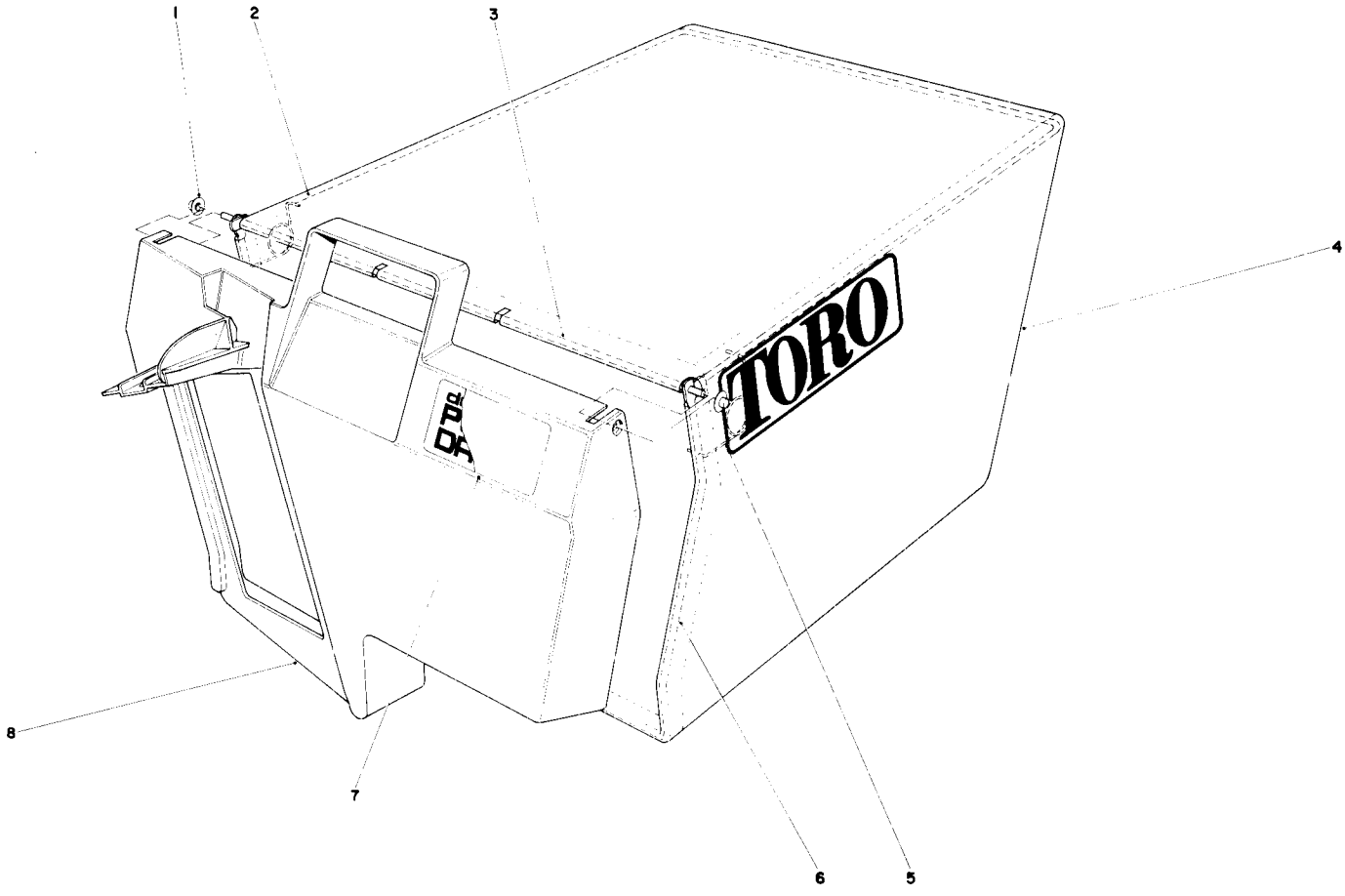

GRASS BAG ASSEMBLY NO. 11-0189

Ref. No.	Part No.	Description	No. Used
1	3290-422	Push Nut	2
2	42-4030	Bag Frame Upper	1
3	33-4820	Hinge Bag Door	1
4	8-2759	Grass Bag	1

Ref. No.	Part No.	Description	No. Used
5	36-6910	Spring	2
6	42-4020	Frame Bag	1
7	40-2240	Decal Bag Door	1
8	37-1392	Door Grass Bag	1

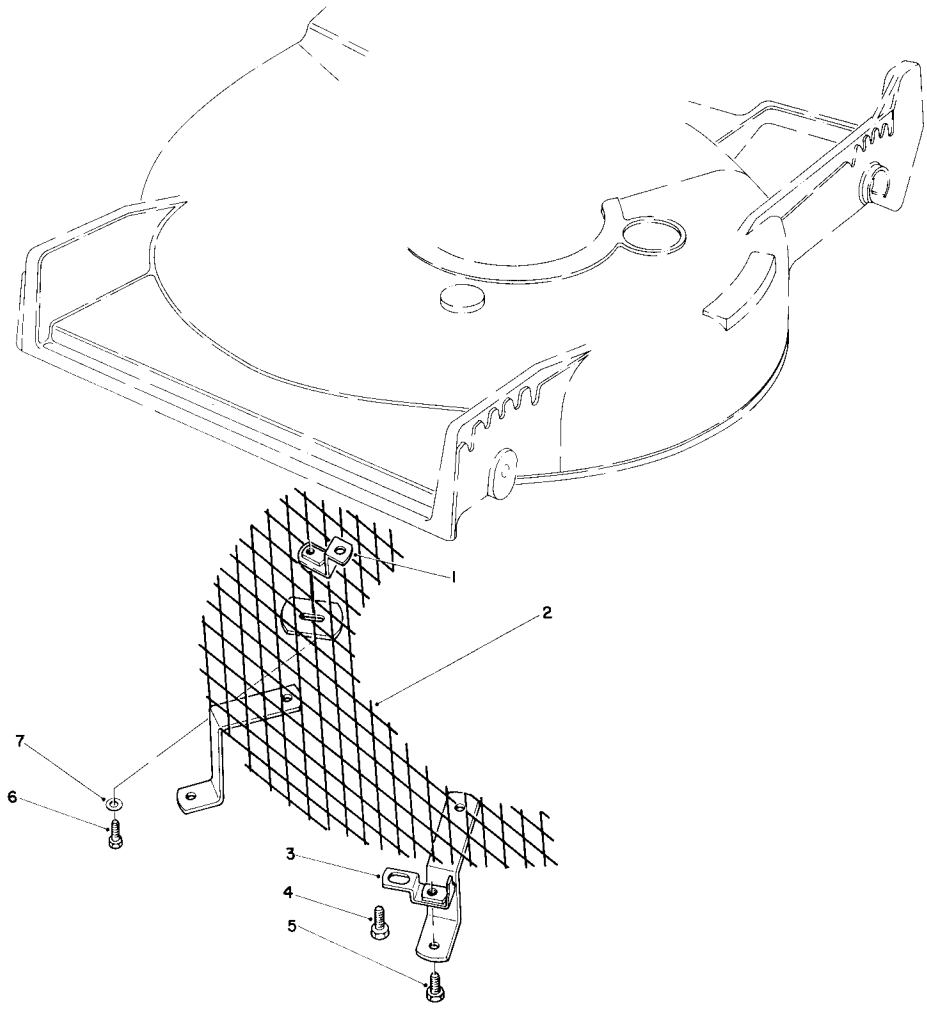

LEAF SHREDDER KIT MODEL NO. 59157 (Optional)

Ref. No.	Part No.	Description	No. Used
1	47-6260	Bracket	1
2	47-6230	Screen	1
3	46-4880	Mounting Bracket	2
4	32144-11	Screw – Self Tapping	2

Ref. No.	Part No.	Description	No. Used
5	321-3	Capscrew, Hex Hd.	2
6	321-5	Capscrew, Hex Hd.	1
7	3256-1	Washer	1

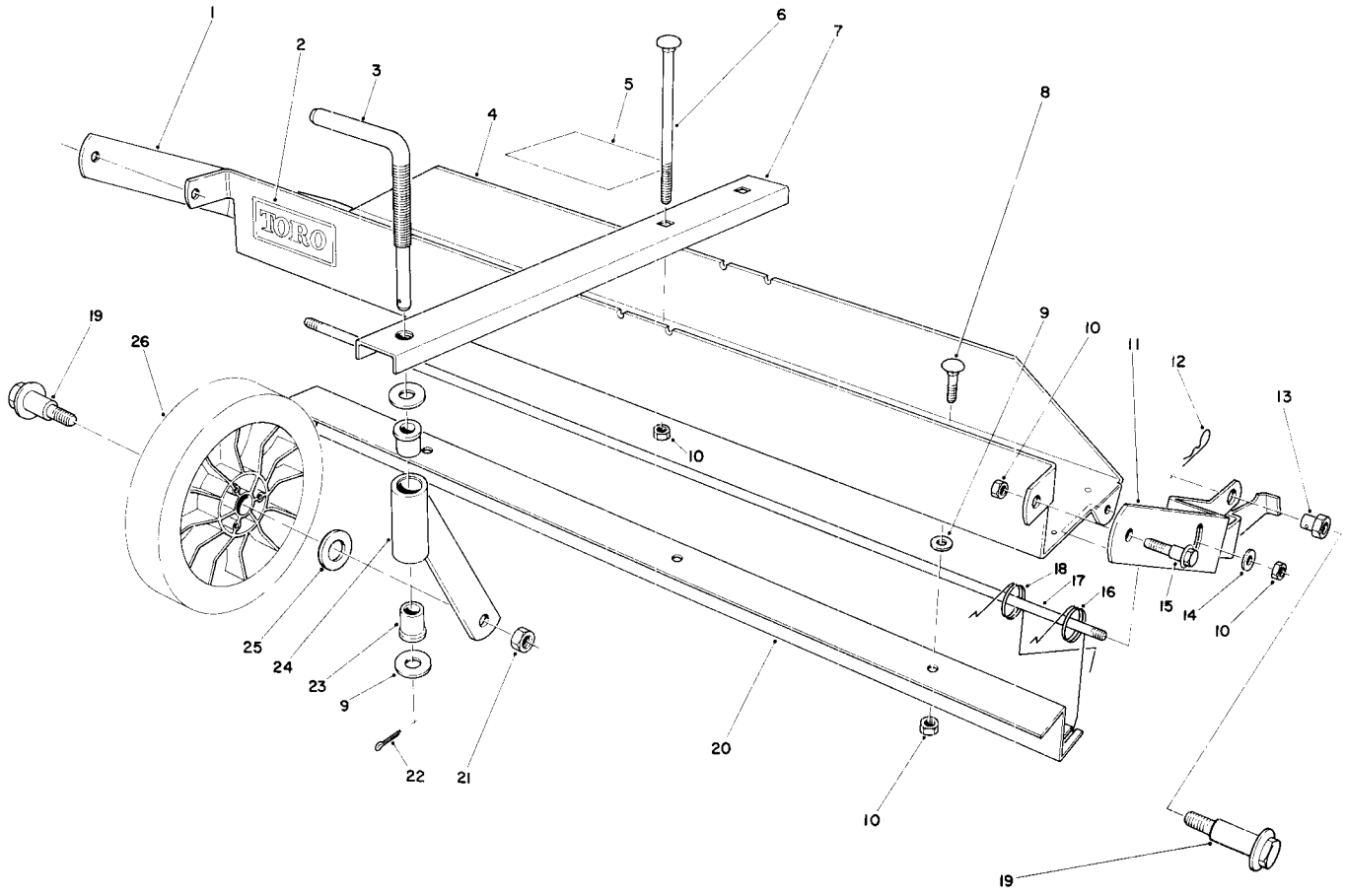

DETHATCHER KIT MODEL NO. 59126 (Optional)

Ref. No.	Part No.	Description	No. Used
1	47-6030	Frame Mount – R.H.	1
2	44-0810	Decal – Toro	1
3	47-6120	Rod – Castor Adjust.	1
4	47-2390	Frame – Main (Incl. Ref. #2)	1
5	47-7500	Decal – Instruction	1
6	3230-13	Carriage Bolt	2
7	47-6090	Castor Frame	1
8	3230-1	Carriage Bolt	3
9	3256-23	Washer	5
10	32153-3	Locknut	9
11	47-6020	Frame Mount – L.H.	1
12	3290-255	Hairpin Cotter	2
13	47-6130	Pivot Nut	2
14	3256-24	Washer – Plain	2

Ref. No.	Part No.	Description	No. Used
15	37-8771	Screw – Shoulder	2
16	47-6040	Spring – Dethatcher	6
17	47-6050	Rod – Spring Support	1
18	47-6041	Spring – Dethatcher	6
19	27-6230	Wheel Bolt	3
20	47-6010	Strap – Spring Guide	1
21	3296-6	Locknut	1
22	3272-10	Cotter Pin	1
23	47-6110	Bushing – Flange	2
24	47-6060	Castor Tube & Support	1
25	40-1940	Washer – Wheel	1
26	34-0380	Wheel Assembly	1
*	11-5239	Loose Parts	1

*Not Illustrated

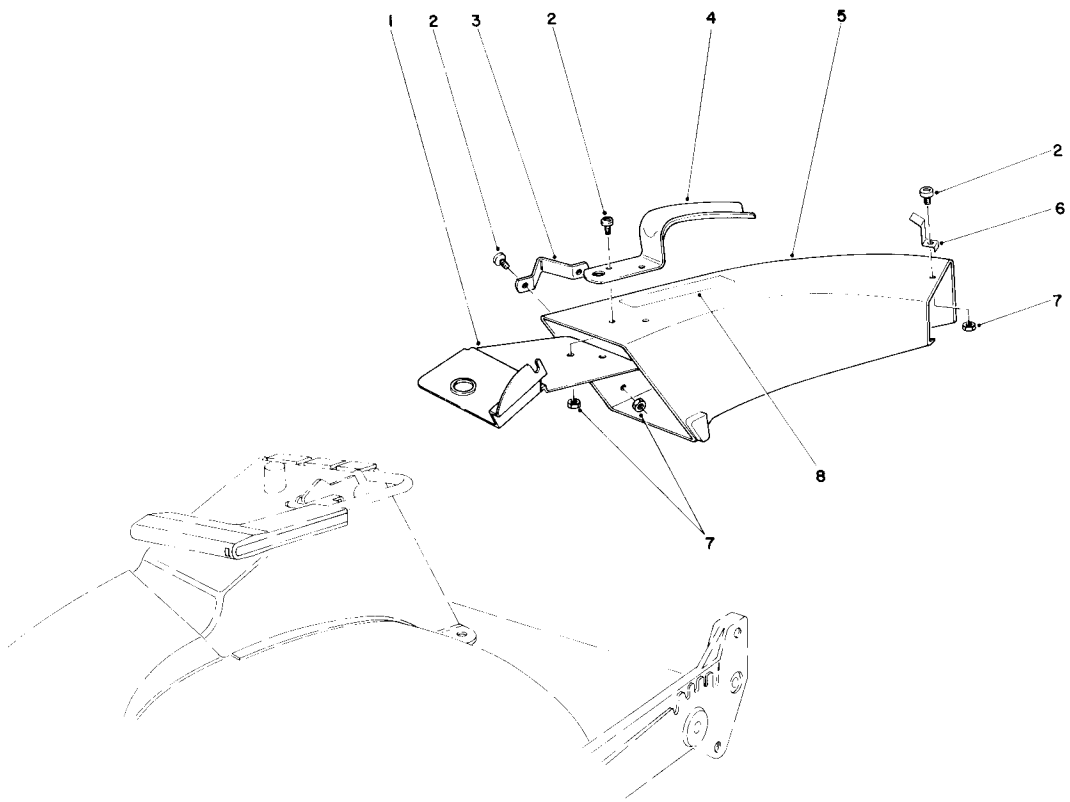

SIDE DISCHARGE CHUTE MODEL NO. 59108 (Optional)

Ref. No.	Part No.	Description	No. Used
1	44-2330	Plate – Discharge Chute	1
2	3251-3	Screw	5
3	46-6580	Bracket – Side	1
4	42-1340	Handle – Grass Chute	1

Ref. No.	Part No.	Description	No. Used
5	11-7149	Chute – Discharge (Incl. Ref. #8)	1
6	49-2630	Clip – Cable Stop	1
7	3296-12	Locknut	5
8	39-9120	Decal – Caution	1

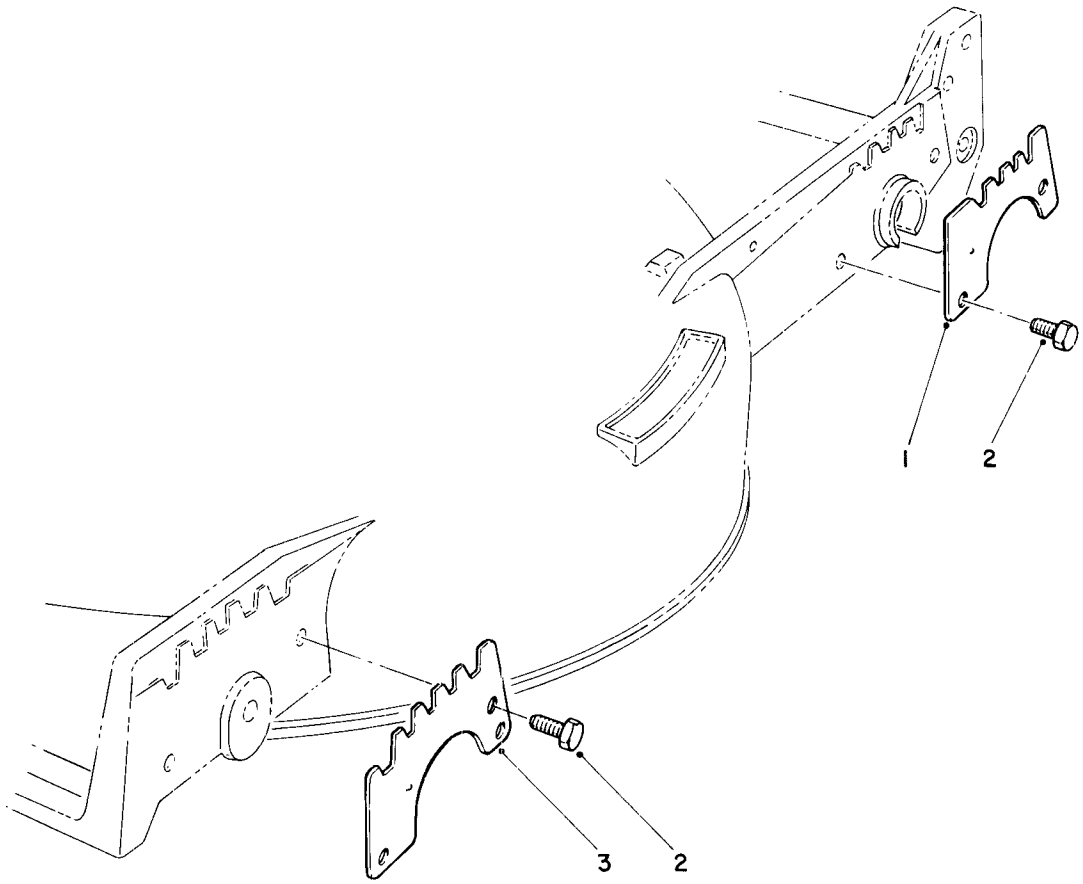

WEAR PLATE KIT NO. 49-4080 (Optional)

Ref. No.	Part No.	Description	No. Used
1	49-4070	Plate – Wear, Rear	2
2	32104-17	Screw – Thread Forming	8

Ref. No.	Part No.	Description	No. Used
3	43-5050	Plate – Wear, Front	2

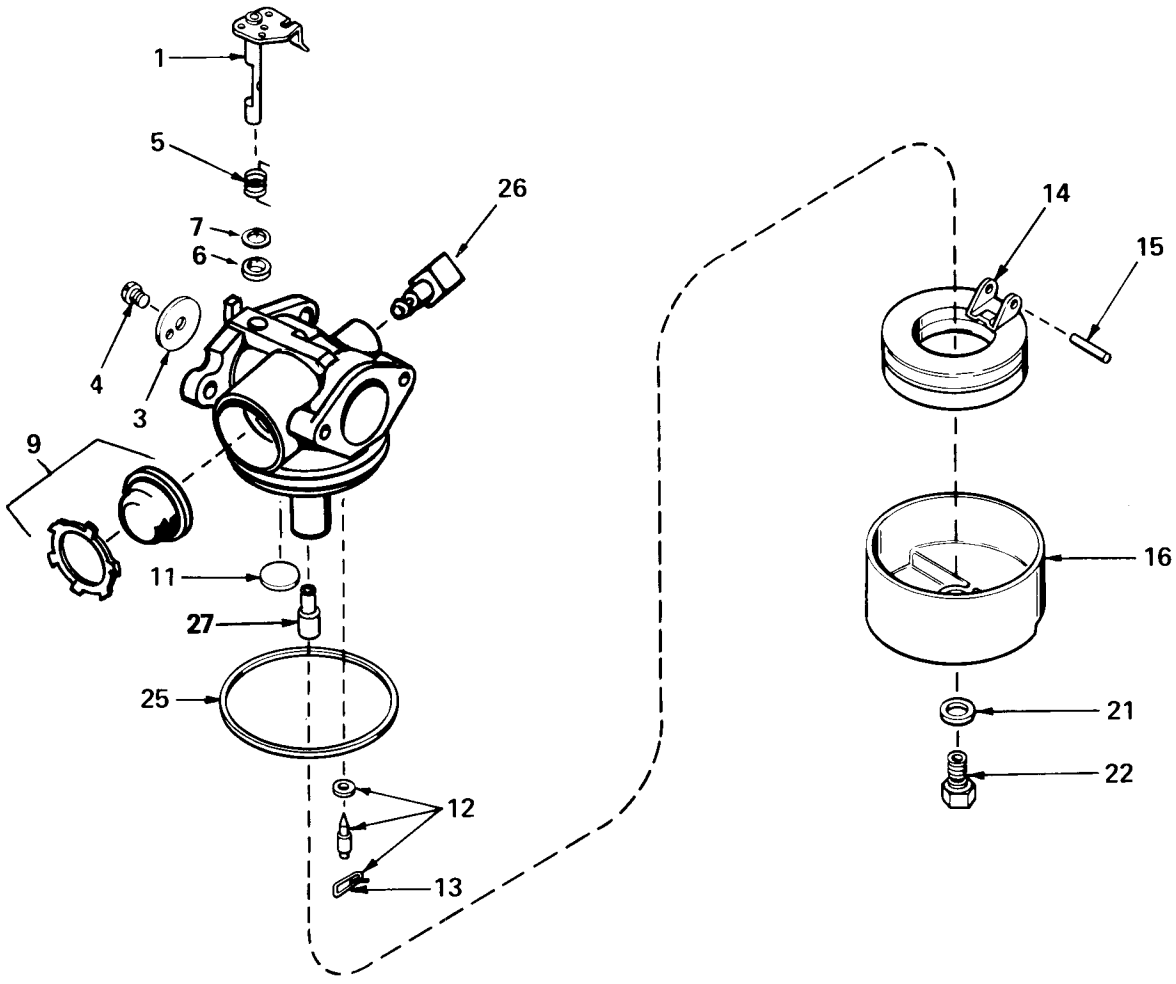

CARBURETOR NO. 632050A

Ref. No.	Part No.	Description	No. Used
1	631615	Shaft & Lever Assy., Throttle	1
3	631616	Shutter, Throttle	1
4	650506	Screw, Throttle Shutter	1
5	631767	Spring, Return	1
6	631971	Seal, Dust	1
7	631184	Washer, Flat	1
9	632047	Bulb & Retainer, Primer	1
11	631027	Plug, Welch	1
12	631021	Inlet Needle, Seat & Clip Assy. (Incl. Ref. #13)	1

Ref. No.	Part No.	Description	No. Used
13	631022	Clip, Inlet Needle	1
14	632019	Float, Carburetor	1
15	631024	Shaft, Float	1
16	631700	Bowl, Float	1
21	631334	Gasket, Bowl-to-Body	1
22	631935	Nut, Float Bowl	1
25	631028	Gasket, Bowl-to-Body	1
26	631807	Fitting, Fuel Inlet	1
27	632158	Spacer	1

ENGINE TECUMSEH MODEL NO. TNT 100-10086E

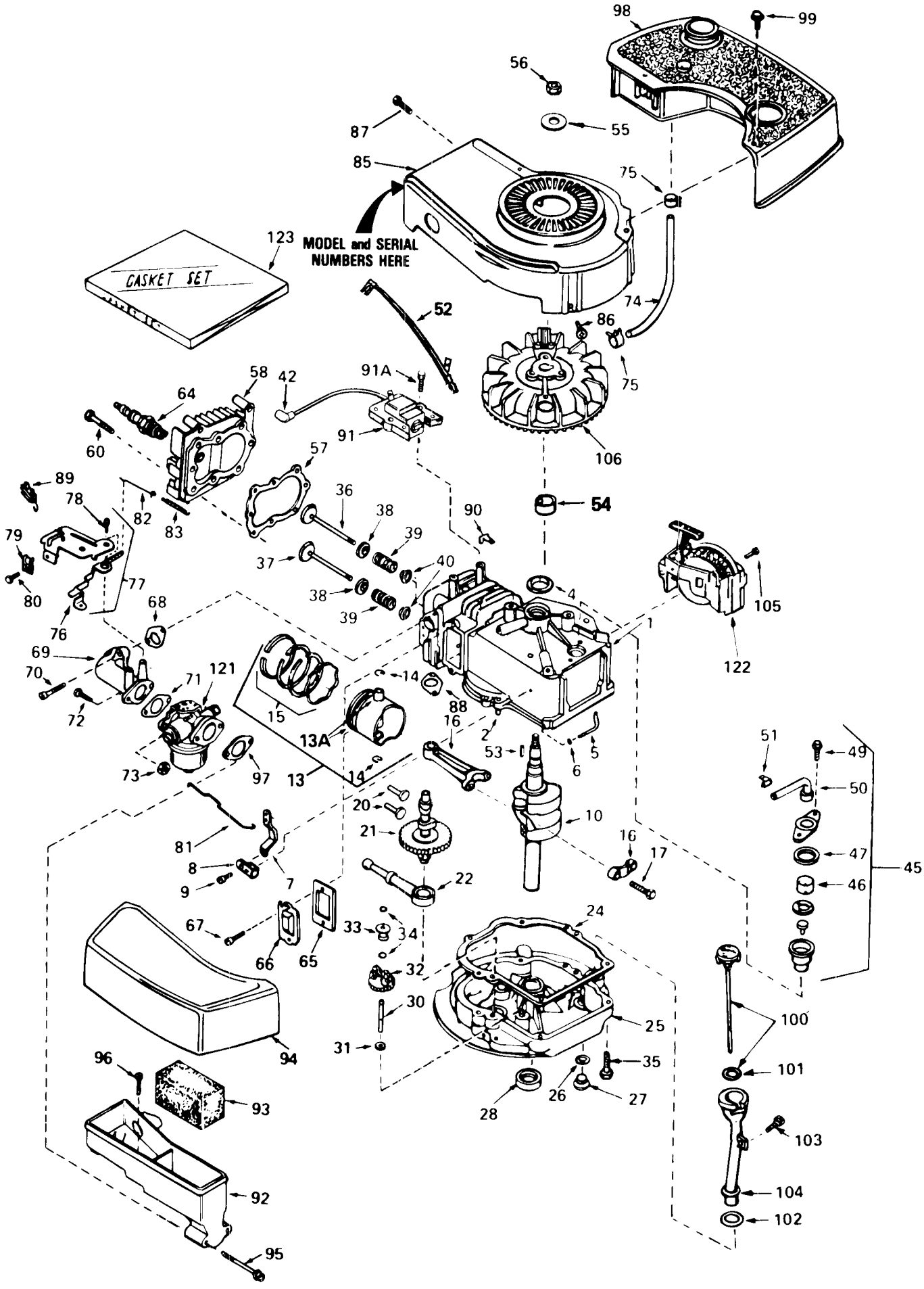

ENGINE TECUMSEH MODEL NO. TNT 100-10086E

Ref. No.	Part No.	Description	No. Used
1	34429	Cylinder Assy. (Incl. Ref. #2 & 4)	1
2	26727	Pin, Dowel	2
4	32600	Seal, Oil	1
5	30589	Rod, Governor (Incl. Ref. #6)	1
6	28277	Washer, Flat	1
7	32651	Lever, Governor	1
8	31335	Clamp, Governor Lever	1
9	650548	Screw, Hex Washer Hd.	1
10	34440	Crankshaft	1
13	34851	Piston, Pin & Ring Assy. (Std.) (Incl. Ref. #13A, 14 & 15)	1
13	34852	Piston, Pin & Ring Assy. (.010 oversize) (Incl. Ref. #13A, 14 & 15)	1
13	34853	Piston, Pin & Ring Assy. (.020 oversize) (Incl. Ref. #13A, 14 & 15)	1
13A	32603B	Piston & Pin Assy. (Std.) (Incl. Ref. #14)	1
13A	32604B	Piston & Pin Assy. (.010 oversize) (Incl. Ref. #14)	1
13A	32605B	Piston & Pin Assy. (.020 oversize) (Incl. Ref. #14)	1
14	20381	Ring, Piston Pin Retaining	2
15	34854	Ring Set, Piston (Std.)	1
15	34855	Ring Set, Piston (.010 oversize)	1
15	34856	Ring Set, Piston (.020 oversize)	1
16	30963B	Rod Assy., Connecting (Incl. Ref. #17)	1
17	32610A	Bolt, Connecting Rod	2
20	27241	Lifter, Valve	2
21	33553	Camshaft (Mech. Compression Release)	1
22	29914	Pump Assy., Oil	1
24	*26750A	Gasket, Mounting Flange	1
25	30594B	Flange Assy., Mounting (Incl. Ref. #26 thru 30)	1
26	*28833	Gasket, Oil Drain Plug	1
27	27244	Plug, Oil Drain	1
28	26208	Seal, Oil	1
30	30574	Shaft, Mechanical Governor	1
31	30590A	Washer, Flat	1
32	30591	Gear Assy., Governor (Incl. Ref. #31)	1
33	30588A	Spool, Governor	1
34	29193	Ring, Retaining	2
35	650488	Screw, Hex Hd.	6
36	29314B	Valve, Intake (Std.) (Incl. Ref. #40)	1
36	29315C	Valve, Intake (1/32" oversize) (Incl. Ref. #40)	1
37	29313C	Valve, Exhaust (Std.) (Incl. Ref. #40)	1
37	29315C	Valve, Exhaust (1/32" oversize) (Incl. Ref. #40)	1
38	31671	Cap, Upper Valve Spring	2
39	31672	Spring, Valve	2
40	31673	Cap, Lower Valve Spring	2
42	610118	Cover, Spark Plug	1
45	34214A	Breather Assy. (Incl. Ref. #46 thru 51)	1
46	33734	Element, Breather	1
47	*33735	Gasket, Breather	1
49	30200	Screw, Hex Washer Hd. Self-Tap	2
50	33886	Tube, Breather	1
51	33887	Clip, Breather Tube	1
52	34231	Wire, Ground	1
53	611004	Key, Flywheel (Solid State)	1
54	34080	Spacer, Flywheel Key	1
55	650815	Washer, Belleville	1
56	650816	Nut, Flywheel	1
57	*33015	Gasket, Cylinder Head	1
58	34342	Head, Cylinder	1
60	6021A	Screw, Hex Flange Hd.	8
64	33636	Plug, Spark (Champion J-8 or equivalent) Except for Canada	1
64	34251 Canada	Resistor Spark Plug (Canadian regulations require RJ-17LM resistor spark plug)	1
65	*27234	Gasket, Valve Spring Cover	1
66	32755	Cover, Valve Spring Box	1
67	650128	Screw, Fil. Hd.	2
68	*34690	Gasket, Intake Pipe	1
69	33004A	Pipe, Intake (Incl. Ref. #68)	1
70	650451	Screw, Hex Hd.	2
71	*31688	Gasket, Carburetor	1
72	6201	Screw, Hex Hd.	2
73	29752	Nut & Lockwasher Assy.	2
74	30705	Line, Fuel	1
75	26460	Clamp, Fuel Line	2
76	34310	Lever, Control	1
77	33889A	Control Assy., Speed (Incl. Ref. #76, 78 & 89)	1
78	650804	Screw, Hex Washer Hd. Shoulder Self-Tap	1
79	27793	Clip, Conduit	1
80	28942	Screw, Hex Washer Hd.	1
81	34336	Link, Governor-to-Throttle	1
82	33151	Link, Governor Spring	1
83	33890	Spring, Governor	1
85	33891B	Housing, Blower	1
86	650561	Screw, Hex Washer Hd.	2
87	30200	Screw, Hex Washer Hd. — Self Tapping	2
88	*30081	Gasket, Exhaust	1

*Indicates Parts Included in Gasket Set, Ref. #123.

ENGINE TECUMSEH MODEL NO. TNT 100-10086E (Continued)

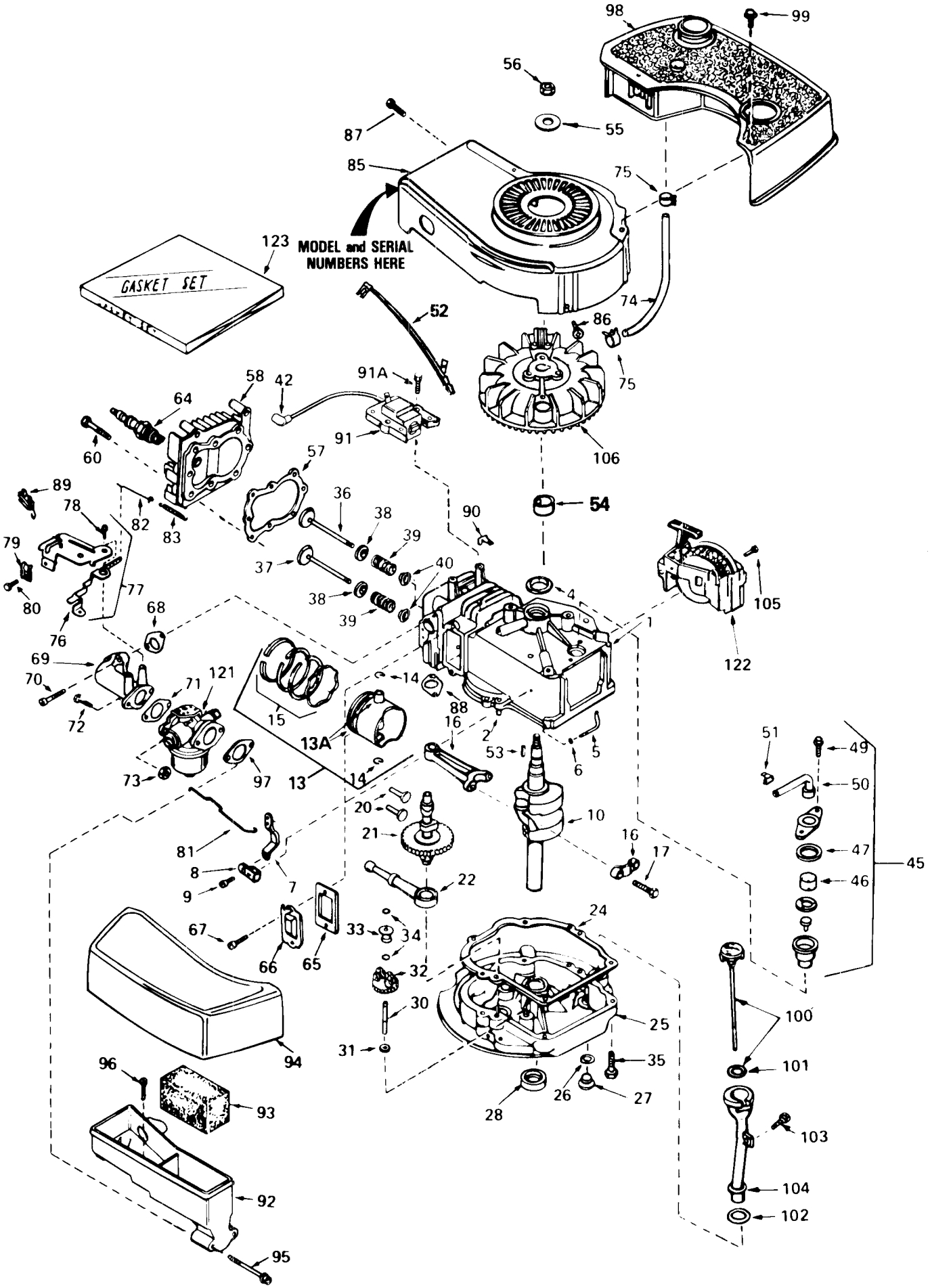

ENGINE TECUMSEH MODEL NO. TNT 100-10086E (Continued)

Ref. No.	Part No.	Description	No. Used
89	610973	Terminal Assy.	1
90	29443	Clip, Fuel Line	1
91	34443A	Lamination & Coil Assy. (Solid State) (Incl. Ref. #42)	1
91A	650814	Screw, Hex Hd.	2
92	33895	Body, Air Cleaner	1
93	33896	Filter, Air Cleaner	1
94	33897	Cover, Air Cleaner	1
95	650762	Screw, Fil. Hd.	2
96	650784	Screw, Hex Hd. Taptite W/Flatwasher	1
97	*33051	Gasket, Air Cleaner	1
98	33904B	Tank, Fuel	1
99	28763	Screw, Hex Washer Hd.	2
100	33894A	Dipstick, Oil (Incl. Ref. #101)	1
101	33590	"O" Ring	1
102	34265	Gasket, Fill Tube	1
103	650562	Screw, Hex Washer Hd.	1
104	34380	Tube, Oil Fill	1
105	650802	Screw, Hex Washer Hd. Taptite	2
106	611046	Flywheel	1
121	632050A	Carburetor (Incl. Ref. #71)	1
122	590531	Starter, Side Mount	1
123	33906A	Gasket Set	1

*Indicates Parts Included in Gasket Set, Ref. #123.

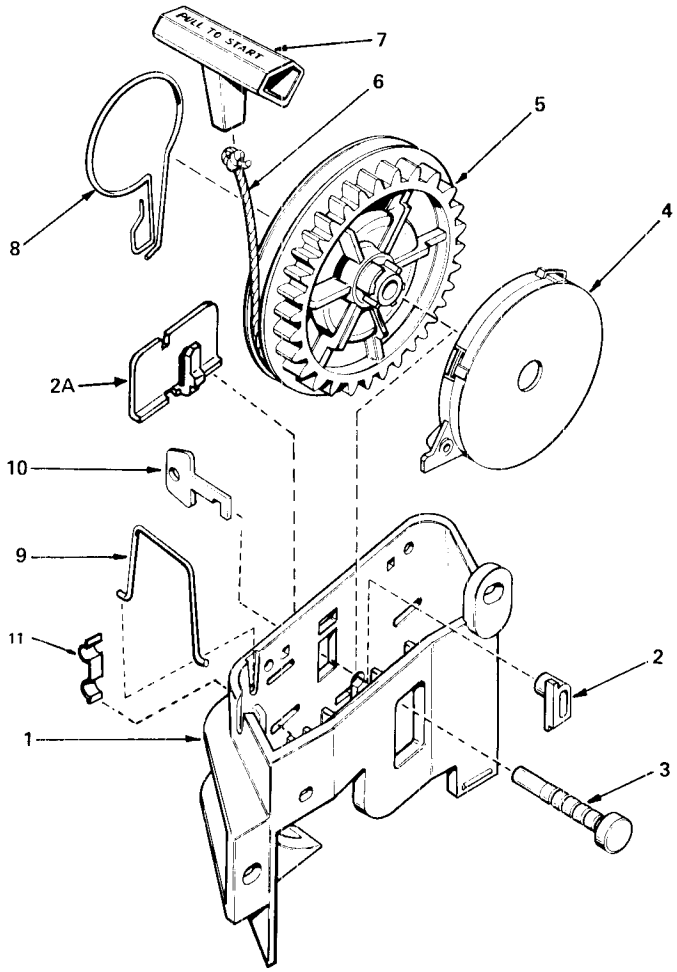

STARTER NO. 590531

Ref. No.	Part No.	Description	No. Used
1	590523	Bracket, Starter	1
2	590524	Pawl, Locking (Not used on all engine models)	1
2A	590538	Clip, Starter Bracket (Used on starters not equipped with Locking Pawl, Ref. #2)	1
3	590525	Pin, Pulley	1
4	590526	Spring Assy., Rewind (Incl. Ref. #3)	1
5	590522	Pulley	1

Ref. No.	Part No.	Description	No. Used
6	590527	Rope, Starter (Length 65" & 9/64" Diameter)	1
7	590452	Handle, Starter	1
8	590528	Spring, Brake	1
9	590529	Clip, Rope	1
10	590530	Key (Not used on all engine models)	1
11	590500	Clip, Bowden Wire (Not used on all engine models)	1

PRODUCT CHANGES

In an effort to make improvements available to TORO owners as quickly as possible, minor changes are incorporated into Toro's products from time to time that do not become immediately shown in the Parts Catalog. If such a change apparently has been made in your unit, which is not reflected in your manual, see your TORO Distributor or his Authorized TORO Service Dealer for information and part numbers.

IDENTIFICATION AND ORDERING

MODEL AND SERIAL NUMBERS

The Mower has two identification numbers: a model number and a serial number. The two numbers are stamped on a decal which is located on the mower housing between the rear wheels. In any correspondence concerning the mower, supply model and serial numbers to assure that correct information and replacement parts are obtained.

To order replacement parts from an Authorized TORO Service Dealer, supply the following information:

1. Model and serial numbers of the mower.
2. Part number, description, and quantity of part(s) desired.

Note: Do not order by reference number if a parts catalog is being used; use the PART NUMBER.

The Toro Promise

A TWO YEAR LIMITED WARRANTY

The Toro Company promises to repair your TORO Product if defective in materials or workmanship. The following time periods from the date of purchase apply:

Residential Product . . . . . 2 Years
Residential Products Used Commercially . . . 45 Days

The costs of parts and labor are included, but the customer pays the transportation costs. Just return any residential product to an Authorized TORO Service Dealer or TORO Distributor.

Should you feel your TORO Product is defective and wish to rely on The Toro Promise, the following procedure is recommended:

1. Contact any Authorized TORO Service Dealer, TORO Master Service Dealer, or TORO Distributor (the Yellow Pages of your telephone directory is a good reference source).
2. He will either instruct you to return the product to him or recommend another Authorized TORO Service outlet which might be more convenient.
3. Bring the product along with your original sales slip, or other evidence of purchase date, to the service dealer.
4. The servicing dealer will inspect the unit, advise you whether the product is defective and, if so, make all repairs necessary to correct the defect without extra charge to you.

If for any reason you are dissatisfied with the dealer's analysis of the defect or the service performed, you may contact us.

Write:

TORO Consumer Service Department
8111 Lyndale Avenue South
Minneapolis, Minnesota 55420

The above remedy of product defects through repair by an Authorized TORO Service Dealer is the purchaser's sole remedy for any defect.

THERE IS NO OTHER EXPRESS WARRANTY. ALL IMPLIED WARRANTIES OF MERCHANTABILITY AND FITNESS FOR USE ARE LIMITED TO THE DURATION OF THE EXPRESS WARRANTY.

Some states do not allow limitations on how long an implied warranty lasts, so the above limitation may not apply to you.

This warranty applies only to parts or components which are defective and does not cover repairs necessary due to normal wear, misuse, accidents, or lack of proper maintenance. Regular, routine maintenance of the unit to keep it in proper operating condition is the responsibility of the owner.

All warranty repairs reimbursable under The Toro Promise must be performed by an Authorized TORO Service Dealer using Toro approved replacement parts.

Repairs or attemped repairs by anyone other than an Authorized TORO Service Account are not reimbursable under The Toro Promise. In addition, these unauthorized repair attempts may result in additional malfunctions, the correction of which is not covered by warranty.

THE TORO COMPANY IS NOT LIABLE FOR INDIRECT, INCIDENTAL OR CONSEQUENTIAL DAMAGES IN CONNECTION WITH THE USE OF THE PRODUCT INCLUDING ANY COST OR EXPENSE OF PROVIDING SUBSTITUTE EQUIPMENT OR SERVICE DURING PERIODS OF MALFUNCTION OR NON-USE.

Some states do not allow the exclusion or limitation of incidental or consequential damages, so the above limitation or exclusion may not apply to you.

This warranty gives you specific legal rights, and you may also have other rights which vary from state to state.

COUNTRIES OTHER THAN THE UNITED STATES OR CANADA

Customers who have purchased TORO products exported from the United States or Canada should contact their TORO Distributor (Dealer) to obtain guarantee policies for your country, province or state. If for any reason you are dissatisfied with your Distributor's service or have difficulty obtaining guarantee information, contact the TORO importer. If all other remedies fail, you may contact us at The Toro Company.

Compliance with Radio Interference Regulations Certified.
Certifie Conforme au Reglement sur le Brouillage Radioelectrique.

MAINTENANCE RECORD

Date	Hours Used	Oil Change	Air Cleaner Service	Lubrication	Winter Storage	Spring Service	Spark Plug Gap

Litho in U.S.A.