Form No. 3351-108

55cm Recycler®
Lawn Mower

Model No. 20655—Serial No. 240000001 and Up

Operator's Manual

Introduction

Read this manual carefully to learn how to operate and maintain your product properly and to avoid injury and product damage. You are responsible for operating the product properly and safely.

You may contact Toro directly at www.Toro.com for product and accessory information, help finding a dealer, or to register your product.

Whenever you need service, genuine Toro parts, or additional information, contact an Authorized Service Dealer or Toro Customer Service and have the model and serial numbers of your product ready. The illustration below identifies the location of the model and serial numbers on the product. Write the numbers in the space provided below:

Model #:

Serial #:

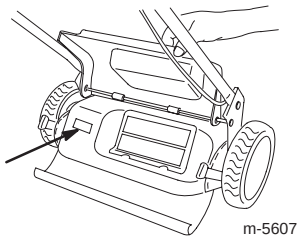

m-5607

This manual identifies potential hazards and has safety messages identified by the following words:

- **Danger** signals an extreme hazard that **will** cause serious injury or death if you do not follow the recommended precautions.
- **Warning** signals a hazard that **may** cause serious injury or death if you do not follow the recommended precautions.
- **Caution** signals a hazard that may cause minor or moderate injury if you do not follow the recommended precautions.

This manual uses two other words to highlight information. **Important:** calls attention to special mechanical information and **Note:** emphasizes general information worthy of special attention.

Safety

This lawn mower meets or exceeds the EN 836 and the ISO 5395 standards in effect at the time of production.

Read and understand the contents of this manual before the engine is ever started.

⚠ **This is the safety alert symbol. It is used to alert you to potential personal injury hazards. Obey all safety messages that follow this symbol to avoid possible injury or death.**

Improperly using or maintaining this mower could result in injury or death. To reduce this potential, comply with the following safety instructions.

The following instructions have been adapted from ANSI/OPEI standard B71.1—1998 and ISO standard 5395:1990(E).

General Operation

- Read, understand, and follow all instructions on the machine and in the manual. Be thoroughly familiar with the controls and the proper use of the mower before starting.
- Do not put hands or feet near or under rotating parts. Keep clear of the discharge opening at all times.
- Only allow responsible individuals, who are familiar with the instructions, to operate the mower.
- Clear the area of objects such as rocks, toys, wire, bones, sticks etc., which could be picked up and thrown by the blade.
- Be sure the area is clear of other people before mowing. Stop mower if anyone enters the area.
- Do not operate the mower when barefoot or wearing open sandals. Always wear substantial foot wear.
- Do not pull the mower backward unless absolutely necessary. Look down and behind before and while moving backward.
- Do not operate the mower without proper guards, plates, grass catcher or other safety protective devices in place.

© 2003—The Toro Company
8111 Lyndale Ave., Bloomington, MN 55420, USA

Printed in the USA
All Rights Reserved

Original Instructions (GB)
Register your product at www.Toro.com

CE

- See the Toro instructions for proper operation and installation of accessories. Only use Toro accessories.
- Stop the blade when crossing gravel drives, walks, or roads.
- Stop the engine whenever you leave the equipment, before cleaning the mower or unclogging the chute.
- Shut the engine off and wait until the blade comes to complete stop before removing grass catcher.
- Mow only in daylight or good artificial light.
- Do not operate the mower while under the influence of alcohol or drugs.
- Never operate mower in wet grass. Always be sure of your footing; keep a firm hold on the handle and walk; never run.
- Never pick up or carry a lawn mower while the engine is running.
- Disengage the self-propelled mechanism before starting the engine.
- If the equipment should start to vibrate abnormally, stop the engine and check immediately for the cause. Vibration is generally a warning of trouble.
- Always wear safety goggles or safety glasses with side shields when operating mower.

Slope Operation

- Slopes are a major factor related to slip and fall accidents which can result in severe injury. All slopes require extra caution. If you feel uneasy on a slope, do not mow it.
- Mow across the face of slopes; never up and down. Exercise extreme caution when changing direction on slopes.
- Remove objects such as rocks, tree limbs, etc. Watch for holes, ruts, or bumps. Tall grass can hide obstacles.
- Do not mow near drop-offs, ditches, or embankments. The operator could lose footing or balance.
- Do not mow excessively steep slopes.
- Do not mow on wet grass. Reduced footing could cause slipping.

Children

Tragic accidents can occur if the operator is not alert to the presence of children. Children are often attracted to the mower and the mowing activity. Never assume that children will remain where you last saw them.

- Keep children out of the mowing area and under the watchful care of a responsible adult
- Be alert and turn mower off if children enter the area.
- Before and while moving backward, look behind and down for small children.
- Never allow children to operate the mower.
- Use extra care when approaching blind corners, shrubs, trees, or other objects that may obscure vision.

Service

- Use extra care in handling gasoline. It is flammable and vapors are explosive.
  - Use only an approved container.
  - Never remove gas cap or add fuel with the engine running. Allow engine to cool before refueling. Do not smoke.
  - Never refuel the machine indoors.
  - Never store the machine or fuel container inside where there is an open flame, such as a water heater.
- Never run an engine inside a closed area.



Exhaust contains carbon monoxide, an odorless, deadly poison that can kill you.

Do not run the engine indoors or in an enclosed area.

- Never make adjustments or repairs with the engine running. Disconnect the spark plug wire, and keep the wire away from the plug to prevent accidental starting.
- Keep all nuts and bolts, especially blade attachment bolts, tight and keep equipment in good condition.
- Never tamper with safety devices. Check their proper operation regularly.
- Keep mower free of grass, leaves, or other debris build-up. Clean up oil or fuel spillage. Allow mower to cool before storing.
- Stop and inspect the equipment if you strike an object. Repair, if necessary, before restarting.
- Never attempt to make wheel height adjustments while the engine is running.
- Grass catcher components are subject to wear, damage, and deterioration, which could expose moving parts or allow objects to be thrown. Frequently check components and replace with genuine Toro parts, when necessary.

- Mower blades are sharp and can cut. Wrap the blade or wear gloves, and use extra caution when servicing them.
- Replace a faulty muffler.
- Do not change the engine governor setting or overspeed the engine.

Sound Pressure

This unit has a maximum sound pressure level at the operator's ear of 85 dBA, based on measurements of identical machines per Directive 98/37/EC.

Sound Power

This unit has a guaranteed sound power level of 100 dBA, based on measurements of identical machines per Directive 2000/14/EC.

Vibration

This unit does not exceed a hand/arm vibration level of 4.5 m/s^2, based on measurements of identical machines per Directive 98/37/EC.

Safety/Instruction Decals

Important: Safety and instruction decals are located near areas of potential danger. Replace damaged decals.



94-8072

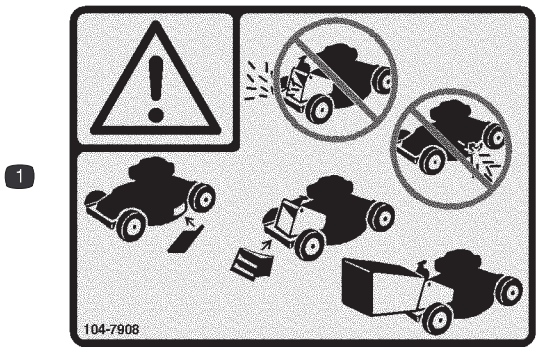

104-7908

1. Warning—do not operate the mower without the rear discharge plug or bag in place; do not operate the mower without the side discharge cover or deflector in place.



104-7909

1. Warning—read the *Operator's Manual.*
2. Thrown object hazard—keep bystanders a safe distance from the machine.
3. Thrown object hazard, mower—keep the deflector in place.
4. Cutting/dismemberment hazard of hand or foot, mower blade—stay away from moving parts.
5. Cutting/dismemberment hazard of hand or foot, mower blade—do not operate up and down slopes; operate side to side on slopes; stop the engine before leaving the operating position; and look behind you when backing.

Product Overview

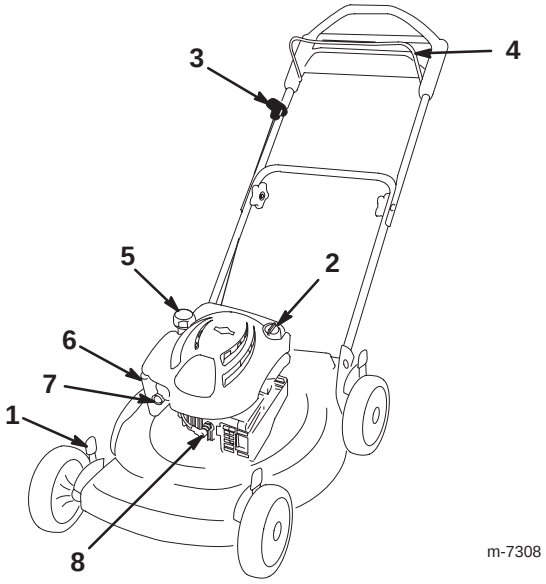

m-7308

1. Cutting height lever
2. Oil fill/Dipstick
3. Recoil start handle
4. Blade control bar
5. Fuel tank cap
6. Air filter
7. Primer
8. Spark plug

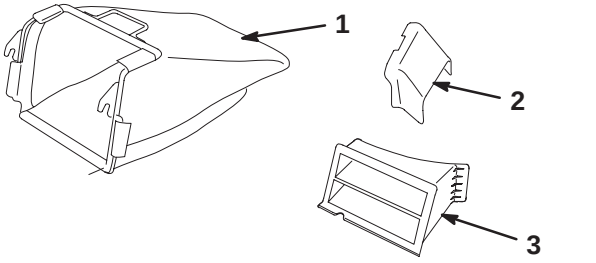

m-5630/m-5637/m-5587

1. Grass bag
2. Side discharge chute
3. Rear discharge plug (installed)

Setup

Important: Remove and discard the protective plastic sheet that covers the engine.

Unfolding the Handle

Folding or unfolding the handle improperly can damage the cables, causing an unsafe operating condition.

- **Do not damage the cables when folding or unfolding the handle.**
- **If a cable is damaged, contact an Authorized Service Dealer.**

1. Carefully move the upper handle forward until the handle halves are in line and nest together as shown.

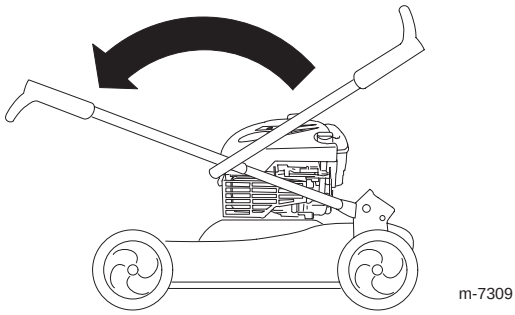

m-7309

2. Tighten the handle knobs.

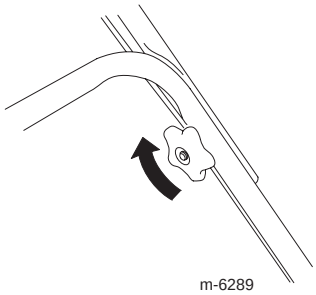

m-6289

3. Rotate the handle rearward (as shown) until it clicks into place.

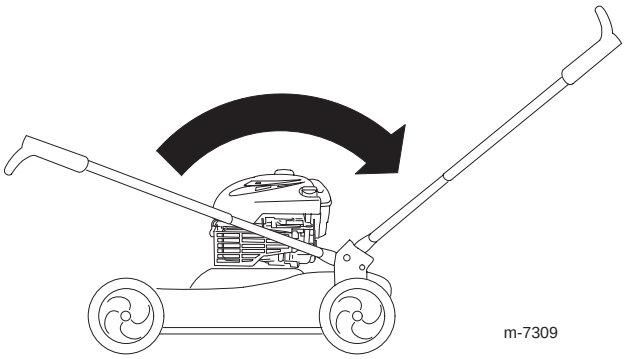

m-7309

Filling the Engine with Oil

Important: Your mower does not come with oil in the engine.

1. Remove the dipstick.

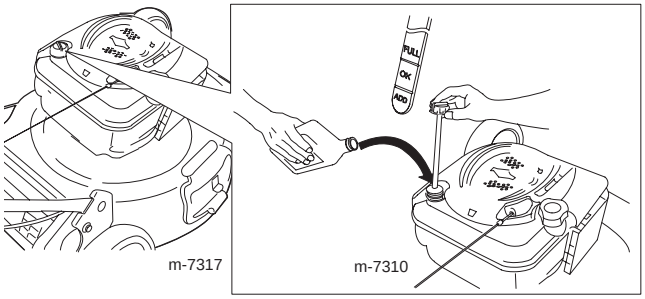

2. **Slowly** pour oil into the oil fill tube to raise the oil level to the **Full** mark on the dipstick. **Do not overfill.**
3. Install the dipstick securely.

Important: **Change the engine oil after the first 5 operating hours;** change it yearly thereafter. Refer to Changing the Engine Oil on page 12.

Max. fill: 20 oz., type: SAE 30W detergent oil with an API service classification of SF, SG, SH, SJ, SL, or higher.

Before Operating

Gasoline is extremely flammable and explosive. A fire or explosion from gasoline can burn you and others.

- **To prevent a static charge from igniting the gasoline, place the container and/or mower directly on the ground before filling, not in a vehicle or on an object.**
- **Fill the tank outdoors when the engine is cold. Wipe up spills.**
- **Do not handle gasoline when smoking or around an open flame or sparks.**
- **Store gasoline in an approved fuel container, out of the reach of children.**

Adjusting the cutting height may bring you into contact with the moving blade, causing serious injury.

- **Stop the engine and wait for all moving parts to stop.**
- **Do not put your fingers under the housing when adjusting the cutting height.**

Filling the Fuel Tank

Fill the fuel tank with fresh unleaded regular gasoline from a major name-brand service station.

Important: To reduce starting problems, add fuel stabilizer to the fuel all season, mixing it with gasoline less than 30 days old.

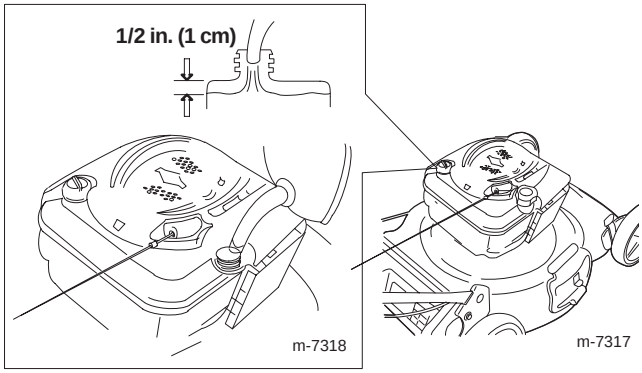

Checking the Engine Oil Level

1. Remove the dipstick, wipe it clean, and fully install the dipstick.

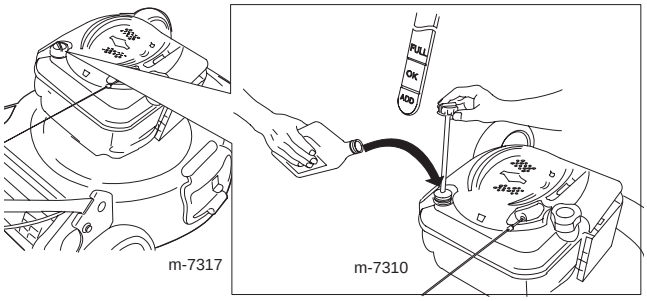

2. Remove the dipstick and check the oil level. If the oil level is below the **Add** mark on the dipstick, **slowly** pour oil into the oil fill tube to raise the oil level to the **Full** mark on the dipstick. **Do not overfill.** (Max. fill: 20 oz., type: SAE 30 detergent oil with an API service classification of SF, SG, SH, SJ, SL, or higher.)

3. Install the dipstick.

Adjusting the Cutting Height

Adjust the cutting height as desired. Set all four wheels to the same height.

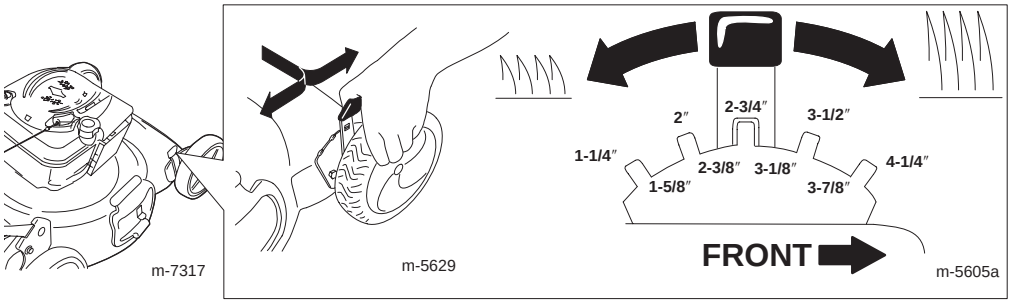

Adjusting the Handle Height

Squeeze the bottom of the handle halves together (as shown) and change the handle holes in which the pins (A) are mounted, as follows:

- Raise the handle using hole (B).
- Lower the handle using hole (C).

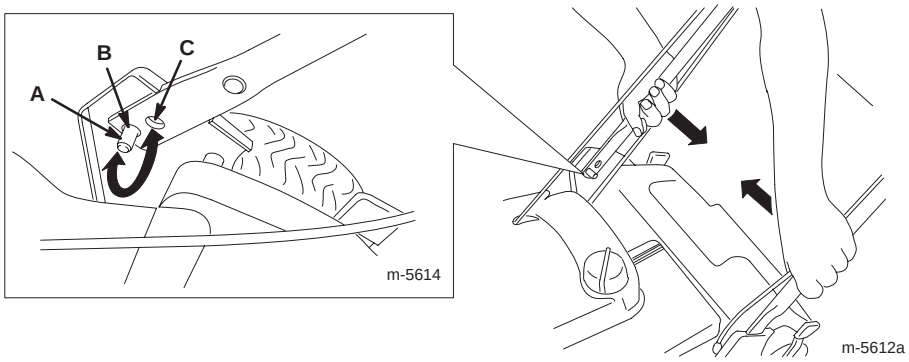

Operation

Starting the Engine

1. Firmly push in the primer 3 times with your thumb, holding the primer in for a second before releasing it each time.

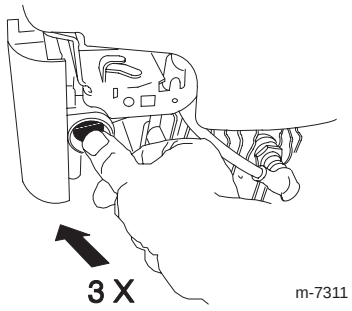

m-7311

Note: If the air temperature is below 55°F (13°C), firmly push the primer in 5 times.

2. Hold the blade control bar (A) against the handle.

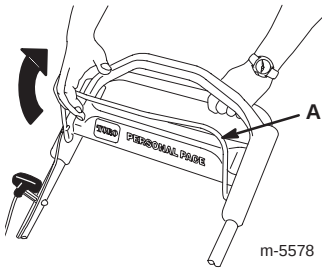

m-5578

3. Start the engine using the recoil starter.

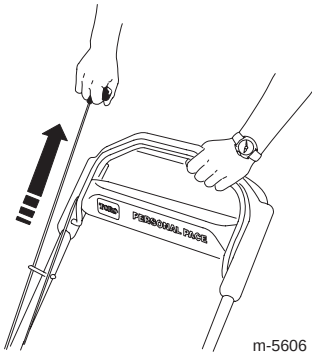

m-5606

4. If the mower does not start in 1 or 2 pulls, press the primer button 1 or 2 times and try starting it again.

Using the Self-propel Drive

To operate the self-propel drive, simply walk with your hands on the upper handle and your elbows at your sides, and the mower will automatically keep pace with you.

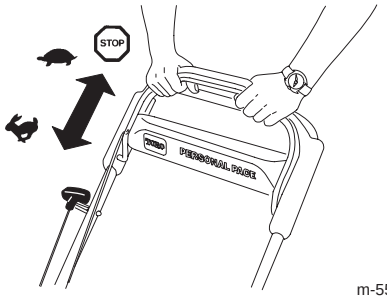

m-5582


m-5613

Stopping the Engine

To stop the engine, release the blade control bar. Remove the ignition key when you leave the mower.

Important: When you release the blade control bar, both the engine and blade should stop within 3 seconds. If they do not stop properly, stop using your mower immediately and contact an Authorized Service Dealer.

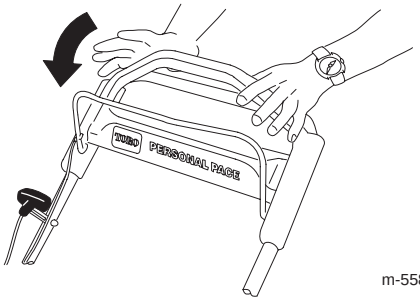

m-5582

Recycling the Clippings

Your mower comes from the factory ready to recycle the grass and leaf clippings back into the lawn.

If the grass bag is on the mower, remove it (refer to Removing the Grass Bag on page 9) before recycling the clippings. If the side discharge chute is on the mower, remove it and lock the side discharge door (refer to Removing the Side Discharge Chute on page 9) before recycling the clippings.

Important: Ensure that the rear discharge plug is in place before you recycle the clippings.

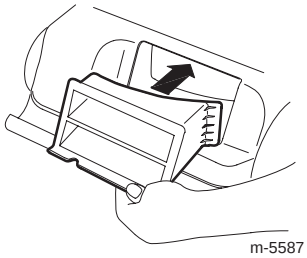
m-5587

Bagging the Clippings

Use the grass bag when you want to collect grass and leaf clippings from the lawn.

If the side discharge chute is on the mower, remove it and lock the side discharge door (refer to Removing the Side Discharge Chute on page 9) before bagging the clippings.

The blade is sharp; contacting the blade can result in serious personal injury.

Stop the engine and wait for all moving parts to stop before leaving the operating position.

Installing the Grass Bag

1. Go to the left side of the lawn mower.
2. Step on the handle release bar.

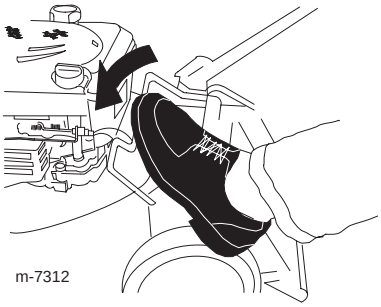
m-7312

3. Raise the handle to the vertical position.

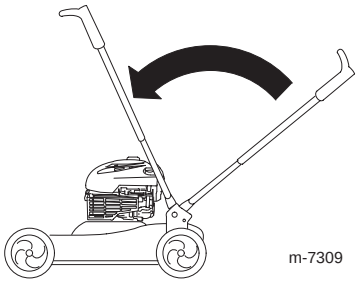
m-7309

4. Raise and hold up the rear door.

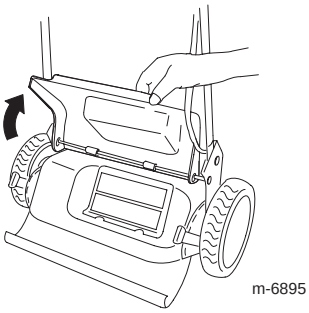
m-6895

5. Remove the rear discharge plug.

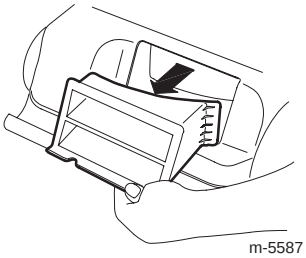
m-5587

6. Install the bag.

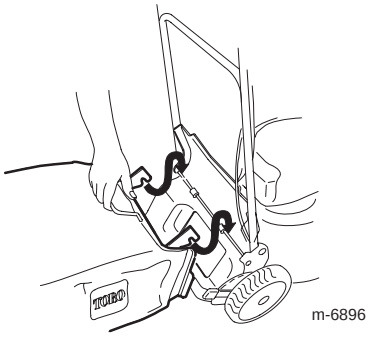
m-6896

7. Lower the rear door.
8. Return the handle to the operating position.

Removing the Grass Bag

The blade is sharp; contacting the blade can result in serious personal injury.

Stop the engine and wait for all moving parts to stop before leaving the operating position.

1. Go to the left side of the lawn mower.

2. Step on the handle release lever.

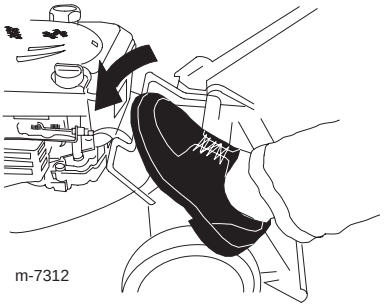
m-7312

3. Raise the handle to the vertical position.

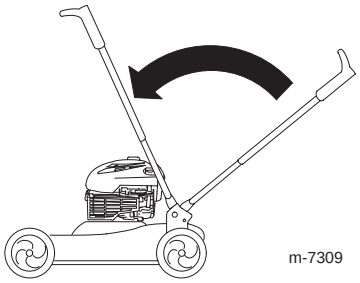
m-7309

4. Raise and hold up the rear door.

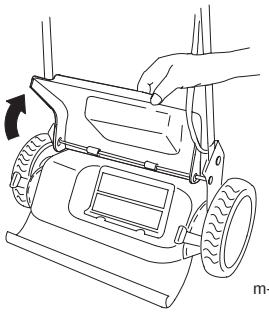
m-6895

5. Remove the bag.

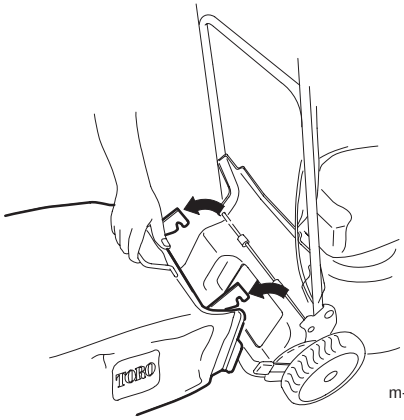

m-6896

Side Discharging the Clippings

Use the side discharge for cutting very tall grass.

If the bag is on the mower, remove it and insert the rear discharge plug (refer to Removing the Grass Bag on page 9) before side discharging the clippings.

Important: Ensure that the rear discharge plug is in place before you side discharge the clippings.

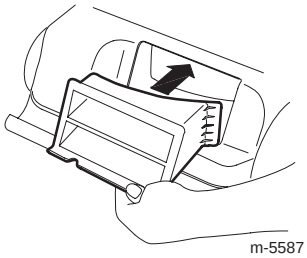
m-5587

Installing the Side Discharge Chute

1. Unlock the side discharge door.

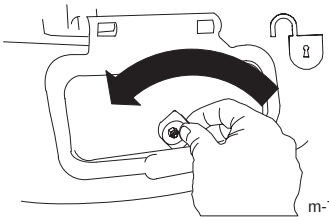
m-7195

2. Lift open the side discharge door.

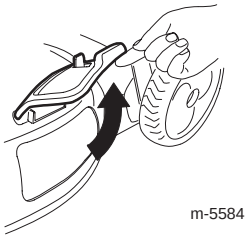
m-5584

3. Install the side discharge chute and close the door onto the chute.

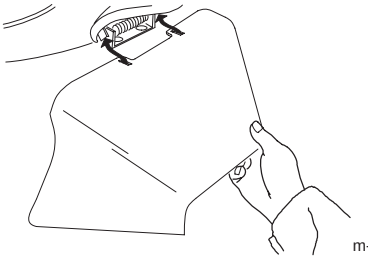
m-5585

Removing the Side Discharge Chute

To remove the side discharge chute, reverse the steps above.

Important: Lock the side discharge door after you close it.

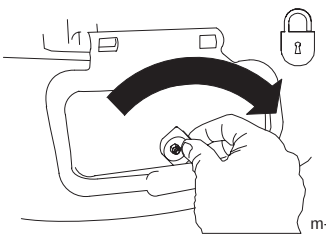
m-7196

Operating Tips

- Clear the area of sticks, stones, wire, branches, and other debris that the blade could hit.
- Avoid striking solid objects with the blade. Never deliberately mow over any object.
- If the mower strikes an object or starts to vibrate, immediately stop the engine, disconnect the wire from the spark plug, and examine the mower for damage.
- For best performance, install a new blade before the cutting season begins.
- Replace the blade when necessary with a Toro replacement blade.

Cutting Grass

- Cut only about a third of the grass blade at a time. Do not cut below the 2-inch (51 mm) setting unless the grass is sparse or it is late fall when grass growth begins to slow down. Refer to Adjusting the Cutting Height on page 6.
- When cutting grass over 6 inches (15 cm) tall, mow at the highest cutting height setting and walk slower; then mow again at a lower setting for the best lawn appearance. If the grass is too long, the mower may plug and cause the engine to stall.

Cutting Leaves

- After cutting the lawn, ensure that half of the lawn shows through the cut leaf cover. You may need to make more than one pass over the leaves.
- If there are more than 5 inches (13 cm) of leaves on the lawn, set the front cutting height one or two notches higher than the rear cutting height.
- Slow down your mowing speed if the mower does not cut the leaves finely enough.
- If you mow over oak leaves, you can add lime to the grass in the spring to reduce the acidity of the leaves.
- Mow only dry grass or leaves. Wet grass and leaves tend to clump on the yard and can cause the mower to plug or the engine to stall.

Wet grass or leaves can cause serious injury if you slip and contact the blade. Mow only in dry conditions.

- Alternate the mowing direction. This helps disperse the clippings over the lawn for even fertilization.

If the finished lawn appearance is unsatisfactory, try one or more of the following:

- Replace the blade or have it sharpened.
- Walk at a slower pace while mowing.
- Raise the cutting height on your mower.
- Cut the grass more frequently.
- Overlap cutting swaths instead of cutting a full swath with each pass.
- Set the cutting height on the front wheels one notch lower than the rear wheels. For example, set the front wheels at 2 inches (51 mm) and the rear wheels at 2-3/8 inches (60 mm).

Maintenance

Note: Determine the left and right sides of the mower by standing in the operating position.

Recommended Maintenance Schedule

Important: Refer to your engine operator's manual for additional maintenance procedures.

Maintenance Service Interval	Maintenance Procedure
Each Use	• Check the engine oil level. • Remove grass clippings and dirt from under the housing.
1 Year (25 Hours)[1]	• Replace the air filter; replace it more frequently in dusty operating conditions. • Check the spark plug (refer to your engine operator's manual). • Replace the blade or have the blade sharpened; replace it or have it sharpened more frequently if the edge dulls quickly. • Lubricate the wheel gears.
2 Years (50 Hours)[1]	• Change the engine oil.[2]
4 Years (100 Hours)[1]	• Replace the spark plug (refer to your engine operator's manual). • Clean the cooling system (refer to your engine operator's manual).
Annual Storage	• Empty the fuel tank before repairs as directed or before annual storage.

[1]Whichever comes first

[2]Change the engine oil after the first 5 operating hours.

Preparing for Maintenance

1. Stop the engine and wait for all moving parts to stop.

2. Disconnect the spark plug wire from the spark plug before performing any maintenance procedure.

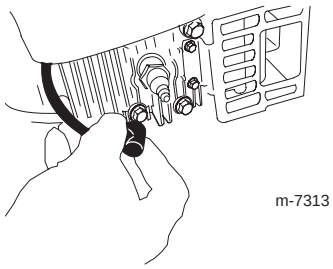
m-7313

3. After performing the maintenance procedure(s), connect the spark plug wire to the spark plug.

Note: Before tipping the mower to change the oil or replace the blade, allow the fuel tank to run dry through normal usage. If you must tip the mower prior to running out of fuel, use a hand fuel pump to remove the fuel. Always tip the mower onto its **right** side.

Tipping the mower may cause the fuel to leak. Gasoline is flammable, explosive and can cause personal injury.

Run the engine dry or remove the gasoline with a hand pump; never siphon.

Replacing the Air Filter

Replace the air filter yearly; replace it more frequently in dusty operating conditions.

Refer to Preparing for Maintenance on page 11.

1. Use a screw driver to open the air filter cover.

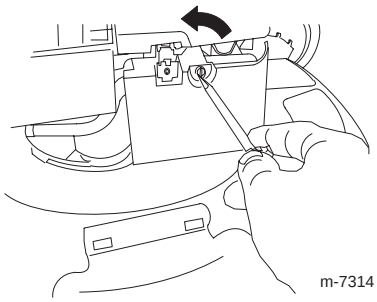
m-7314

2. Replace the air filter.

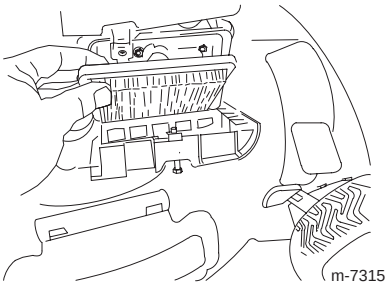
m-7315

3. Install the cover.

Changing the Engine Oil

Change the engine oil after the first 5 operating hours; change it yearly thereafter.

Run the engine a few minutes before changing the oil to warm it. Warm oil flows better and carries more contaminants.

Refer to Preparing for Maintenance on page 11.

1. Remove the dipstick.

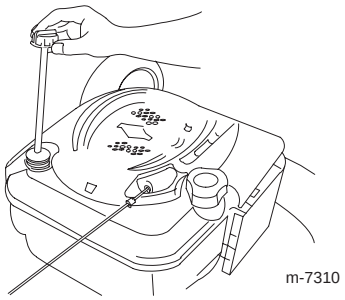

m-7310

2. Tip the mower onto its **left** side to drain the used oil out through the oil fill tube.

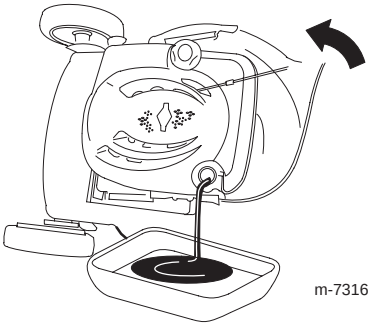

m-7316

3. **Slowly** pour oil into the oil fill tube until the oil level reaches the **Full** line on the dipstick. **Do not overfill.** (Max. fill: 20 oz., type: SAE 30W detergent oil with an API service classification of SF, SG, SH, SJ, SL, or higher.)

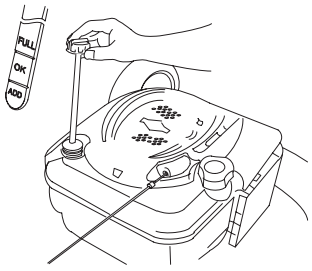

m-7310

4. Install the dipstick securely.

5. Dispose of the used oil properly at a local recycling center.

Lubricating the Wheel Gears

1. Remove the wheel bolts on the **rear** wheels and remove the rear wheels.

2. Apply a lubricating oil to the inner and outer sides of the gear as shown.

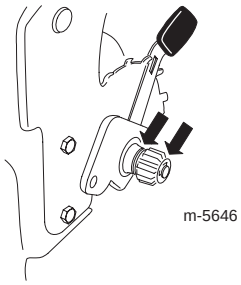

m-5646

3. Install the rear wheels.

Replacing the Blade

Important: **You will need a torque wrench to install the blade properly.** If you do not have a torque wrench or are uncomfortable performing this procedure, contact an Authorized Service Dealer.

Examine the blade whenever you run out of gasoline. If the blade is damaged or cracked, replace it immediately. If the blade edge is dull or nicked, have it sharpened or replace it.

The blade is sharp; contacting the blade can result in serious personal injury.

Wear cloth or leather gloves when servicing the blade.

1. Disconnect the spark plug wire from the spark plug and hook it onto the retaining post. Refer to Preparing for Maintenance on page 11.

2. Tip the mower onto its **left** side.

3. Use a block of wood to hold the blade steady.

4. Remove the blade, saving all mounting hardware.

5. Install the new blade and all mounting hardware.

Important: Position the curved ends of the blade to point toward the mower.

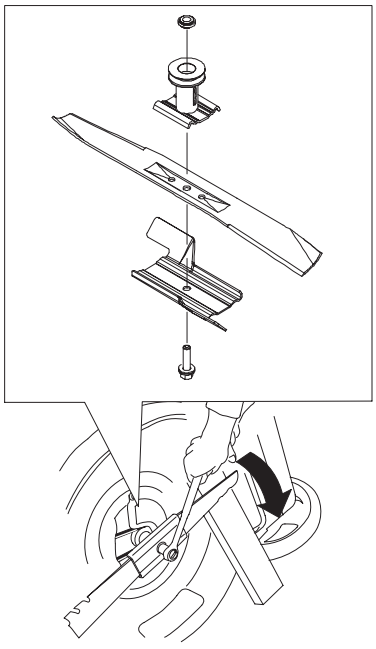

m-6216

6. **Use a torque wrench** to tighten the blade bolt to 60 ft-lb (82 N·m).

Important: **A bolt torqued to 60 ft-lb (82 N·m) is *very* tight. While holding the blade with a block of wood, put your weight behind the ratchet or wrench and tighten the bolt securely. This bolt is very difficult to overtighten.**

Cleaning the Mower

1. With the engine running on a flat paved surface, spray a stream of water in front of the **right rear** wheel.



1093

The water will splash into the path of the blade, cleaning out the clippings.

2. When no more clippings come out, stop the water and move the mower to a dry area.

3. Run the engine for a few minutes to dry the housing to prevent it from rusting.

Storage

Store the mower in a cool, clean, dry place.

Preparing the Mower into Storage

Gasoline vapors can explode.

- **Do not store gasoline more than 30 days.**
- **Do not store the mower in an enclosure near an open flame.**
- **Allow the engine to cool before storing it.**

1. On the last refueling of the year, add fuel stabilizer to the fuel as directed by the engine manufacturer.

2. Run the mower until the engine stops from running out of fuel.

3. Prime the engine and start it again.

4. Allow the engine to run until it stops. When you can no longer start the engine, it is sufficiently dry.

5. Remove the wire from the spark plug and connect the wire onto the retaining post.

6. Remove the spark plug, add 1 oz. (30 ml) of oil through the spark plug hole, and pull the starter rope **slowly** several times to distribute oil throughout the cylinder to prevent cylinder corrosion during the off-season.

7. Loosely install the spark plug.

8. Tighten all nuts, bolts, and screws.

Folding the Handle

You can fold the handle in two positions: vertical and fully folded.

Vertical Position

The blade is sharp; contacting the blade can result in serious personal injury.

Stop the engine and wait for all moving parts to stop before leaving the operating position.

1. Go to the left side of the lawn mower.

2. Step on the handle release lever.

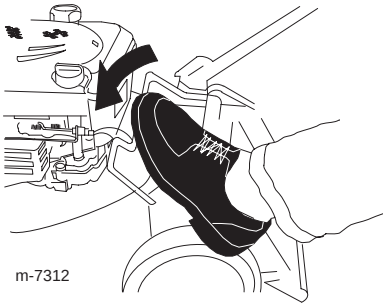

3. Raise the handle to the vertical position.

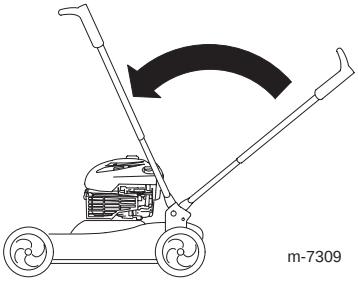

4. To unfold the handle, simply return the handle to the operating position.

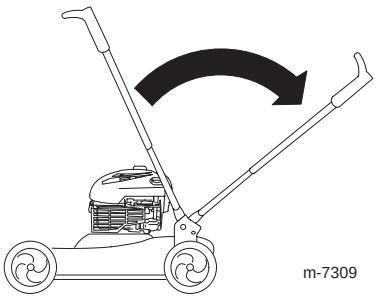

Fully Folded Position

The blade is sharp; contacting the blade can result in serious personal injury.

Stop the engine and wait for all moving parts to stop before leaving the operating position.

1. Go to the left side of the lawn mower.

2. Step on the handle release lever.

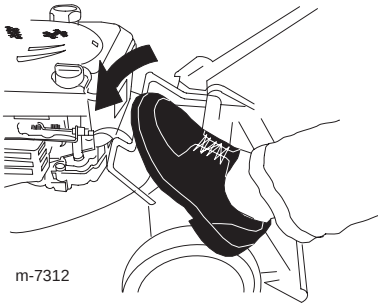

3. Raise the handle to the vertical position.

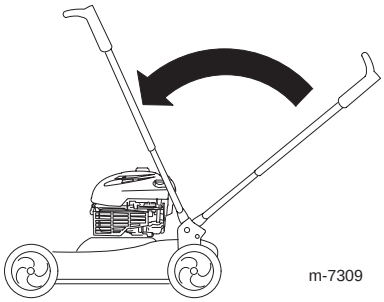

4. Push in on the lower left handle leg until the the handle moves freely forward.

5. Rotate the handle forward.

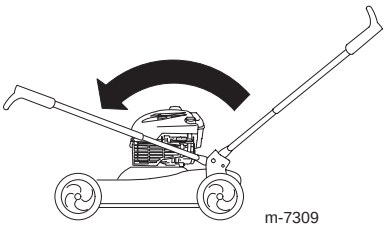

Folding or unfolding the handle improperly can damage the cables, causing an unsafe operating condition.

- **Do not damage the cables when folding or unfolding the handle.**
- **If a cable is damaged, contact an Authorized Service Dealer.**

6. Loosen the handle knobs until you can move the upper handle freely.

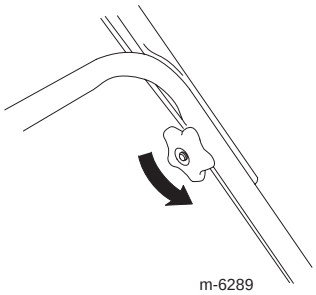

7. Fold the upper handle rearward as shown.

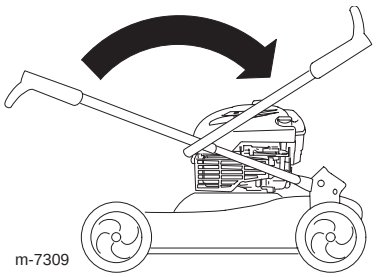

Important: Route the cables to the outside of the handle knobs as you unfold the upper handle.

8. To unfold the handle, refer to Unfolding the Handle on page 4.

Removing the Mower from Storage

1. Remove the spark plug and spin the engine rapidly using the starter to blow the excess oil from the cylinder.

2. Install the spark plug and tighten it with a torque wrench to 15 ft-lb (20 N·m).

3. Connect the wire to the spark plug.


TORO®