Form No. 3477-935 Rev B

Backup Alarm Kit

Groundsmaster® e3200 or e3300 Series Traction Unit

Model No. 31817

Installation Instructions

Installation

Loose Parts

Use the chart below to verify that all parts have been shipped.

Procedure	Description	Qty.	Use
1	No parts required	–	Prepare the machine.
2	Backup alarm Carriage bolt (5/16 x 3/4 inch) Flange nut (5/16 inch) Push fastener Cable tie Mount bracket Carriage bolt (1/4 x 3/4 inch) Flange nut (1/4 inch) Wire harness	1 2 2 1 1 1 2 2 1	Install the backup alarm.
3	No parts required	–	Check the backup alarm.

Important: **This kit can be installed to Groundsmaster e3200 machines only with a serial number of 417500000 and up.**

1

Preparing the Machine

No Parts Required

Procedure

1. Park the machine on a level surface.
2. Ensure that the parking brake is engaged.
3. Shut off the machine and remove the key.
4. Turn the battery-disconnect switch to the OFF position.

© 2025—The Toro® Company
8111 Lyndale Avenue South
Bloomington, MN 55420

Register at www.Toro.com.

Original Instructions (EN)
Printed in the USA
All Rights Reserved

3477-935

2

Installing the Backup Alarm

Parts needed for this procedure:

1	Backup alarm
2	Carriage bolt (5/16 x 3/4 inch)
2	Flange nut (5/16 inch)
1	Push fastener
1	Cable tie
1	Mount bracket
2	Carriage bolt (1/4 x 3/4 inch)
2	Flange nut (1/4 inch)
1	Wire harness

Procedure

1. Use 2 carriage bolts (1/4 x 3/4 inch) and 2 flange nuts (1/4 inch) to secure the alarm to the mount bracket (Figure 1).

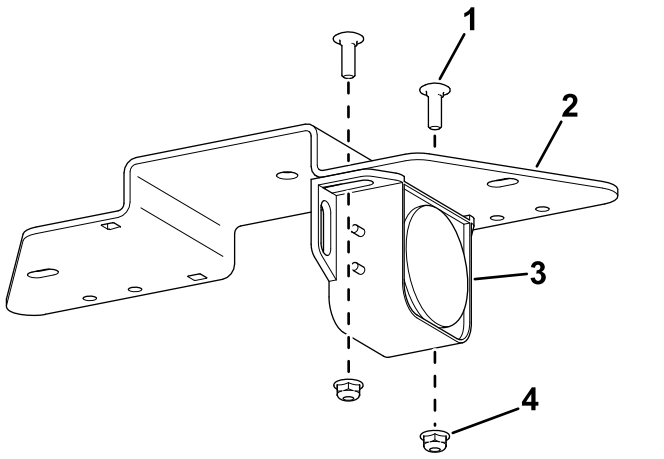

Figure 1

1. Carriage bolt (1/4 x 3/4 inch)
2. Mount bracket
3. Alarm
4. Flange nut (1/4 inch)

2. Use the existing nuts on the alarm to secure the wire-harness ring terminals to the alarm (Figure 2).

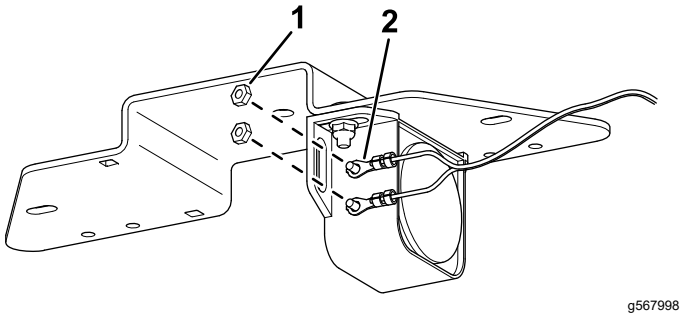

Figure 2

1. Nut
2. Ring terminal

3. Use 2 carriage bolts (5/16 x 3/4 inch) and 2 flange nuts (5/16 inch) to secure the mount bracket to the traction-unit frame (Figure 3).

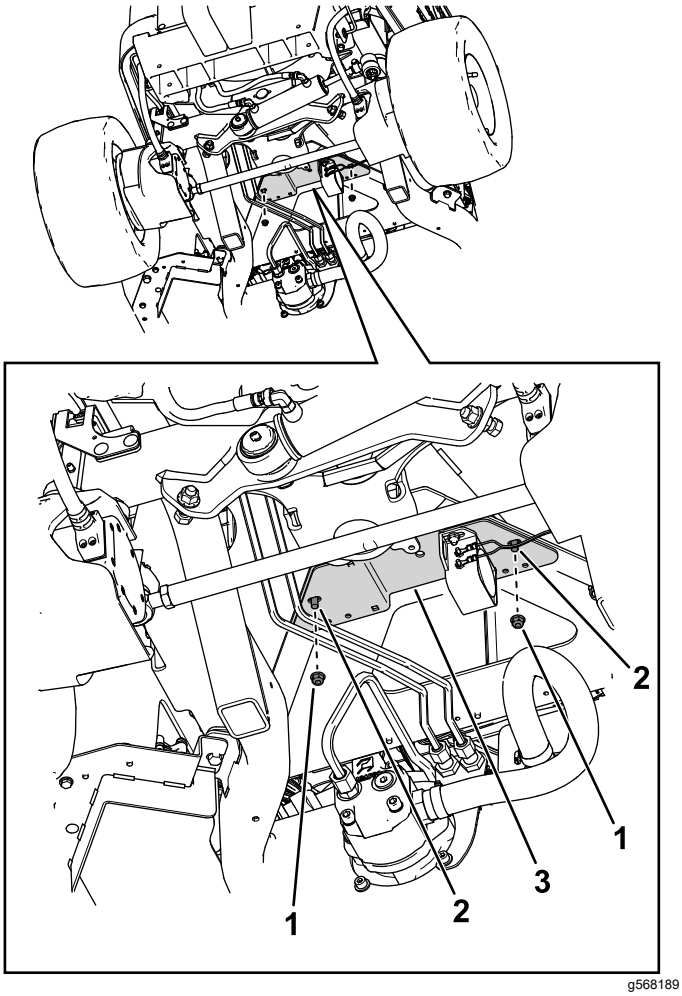

Figure 3

1. Nut
2. Bolt
3. Mount bracket

4. Use a cable tie and a push fastener to secure the wire harness to the machine frame (Figure 4).

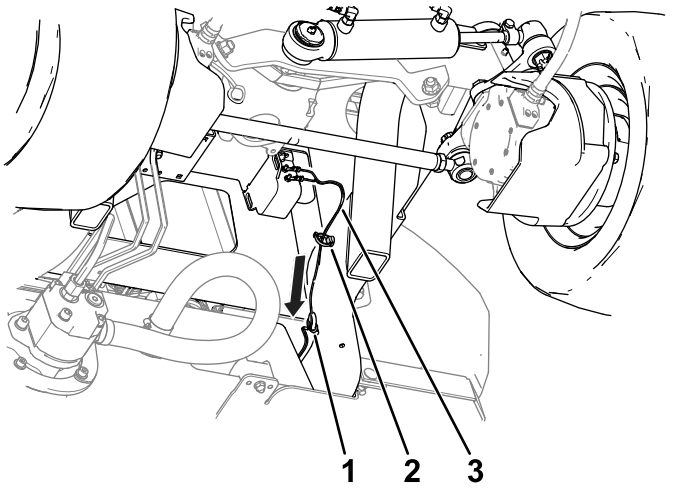

g568192

Figure 4

1. Cable tie
2. Push fastener
3. Wire harness

5. Raise the hood and route the wire-harness leg (Figure 5) toward the connectors above the hydraulic-tank cap and connect it to the machine wire-harness connector labeled DRIVING LIGHT KIT POWER.

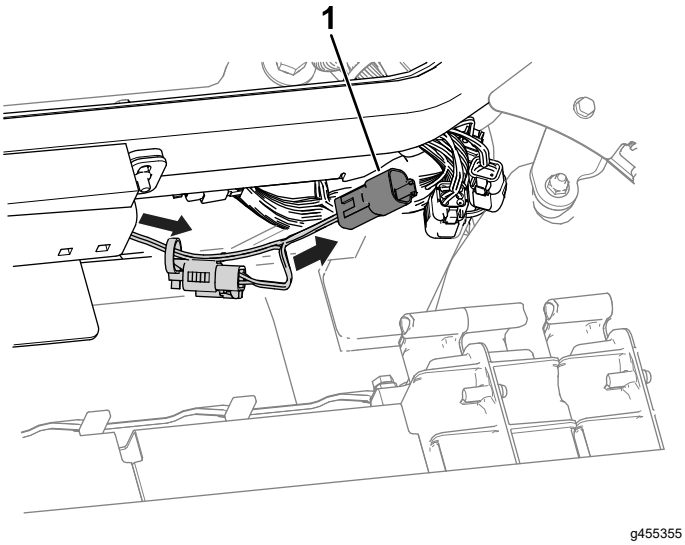

g455355

Figure 5

1. Wire-harness leg

3

Checking the Backup Alarm

No Parts Required

Procedure

Perform the following steps to ensure that the backup alarm is working.

1. Turn the battery-disconnect switch to the ON position.
2. Sit in the operator's seat, fasten the seat belt, turn on the machine, and press the bottom of the traction pedal to move the traction unit in reverse.
3. Listen for the alarm sound.



Count on it.