Form No. 3463-913 Rev B

GeoLink® Precision Spray System Finishing Kit

Serial Number 315000001 and After Multi Pro® 1750 Turf Sprayer

Model No. 41742—Serial No. 400000000 and Up

Installation Instructions

Note: This kit is to be installed along with Model 41712 or Model 41713

Introduction

The GeoLink spray system kit is an attachment for a Toro Multi Pro turf spray application vehicle and is intended to be used by professional, hired operators in commercial applications. It is designed primarily for spraying on well-maintained lawns in parks, golf courses, sports fields, and on commercial grounds. Using this product for purposes other than its intended use could prove dangerous to you and bystanders.

Read this information carefully to learn how to operate and maintain your product properly and to avoid injury and product damage. You are responsible for operating the product properly and safely.

Visit www.Toro.com for product safety and operation training materials, accessory information, help finding a dealer, or to register your product.

Whenever you need service, genuine Toro parts, or additional information, contact an Authorized Service Dealer or Toro Customer Service and have the model and serial numbers of your product ready. Figure 1 identifies the location of the model and serial numbers on the product. Write the numbers in the space provided.

Important: **With your mobile device, you can scan the QR code (if equipped) on the serial number plate to access warranty, parts, and other product information.**

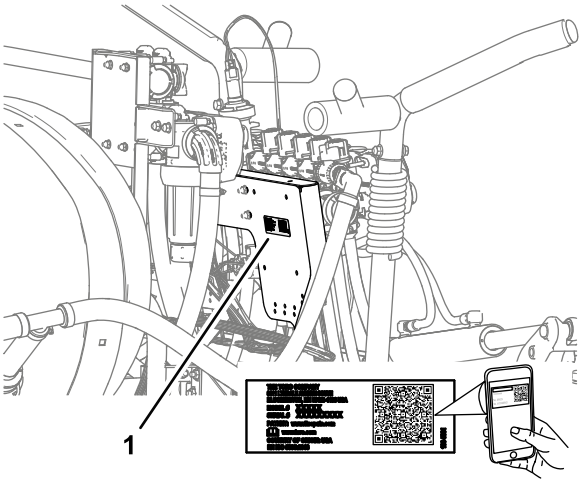

g281138

Figure 1

1. Model and serial number location

Model No. _____

Serial No. _____

This manual identifies potential hazards and has safety messages identified by the safety-alert symbol (Figure 2), which signals a hazard that may cause serious injury or death if you do not follow the recommended precautions.



g000502

Figure 2

1. Safety-alert symbol

This manual uses 2 words to highlight information. **Important** calls attention to special mechanical information and **Note** emphasizes general information worthy of special attention.

© 2025—The Toro® Company
8111 Lyndale Avenue South
Bloomington, MN 55420

Register at www.Toro.com.

Original Instructions (EN)
Printed in the USA
All Rights Reserved

3463-913

Contents

Introduction 1
Safety 3
Safety and Instructional Decals 3
Setup 5
1 Preparing the Machine 9
2 Removing the Seat and the Engine-Access Panel 9
3 Removing the Front Fenders and the Hood 11
4 Disconnecting the Pressure-Sense Tube for the Dash Gauge 14
5 Disconnecting the Boom Valve Connectors 14
6 Removing the Boom Sections 15
7 Installing the Center-Boom Extension 18
8 Installing the Turrets to the Center-Boom Section 21
9 Removing the Boom-Section Valves 23
10 Installing the Flow Meter Support Clamps 26
11 Assembling the Rear Harness to the Machine 28
12 Assembling the Flow-Meter Manifold 34
13 Installing the Bypass Hoses to the Tank 34
14 Installing the Modified Center-Boom Section 35
15 Assembling the Lift Cylinder Manifold to the Cylinder Mount 35
16 Installing the Valve Mount, Rate/Section Controller, and Section Valves 36
17 Connecting the Rear Harness at the Back of the Machine 40
18 Assembling the Boom-Lift Cylinders 41
19 Installing the Outer-Boom Sections 43
20 Installing the Hoses 46
21 Connecting the Pressure-Sense Tube for the Dash Gauge 50
22 Installing the Navigation Receiver 51
23 Installing the Modem Antennas to the Machine 53
24 Installing the Wire Harnesses for the Navigation Components 55
25 Installing the Display 57
26 Connecting the Data Cable to the Display 59
27 Assembling the Modem Data Harness to the Machine 59
28 Assembling the Modem Power Harness to the Machine 61
29 Installing the CL-55 Modem 62
30 Removing the Passive Resistor from the Machine Wire Harness 65
31 Installing the ISO-CAN Bus Harness 65
32 Installing the Adapter Harness and Terminating Resistor 68
33 Wiring the Spray Pump Clutch 68
34 Installing Components for the Electrical System 69
35 Connecting the Harness at the Seat Base 75
36 Installing the Navigation-Data and Electrical Harness 78
37 Removing the Rate-Control Switch 81
38 Installing the Hood and the Front Fenders 82
39 Installing the Engine-Access Panel and the Seat 85
40 Programming the Machine Settings 87
41 Powering the GeoLink Components 89
42 Completing the Software Setup 90

Safety

⚠ WARNING

Chemical substances used in the spray system may be hazardous and toxic to you, bystanders, animals, plants, soil, or other property.

- **Carefully read and follow the chemical warning labels and safety data sheet (SDS) for all chemicals used and protect yourself according to the chemical manufacturer's recommendations. For example, use appropriate personal protective equipment (PPE), including face and eye protection, gloves, or other equipment to guard against personal contact with a chemical.**
- **There may be more than 1 chemical used and information on each chemical; assess each chemical.**
- **Refuse to operate or work on the sprayer if this information is not available.**
- **Before working on a spray system, ensure that the system has been triple rinsed and neutralized according to the recommendations of the chemical manufacturer(s) and that all the valves are cycled 3 times.**
- **Verify that there is an adequate supply of clean water and soap nearby, and immediately wash off any chemicals that contact you.**

Safety and Instructional Decals

Safety decals and instructions are easily visible to the operator and are located near any area of potential danger. Replace any decal that is damaged or missing.

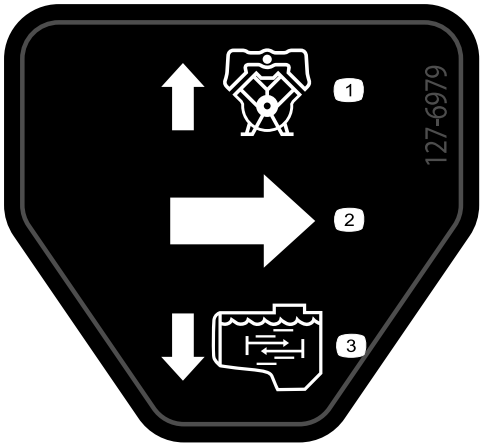

decal127-6979

127-6979

1. Bypass-return flow
2. Flow
3. Agitation flow

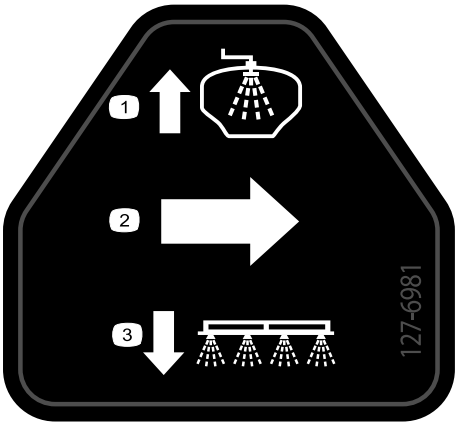

decal127-6981

127-6981

1. Bypass-return flow
2. Flow
3. Boom spray

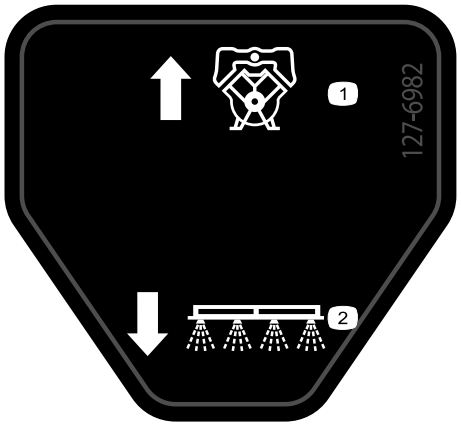

decal127-6982

127-6982

1. Bypass-return flow
2. Boom spray



decal127-6976

127-6976

1. Decrease
2. Increase

Installation

Loose Parts

Use the chart below to verify that all parts have been shipped.

Procedure	Description	Qty.	Use
1	No parts required	–	Prepare the machine.
2	No parts required	–	Remove the seat and the engine access panel.
3	No parts required	–	Remove the front fenders and the hood.
4	No parts required	–	Disconnect the pressure-sense tube for the dash gauge.
5	No parts required	–	Disconnect the boom valve connectors.
6	No parts required	–	Remove the boom sections.
7	Flange-head bolt (3/8 x 1 inch) Flange locknuts (3/8 inch) Center-boom extension Cylinder mount (wide) Tie plate (wide) Carriage bolt (1/2 x 1-1/4 inches) Flange locknut (1/2 inch)	2 2 1 1 1 4 4	Install the center boom extension.
8	Turret Hose assembly (valve 5 or 6) Flange locknut (5/16 inch)	2 2 2	Install the mount brackets and turrets to the center-boom section.
9	Cap (quick coupler) Retainer	3 3	Remove the boom-section valves.
10	Flow meter mount Support-clamp half Bolt (1/4 x 4-1/2 inches) Flange locknuts (1/4 inch)	1 4 4 4	Installing the flow meter support clamps.
11	Rear harness	1	Assemble the rear harness to the machine.
12	Straight hose barb (1 x 2 inches) Hose clamp (3/4 to 1-1/2 inches) Hose (1 x 5-3/4 inches) Manifold Hose (1 x 16 inches)	1 3 1 1 1	Assemble the flow meter manifold.
13	Bypass hose assembly Shutoff valve	1 1	Install the bypass hoses to the tank.
14	No parts required	–	Install the modified center-boom section.
15	No parts required	–	Assembling the lift cylinder manifold to the cylinder mount.

Procedure	Description	Qty.	Use
16	Valve mount and valve assembly	1	Install the valve mount, controller, and section valves.
	Rate/Section controller	1	
	Magnet	4	
	Bolt (#8)	4	
	Flat washer	4	
	Locknut (#8)	4	
	Cap (quick-disconnect fitting)	2	
	Flange-head bolts (5/16 x 3/4 inch)	8	
	Flange locknuts (5/16 inch)	8	
	Hose clamp	1	
	Push-in fastener (cable tie)	1	
	Push-in fastener (connector anchor)	3	
17	No parts required	–	Connect the rear harness at the back of the machine.
18	Hydraulic hose (1/4 x 24-3/4 inches)	4	Assemble the boom-lift cylinders.
19	Nylon-flange bushing	4	Install the outer-boom sections.
	Supply-hose assembly 188 cm (74 inches)	1	
	Supply-hose assembly 234 cm (92 inches)	1	
	Supply-hose assembly 279 cm (110 inches)	1	
20	Supply hose 279 cm (110 inches)	2	Install the hoses.
	Supply hose 234 cm (92 inches)	2	
	Supply hose 188 cm (74 inches)	4	
	Supply hose 81 cm (32 inches)	2	
21	No parts required	–	Connect the pressure-sense tube for the dash gauge.
22	Navigation-receiver plate	1	Install the navigation receiver.
	Receiver mount	1	
	Bolt (3/8 x 3-1/4 inches)	1	
	Lock washer (3/8 inch)	1	
	Washer (3/8 x 13/16 inch)	1	
	Spacer (3/8 x 1 inch)	1	
	Flange locknut (3/8 inch)	1	
	Flange-head bolt (5/16 x 3/4 inch)	1	
	Flange locknut (5/16 inch)	1	
	Flange-head bolt (3/8 x 1-1/2 inches)	2	
	Spacer (3/8 x 7/16 inch)	2	
	Navigation receiver	1	
	Modem antenna bracket	1	
	Hex-head bolt (5 x 16 mm)	3	
	Washer (5 mm)	3	
23	Antenna mount	1	Install the modem antennas to the machine.
	Rivet	2	
	Magnet	2	
	Modem antenna	1	
	High gain antenna	1	

Procedure	Description	Qty.	Use
24	Harness adapter Data and electrical harness Cable tie	1 1 8	Install the wire harnesses for the navigation components.
25	Display mount Flange-head bolt (6 x 12 mm) U-bolt (5/16 inch) Flange-head bolt (5/16 x 3/4 inch) Flange locknut (5/16 inch) Ball mount Display Arm	1 3 2 4 8 1 1	Install the display.
26	No parts required	–	Connect the wire harnesses to the display.
27	Modem data harness—300 cm (118 inches)	1	Assembling the modem data harness to the machine
28	Modem power harness	1	Assembling the modem power harness to the machine.
29	CL-55 modem Modem bracket Bolt (#10-24 x 1-3/8 inches) Locknut (#10-24 inch) Magnet Rivet	1 1 2 2 2 2	Install the CL-55 modem
30	No parts required	–	Remove the passive resistor from the machine wire harness.
31	ISO-CAN bus harness—302 cm (119 inches)	1	Route the ISO-CAN bus harness.
32	Adapter harness—13 cm (5 inches)	1	Install the adapter harness and terminating resistor.
33	No parts required	–	Wire the spray pump clutch.
34	Battery bracket Bumper Flange-locknut (1/4 inch) Strap Battery (650 A) Alternator bracket Drive pulley 279 mm (11 inch) Bolt (1/4 x 2-1/4 inches) Alternator (60 A) Flange-head bolt (8 x 25 mm) Flange-head bolt (3/8 x 1-1/2 inches) V-belt	1 1 2 1 1 1 1 4 1 1 1 1	Install the electrical system.
35	Alternator cable (red—6 gauge) Relay Push-in fastener Fuse (15 A)	1 1 1 1	Connect the harness at the seat base.
36	Quick-connect clamp (red handle) Quick-connect clamp (black handle)	1 1	Install the wire harnesses for the navigation components.

Procedure	Description	Qty.	Use
37	Switch plug	1	Remove the rate-control switch.
38	Push-in fastener	13	Install the hood and the left and right front fenders.
39	No parts required	–	Install the engine-access panel and the seat.
40	No parts required	–	Program the machine settings.
41	No parts required	–	Power the GeoLink components.
42	No parts required	–	Complete the software setup.

1

Preparing the Machine

No Parts Required

Procedure

Refer to the *Operator's Manual* for your machine.

1. Park the machine on a level surface and engage the parking brake.
2. Extend the left and right boom sections to the horizontal position.
3. Shut off the engine, remove the key, and disconnect the battery.
4. Clean the sprayer.

   Important: **You must completely empty the spray tank before installing the GeoLink Spray System Finishing Kit.**

2

Removing the Seat and the Engine-Access Panel

No Parts Required

Removing the Seat

1. Remove the 2-socket connector of the machine wire harness that connects to the seat-switch connector.

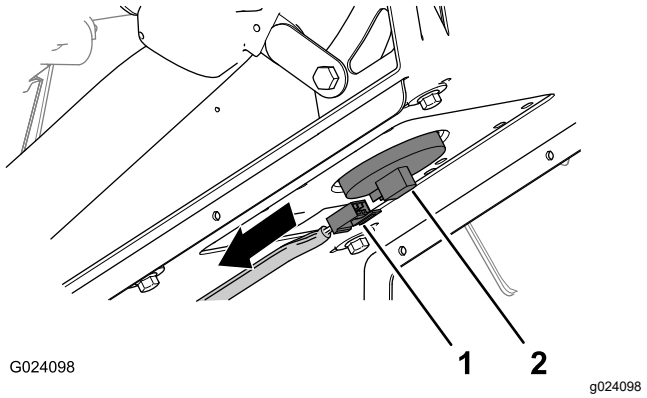

Figure 3

1. 2-socket connector (machine wire harness)
2. Seat-switch connector

2. Remove the hairpin that secures the prop rod to the bracket at the bottom of the seat plate.

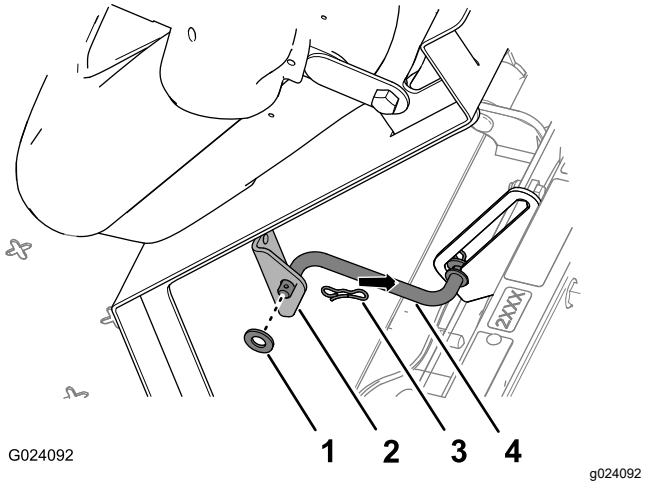

Figure 4

1. Washer
2. Bracket (seat)
3. Hairpin
4. Prop rod

3. Remove the 2 hairpins that secure the pivot fitting of the seat plate to the chassis brackets.

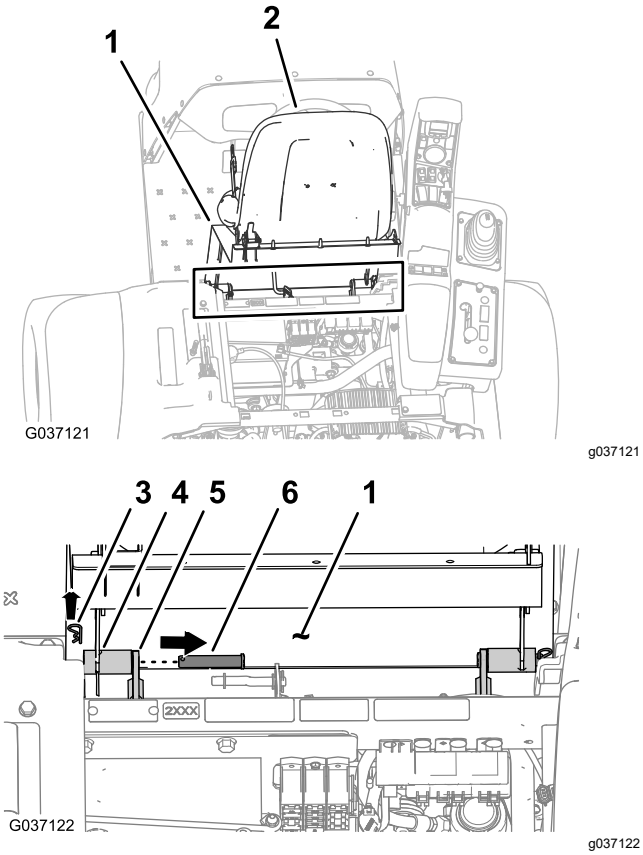

Figure 5

1. Seat plate
2. Seat
3. Hairpin
4. Pivot fitting (seat pan)
5. Chassis bracket
6. Pivot pin

4. Remove the 2 pivot pins that secure the seat and seat plate to the chassis.
5. Lift the seat and seat plate up and out of the machine.

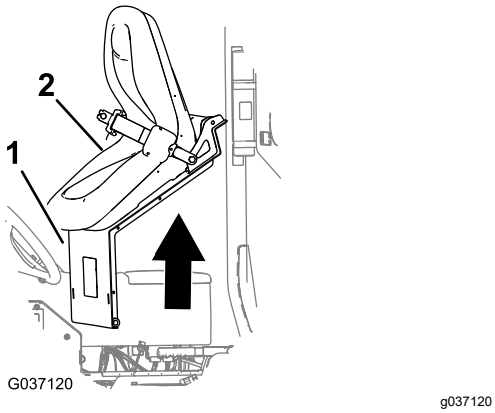

Figure 6

1. Seat plate
2. Seat

Removing the Engine-Access Panel

1. Rotate up the handles for the latches of the engine-access panel.

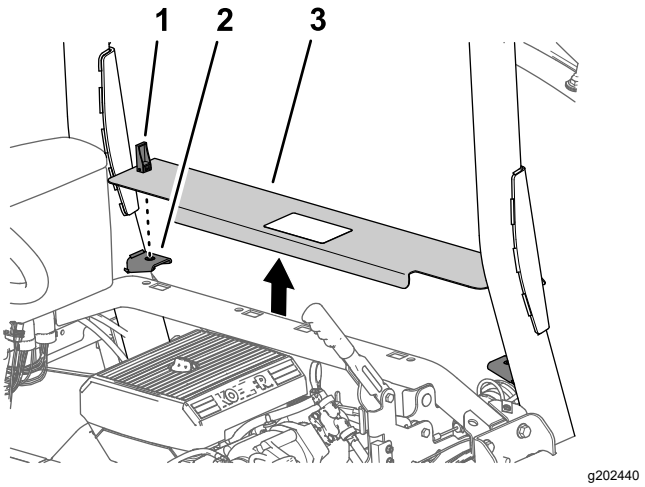

Figure 7

1. Latch
2. Panel-support bracket
3. Engine access panel

2. Lift the engine-access panel and remove it from the machine.

3

Removing the Front Fenders and the Hood

No Parts Required

Removing the Left Front Fender

1. Remove and discard the 2 push-in fasteners that secure the left, front fender to the lower ROPS channel.

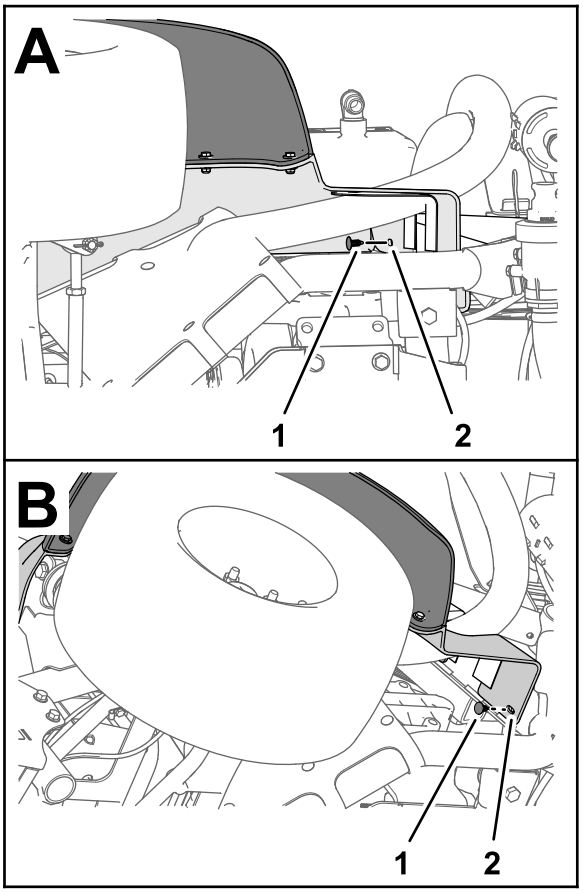

g264614

Figure 8

1. Push-in fastener
2. Left, front fender

2. Remove the 3 bolts (5/16 x 1 inch) and 3 washers (5/16 inch) that secure the fender to the frame of the machine.

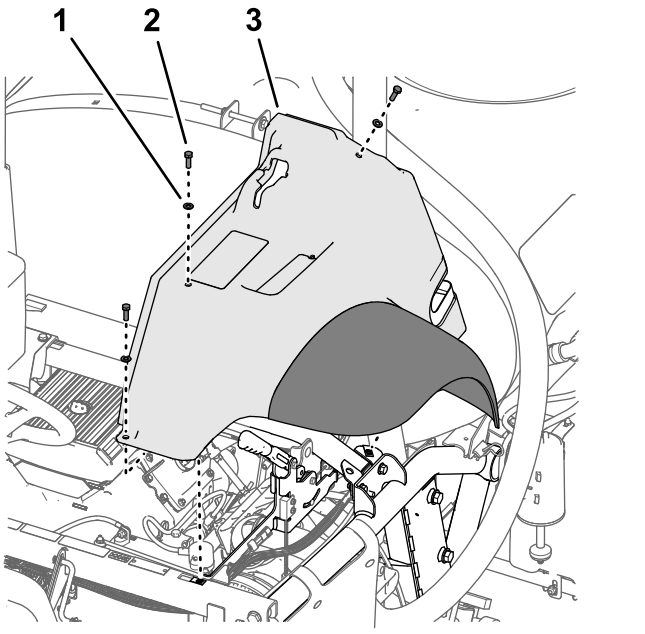

g197152

Figure 9

1. Washer (5/16 inch)
2. Bolt (5/16 x 1 inch)
3. Left, front fender

3. Remove the fender from the machine.
4. Remove the 6 push-in fasteners and 5 washers (9/16 x 1/2 inch) that secure the inner-fender shroud to the frame of the machine.

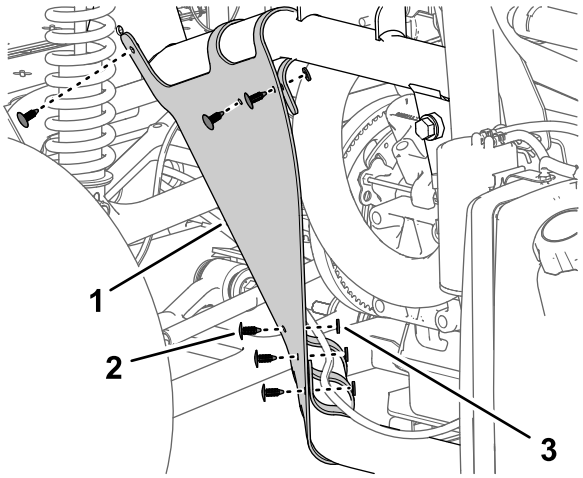

g197150

Figure 10

1. Inner-fender shroud
2. Push-in fastener
3. Washer (9/16 x 1/2 inch)

5. Remove the inner-fender shroud from the machine.

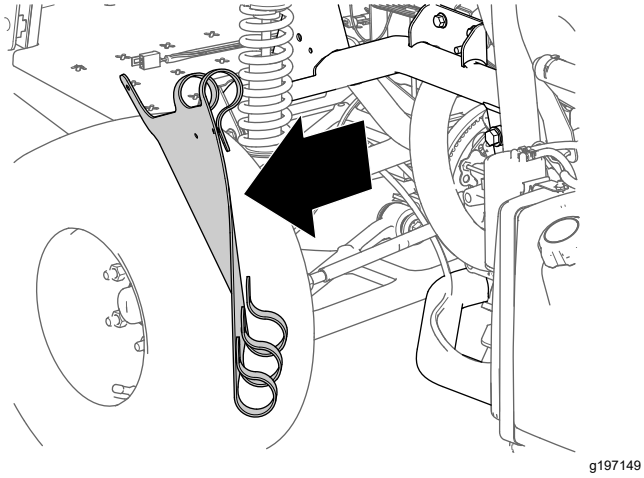

g197149

Figure 11

6. Repeat steps 1 through 5 for the fender and inner-fender shroud at the other side of the machine.

Removing the Right Front Fender

Note: If you damage the push-in fasteners removing them, replace the fasteners with Toro Part No. 117-2382.

1. Remove the 2 capscrews (5/16 x 1 inch) and 2 washers (5/16 inch) that secure the bottom console cover and end console cover to the machine, and remove the covers.

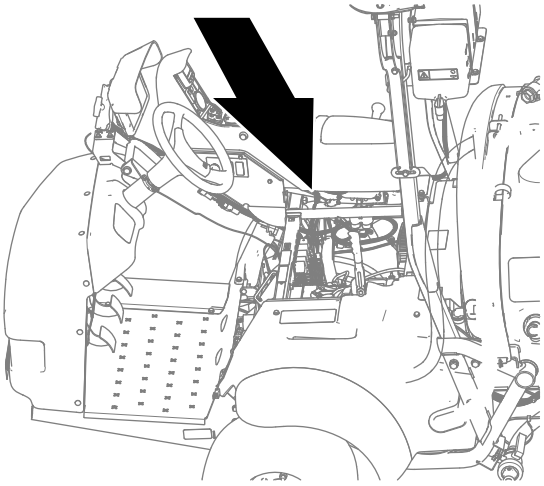

g323170

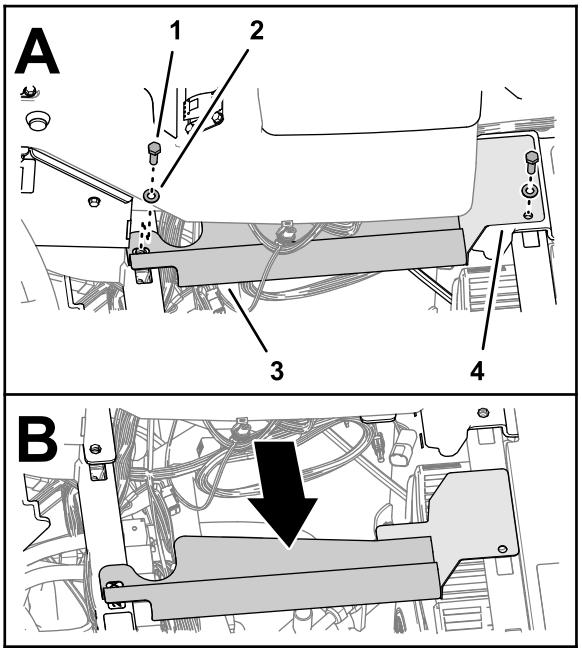

g323167

Figure 12

1. Capscrew (5/16 x 1 inch)
2. Washer (5/16 inch)
3. Console cover (bottom)
4. Console cover (end)

2. Remove the capscrew (5/16 x 1 inch) and washer (5/16 inch) that secures the right, front fender to the platform floor.

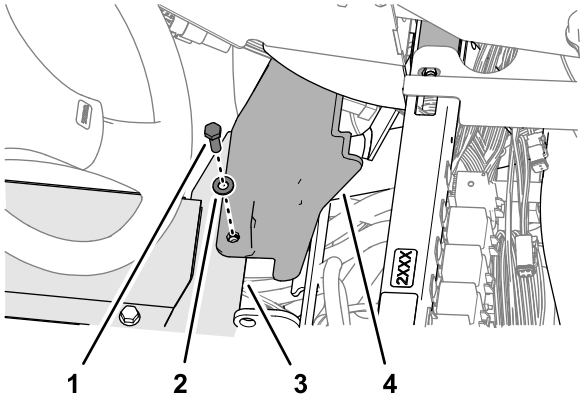

g323165

Figure 13

1. Capscrew (5/16 x 1 inch)
2. Washer (5/16 inch)
3. Platform floor
4. Right, front fender

3. Carefully remove the 2 push-in fasteners that secure the right, front fender to the roll bar mounting channel.

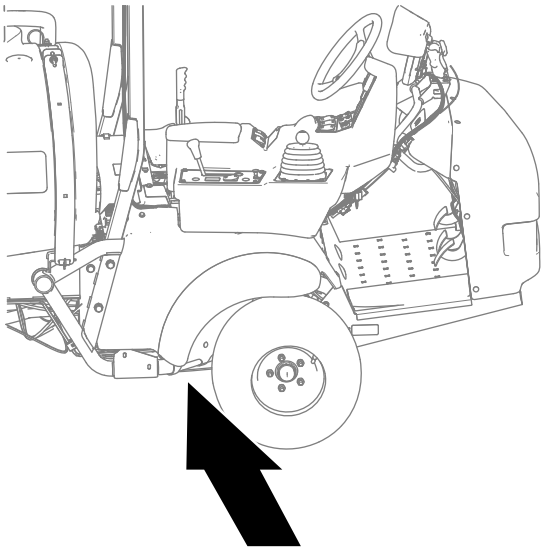

g323169

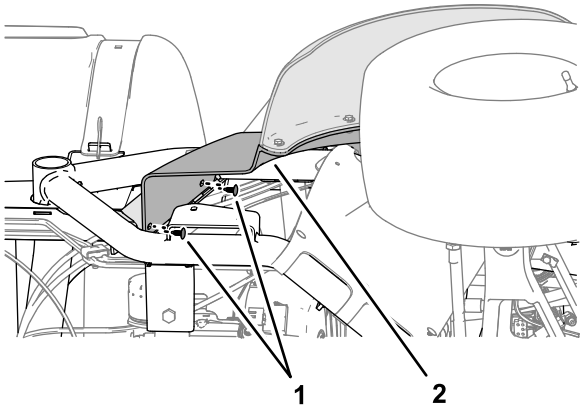

g323166

Figure 14

1. Push-in fastener
2. Right, front fender

4. Remove the capscrew (5/16 x 1 inch) and washer (5/16 inch) that secures the right, front fender to the cross-member support.

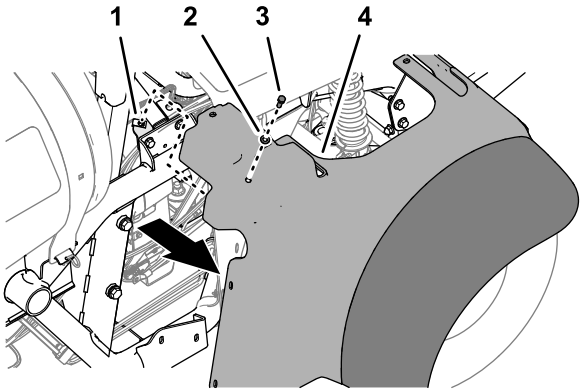

g323168

Figure 15

1. Clip nut (cross-member support)
2. Washer (5/16 inch)
3. Capscrew (5/16 x 1 inch)
4. Right, front fender

5. Remove the right, front fender from the machine.
6. Remove the 6 push-in fasteners and 5 washers (9/16 x 1/2 inch) that secure the inner-fender shroud to the right, upper and right, lower-frame tubes.

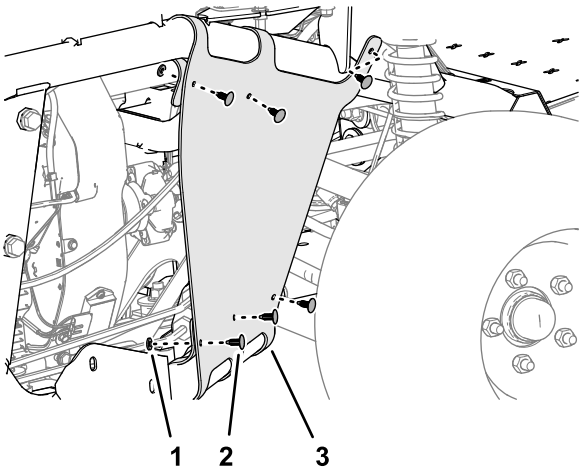

g323162

Figure 16

1. Washer (9/16 x 1/2 inch)
2. Push-in fastener
3. Inner-fender shroud

7. Remove the inner-fender shroud from the machine.

   Note: Retain the right, front fender, inner-fender shroud, capscrews, washers, and undamaged push-in fasteners.

   Replace damaged push-in fasteners with Toro Part No. 117-2382.

Removing the Hood

1. Disconnect the 2 electrical connectors (2-socket) of the machine wire harness from the 2-pin connectors of the left and right headlights.

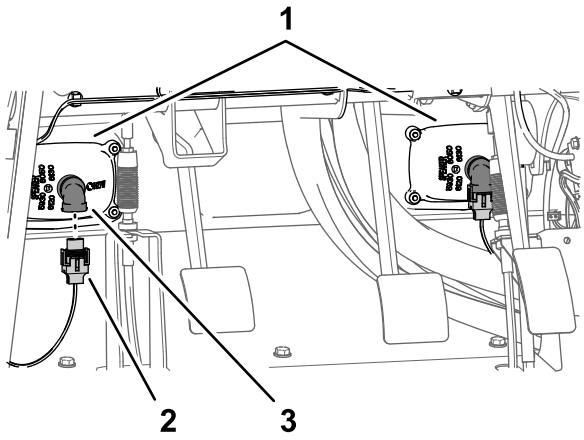

g197153

Figure 17

1. Headlights
2. 2-socket connector (machine wire harness)
3. 2-pin connector (headlight)

2. Remove and retain the 9 push-in fasteners that secure the hood to the dash and frame of the machine.

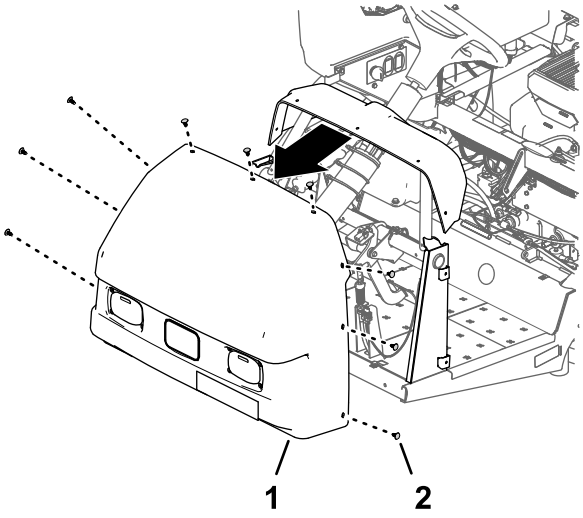

g197148

Figure 18

1. Hood
2. Push-in fastener

3. Remove and discard the hood from the machine.

4

Disconnecting the Pressure-Sense Tube for the Dash Gauge

No Parts Required

Procedure

1. Press in the collar for the tube coupler in the end cap of the right boom-section valve.

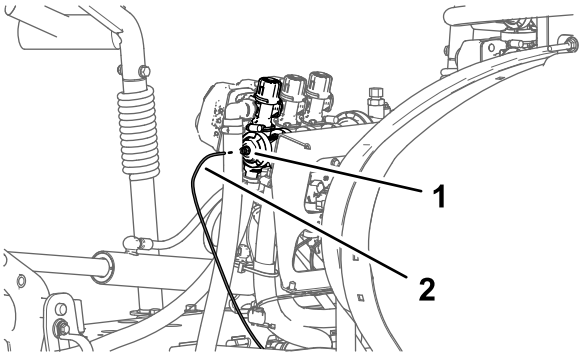

g197991

Figure 19

1. Tube coupler (end cap of the right boom-section valve)
2. Pressure-sense tube

2. Pull the pressure-sense tube for the dash gauge out of the tube coupler.

5

Disconnecting the Boom Valve Connectors

No Parts Required

Procedure

1. Disconnect the 3-socket connector labeled LEFT SPRAY VALVE, CENTER SPRAY VALVE, and RIGHT SPRAY VALVE of the machine wire harness from the 3-pin connectors of the 3 spray-valve actuators.

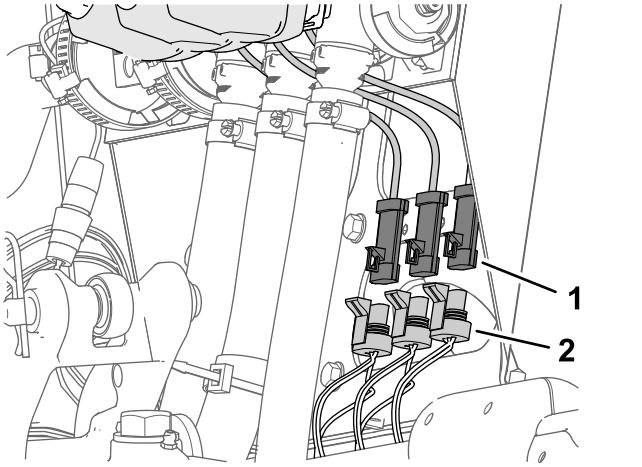

g198218

Figure 20

1. 3-pin connector (spray-valve actuator)
2. 3-socket connector—machine wire-harness (LEFT SPRAY VALVE, CENTER SPRAY VALVE, and RIGHT SPRAY VALVE)

2. Disconnect the 4-socket connector of the machine wire harness labeled RATE VALVE from the 4-pin connector of the rate-valve actuator.

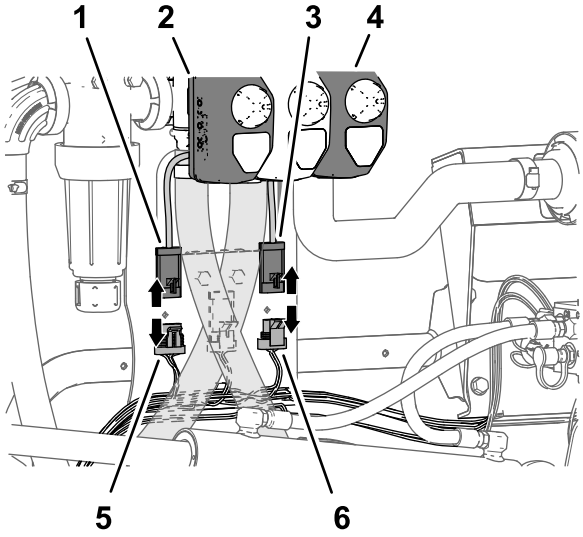

g198220

Figure 21

1. 4-pin connector (rate-valve actuator)
2. Actuator (rate valve)
3. 3-pin connector (master spray-valve actuator)
4. Actuator (master-spray valve)
5. 4-socket connector—machine wire harness (RATE VALVE)
6. 3-socket connector—machine wire harness (MASTER SPRAY VALVE)

3. Disconnect the 3-socket connector of the machine wire harness labeled MASTER SPRAY VALVE from the 3-pin connector of the master spray-valve actuator.

6

Removing the Boom Sections

No Parts Required

Removing the Boom Section Hoses

1. At the outer boom section, remove the hose clamp that secures the hose to the barbed T-fitting.

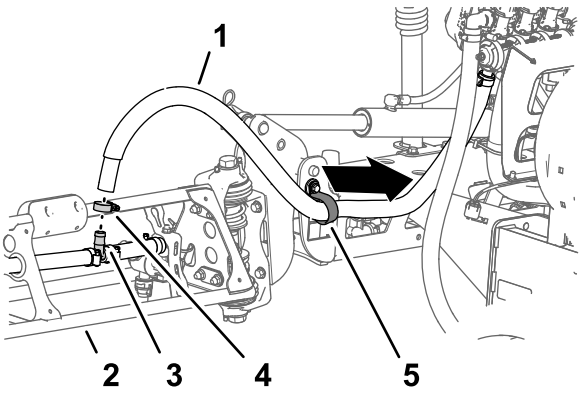

g198451

Figure 22

1. Hose (outer-boom section)
2. Outer-boom section
3. Barbed T-fitting
4. Hose clamp
5. R-clamp

2. Remove the hose from the T-fitting.
3. Remove the free end of the hose from the R-clamp.
4. Repeat steps 1 through 3 for the supply hose at the other outer-spray section.
5. Under the center-boom section, remove the hose clamp that secures the supply hose for the center-spray section to the barbed T-fitting.

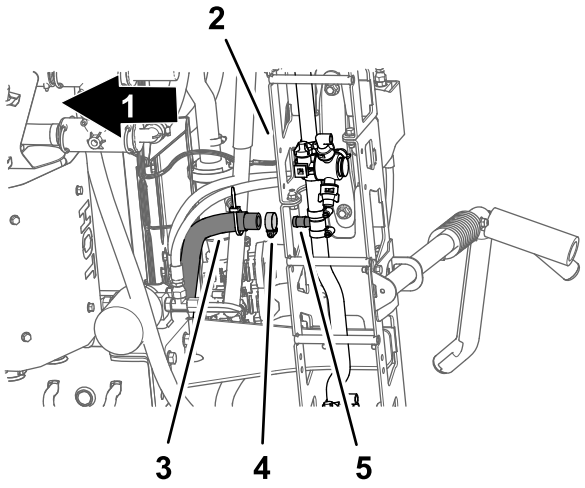

g198473

Figure 23

1. Front of the machine
2. Center-spray section
3. Supply hose (center-spray section)
4. Hose clamp
5. Barbed T-fitting

6. Remove and retain the retainers that secure the quick couplers of the left, center, and right supply hoses from the quick couplers if the section valves (Figure 24).

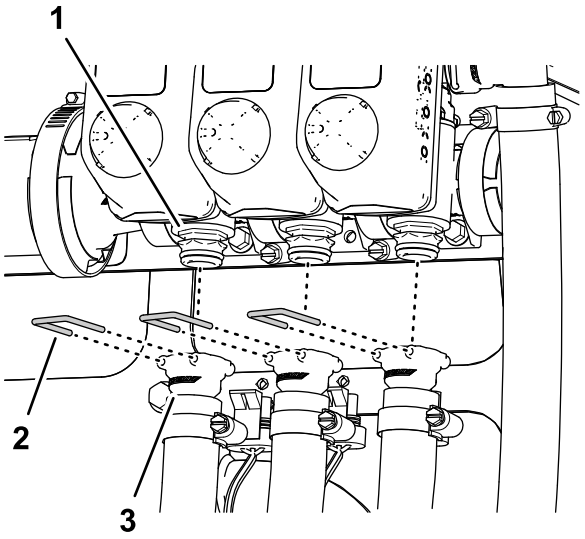

g198474

Figure 24

1. Quick coupler (section valve)
2. Retainer
3. Quick coupler (socket—supply hose)

7. Remove and discard the left, center, and right section-supply hoses from the quick couplers of the section valves, and remove the hoses from the machine.

Removing the Extend and Retract Hoses for the Lift Cylinder

1. Remove the hoses from the extend ports of the left and right lift cylinders.

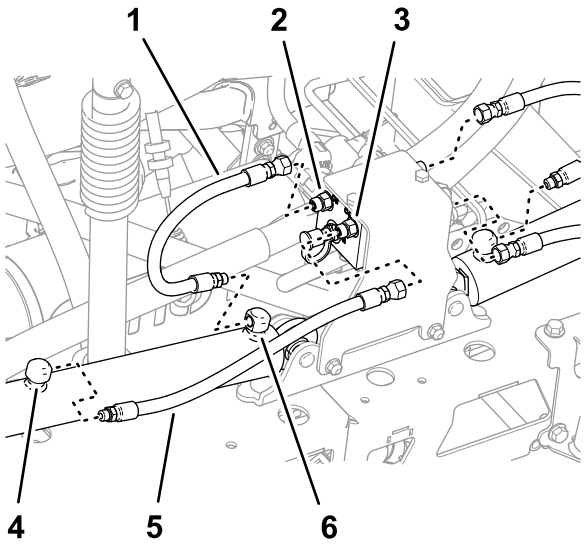

g198542

Figure 25

1. Hose (extend position)
2. Port C3 (lift-cylinder manifold)
3. Port C4 (lift-cylinder manifold)
4. Retract port (lift cylinder)
5. Hose (retract position)
6. Extend port (lift cylinder)

2. Remove and discard the hoses from the:
   - Ports C1, C2, C3, and C4 of the lift-cylinder manifold
   - Retract and extend ports of the left and right lift cylinder.

Removing the Lift Cylinders

Note: Except where noted, retain all hardware that you remove.

1. Use lifting equipment of the specified capacity to support the outer-spray section.
2. Remove the hairpin and clevis pin that secure the rod end of the lift cylinder to the pivot bracket.

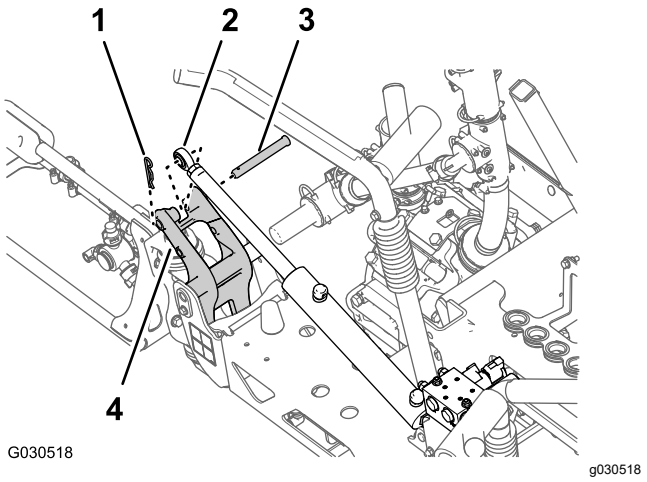

Figure 26

1. Hairpin
2. Rod fitting (lift cylinder)
3. Clevis pin
4. Pivot bracket

3. Remove the flange locknut (5/16 inch) and flange-head bolt (5/16 x 3/4 inch) that secures the pivot pin to the cylinder mount.

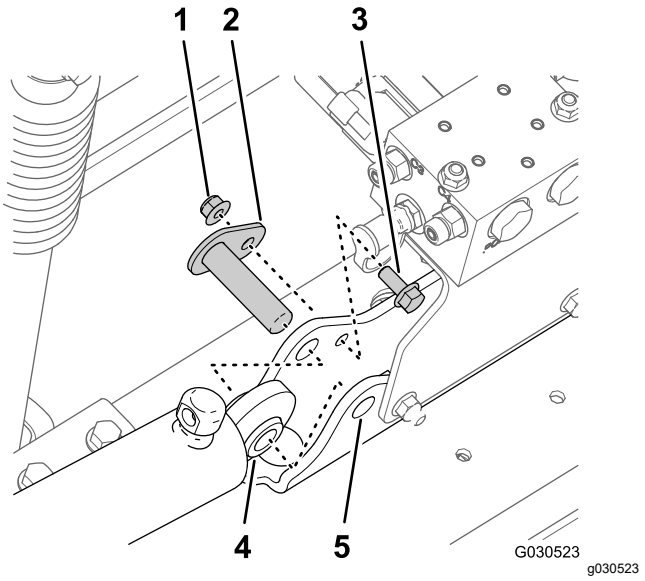

Figure 27

1. Flange locknut (5/16 inch)
2. Pivot pin
3. Flange-head bolt (5/16 x 3/4 inch)
4. Lift cylinder
5. Cylinder mount

4. Remove the pivot pin and the lift cylinder from the machine.

Removing the Outer-Boom Sections

Lift equipment capacity: 46 kg (100 lb)

⚠ WARNING

Lifting heavy machines and attachments improperly could result in serious injury or even death.

When lifting heavy machines and attachments, use lifting equipment, such as chains and straps, that is rated for the weight of the equipment.

Note: Except where noted, retain all hardware that you remove; you will use the hardware to install the center-boom extension.

1. Remove the flange bolt (5/16 x 1 inch) and flange locknut (5/16 inch) securing the pivot pin to the pivot bracket.

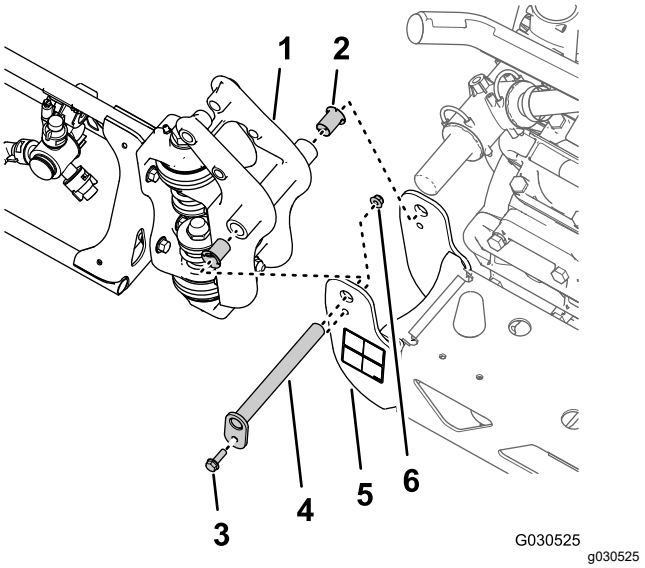

Figure 28

1. Pivot fitting (outer-boom section)
2. Nylon-flange bushing
3. Flange bolt (5/16 x 1 inch)
4. Pivot pin
5. Pivot bracket (center-boom section)
6. Flange locknut (5/16 inch)

2. Remove the pivot pin from the pivot bracket for the center-boom section and the pivot fitting for the outer-boom section.
3. Separate the outer-boom section from the center-spray section and remove outer section from the machine.
4. Remove and discard the 2 nylon-flange bushings from the pivot fitting of the outer-spray section.

5. Repeat steps 1 through 3 in Removing the Lift Cylinders for the outer-boom section at the other side of the machine.
6. Repeat steps 1 through 4 of this section for the outer-boom section at the other side of the machine.

Removing the Section-Lift Manifold from the Center-Boom Section

1. Remove the 2 flange locknuts (5/16 inch) and 2 flange-head bolts (5/16 x 1 inch) that secure the support bracket for the section-lift manifold to the cylinder mount, and separate the manifold and bracket from the cylinder mount.

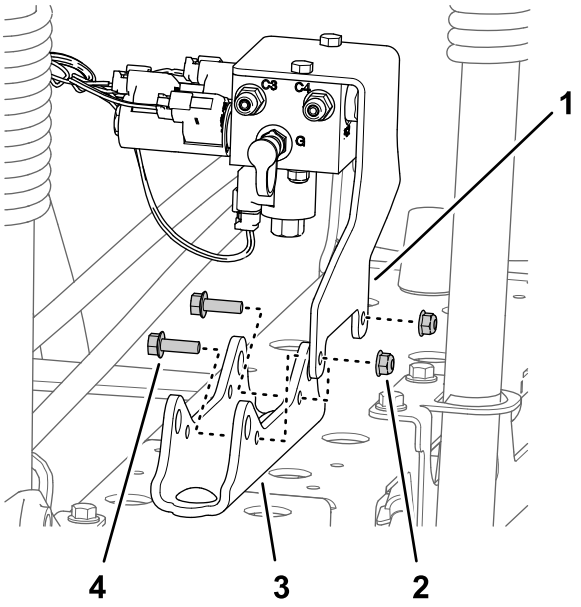

g198619

Figure 29

1. Support bracket (section-lift manifold)
2. Flange locknut (5/16 inch)
3. Cylinder mount
4. Flange-head bolt (5/16 x 1 inch)

2. Support the section-lift manifold by tying it to the valve mount bracket with a piece of rope.

Removing the Center-Boom Section

Lifting-equipment capacity: 41 kg (90 lb)

1. Support the center-boom section with lifting equipment with the specified capacity.

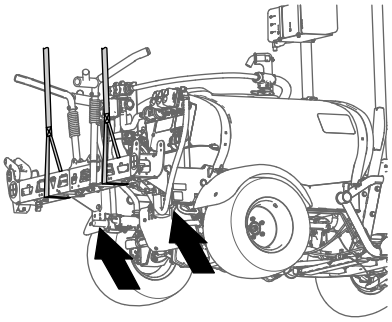

g198634

Figure 30

2. Remove and retain the 4 flange-head bolts (3/8 x 1-1/4 inches) and 4 flange locknuts (3/8 inch) that secure the center boom section to the support brackets.

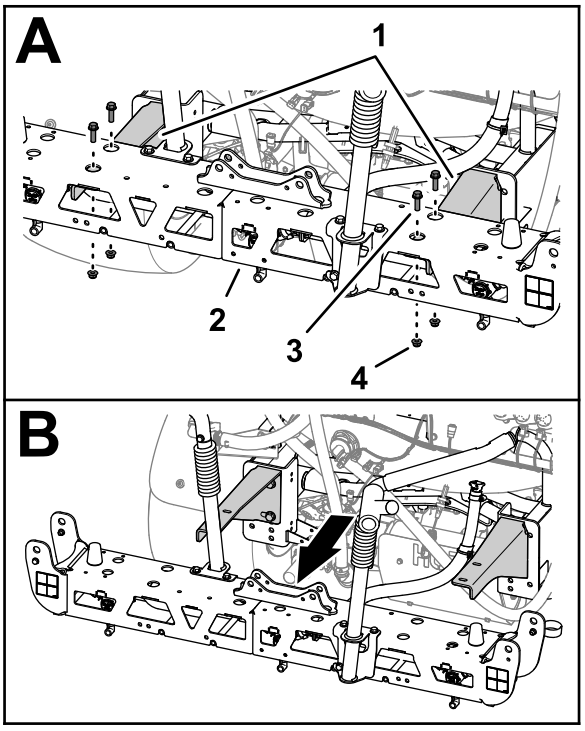

g330380

Figure 31

1. Support brackets
2. Center boom section
3. Flange-head bolt (3/8 x 1-1/4 inches)
4. Flange locknut (3/8 inch)

3. Lift the center boom section and remove it from the machine.

7

Installing the Center-Boom Extension

Parts needed for this procedure:

2	Flange-head bolt (3/8 x 1 inch)
2	Flange locknuts (3/8 inch)
1	Center-boom extension
1	Cylinder mount (wide)
1	Tie plate (wide)
4	Carriage bolt (1/2 x 1-1/4 inches)
4	Flange locknut (1/2 inch)

Removing the Turrets and Hoses

1. At the center-boom section, remove and retain the flanged locknut that secures the turret to the mount.

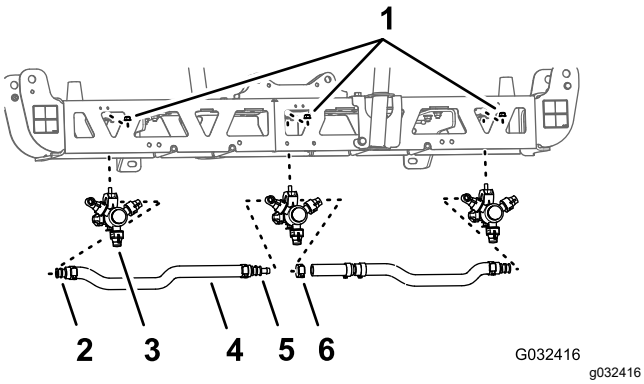

Figure 32

1. Flange locknut (5/16 inch)
2. Single barbed-hose shank (3/4 inch)
3. Sprayer nozzle on turret
4. Hose (3/4 inch inside diameter)
5. Double barbed-hose shank (3/4 inch)
6. Hose clamp

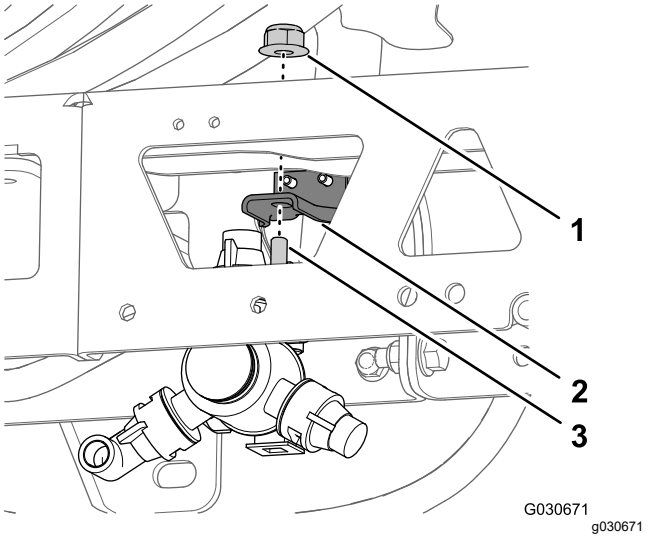

Figure 33

1. Flange locknut (5/16 inch)
2. Mount
3. Hex-head bolt (5/16 x 3/4 inch)

2. Remove the stainless steel screw (#12 x 1-1/4 inches) that secures the upper clamp half and double or single barbed-hose shank (3/4 inch) to the turret body, and separate the barbed-hose shank and hose from the nozzle.

   Note: The hex-head bolt (5/16 x 3/4 inch—stainless steel) will separate from the upper clamp half when you open the clamp, retain the bolt for installation.

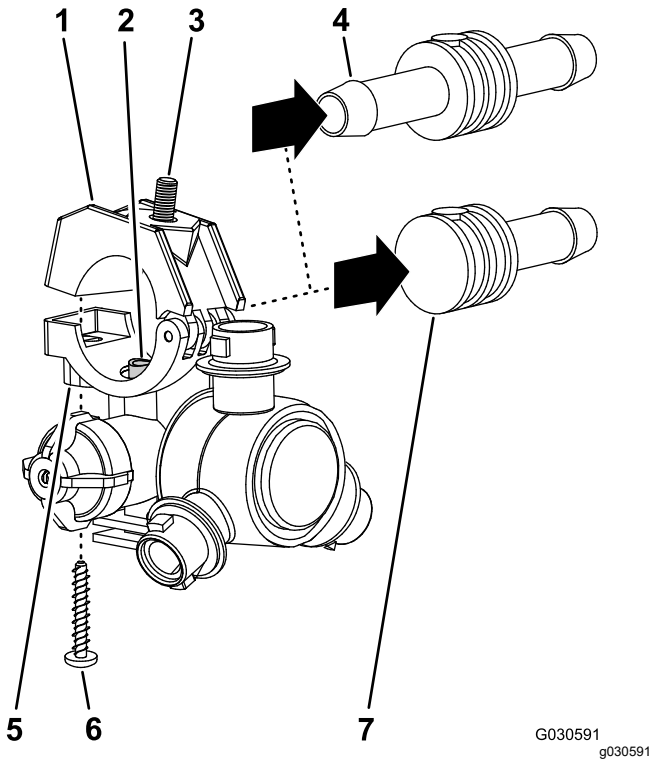

Figure 34

1. Upper clamp half
2. Transfer tube
3. Hex-head bolt (5/16 x 3/4 inch—stainless steel)
4. Double barbed-hose shank (3/4 inch)
5. Saddle on the turret
6. Stainless steel screw (#12 x 1-1/4 inches)
7. Single barbed-hose shank (3/4 inch)

3. Remove the turret from the center-boom section.
4. Repeat steps 1 and 2 for the other 2 turrets.
5. Remove the hoses (3/4 inch inside diameter), barbed-hose shanks, clamps and barbed T-fitting from the center-boom section.

   Note: You no longer need the hose, hose shanks, clamps, and T-fitting; retain all other parts.

Separating the Center-Boom Section Trusses

1. Remove the 2 flange head bolts (3/8 x 1 inch) and 2 locknuts (3/8 inch) that secure the vertical flanges of the left and right truss frames.

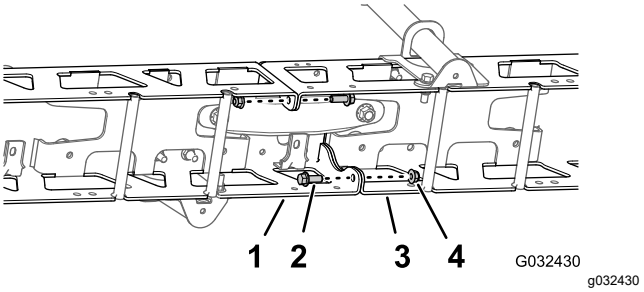

Figure 35

1. Left truss frame
2. Flange-head bolt (3/8 x 1 inch)
3. Right truss frame
4. Locknuts (3/8 inch)

2. Remove the 2 carriage bolts (1/2 x 1-1/4 inches) and 2 locknuts (1/2 inch) that secure the narrow cylinder mount, left and right truss frames, and narrow tie plate.

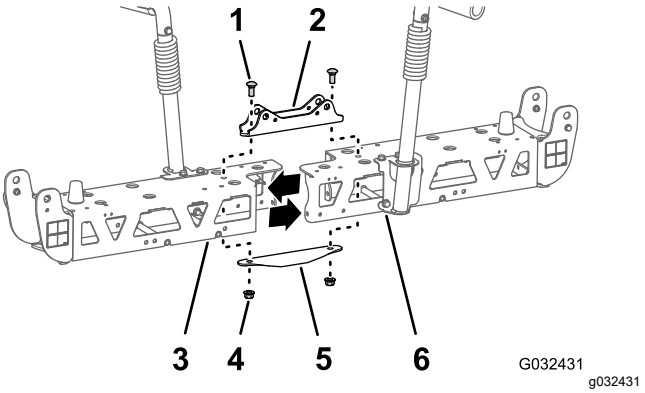

Figure 36

1. Carriage bolt (1/2 x 1-1/4 inches)
2. Cylinder mount (narrow)
3. Left truss frame
4. Locknuts (1/2 inch)
5. Tie plate (narrow)
6. Right truss frame

Note: Retain the flange-head bolts, carriage bolts, and locknuts. You no longer need the narrow cylinder mount and narrow tie plate.

3. Separate the left and right truss frames.

Installing the Center-Boom Extension

1. Loosely assemble the center-boom extension to the truss frame with the previously removed 2 flange-head bolts (3/8 x 1 inch) and 2 flange locknuts (3/8 inch).

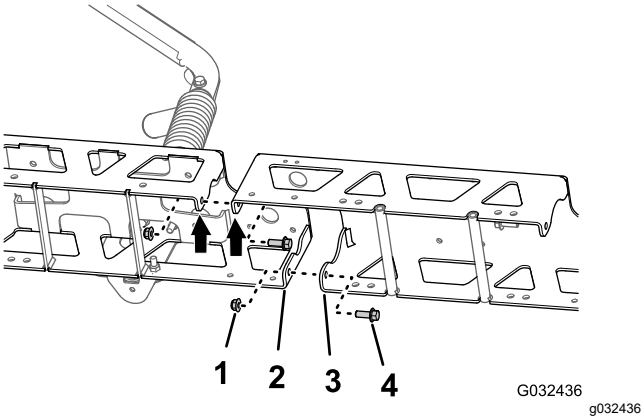

Figure 37

1. Flange locknut (3/8 inch)
2. Vertical flange (truss frame)
3. Vertical flange (center-boom extension)
4. Flange-head bolt (3/8 x 1 inch)

2. Loosely assemble the center-boom extension to the other truss frame with the 2 flange-head bolts (3/8 x 1 inch) and 2 flange locknuts (3/8 inch).
3. Insert the tie plate into the truss frame and center-boom extension and align the hole in the tie plate with the holes at the centerline of the trusses and boom extension.

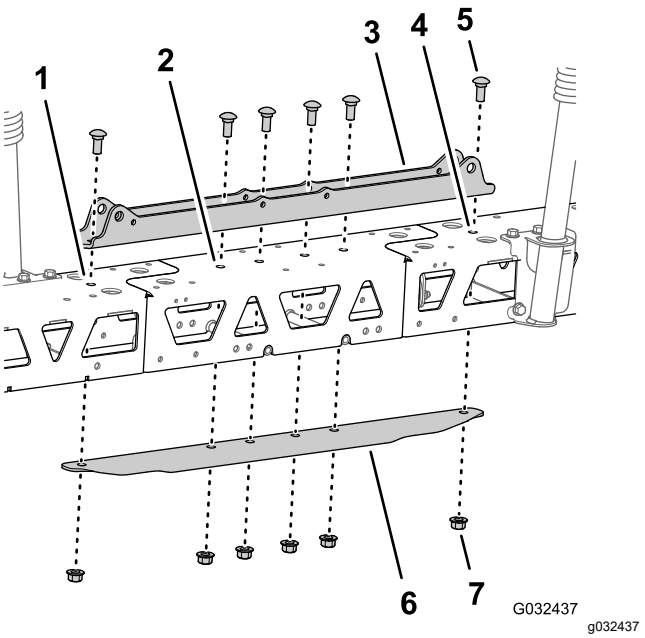

Figure 38

1. Left truss frame
2. Center-boom extension
3. Cylinder mount (wide)
4. Right truss frame
5. Carriage bolt (1/2 x 1-1/4 inches)
6. Tie plate (wide)
7. Flange locknut (1/2 inch)

4. Assemble the cylinder mount, trusses, center-boom extension, and tie plate using 6 carriage bolts (1/2 x 1-1/4 inches) and 6 flange locknuts (1/2 inch).

   Note: 2 of the carriage bolts and locknuts are from previously removed parts.
5. Torque the 3/8 inch flange head bolts and flange locknuts to 37 to 45 N·m (27 to 33 ft-lb).
6. Torque the 1/2 inch flange locknuts to 91 to 113 N·m (67 to 83 ft-lb).

8

Installing the Turrets to the Center-Boom Section

Parts needed for this procedure:

2	Turret
2	Hose assembly (valve 5 or 6)
2	Flange locknut (5/16 inch)

Assembling the Turrets and Hoses for the Center-Boom Section

1. Using lifting equipment, raise the new center-boom section to a comfortable working height.
2. Remove the stainless steel screw that secures the upper clamp half to the saddle.

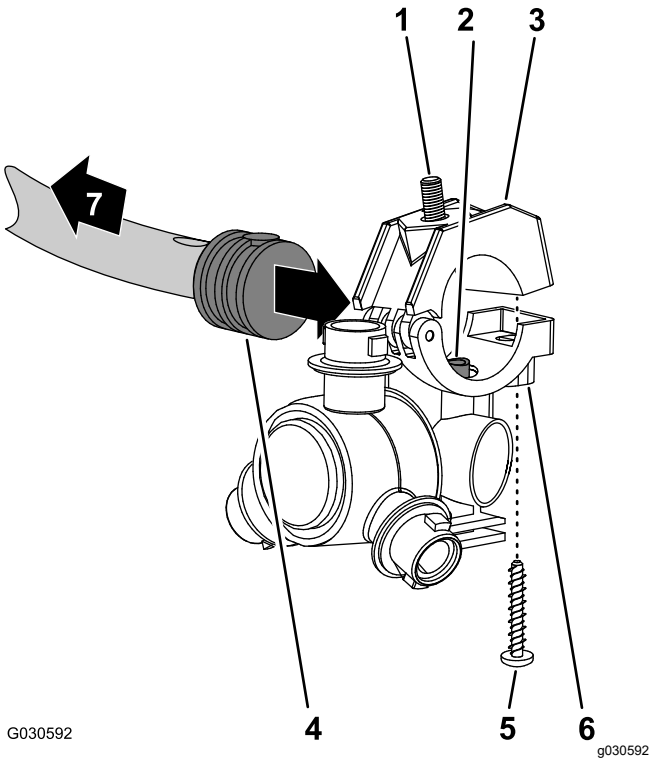

Figure 39

1. Hex-head bolt (5/16 x 3/4 inch—stainless steel)
2. Transfer tube
3. Upper clamp half
4. Single barbed-hose shank (1/2 inch)
5. Stainless steel screw (#12 x 1-1/4 inches)
6. Turret
7. Toward the spray section

3. Locate the hole in the side of single barbed-hose shank at the end of the hose 25 cm (10 inches) of the hose assembly (valve 5 or 6) for the center-boom section.

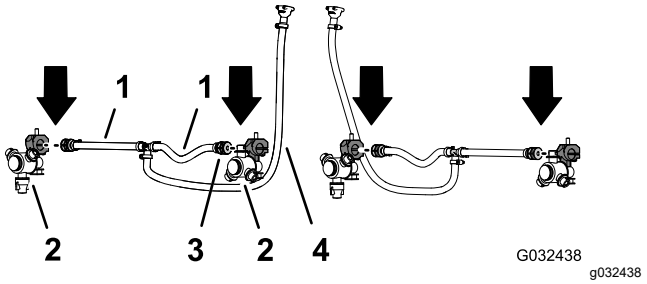

Figure 40

1. Hose 13 x 250 mm (1/2 x 10 inches—valve 5 or 6)
2. Turret
3. Single barbed-hose shank 13 mm (1/2 inch)
4. Hose and barbed coupler 13 x 810 mm (1/2 x 32 inches—valve 5 or 6)

4. Align the transfer tube in the saddle of a turret with the hole in the side of the single barbed-hose shank (1/2 inch).
5. Close the upper clamp half around the barbed-hose shank and secure the clamp half and spray-nozzle body with the stainless steel screw (#12 x 1-1/4 inches); torque the stainless steel screw to 14 to 18 N·m (20 to 25 in-lb).

   Important: **Do not over tighten the stainless steel screw.**

   Note: Ensure that the hex-head bolt (5/16 x 3/4 inch) is seated in the recess in the upper clamp half when closing the clamp.
6. Repeat steps 3 through 5 to the single barbed-hose shanks of the other hose assemblies (spray valve 5 or 6) for the center-boom section.

Installing the Turrets and Hoses to the Center-Boom Section

1. Route the hose 13 mm (10 inches) and turret assembly between the truss braces of the outer truss.

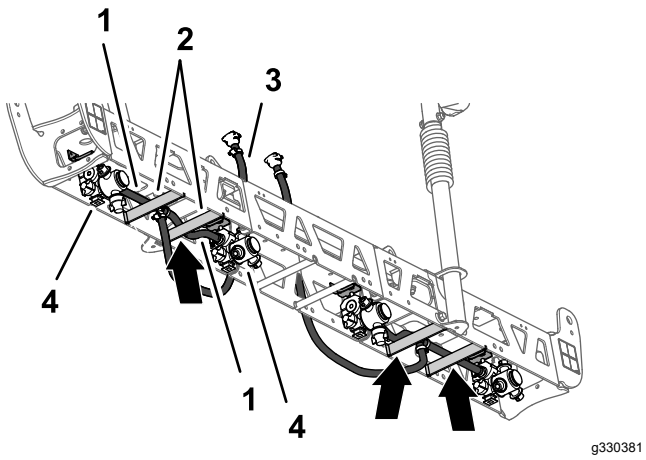

Figure 41

1. Hose 13 x 250 mm (1/2 x 10 inches)
2. Truss braces (left truss)
3. Hose and barbed coupler 13 x 810 mm (1/2 x 32 inches)
4. Sprayer nozzle

2. Route the hose and turret above the truss brace and outward to the outboard nozzle mount.
3. Loosely secure the turret to the mount with the hex-head bolt (5/16 x 3/4 inch) and a flange locknut (5/16 inch).

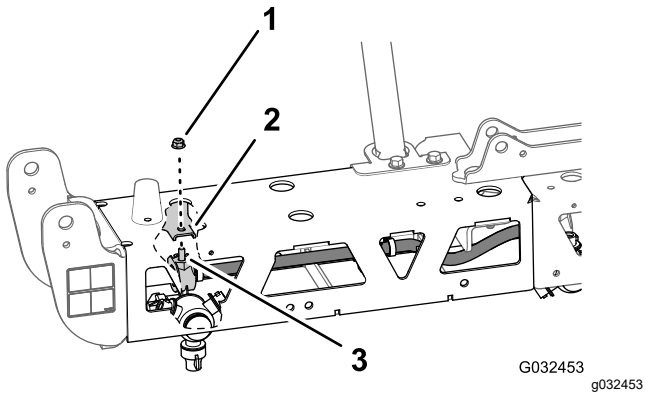

Figure 42

1. Flange locknut (5/16 inch)
2. Mount (outboard)
3. Hex-head bolt (5/16 x 3/4 inch—stainless steel)

4. Route the other hose 13 mm (10 inches) and turret assembly between the truss braces of the outer truss.
5. Route the hose and turret above the truss brace and inward to the inboard turret mount.
6. Loosely secure the turret to the mount with a the hex-head bolt (5/16 x 3/4 inch) and flange locknut (5/16 inch).
7. Torque the flange locknut to 1978 to 2542 N·cm (175 to 225 in-lb).
8. Route the hose and barbed coupler 13 x 810 mm (1/2 x 32 inches) to the side of the center-spray section with the left and right support brackets.
9. Repeat steps 1 through 8 for the other hose and turret at the other outer truss.

9

Removing the Boom-Section Valves

Parts needed for this procedure:

3	Cap (quick coupler)
3	Retainer

Removing the Section Bypass Hose

1. Remove the small retainer that secures the quick-disconnect fitting of the bypass hose to the quick-disconnect fitting of the right section-bypass valve.

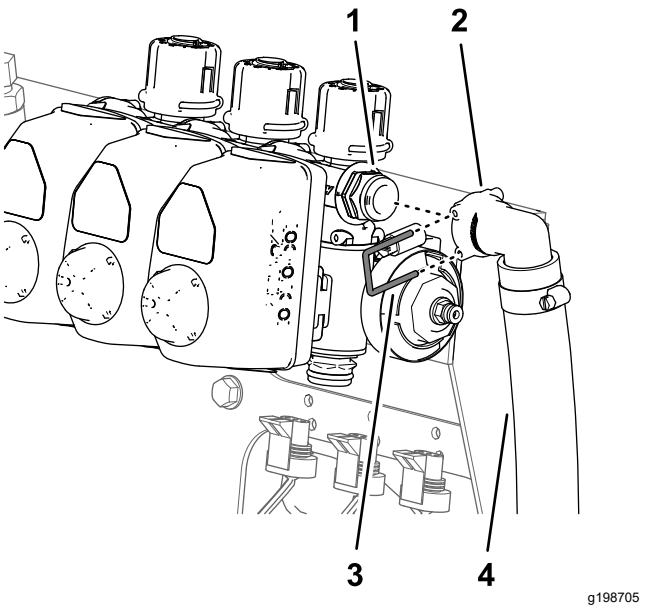

Figure 43

1. Quick-disconnect fitting (right section-bypass valve)
2. Quick-disconnect fitting (90° socket—bypass hose)
3. Retainer (small)
4. Bypass hose

2. Remove and retain the large retainer that secures the 90° barbed fitting at the lower end

of the bypass hose to the bulkhead fitting of the spray tank.

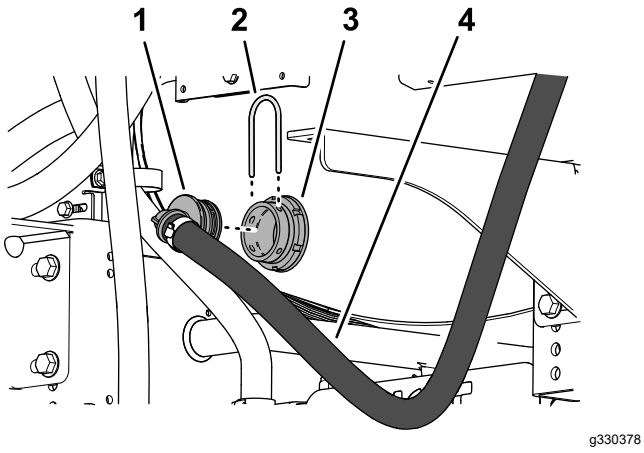

Figure 44

1. 90° barbed fitting
2. Retainer (large)
3. Bulkhead fitting
4. Bypass hose

3. Remove and discard the bypass hose from the machine.

Positioning the Bypass Valves

1. Remove the 3 retainers that secure the 3 valve actuators to the left, center, and right section valves.

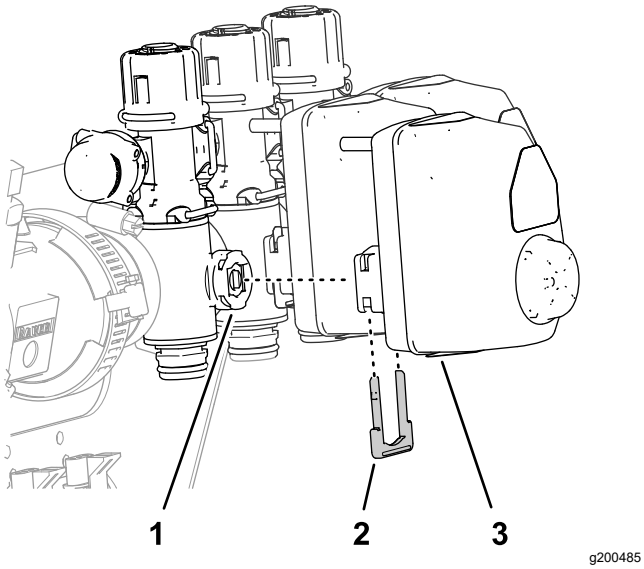

Figure 45

1. Section valve
2. Retainer
3. Valve actuator

2. Remove the valve actuators from the left, center, and right section valves.
3. Remove the retainer that secures the cap to the quick disconnect fitting of the bypass valve, and remove and discard the cap.

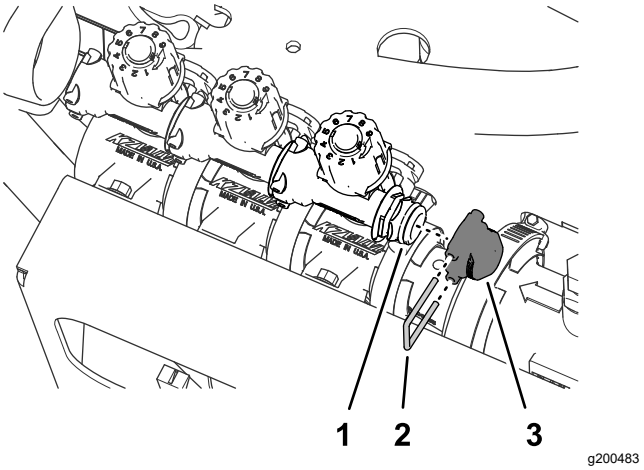

Figure 46

1. Quick disconnect fitting (bypass valve)
2. Retainer
3. Cap

4. Remove the 3 retainers that secure the 3 bypass valves to the left, center, and right section valves.

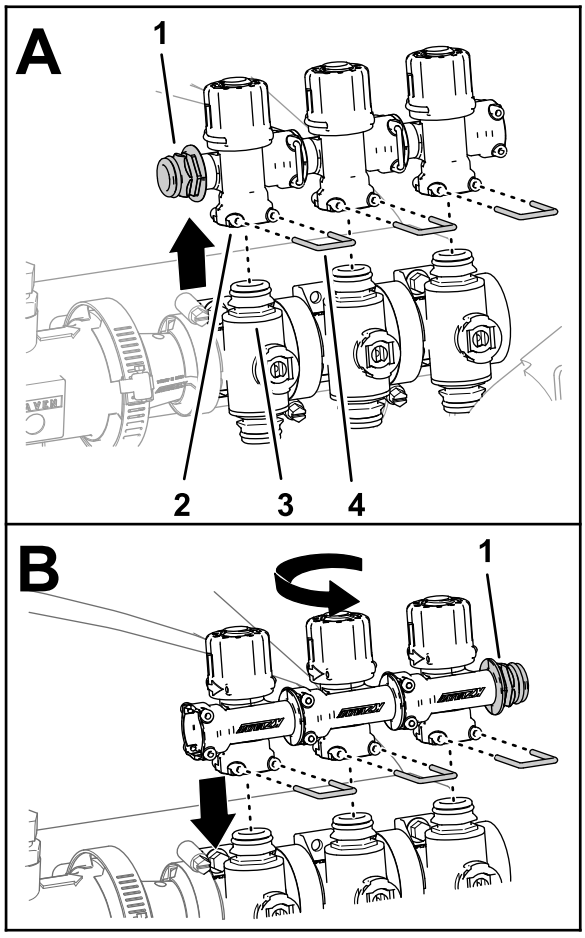

g200486

Figure 47

1. Quick disconnect fitting
2. Quick connect fitting—socket (bypass valve)
3. Quick connect fitting (section valve)
4. Retainer

5. Lift the bypass valves from the section valves.
6. Rotate the bypass valves 180° and assemble them onto the quick disconnect fittings of the section valves.
7. Secure the 3 bypass valves to the section valves with the 3 retainers that you previously removed.
8. Assemble plug into the quick connect socket of the bypass valve.

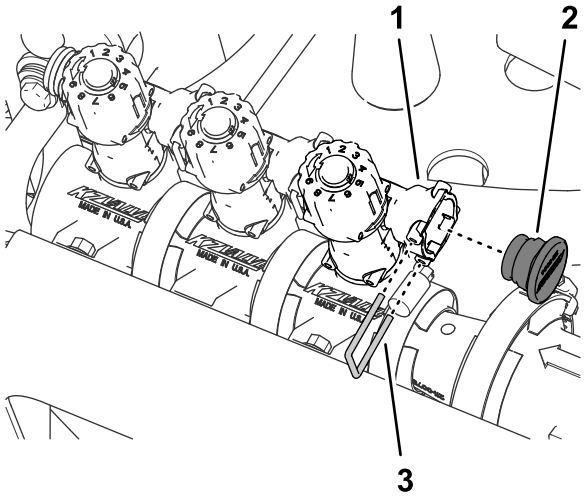

g200481

Figure 48

1. Quick connect socket (bypass valve)
2. Plug
3. Retainer

9. Secure the plug to the quick connect socket with the previously removed retainer.
10. Assemble the 3 valve actuators onto the left, center, and right section valves with the previously removed retainers.

Removing the Section Valves from the Manifold Mount

1. Remove and discard the 2 flange-head bolts (1/4 x 3/4 inch) and 2 locknuts (1/4 inch) that secure the left boom-section valve to the manifold mount.

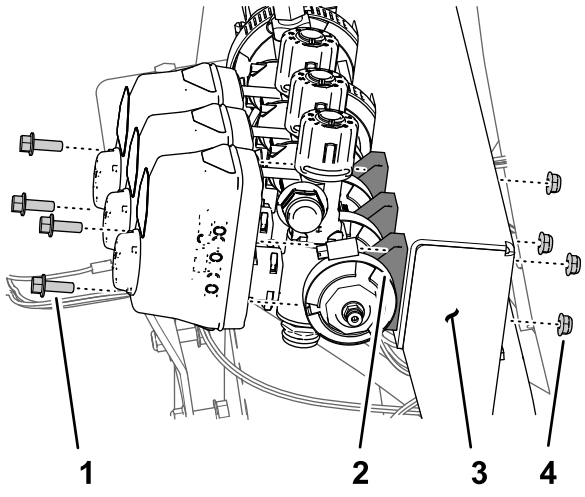

g198704

Figure 49

1. Flange-head bolt (1/4 x 3/4 inch)
2. Section valve
3. Manifold mount
4. Locknut (1/4 inch)

2. Remove the 2 flange-head bolts (1/4 x 3/4 inch) and 2 locknuts (1/4 inch) that secure the right boom-section valve to the manifold mount.
3. Remove the flange clamp 40 to 64 mm (1-9/16 to 2-1/2 inches) and gasket 25 x 35 mm (1 x 1-3/8 inches) that secures the flange of the left section valve to the adapter.

   Note: Retain the 2 flange-head bolts, 2 locknuts, flange clamp and gasket.

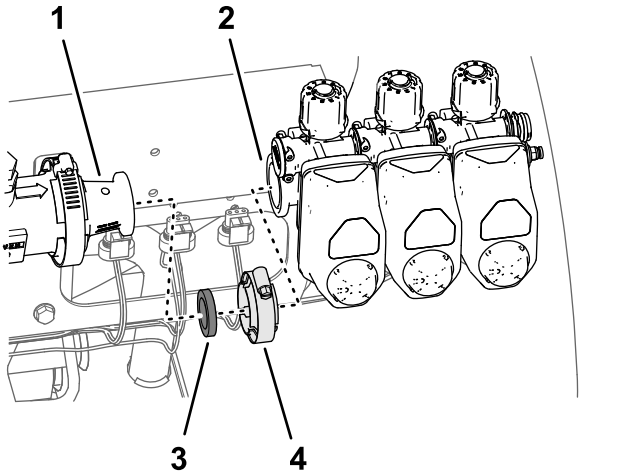

g198706

Figure 50

1. Adapter
2. Flange (left section valve)
3. Gasket 25 x 35 mm (1 x 1-3/8 inches)
4. Flange clamp 40 to 64 mm (1-9/16 to 2-1/2 inches)

4. Remove the 3 section valves from the machine.
5. Remove the decals from the actuators of the 3 section valves.

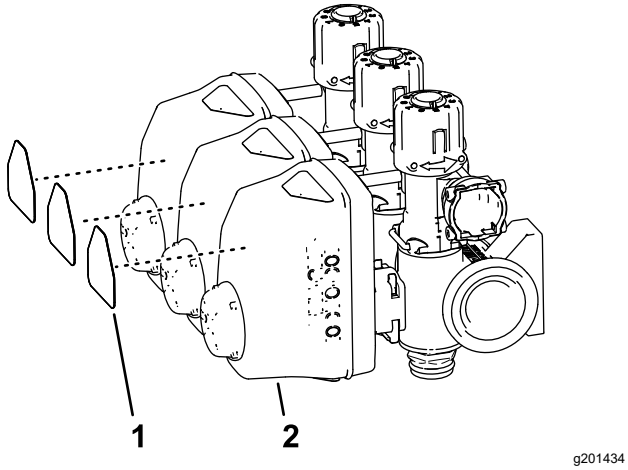

g201434

Figure 51

1. Section-valve decal
2. Actuator (section valve)

6. Remove and retain the flange clamp 51 mm (2 inches) and gasket 38 mm (1-1/2 inches) that secure the flange of the adapter to the flange of the flow meter.

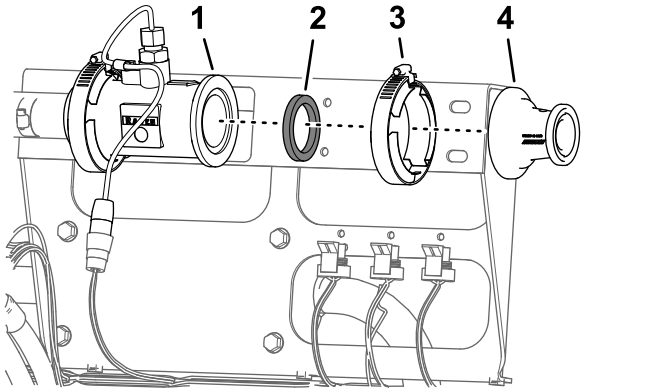

g198707

Figure 52

1. Flange (flow meter)
2. Gasket
3. Flange clamp 51 mm (2 inches)
4. Adapter

10

Installing the Flow Meter Support Clamps

Parts needed for this procedure:

1	Flow meter mount
4	Support-clamp half
4	Bolt (1/4 x 4-1/2 inches)
4	Flange locknuts (1/4 inch)

Removing the Section-Valve Bracket

1. Disconnect the 3-socket connector of the machine wire harness labeled FLOW METER from the 3-pin connector of the flow meter.

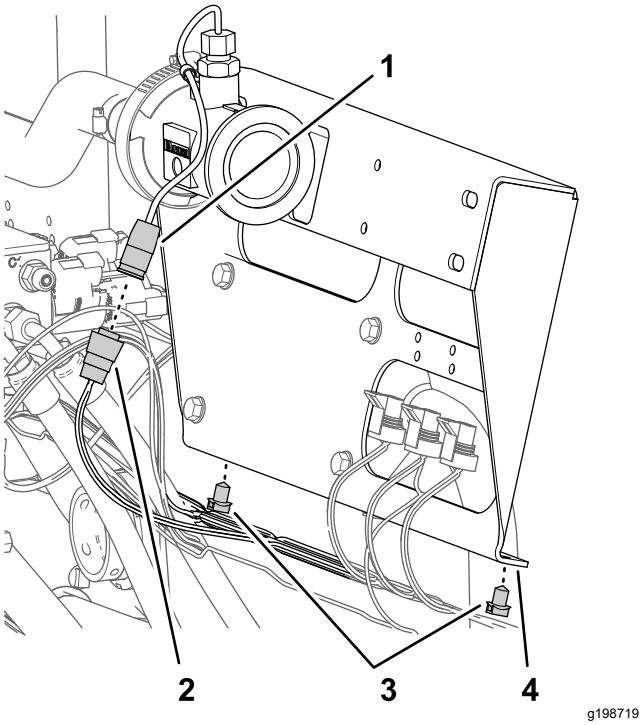

Figure 53

1. 3-pin connector (flow meter)
2. 3-socket connector (machine wire harness—FLOW METER)
3. Push-in fasteners
4. Section-valve bracket

2. Remove the 2 push-in fasteners of the machine wire harness from the bottom flange of the section-valve bracket.
3. Remove the 4 flange-head screws (5/16 x 3/4 inch) that secure the section-valve bracket from the valve mount, and remove the valve bracket from the machine.

   Note: Retain the 4 flange-head screws; you no longer need the section-valve bracket.

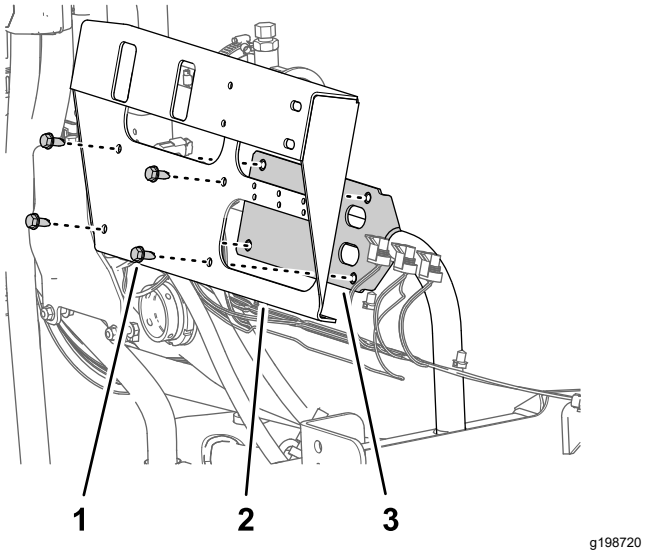

Figure 54

1. Flange-head screw (5/16 x 3/4 inch)
2. Section-valve bracket
3. Valve mount

Installing the Flow Meter Mount and Clamps

1. Align the holes in the flow-meter bracket with the holes in the valve mount.

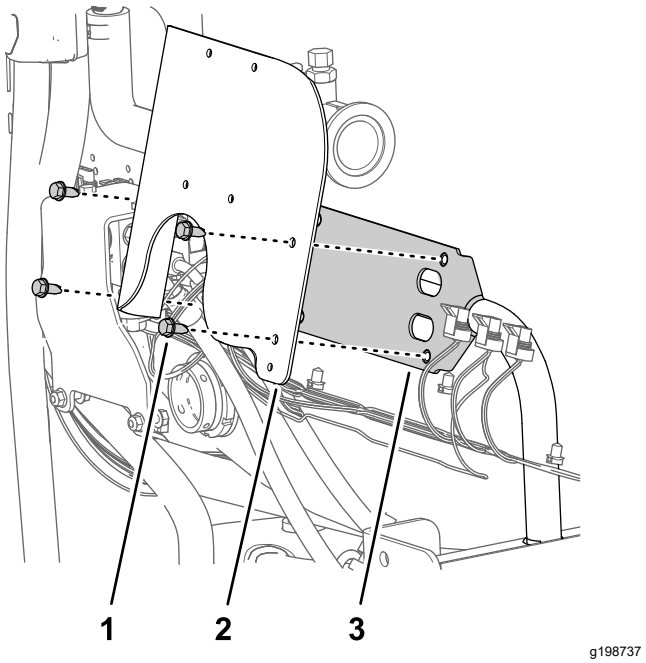

Figure 55

1. Flange-head screw (5/16 x 3/4 inch)
2. Flow-meter bracket
3. Valve mount

2. Assemble the flow-meter bracket to the valve mount with the previously removed 4

flange-head screws, and torque the screws to 1978 to 2542 N·cm (175 to 225 in-lb).

3. Assemble the pair of clamp halves to the flow meter bracket with 2 bolts (1/4 x 4-1/2 inches) and 2 flange locknuts (1/4 inch).

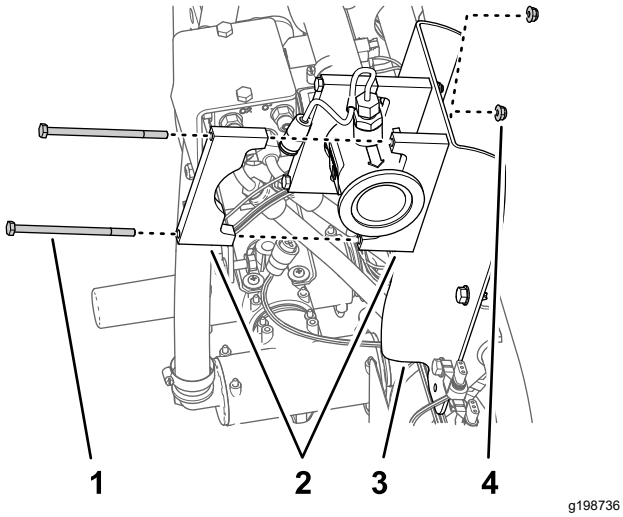

Figure 56

1. Bolt (1/4 x 4-1/2 inches)
2. Support-clamp half
3. Flow-meter bracket
4. Flange locknut (1/4 inch)

4. Torque the bolts and nuts to 1017 to 1243 N·cm (90 to 110 in-lb).

11

Assembling the Rear Harness to the Machine

Parts needed for this procedure:

1	Rear harness

Routing the Rear Harness

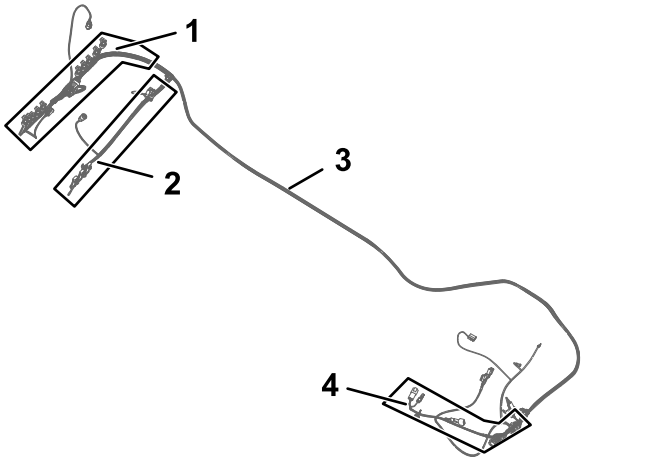

Figure 57

1. 102 cm (40 inch) wire-harness branch—ASC10 and NOZZLE-VALVES 1 through 10
2. 89 cm (35 inch) wire-harness branch—RATE VALVE, MASTER VALVE, FLOW METER, LEFT SPRAY, CENTER SPRAY, and RIGHT SPRAY
3. Kit wire harness 457 cm (180 inch)
4. 84 cm (33 inch) wire-harness branch—PUMP CLUTCH

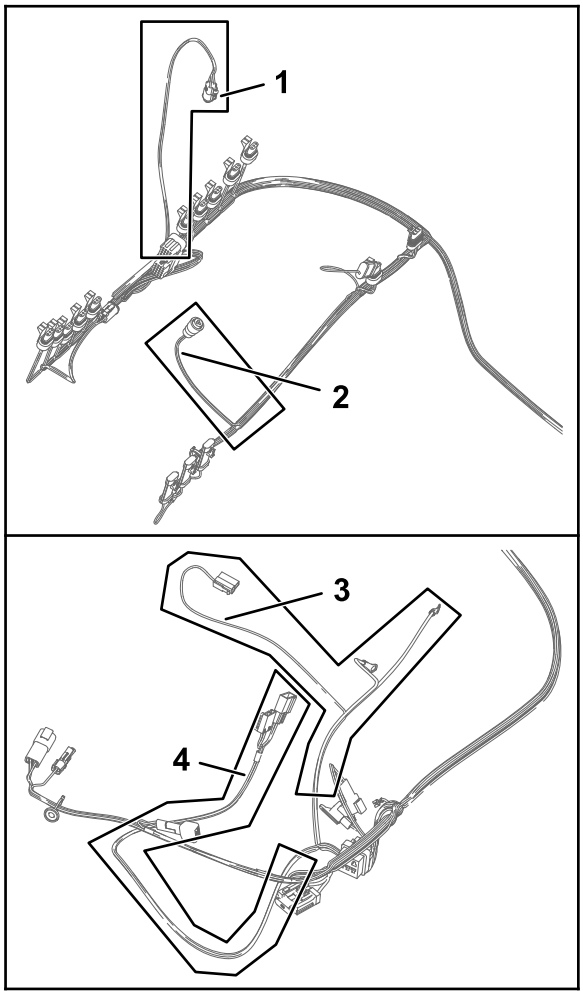

g198814

Figure 58

1. 61 cm (24 inch) wire-harness branch—PRESSURE TRANSDUCER GREEN WEDGE
2. 23 cm (9 inch) wire-harness branch—FLOW METER
3. 60 cm (23-1/2 inch) wire-harness branch—TO BATTERY POSITIVE, battery negative, and alternator
4. 66 cm (26 inch) wire-harness branch—ASC 10 ENABLE RELAY, 50 A FUSE, DIODE, SW'D PWR FOR GEN 2 TOPCON, and ASC 10 power and CAN from X25

1. Route the 84 cm (33 inch), 60 cm (23-1/2 inch), and 66 cm (26 inch) wire-harness branches of the rear harness to the left side of the machine along the machine wire harness.

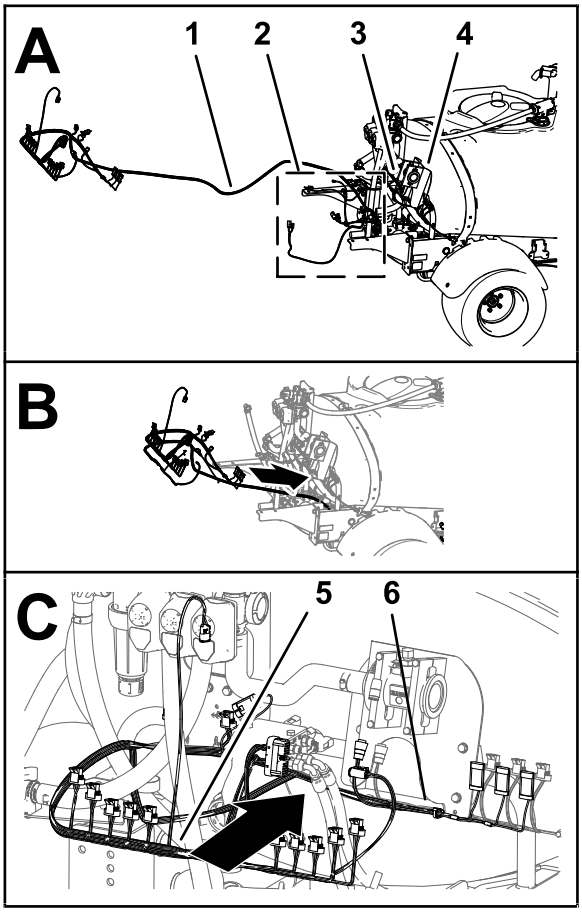

g330375

Figure 59

1. Rear wire harness 457 cm (180 inch)
2. 84 cm (33 inch) wire-harness branch, 60 cm (23-1/2 inch) wire-harness branch, and 66 cm (26 inch) wire-harness branch
3. Machine wire harness
4. Manifold mount
5. 102 cm (40 inch) wire-harness branch
6. 89 cm (35 inch) wire-harness branch

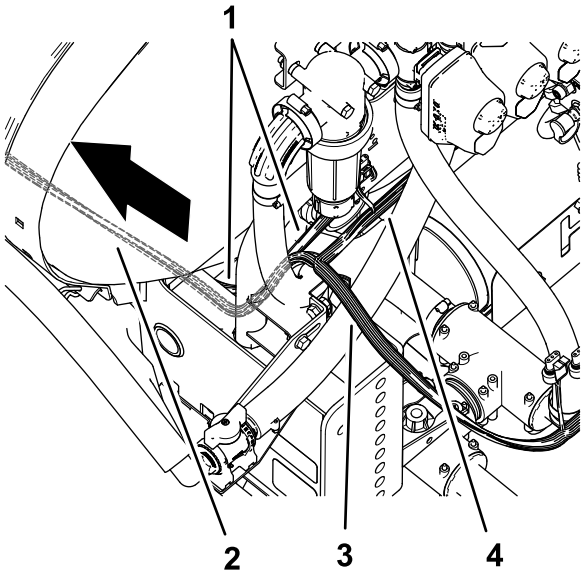

g199037

Figure 60

1. Machine wire harness
2. Rear harness 457 cm (180 inch)
3. 102 cm (40 inch) wire-harness branch—ASC10 and NOZZLE-VALVES 1 through 10
4. 89 cm (35 inch) wire-harness branch—RATE VALVE, MASTER VALVE, FLOW METER, LEFT SPRAY, CENTER SPRAY, and RIGHT SPRAY

2. Route the 84 cm (33 inch), 60 cm (23-1/2 inch), and 66 cm (26 inch) wire-harness branches of the rear harness forward along the left frame channel.

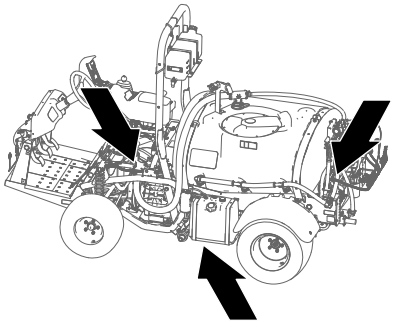

g199043

Figure 61

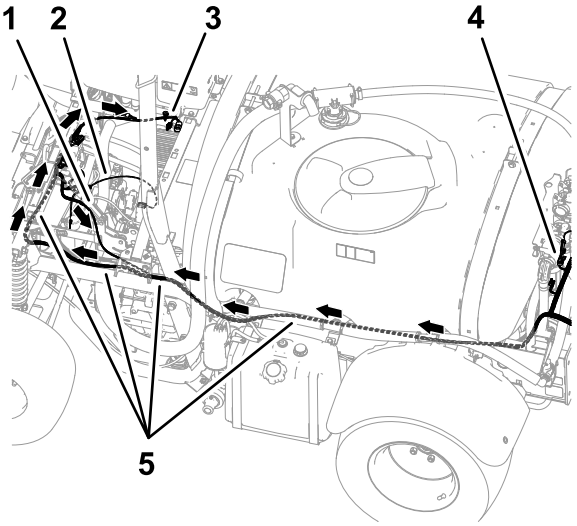

g199038

Figure 62

1. 84 cm (33 inches) wire-harness branch—pump clutch
2. 60 cm (23-1/2 inch) wire-harness branch—TO BATTERY POSITIVE, battery negative, and alternator
3. 66 cm (26 inch) wire-harness branch—ASC 10 ENABLE RELAY, 50 A FUSE, DIODE, SW'D PWR FOR GEN 2 TOPCON, and ASC 10 power and CAN from X25
4. 102 cm (40 inch) wire-harness branch—ASC10 and NOZZLE-VALVES 1 through 10
5. Rear harness 457 cm (180 inch)

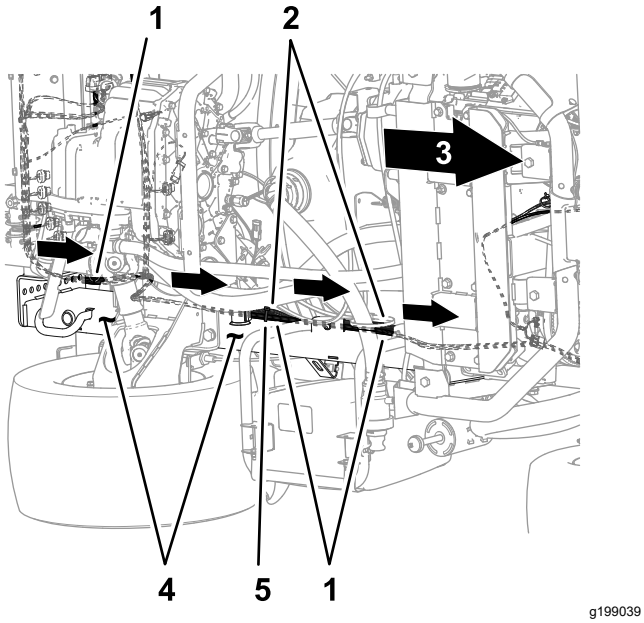

Figure 63

Bottom of the machine

1. Rear harness 457 cm (180 inch)
2. Machine wire harness
3. Front of the machine
4. Left frame channel
5. Cable tie

3. Route the 84 cm (33 inch), 60 cm (23-1/2 inch), and 66 cm (26 inch) wire-harness branches of the rear harness along the machine wire harness, outboard of the parking-brake assembly.

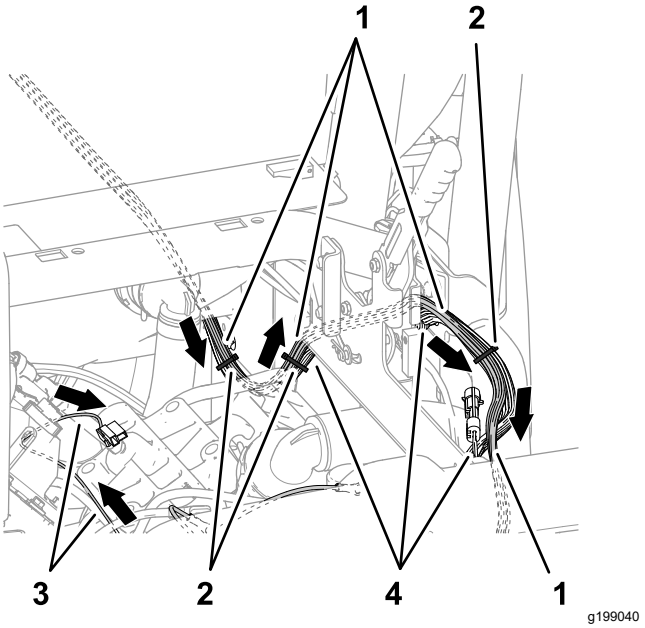

Figure 64

1. Rear harness 457 cm (180 inch)
2. Cable ties
3. 60 cm (23-1/2 inch) wire-harness branch—TO BATTERY POSITIVE, battery negative, and alternator
4. Machine wire harness

4. Route the 84 cm (33 inch), 60 cm (23-1/2 inch), and 66 cm (26 inch) wire-harness branches of the rear harness across the shock-support tube.

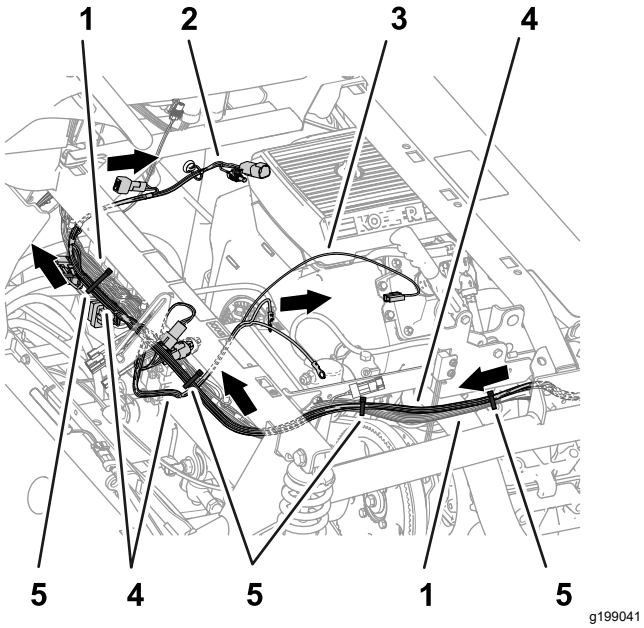

Figure 65

1. Machine wire harness
2. 66 cm (26 inch) wire-harness branch—ASC 10 ENABLE RELAY, 50 A FUSE, DIODE, SW'D PWR FOR GEN 2 TOPCON, and ASC 10 power and CAN from X25
3. 60 cm (23-1/2 inch) wire-harness branch—TO BATTERY POSITIVE, battery negative, and alternator
4. Rear harness 457 cm (180 inch)
5. Cable ties

5. Secure the rear harness to the machine wire harness.
6. At the back of the machine, route the 89 cm (35 inch) wire-harness branch forward of the lift manifold, and to the right of the flow meter.

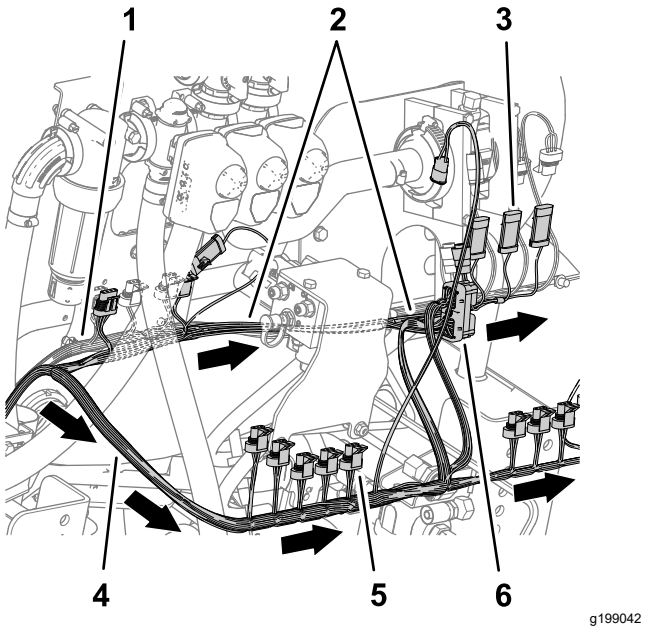

Figure 66

1. Machine wire harness
2. 89 cm (35 inch) wire-harness branch—RATE VALVE, MASTER VALVE, FLOW METER, LEFT SPRAY, CENTER SPRAY, and RIGHT SPRAY
3. 3-pin connector (CENTER SPRAY)
4. 3-socket connector (NOZZLE VALVE 5)
5. 102 cm (40 inch) wire-harness branch—ASC10 and NOZZLE-VALVES 1 through 10
6. 40-socket connector (ASC 10)

7. Route the 102 cm (40 inch) wire-harness branch rearward of the lift manifold and to the right.

Connecting the Left, Center, and Right Spray-Valve Connectors

1. Connect the 3-pin connector of the 89 cm (35 inch) rear harness branch labeled LEFT SPRAY to the 3-socket connector of the machine wire harness labeled LEFT SPRAY VALVE.

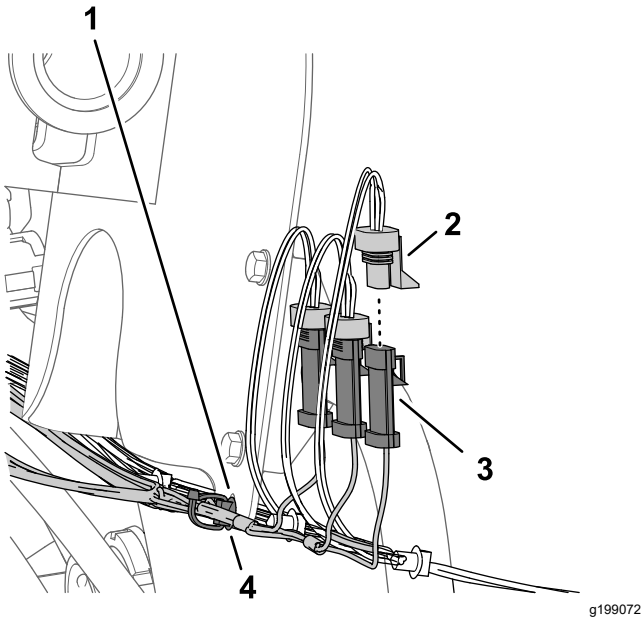

Figure 67

1. Flow-meter bracket
2. 3-socket connector—89 cm (35 inch) rear harness branch (RIGHT SPRAY)
3. 3-pin connector (machine wire harness—RIGHT SPRAY VALVE)
4. Push-in fastener

2. Connect the 3-pin connector rear harness labeled CENTER SPRAY to the 3-socket connector of the machine wire harness labeled CENTER SPRAY VALVE.
3. Connect the 3-pin connector of the rear harness labeled RIGHT SPRAY to the 3-socket connector of the machine wire harness labeled RIGHT SPRAY VALVE.
4. Insert the push-in fastener of the rear harness into the hole in the flange of the flow-meter bracket.

Connecting the Flow Meter, Master Section Valve, and Rate Valves Electrical Connectors

1. Connect the 3-socket electrical connector of the 89 cm (35 inch) rear harness branch labeled FLOW METER into the 3-pin connector of the flow meter.

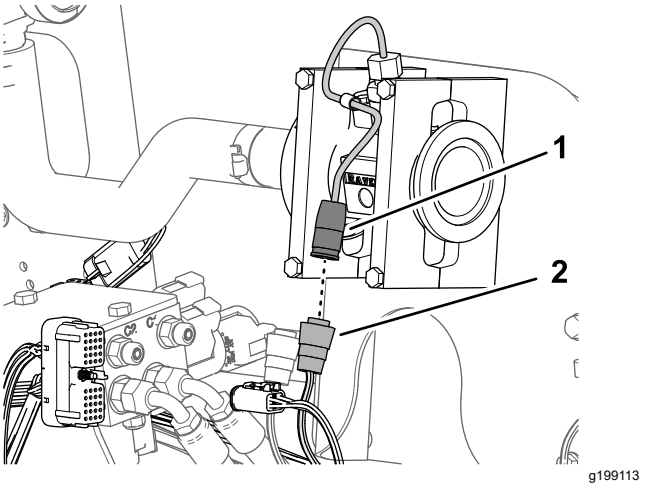

Figure 68

1. 3-pin connector (flow meter)
2. 3-socket electrical connector (89 cm (35 inch) rear harness branch—FLOW METER)

2. Connect the 3-pin connector of the 89 cm (35 inch) rear harness branch labeled MASTER VALVE into the 3-socket connector of the machine wire harness labeled MASTER SPRAY VALVE.

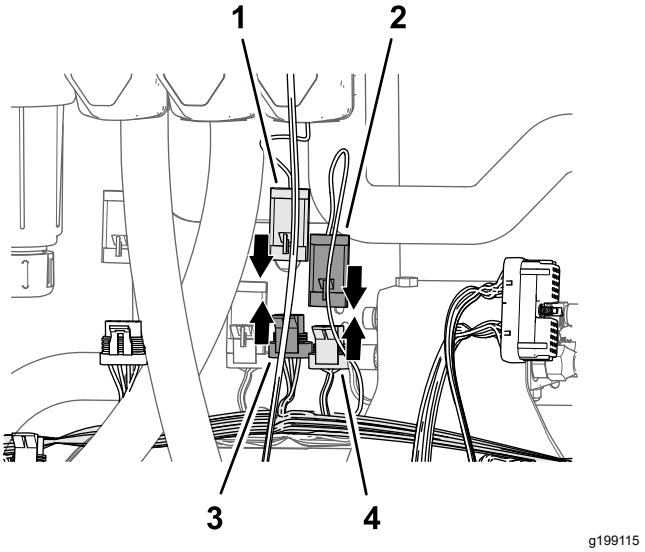

Figure 69

1. 3-pin connector(actuator—master-spray valve)
2. 3-pin connector (89 cm (35 inch) rear sprayer-harness branch—MASTER VALVE)
3. 3-pin connector (89 cm (35 inch) rear sprayer-harness branch—MASTER VALVE)
4. 3-socket connector (machine wire harness—MASTER SPRAY VALVE)

3. Connect 3-pin connector of the actuator for the master-spray valve into the 3-socket connector of the 89 cm (35 inch) rear harness branch labeled MASTER VALVE.
4. Connect the 4-pin connector of the actuator for the rate valve into the 4-socket connector of the

89 cm (35 inch) rear harness branch labeled RATE VALVE.

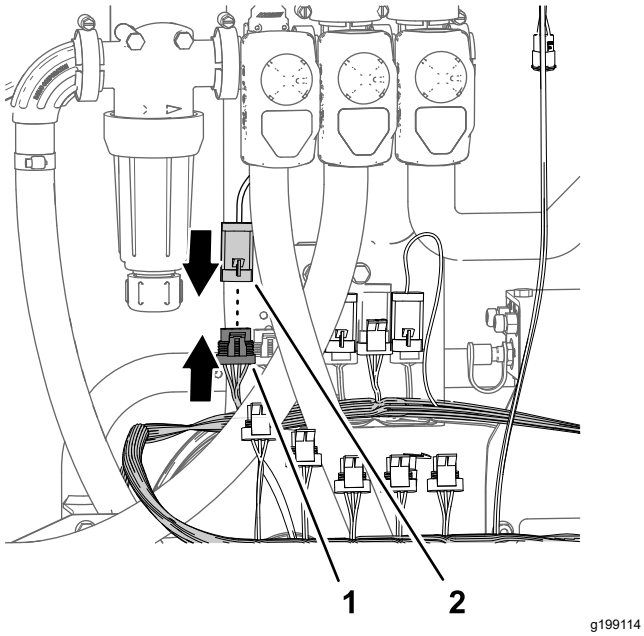

Figure 70

1. 4-socket connector—89 cm (35 inch) rear harness branch—RATE VALVE)
2. 4-pin connector (actuator—rate valve)

12

Assembling the Flow-Meter Manifold

Parts needed for this procedure:

1	Straight hose barb (1 x 2 inches)
3	Hose clamp (3/4 to 1-1/2 inches)
1	Hose (1 x 5-3/4 inches)
1	Manifold
1	Hose (1 x 16 inches)

Assembling the Manifold

1. Assemble hose (1 x 5-3/4 inches) on to the straight hose barb (1 x 2 inches) with a hose clamp (3/4 to 1-1/2 inches), and tighten the clamp by hand.

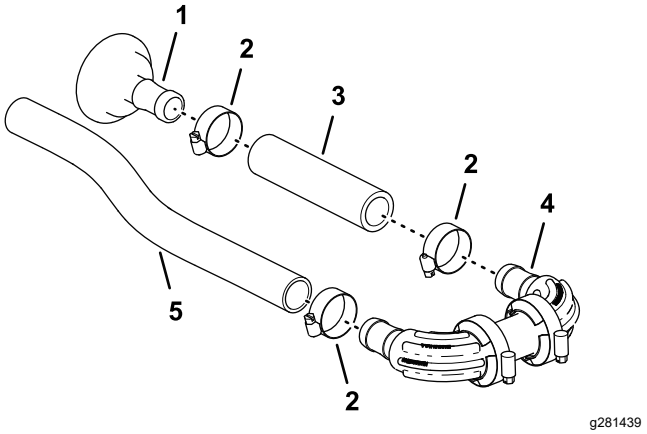

Figure 71

1. Straight hose barb (1 x 2 inches)
2. Hose clamp (3/4 to 1-1/2 inches)
3. Hose (1 x 5-3/4 inches)
4. Manifold
5. Hose (1 x 16 inches)

2. Assemble the other end of the hose (1 x 5-3/4 inches) onto the barbed fitting of the manifold with a hose clamp and tighten the hose clamp by hand.
3. Assemble the hose (1 x 16 inches) onto the other barbed fitting of the manifold with a hose clamp, and tighten the clamp by hand.

Assembling the Manifold to the Flow Meter

1. Assemble the straight hose barb (1 x 2 inches) to the flange of the flow meter with the gasket 38 mm (1-1/2 inches) and flange clamp 51 mm (2 inches).

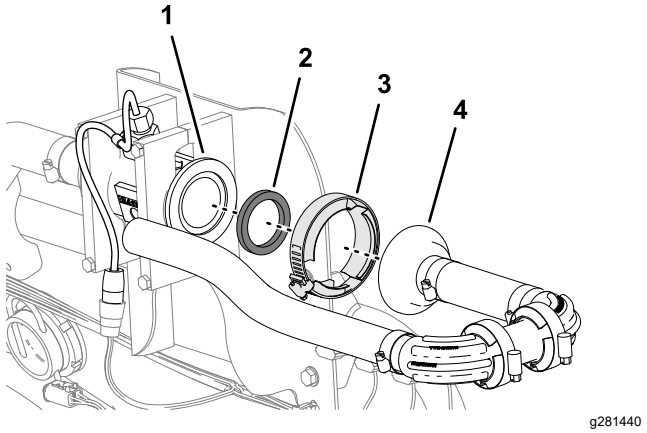

Figure 72

1. Flange (flow meter)
2. Gasket 38 mm (1-1/2 inches)
3. Flange clamp 51 mm (2 inches)
4. Straight hose barb (1 x 2 inches)

2. Tighten the flange clamp by hand.

13

Installing the Bypass Hoses to the Tank

Parts needed for this procedure:

1	Bypass hose assembly
1	Shutoff valve

Assembling the Bypass Hoses to the Tank

1. Align the bypass hose assembly to the tank.

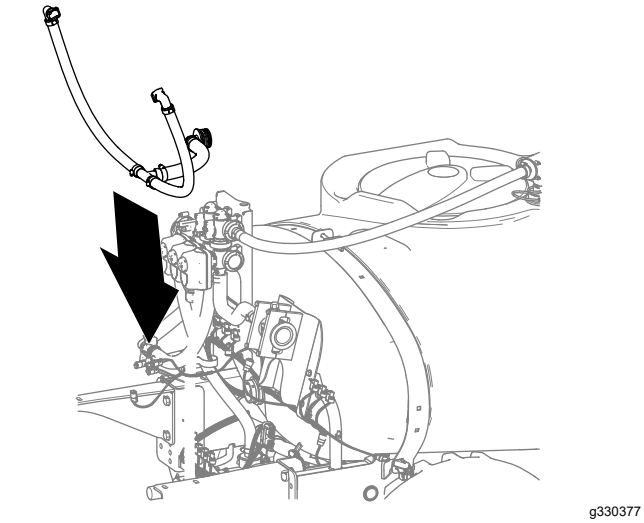

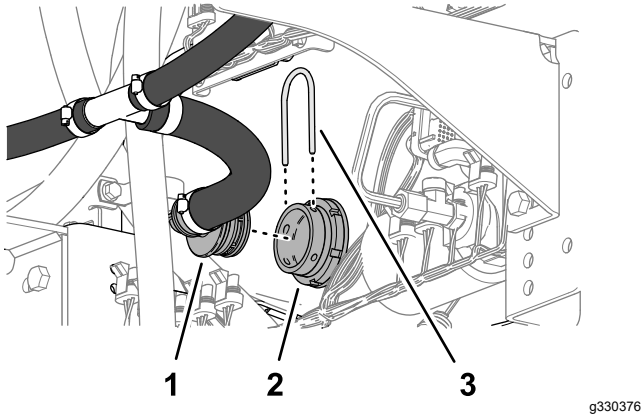

Figure 73

1. 90° barbed fitting (bypass hose assembly)
2. Bulkhead fitting (spray tank)
3. Retainer

2. Secure the 90° barbed fitting to the bulkhead fitting of the tank with a retainer.

14

Installing the Modified Center-Boom Section

No Parts Required

Procedure

Lifting-equipment capacity: 55 kg (120 lb)

1. Using lifting equipment with the specified lift capacity, raise the center-boom section and align the boom section with the holes in the support brackets.

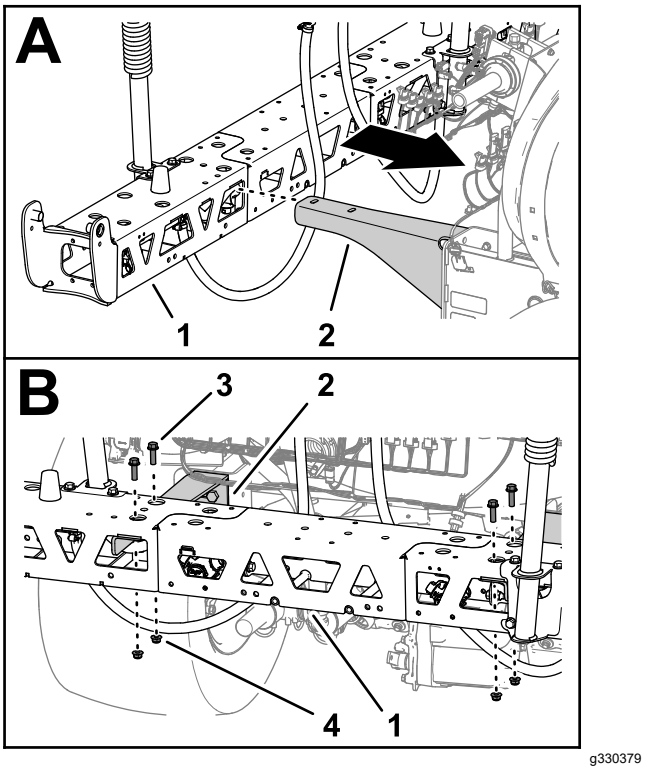

Figure 74

1. Center-boom section
2. Support bracket
3. Flange-head bolt (3/8 x 1-1/4 inches)
4. Flange locknut (3/8 inch)

2. Assemble the center-boom section to the support brackets with the 4 flange-head bolts (3/8 x 1-1/4 inches) and 4 flange locknuts (3/8 inch).
3. Torque the nuts and bolts to 37 to 45 N·m (27 to 33 ft-lb).

15

Assembling the Lift Cylinder Manifold to the Cylinder Mount

No Parts Required

Procedure

1. Untie the lift manifold from the valve-mount bracket.
2. Align the holes in the support bracket for the section-lift manifold with the holes in the cylinder mount.

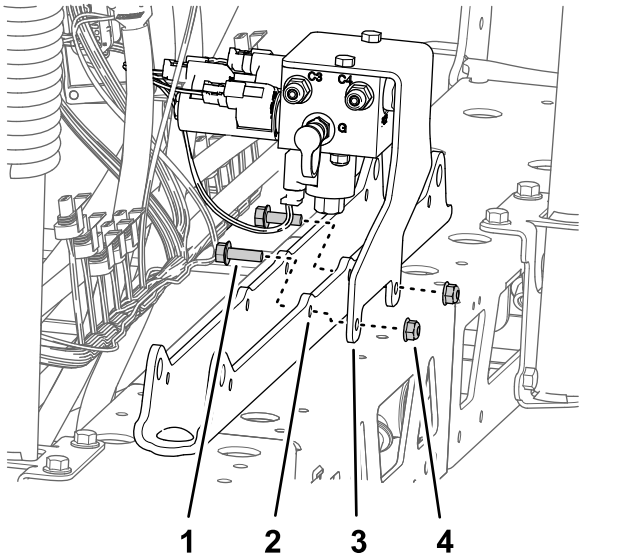

Figure 75

1. Flange-head bolt (5/16 x 1 inch)
2. Cylinder mount
3. Support bracket (section-lift manifold)
4. Flange locknut (5/16 inch)

3. Assemble the support bracket to the cylinder mount with the 2 flange-head bolt (5/16 x 1 inch) and flange locknut (5/16 inch).
4. Torque the bolts and nuts to 1978 to 2542 N·cm (175 to 225 in-lb).

16

Installing the Valve Mount, Rate/Section Controller, and Section Valves

Parts needed for this procedure:

1	Valve mount and valve assembly
1	Rate/Section controller
4	Magnet
4	Bolt (#8)
4	Flat washer
4	Locknut (#8)
2	Cap (quick-disconnect fitting)
8	Flange-head bolts (5/16 x 3/4 inch)
8	Flange locknuts (5/16 inch)
1	Hose clamp
1	Push-in fastener (cable tie)
3	Push-in fastener (connector anchor)

Installing the Controller to the Valve Mount

1. Secure the magnets to the controller using 4 bolts (#8), 4 washers, and 4 locknuts (#8).

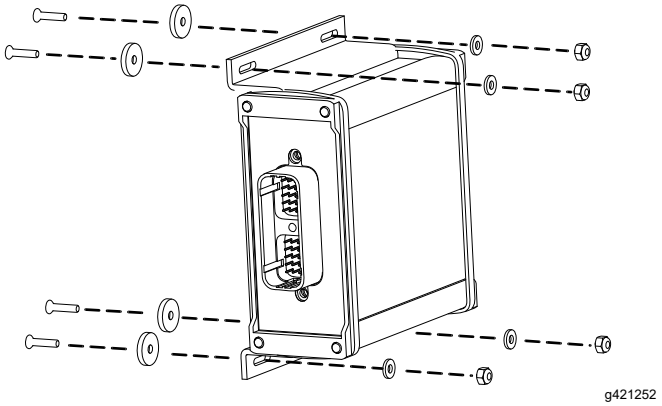

Figure 76

2. Place the controller assembly onto the valve mount.

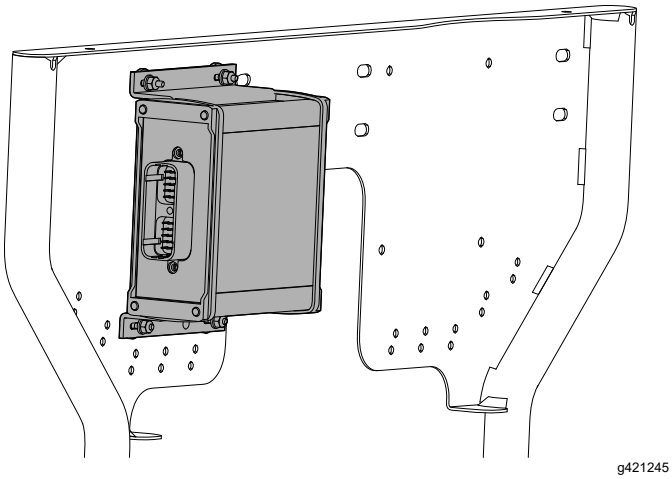

g421245

Figure 77

Assembling the 3 Section Valves to the Valve Mount

1. Assemble the 3 section valves onto the flange of valve 7 of the spray valve assembly with the flange clamp and gasket.

   Important: **The left, center, and right section valves are identified in the GeoLink sprayer system as follows: left section valve—nozzle 8, center section valve—nozzle 9, and right section valve—nozzle 10.**

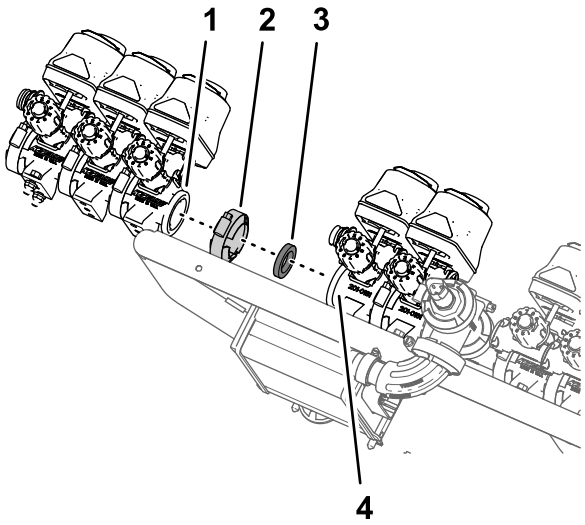

g199387

Figure 78

1. Flange—section valve (left spray section—nozzle valve 8)
2. Flange clamp
3. Gasket
4. Flange—section valve 7 (GeoLink spray valve assembly)

2. Secure the socket of the quick-disconnect coupling for bypass valve of section valve 8 to the quick-disconnect coupling for bypass valve of section valve 7 with the previously removed retainer.

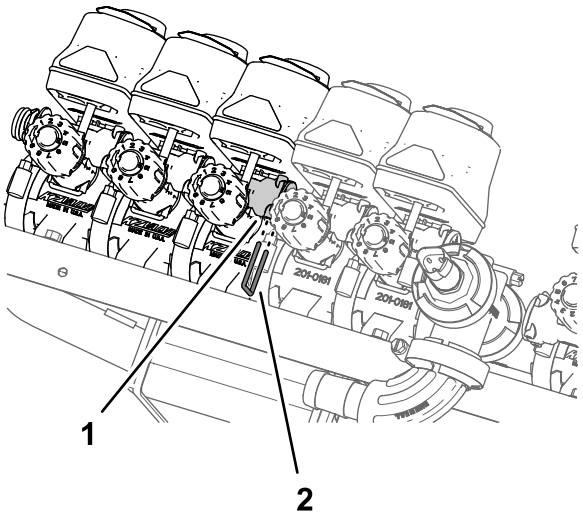

g199386

Figure 79

1. Quick-disconnect coupling (socket—bypass valve)
2. Retainer

3. Assemble nozzle valve 10 to the valve mount the with the previously removed 2 flange-head bolt (1/4 x 3/4 inch) and 2 locknuts (1/4 inch).

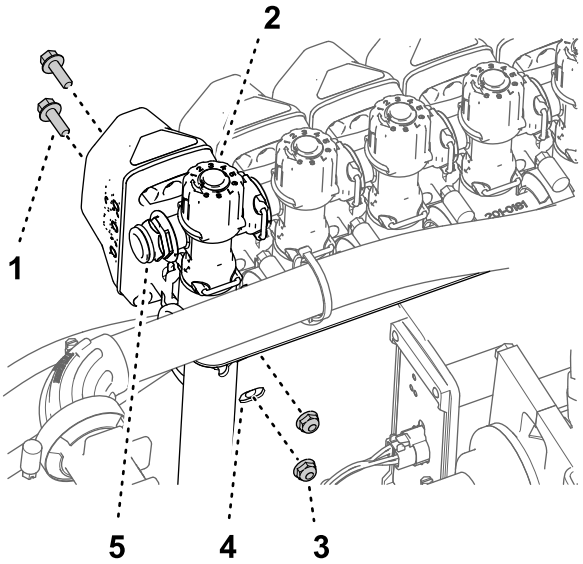

g201492

Figure 80

Machines without the Hand Spray Wand Kit or the Electric Hose Reel Kit

1. Flange-head bolt (1/4 x 3/4 inch)
2. Section valve 10
3. Locknut (1/4 inch)
4. Valve mount
5. Quick-disconnect fitting (plug)

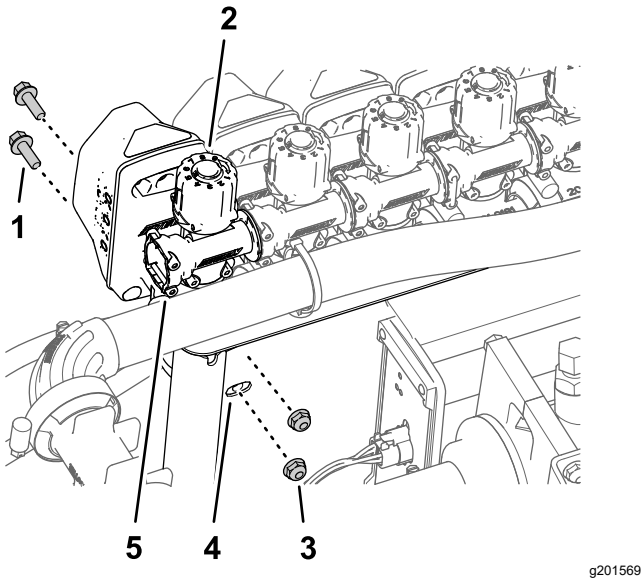

Figure 81

Machines with the Hand Spray Wand Kit or the Electric Hose Reel Kit

1. Flange-head bolt (1/4 x 3/4 inch)
2. Section valve 10
3. Locknut (1/4 inch)
4. Valve mount
5. Quick-disconnect fitting (socket)

4. Torque the flange-head bolts and locknuts to 1017 to 1243 N·m (90 to 120 in-lb).

Assembling the Valve Mount and Section Valve Assembly to the Machine

Lifting-equipment capacity: 23 kg (50 lb)

1. Using lifting equipment with the specified capacity, lift the valve mount and section valve assembly and align it over the center-boom section.

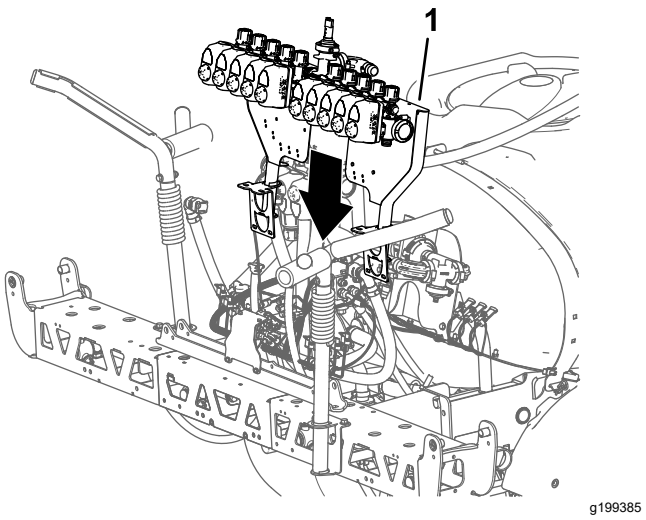

Figure 82

1. Valve mount and sprayer-valve assembly

2. Align the holes on the mount bracket of the valve mount to the holes on the truss frame of the center boom section.

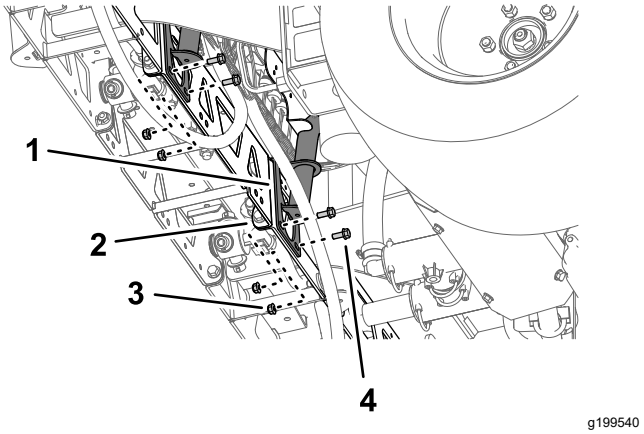

Figure 83

1. Bracket (valve mount)
2. Truss frame (center boom section)
3. Flange locknut (5/16 inch)
4. Flange head bolt (5/16 x 3/4 inch)

3. Assemble the valve mount to the truss frame with 4 bolts (5/16 x 3/4 inch) and 4 flange locknuts (5/16 inch).

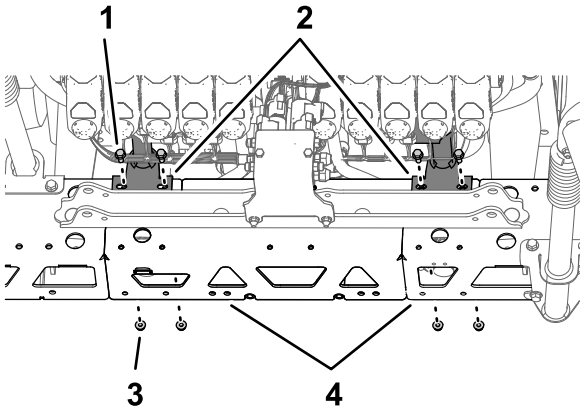

g199541

Figure 84

1. Flange head bolt (5/16 x 3/4 inch)
2. Bracket (valve mount)
3. Flange locknut (5/16 inch)
4. Truss frame (center spray section)

4. Repeat steps 2 through 3 for the other mount bracket of the valve mount at the other truss frame.
5. Torque the flange-head bolts and flange locknuts to 1978 to 2542 N·cm (175 to 225 in-lb).

Assembling the Hose to the Valve Manifold

1. Assemble the hose (1 x 16 inches) over the 90° flange fitting (1 inch).

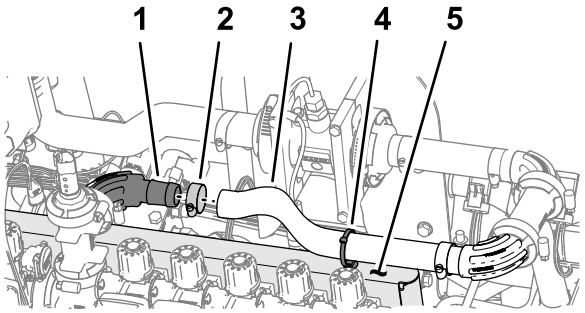

g281672

Figure 85

1. 90° flange fitting (1 inch)
2. Hose clamp
3. Hose (1 x 16 inches)
4. Push-in fastener (cable tie)
5. Valve mount

2. Secure the hose to the flange fitting with a hose clamp.
3. Assemble the cable tie/push-in fastener into the hole at the top of the valve mount.
4. Secure the cable tie/push-in fastener around the hose (1 x 16 inches).

Installing the Section Bypass Hoses

1. Remove the retainers from the sockets of the quick-connect fittings.
2. Assemble the quick-connect fitting of the bypass hose to the quick disconnect fitting at the bypass valve at section valve 10.

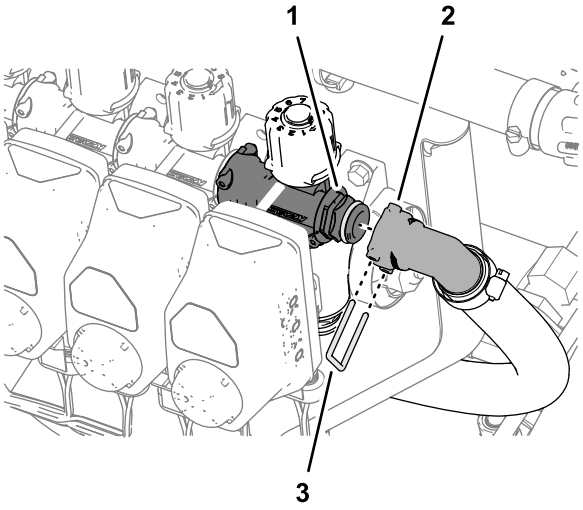

g281441

Figure 86

1. Quick disconnect fitting (bypass valve)
2. Socket—quick-connect fitting
3. Retainer

3. Secure the quick disconnect fittings for the bypass hose and the bypass valve with the retainer.
4. Repeat steps 1 through 3 for the quick disconnect fittings at section valve 1.

17

Connecting the Rear Harness at the Back of the Machine

No Parts Required

Connecting the Section Valve Electrical Connectors

1. Assemble the push-in fasteners of the valve actuator electrical-connectors into the holes in the valve mount.

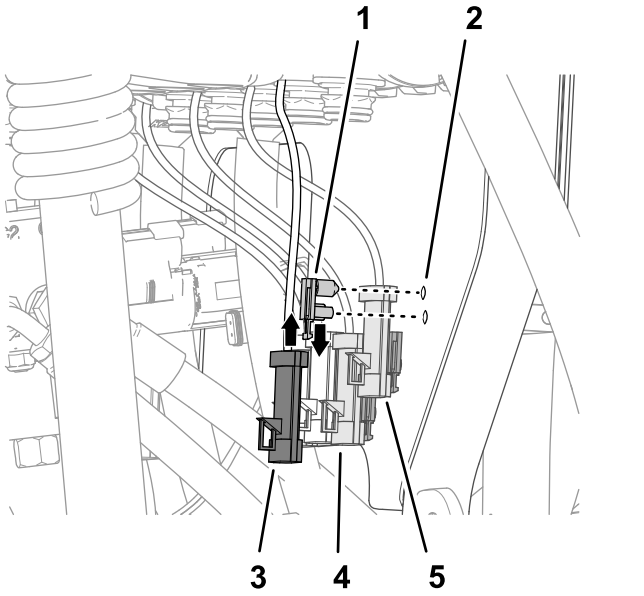

Figure 87

1. Push-in fastener (valve actuator electrical-connector)
2. Valve mount
3. 3-pin connector (valve actuator—position 10)
4. 3-pin connector (valve actuator—position 8)
5. 3-pin connector (valve actuator—position 9)

2. Connect 3-socket connector of the 89 cm (35 inch) rear harness branch labeled NOZZLE VALVE 1) into the 3-pin connector of the left most valve actuator (position 1).

   Note: The valve actuator positions 1 through 10 are arranged from left to right when standing behind the machine.

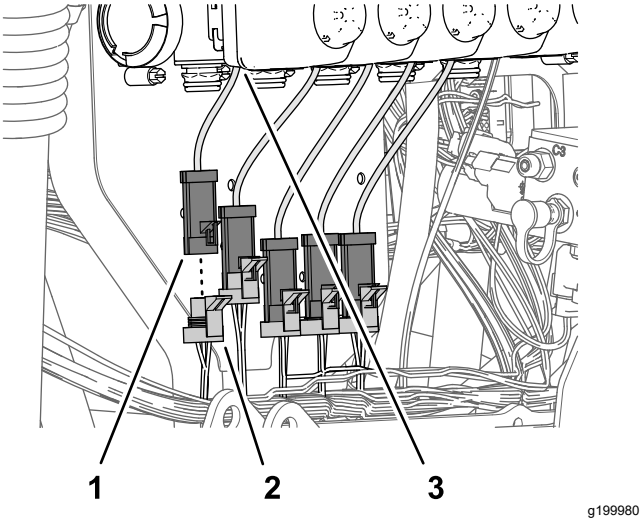

Figure 88

1. 3-pin connector (valve actuator—position 1)
2. 3-socket connector—89 cm (35 inch) rear harness branch (NOZZLE VALVE 1)
3. Valve actuator (position 1)

3. Connect 3-socket connector of the 89 cm (35 inch) rear harness branch NOZZLE VALVE 2) into the 3-pin connector of the valve actuator (position 2).
4. Connect the remaining 3-socket connectors of the 89 cm (35 inch) rear harness branch into the 3-pin connector of the valve actuators.

   Note: Ensure that the 3-socket connector are connected to the related valve actuator position.

Connecting the Rear Harness to the Pressure Transducer

Insert the 3-socket connector 61 cm (24 inch) branch of the rear harness labeled PRESSURE TRANSDUCER GREEN WEDGE into the 3-pin connector of the pressure transducer.

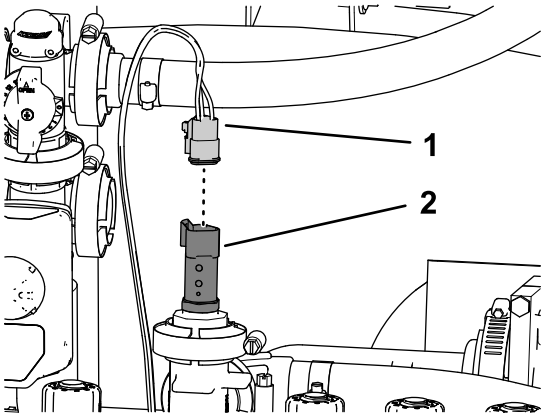

g200254

Figure 89

1. 3-socket connector—61 cm (24 inch) rear harness branch (PRESSURE TRANSDUCER GREEN WEDGE)
2. 3-pin connector (pressure transducer)

Connecting the Rear Harness to the ASC 10

1. Insert the 40-socket connector of the 102 cm (40 inch) branch of the rear harness into the 40-pin connector if the ASC 10 spray controller.

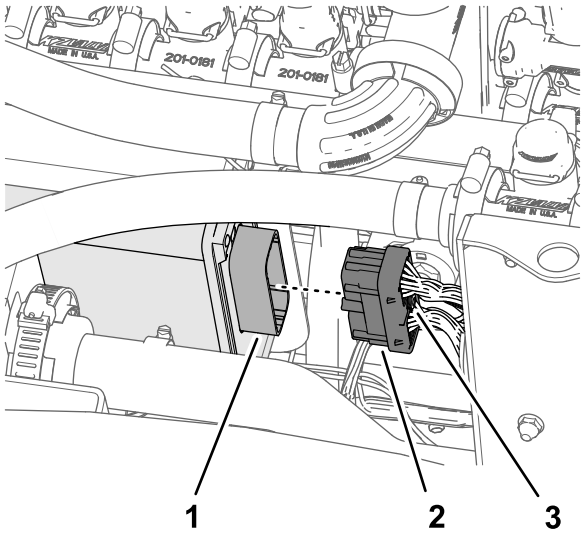

g281673

Figure 90

1. 40-pin connector (ASC 10 spray controller)
2. 40-socket connector (102 cm (40 inch) wire-harness branch)
3. Thumbscrew

2. Thread the thumb screw of the 40-socket connector into the ASC 10 connector by hand.
3. Insert the 4-socket connector of the rear harness labeled TO ASC 10 into the 4-pin connector of the ASC 10 spray controller.

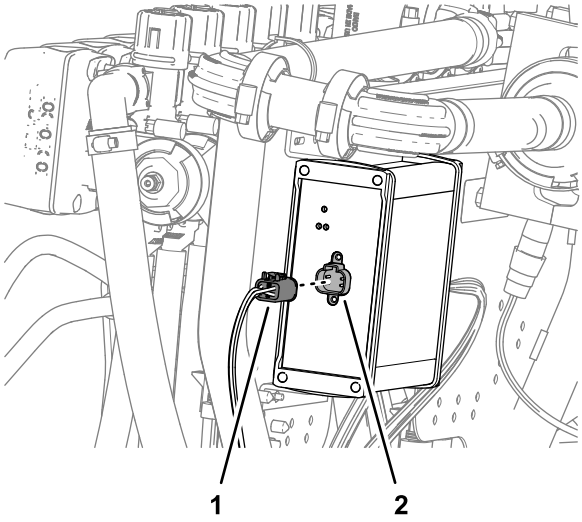

g281443

Figure 91

1. 4-socket connector (TO ASC 10)
2. 4-pin connector (ASC 10 spray controller)

18

Assembling the Boom-Lift Cylinders

Parts needed for this procedure:

4	Hydraulic hose (1/4 x 24-3/4 inches)

Assembling the Lift Cylinders

1. Align the fixed end of the lift cylinder to the 16 mm (5/8 inch) hole in the cylinder mount.

   Note: Ensure that the extend and retract ports of the cylinder align up.

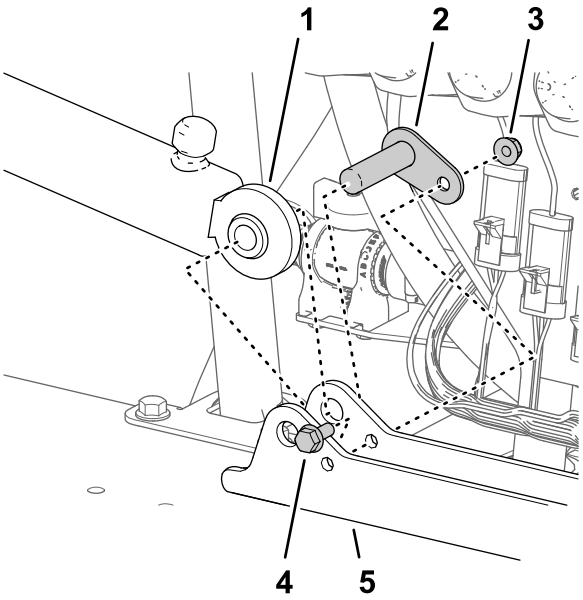

Figure 92

1. Lift cylinder (fixed end)
2. Pivot pin
3. Flange locknut (5/16 inch)
4. Flange-head bolt (5/16 x 3/4 inch)
5. Cylinder mount

2. Assemble the cylinder to the cylinder mount with the pivot pin, flanged-head bolt, and flange nut.
3. Torque the bolt and nut to 1978 to 2542 N·cm (175 to 225 in-lb).
4. Repeat steps 1 through 3 for the other lift cylinder at the other side of the cylinder mount.

Installing the Lift-Cylinder Hoses

1. Loosely assemble a new hydraulic hose (1/4 x 24-3/4 inches) between the extend port of the left boom-lift cylinder and port C3 of the boom-lift manifold.

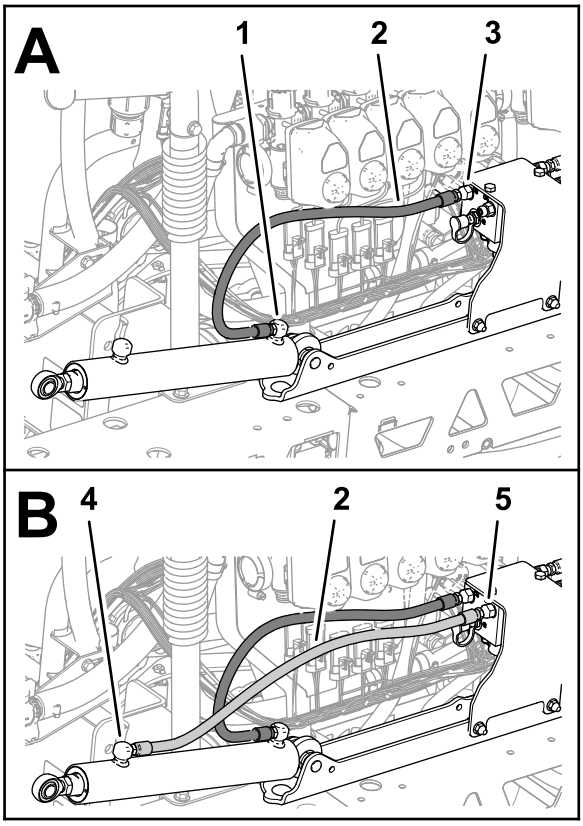

Figure 93

1. Extend port (left boom-lift cylinder)
2. Hydraulic hose (1/4 x 24-3/4 inches)
3. Port C3 (boom-lift manifold)
4. Retract port (left boom-lift cylinder)
5. Port C4 (boom-lift manifold)

2. Loosely assemble a new hydraulic hose (1/4 x 24-3/4 inches) between the retract port of the left boom-lift cylinder and port C4 of the boom-lift manifold.
3. Loosely assemble a new hydraulic hose (1/4 x 24-3/4 inches) between the extend port of the right boom-lift cylinder and port C1 of the boom-lift manifold.

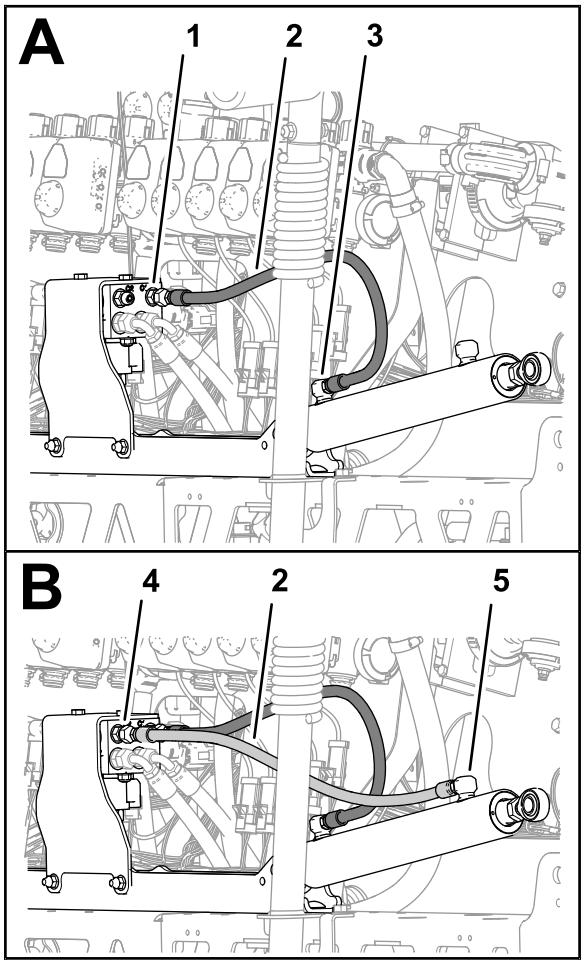

g200076

Figure 94

1. Port C1 (boom-lift manifold)
2. Hydraulic hose (1/4 x 24-3/4 inches)
3. Extend port (right boom-lift cylinder)
4. Port C2 (boom-lift manifold)
5. Retract port (right boom-lift cylinder)

4. Loosely assemble a new hydraulic hose (1/4 x 24-3/4 inches) between the retract port of the right boom-lift cylinder and port C2 of the boom-lift manifold.
5. Torque the hose fittings at the extend and retract ports of the lift cylinders to 21 to 26 N·m (15 to 19 ft-lb).
6. Torque the swivel nuts of the hoses at the boom-lift manifold to 24 to 30 N·m (17 to 22 ft-lb).

19

Installing the Outer-Boom Sections

Parts needed for this procedure:

4	Nylon-flange bushing
1	Supply-hose assembly 188 cm (74 inches)
1	Supply-hose assembly 234 cm (92 inches)
1	Supply-hose assembly 279 cm (110 inches)

Removing the Turrets from the Outer-Boom Sections

1. Cut the hose between 2 turrets.

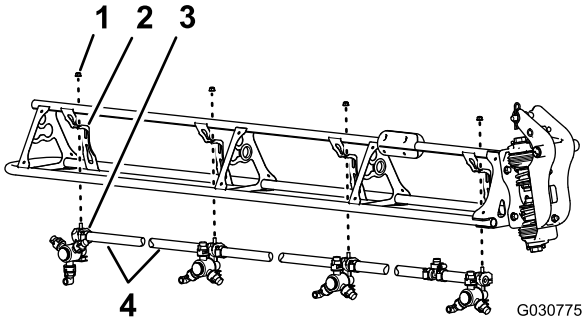

g030775

Figure 95

1. Flange locknut (5/16 inch)
2. Turret mount
3. Turret
4. Hose (3/4 inch inside diameter)

2. Remove the flange locknut (5/16 inch) that secures the turret to the turret mount.
3. Repeat the steps for the other 3 turrets.

   Note: Retain the flange locknut and turrets.

   Note: Discard the hoses, clamps, and T-fitting.
4. Repeat the steps for the other outer-boom section.
5. Remove the stainless steel screws (#12 x 1-1/4 inches) that secures the upper clamp halves and the double or single barbed-hose shanks (3/4 inch) to the body of each of the sprayer nozzle, and remove the barbed-hose shanks.

   Note: The hex-head bolt (5/16 x 3/4 inch—stainless steel) will separate from the upper clamp half when you open the clamp, retain the bolt for installation.

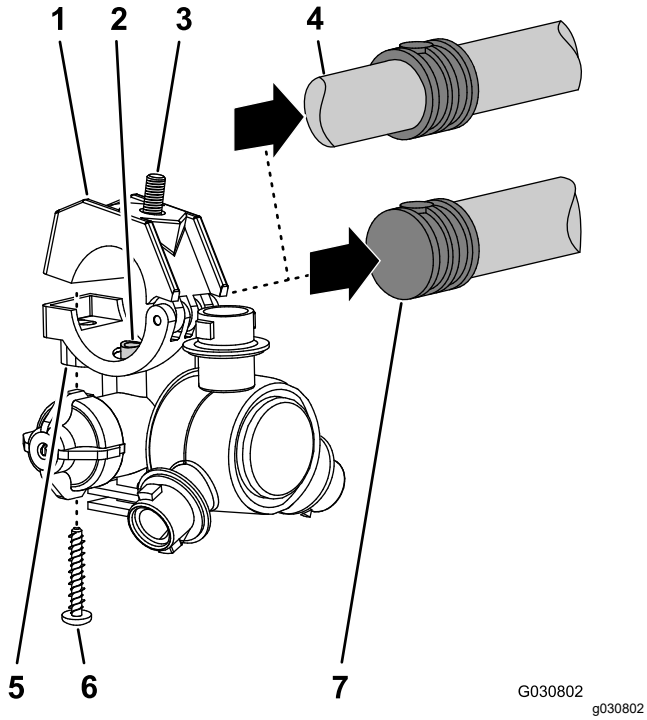

Figure 96

1. Upper clamp half
2. Transfer tube
3. Hex-head bolt (5/16 x 3/4 inch—stainless steel)
4. Double barbed-hose shank (3/4 inch hose)
5. Turret
6. Stainless steel screw (#12 x 1-1/4 inches)
7. Single barbed-hose shank (3/4 inch hose)

Assembling the Outer-Boom Sections to the Machine

Lift equipment capacity: 46 kg (100 lb)

1. Using lift equipment with the specified capacity, raise the outer boom.
2. Insert a nylon-flange bushing into the 31.8 mm (1-1/4 inches) hole at each side of the pivot fitting.

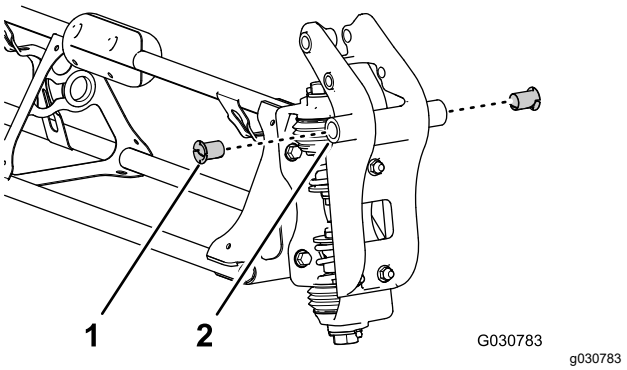

Figure 97

1. Nylon-flange bushing
2. Pivot fitting (outer-spray section)

3. Align the bushings in the pivot fitting with the holes in the flanges of the pivot bracket at the end of the center-boom section.

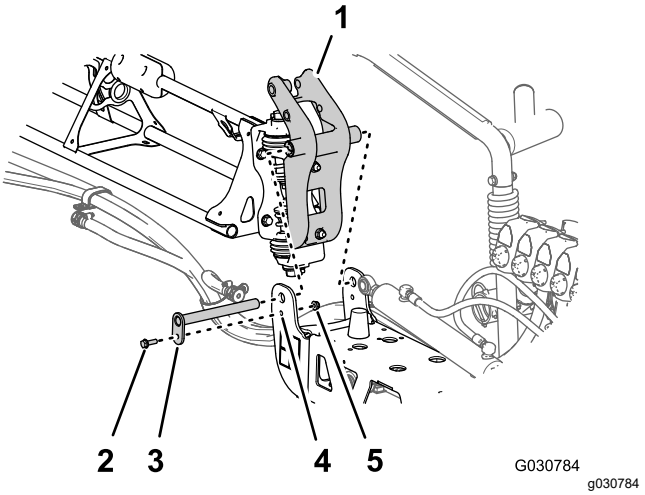

Figure 98

1. Pivot fitting (outer-spray section)
2. Flange bolt (5/16 x 1 inch)
3. Pivot pin
4. Pivot bracket (center-spray section)
5. Flange locknut (5/16 inch)

4. Assemble the pivot fitting to the pivot bracket with the pivot pin, flange bolt (5/16 x 1 inch), and flange locknut (5/16 inch).
5. Torque the bolt and nut to 1978 to 2542 N·cm (175 to 225 in-lb).
6. Align the rod end of the lift cylinder with the hole 25 mm (1 inch) in the horn of the pivot fitting.

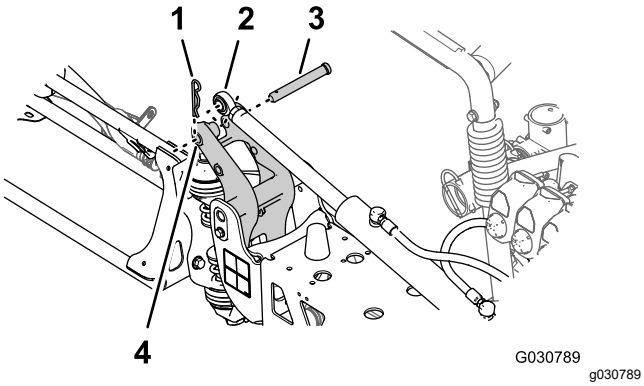

Figure 99

1. Hairpin
2. Rod end (lift cylinder)
3. Clevis pin
4. 25 mm (1 inch) hole—horn of the pivot-fitting

7. Secure the lift cylinder to the pivot fitting with the clevis pin and hairpin.
8. Repeat steps 1 through 7 at the outer-boom section at the other side of the machine.

20

Installing the Hoses

Parts needed for this procedure:

2	Supply hose 279 cm (110 inches)
2	Supply hose 234 cm (92 inches)
4	Supply hose 188 cm (74 inches)
2	Supply hose 81 cm (32 inches)

Assembling the Hoses to Section Valves

Note: Ensure that the barbed fitting is fully seated onto the coupler.

Secure the barbed fittings to the couplers with a retainer.

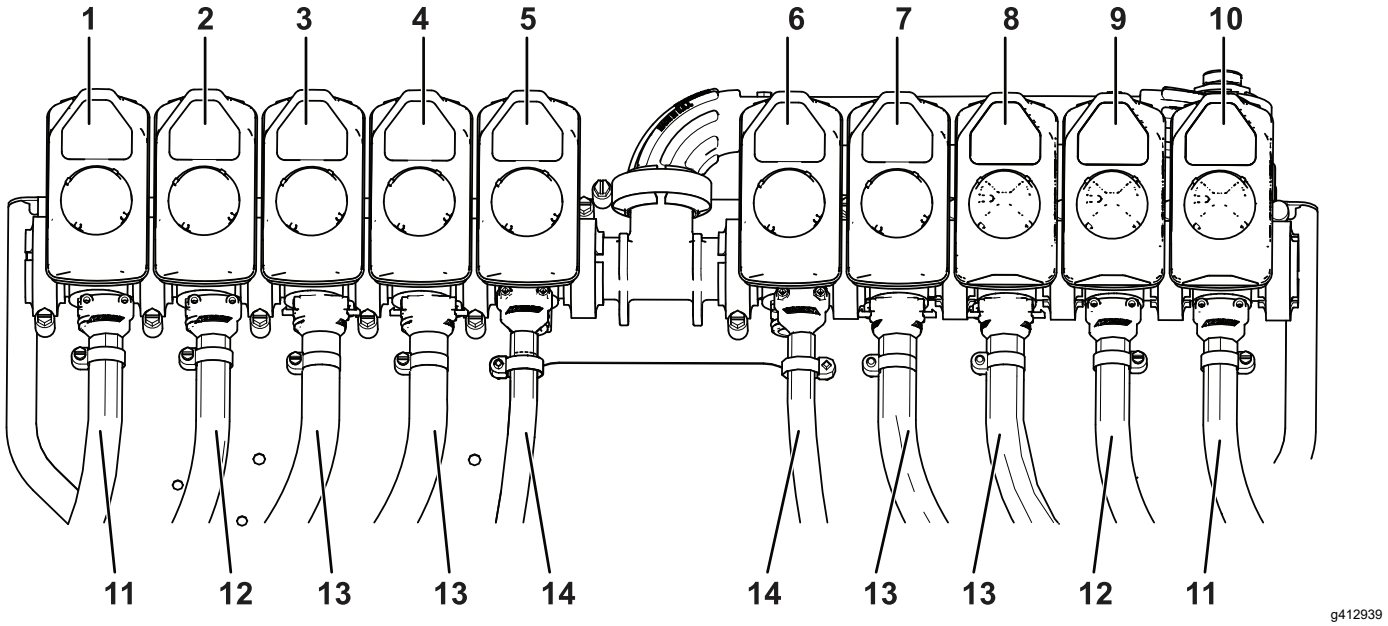

Figure 100

1. Section valve 1
2. Section valve 2
3. Section valve 3
4. Section valve 4
5. Section valve 5
6. Section valve 6
7. Section valve 7
8. Section valve 8
9. Section valve 9
10. Section valve 10
11. Supply hose 279 cm (110 inches)
12. Supply hose 234 cm (92 inches)
13. Supply hose 188 cm (74 inches)
14. Supply hose 81 cm (32 inches)

Note: The supply hose assembly 81 cm (32 inches) has a T-fitting with 2 branch hoses and 2 single barbed-hose shanks.

Boom Section	Section valve	Nozzle	Supply Hose
Left	1	1	279 cm (110 inches)
	2	2	234 cm (92 inches)
	3	3	188 cm (74 inches)
	4	4	188 cm (74 inches)
Center	5	5 and 6	81 cm (32 inches)
	6	7 and 8	81 cm (32 inches)
Right	7	9	188 cm (74 inches)
	8	10	188 cm (74 inches)
	9	11	234 cm (92 inches)
	10	12	279 cm (110 inches)

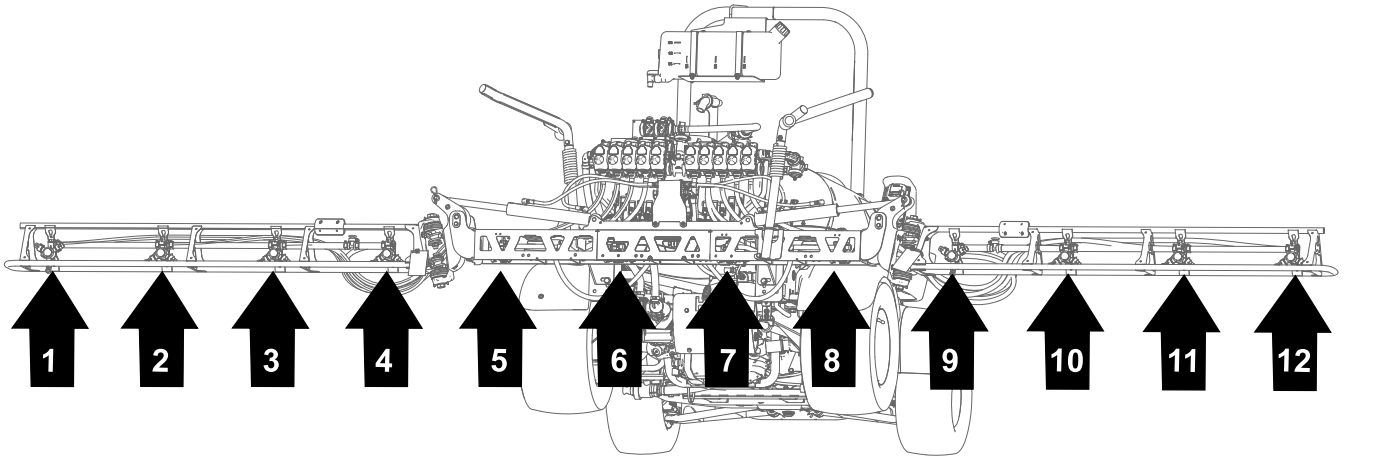

g421741

Figure 101
Nozzle Locations

Routing the Hoses

Use Figure 102 through Figure 106 to route the hoses. Only one side is shown. The routing is the same for both sides.

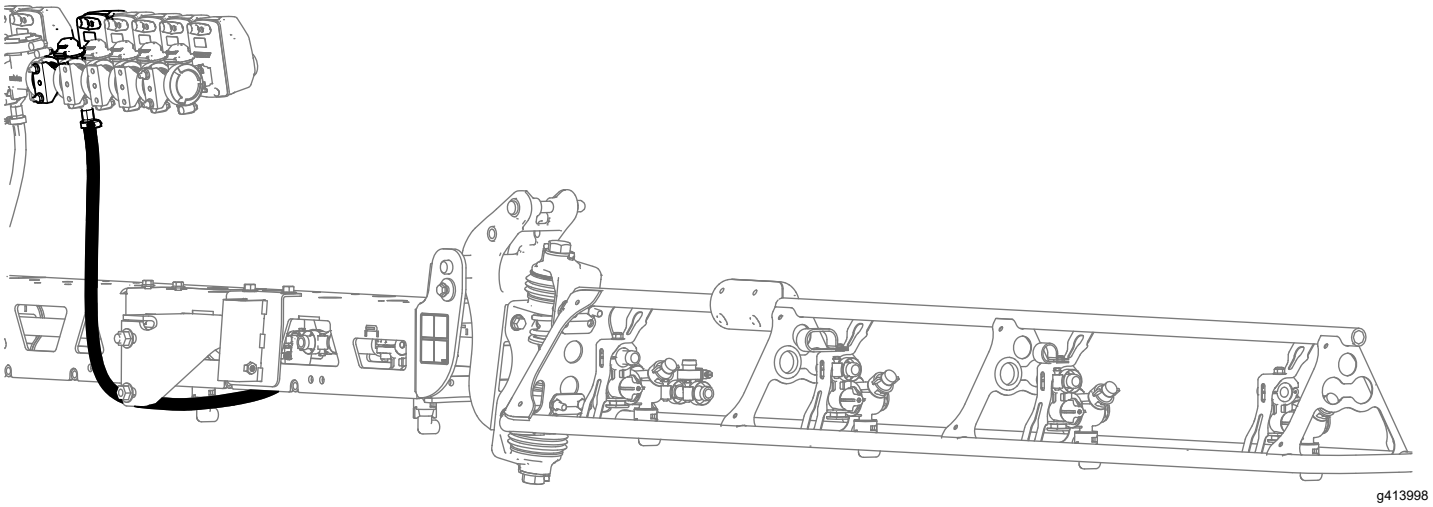

Figure 102
81 cm (32 inch) hose

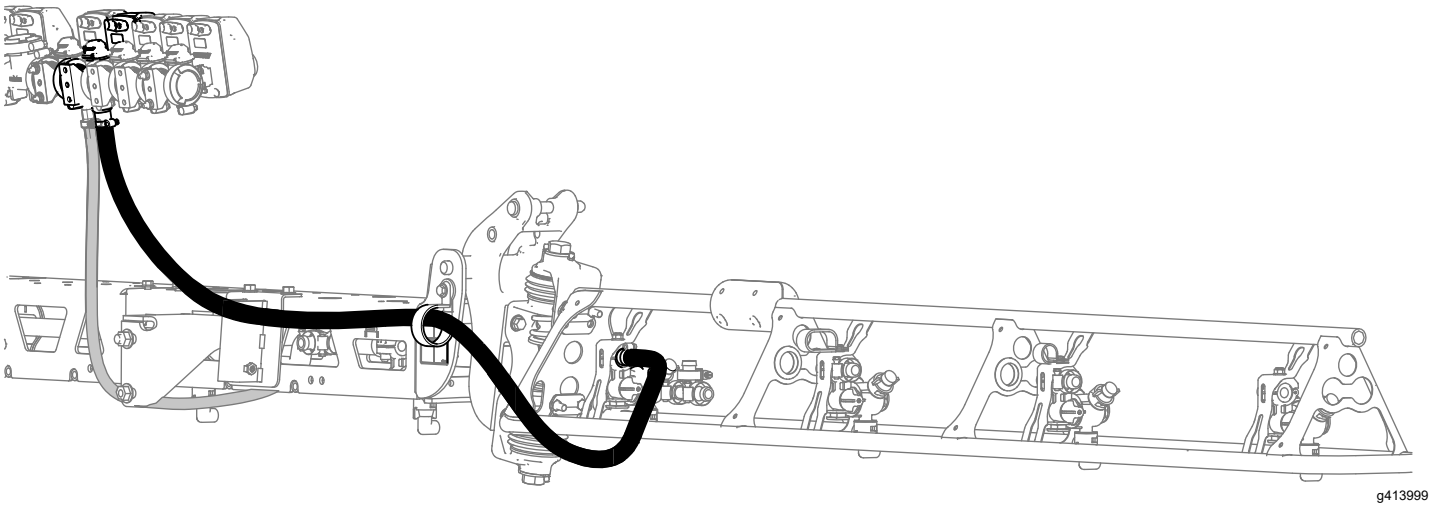

Figure 103
188 cm (74 inch) hose

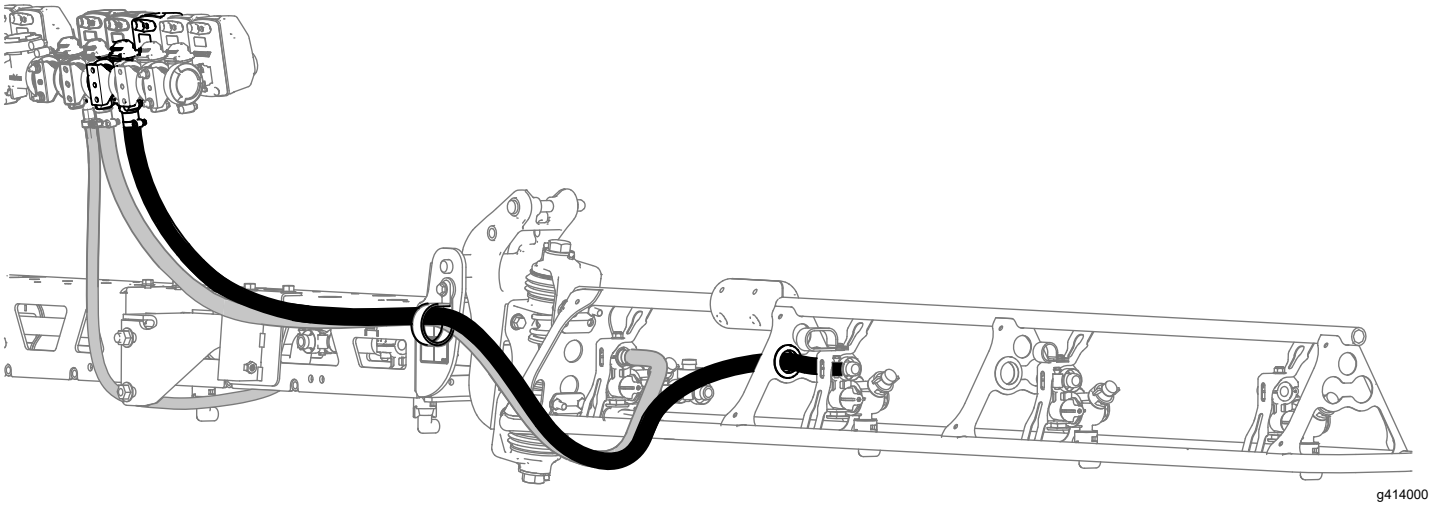

Figure 104
188 cm (74 inch) hose

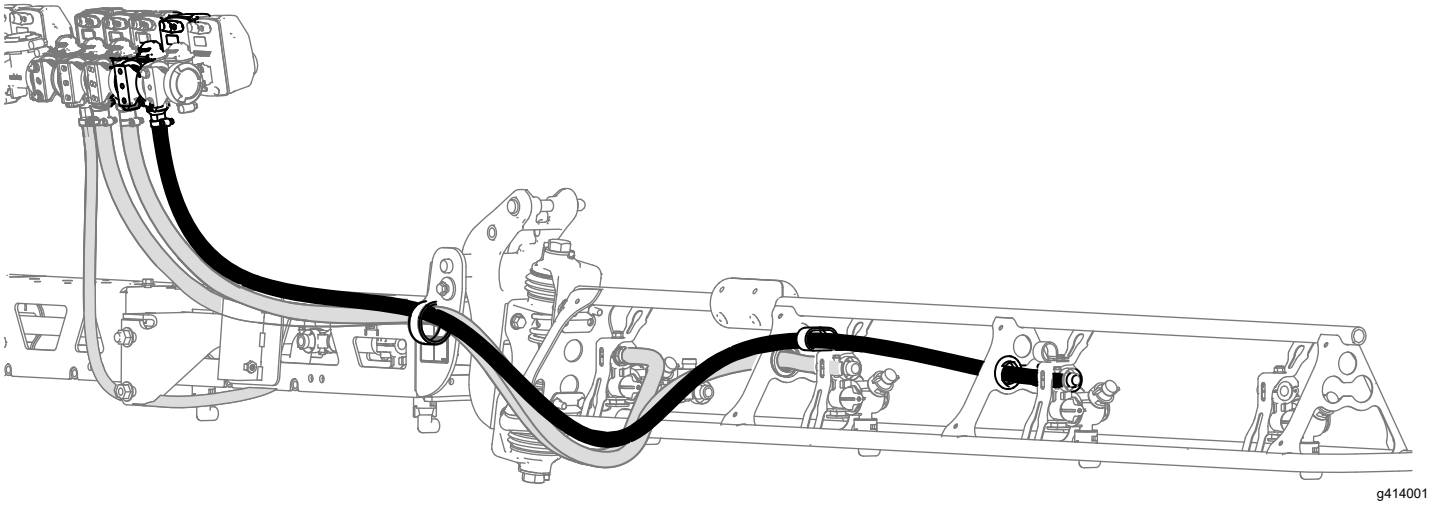

Figure 105
234 cm (92 inch) hose

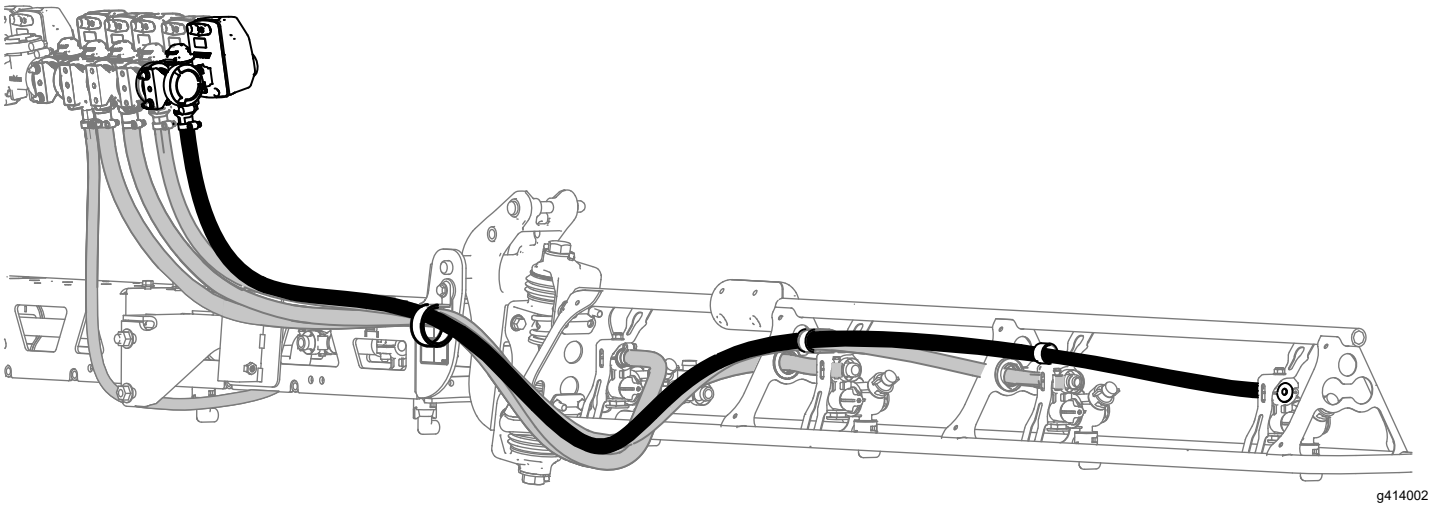

Figure 106
279 cm (110 inch) hose

Installing the Turrets at the Outer-Boom Sections

1. Align the transfer tube in the saddle of a turret [with the hole in the side of the single barbed-hose shank (1/2 inch)].

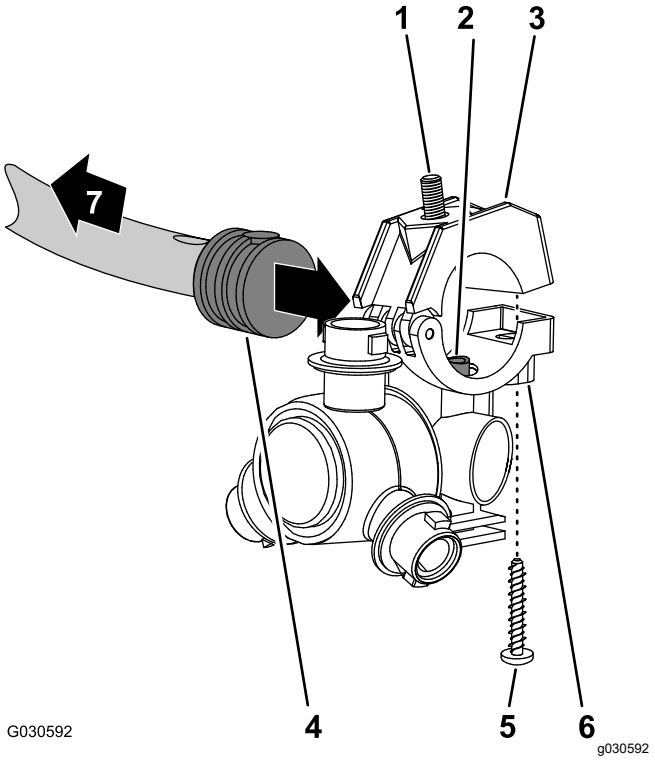

Figure 107

1. Hex-head bolt (5/16 x 3/4 inch—stainless steel)
2. Transfer tube
3. Upper clamp half
4. Single barbed-hose shank (1/2 inch)
5. Stainless steel screw (#12 x 1-1/4 inches)
6. Turret
7. Toward the spray section

2. Close the upper clamp half around the barbed-hose shank and secure the clamp half and turret body with the stainless steel screw (#12 x 1-1/4 inches); torque the stainless steel screw to 14 to 18 N·m (20 to 25 in-lb).

   Note: Ensure that the hex-head bolt (5/16 x 3/4 inch) is seated in the recess in the upper clamp half when closing the clamp.

3. Secure the turrets to the mounts using the previously removed flange locknuts (5/16 inch).

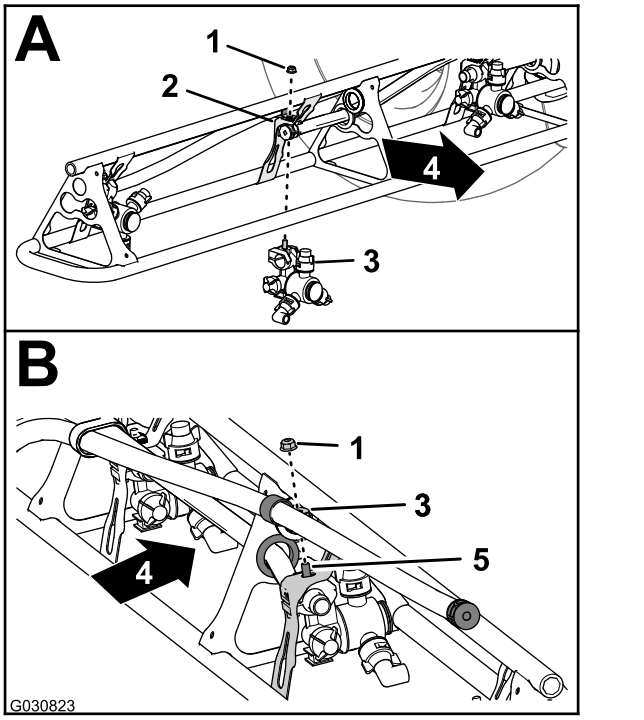

Figure 108

1. Flange locknut (5/16 inch)
2. Turret mount
3. Turret
4. Back of the machine
5. Hex-head bolt (stainless steel—5/16 x 3/4 inch)

4. Torque the flange locknut to 1978 to 2542 N·cm (175 to 225 in-lb).

21

Connecting the Pressure-Sense Tube for the Dash Gauge

No Parts Required

Connecting the Pressure-Sense Tube for the Dash Gauge

1. Align the end of the pressure-sense tube (plastic) for the pressure gauge in the dash with the locking collar for the tube coupler.

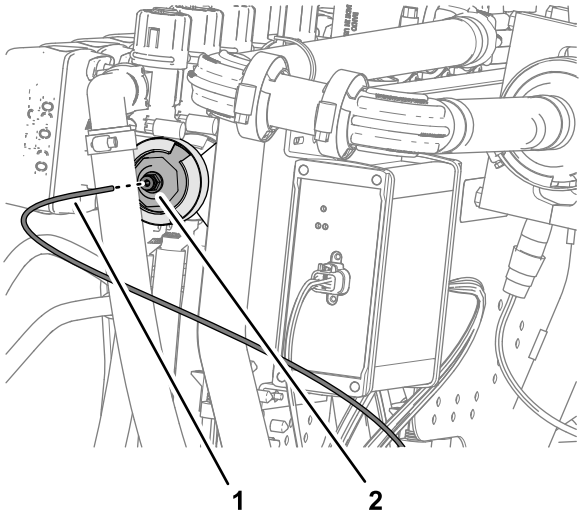

Figure 109

1. Pressure-sense tube (dash-pressure gauge)
2. Locking collar (tube coupler)

2. Insert the sense tube into the locking collar until the tube is fully seated.

22

Installing the Navigation Receiver

Parts needed for this procedure:

1	Navigation-receiver plate
1	Receiver mount
1	Bolt (3/8 x 3-1/4 inches)
1	Lock washer (3/8 inch)
1	Washer (3/8 x 13/16 inch)
1	Spacer (3/8 x 1 inch)
1	Flange locknut (3/8 inch)
1	Flange-head bolt (5/16 x 3/4 inch)
1	Flange locknut (5/16 inch)
2	Flange-head bolt (3/8 x 1-1/2 inches)
2	Spacer (3/8 x 7/16 inch)
1	Navigation receiver
1	Modem antenna bracket
3	Hex-head bolt (5 x 16 mm)
3	Washer (5 mm)

Assembling the Navigation Receiver Mount

1. Secure the receiver plate to the receiver mount using 1 bolt (3/8 x 3-1/4 inches), 1 lock washer, 1 washer, 1 spacer (3/8 x 1 inch), and 1 locknut (3/8 inch).

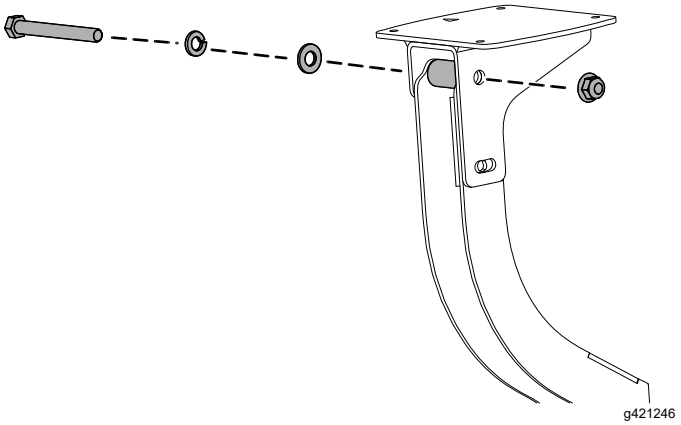

Figure 110

2. Assemble the flange-head bolt (5/16 x 3/4 inch) and flange locknut (5/16 inch) through the

smaller hole in the receiver mount and the slot in the receiver plate.

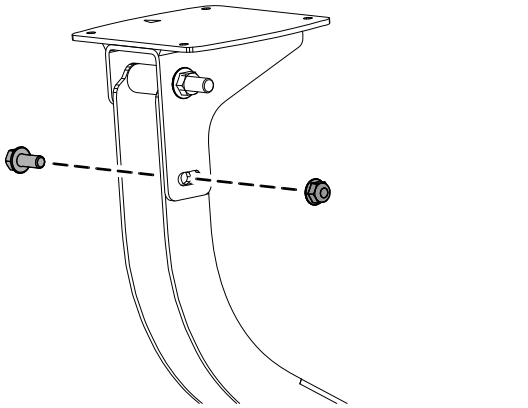

g421247

Figure 111

3. Tighten the bolts and nuts so that you can rotate the receiver plate with slight resistance.

Installing the Navigation Receiver Mount to the Machine

1. Assemble the receiver mount and spacer (3/8 x 7/16 inch) to the roll bar with the flange-head bolt (3/8 x 1-1/2 inches).

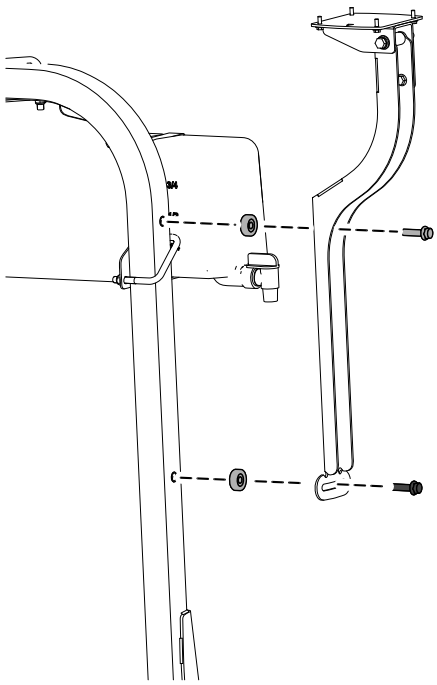

g421248

Figure 112

2. Tighten the bolts so that you can rotate the receiver plate with slight resistance.
3. Level the receiver plate left to right.

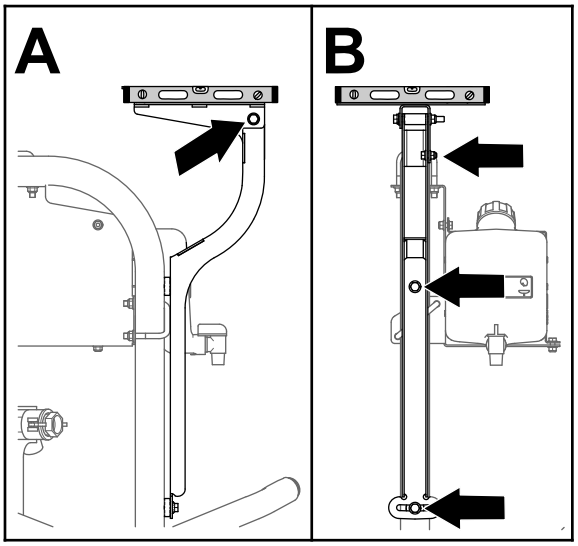

g200675

Figure 113

4. Torque the flange-head bolt (5/16 x 3/4 inch) and flange locknut (5/16 inch) to 1978 to 2542 N·cm (175 to 225 in-lb).
5. Level the receiver plate front to back.
6. Torque the bolt (3/8 x 3-1/4 inches) and flange locknut (3/8 inch) to 37 to 45 N·m (27 to 33 ft-lb).

Assembling the Navigation Receiver to the Machine

1. Install the receiver onto the mount using 4 bolts (5 x 16 mm) and 4 washers.

   Note: Ensure that both arrows are pointing toward the front of the machine.

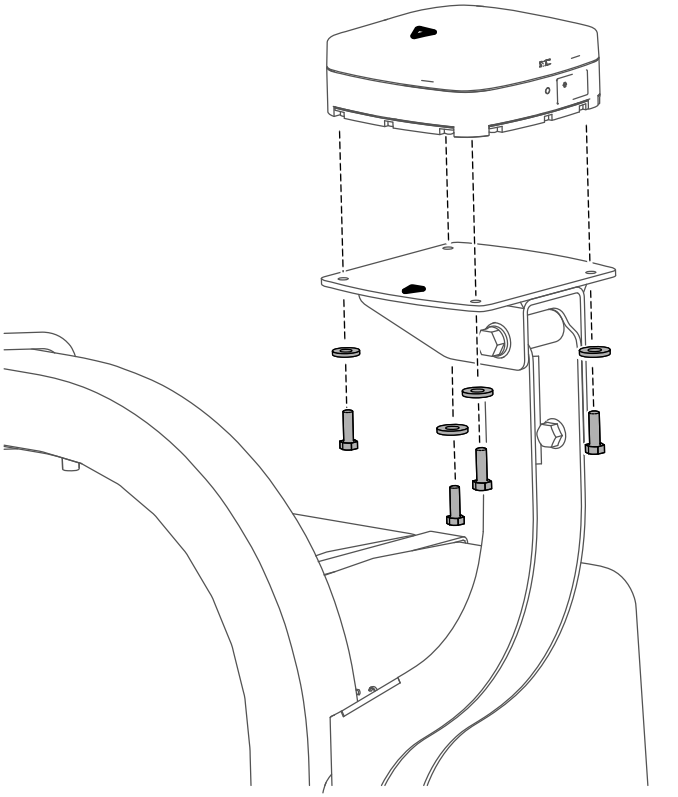

g421249

Figure 114

2. Torque the 3 bolts to 576 to 712 N·cm (51 to 63 in-lb).

23

Installing the Modem Antennas to the Machine

Parts needed for this procedure:

1	Antenna mount
2	Rivet
2	Magnet
1	Modem antenna
1	High gain antenna

Installing the Modem Antennas

1. Install the modem antenna bracket to the roll bar.

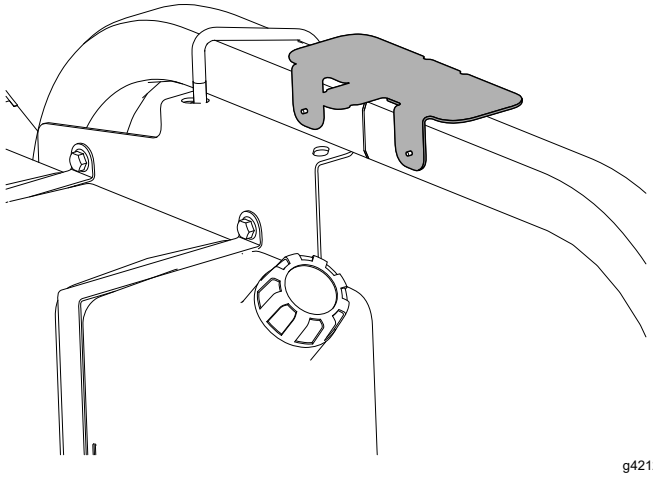

g421243

Figure 115

2. Clean any grease or oil from the antenna mount surface.
3. Remove the backing from the double sided adhesive liner and adhere the antenna to the mount.

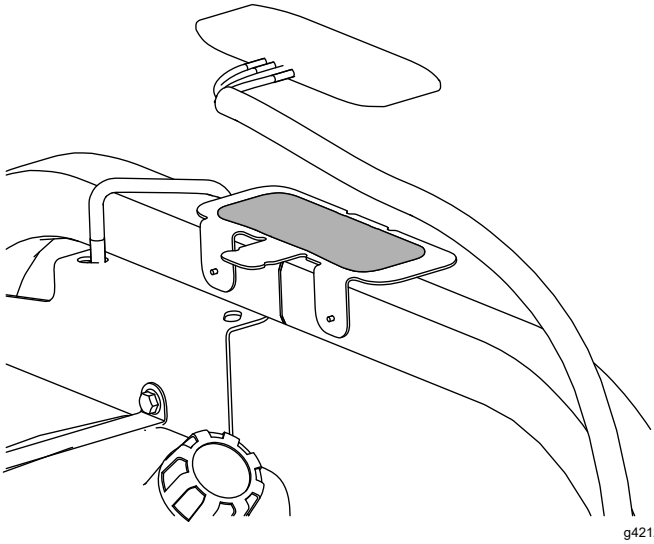

g421244

Figure 116

4. Secure the antenna and wire harness to the mount with 3 cable ties.

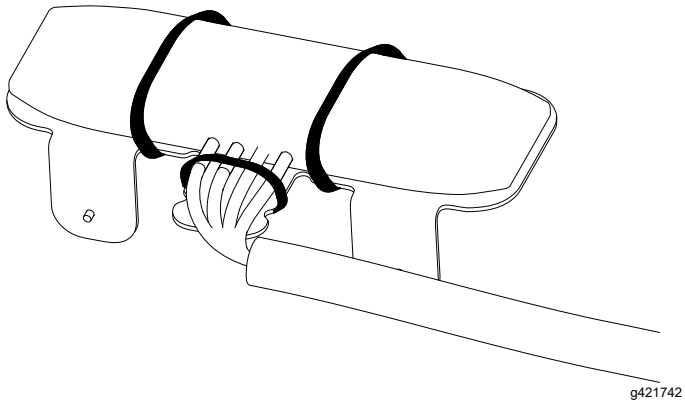

g421742

Figure 117

5. Place the high gain antenna next to the other antenna on the roll bar.

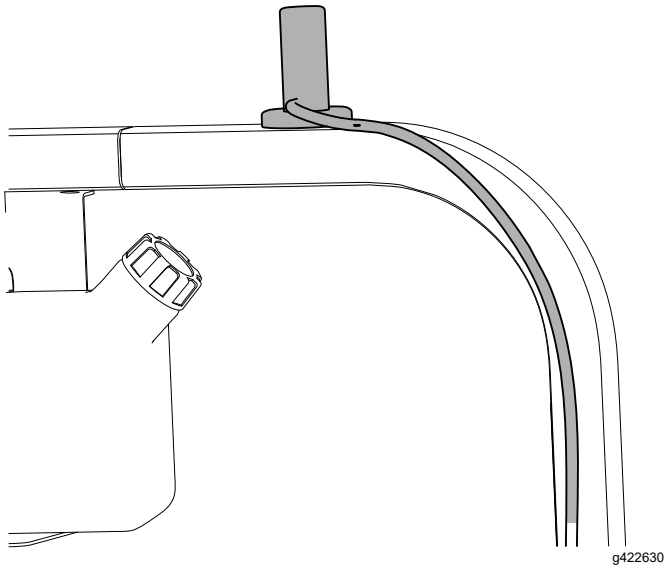

g422630

Figure 118

Routing the Modem-Antenna Harnesses

1. Route the modem-antenna harnesses to the right, along the roll bar.



g422945

Figure 119

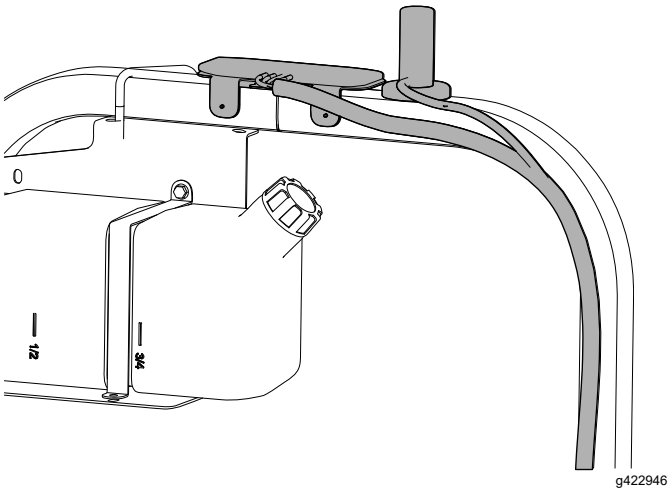

g422946

Figure 120

2. Route the harness down and forward.

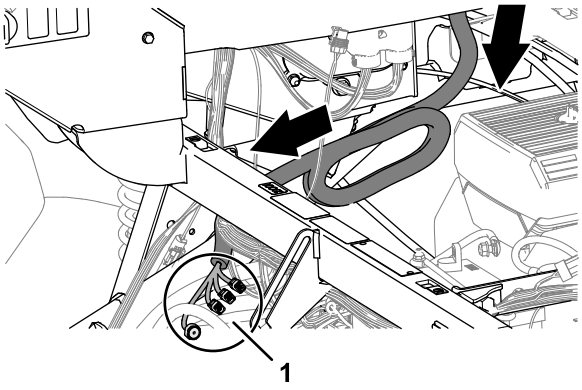

g314602

Figure 121

1. Connectors (modem-antenna harness)

24

Installing the Wire Harnesses for the Navigation Components

Parts needed for this procedure:

1	Harness adapter
1	Data and electrical harness
8	Cable tie

Identifying the Navigation-Data and Electrical Harness

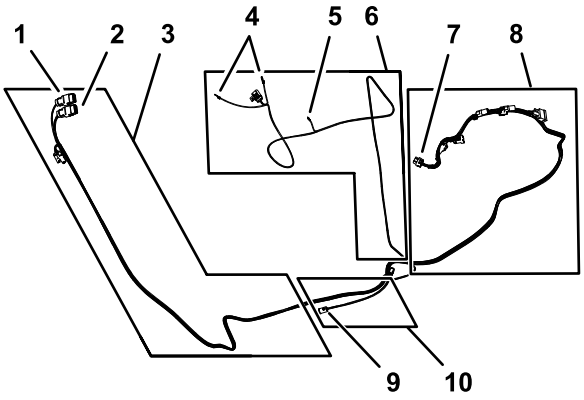

g310848

Figure 122

1. 12-socket connector—navigation receiver AGI4 A CONNECTOR (GREY)
2. 12-socket connector—navigation receiver AGI4 B CONNECTOR (BLACK)
3. 302 cm (119 inches) data-harness branch (navigation receiver)
4. Ring terminals (to battery positive and battery negative)
5. Socket connector (switched power)
6. 270.5 cm (106-1/2 inch) power-harness branch
7. 26-socket connector—(control console)
8. 226 cm (89 inches) data-harness branch (control console)
9. 4-pin connector (rear harness interface—CAN 2 ASC 10 BUS)
10. 34 cm (13-1/2 inches) data-harness branch (rear harness interface)

Connecting the Navigation-Data and Electrical Harness to the Navigation Receiver

1. Route the 302 cm (119 inches) branch of the navigation-data and electrical harness along the right ROPS tube with the 12-socket connector **(gray)** and 12-socket connector **(black)** up toward the navigation receiver.
2. Connect the 2 connectors at the long face of the 12-socket connector of the data harness labeled AGI4 A KEY (GREY) with the 2 connector slots into the adapter harness.

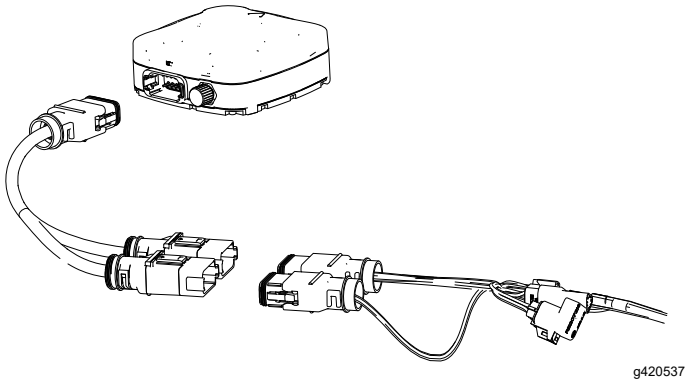

g420537

Figure 123

3. Plug the adapter harness into the receiver.

Routing the Navigation-Data and Electrical Harness to the Right Side of the Machine

1. Route the navigation-data and electrical harness along the right roll bar tube and the modem-antenna harness to the cross member for the seat support.

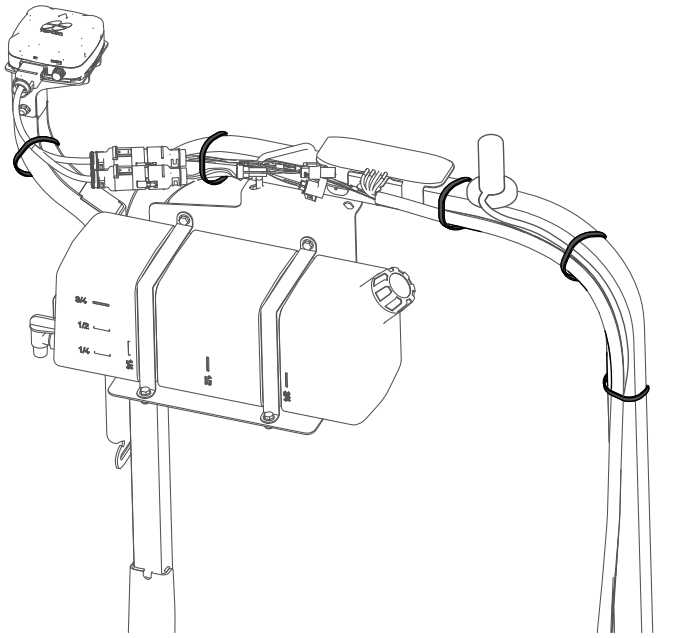

g421251

Figure 124

2. Secure the harnesses to the roll bar with cable ties.

   Note: Ensure that the harness is slack between the 12-socket connectors and the cable tie.
3. Route the 227 cm (89-1/2 inches) branch of the navigation-data and electrical harness along the bottom of the control console of the machine.

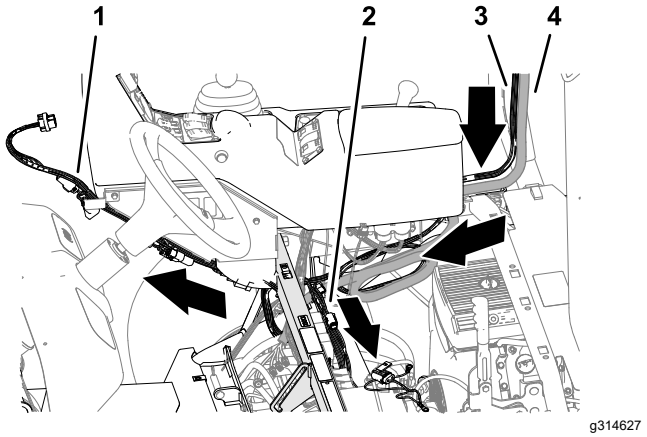

g314627

Figure 125

1. 227 cm (89-1/2 inches) harness branch (navigation-data and electrical harness)
2. 258 cm (101-1/2 inch) power-harness branch (navigation-data and electrical harness)
3. Navigation-data and electrical harness
4. Modem-antenna harness

4. Route the 258 cm (101-1/2 inch) branch of the navigation-data and electrical harness across the shock-support tube and toward the battery.

Connecting the CAN 2/ASC 10 Power Connector

1. Adhere the magnetic mount of the rear harness to the right, upper tube frame of the machine.

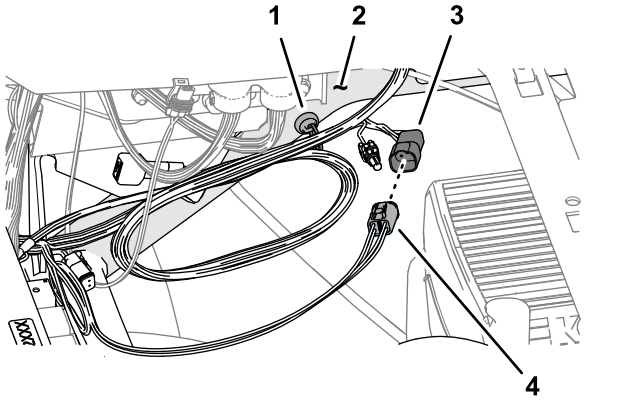

Figure 126

1. Magnetic mount (rear harness)
2. Right, upper tube frame
3. 4-socket connector (labeled ASC10 PWR & CAN FROM X30—rear harness)
4. 4-pin connector (labeled CAN 2 ASC 10 BUS—data harness)

2. Plug the 4-pin connector labeled CAN 2 ASC 10 BUS of the data harness into the 4-socket connector labeled ASC10 PWR & CAN FROM X30 of the rear harness.

25

Installing the Display

Parts needed for this procedure:

1	Display mount
3	Flange-head bolt (6 x 12 mm)
2	U-bolt (5/16 inch)
4	Flange-head bolt (5/16 x 3/4 inch)
8	Flange locknut (5/16 inch)
1	Ball mount
1	Display Arm

Removing the Steering Wheel

1. Mark the position of the steering wheel to the steering valve with a piece of tape.

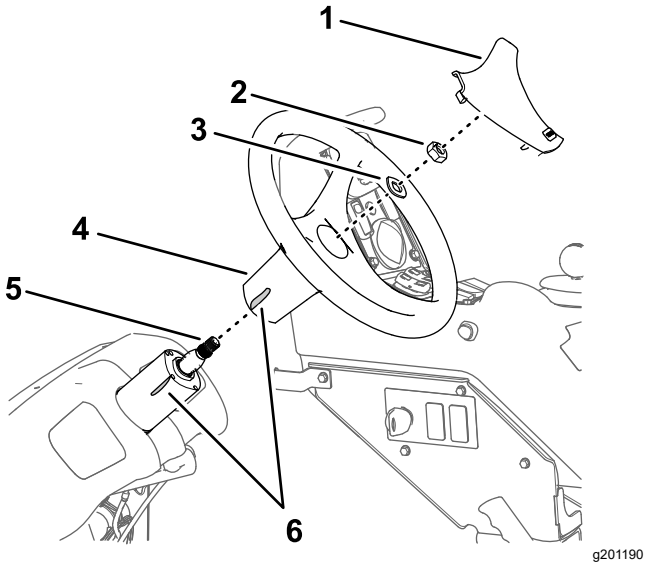

Figure 127

1. Steering-wheel cover
2. Nut (5/8 inch)
3. Washer (5/8 inch)
4. Steering wheel
5. Shaft (steering valve)
6. Tape

2. Remove the cover from the steering wheel.
3. Remove the nut (5/8 inch) and washer (5/8 inch) that secure the steering wheel to the steering valve, and remove the steering wheel.

Installing the Display Mount

1. Align the display mount to the machine as shown.

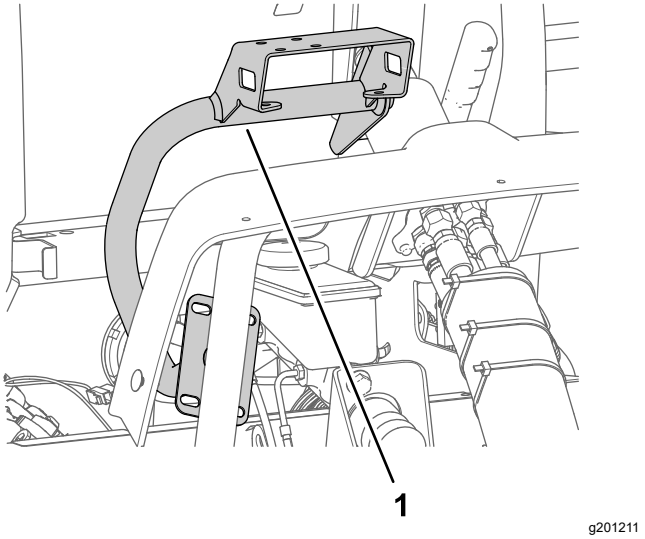

Figure 128

1. Monitor mount

2. Assemble the display mount to the housing of the steering valve with the 3 flange-head bolts (6 x 12 mm).

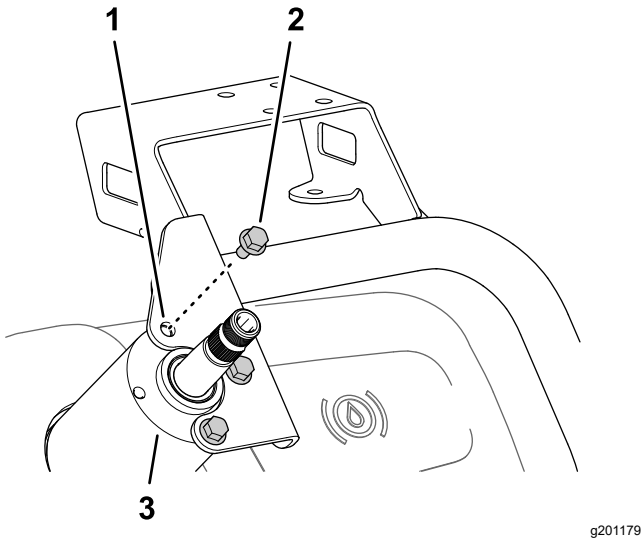

Figure 129

1. Monitor mount
2. Flange-head bolt (6 x 12 mm)
3. Housing (steering valve)

3. Assemble the plate of the display mount to the support tube of the machine chassis with the 2 U-bolts and 4 flange locknuts (5/16 inch).

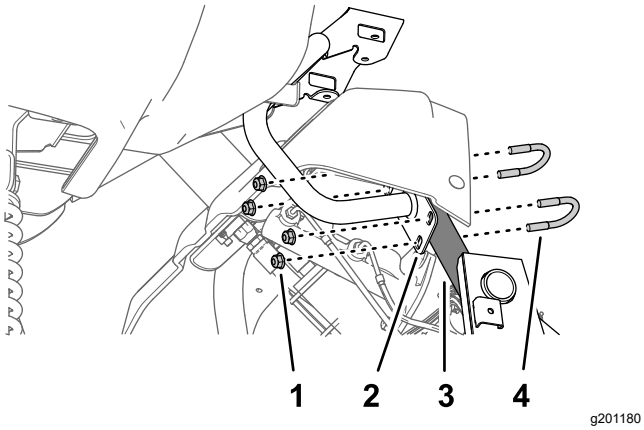

Figure 130

1. Flange locknut (5/16 inch)
2. Plate (display mount)
3. Support tube (machine chassis)
4. U-bolt (5/16 inch)

4. Torque the 3 flange-head bolts (6 x 12 mm) at the steering valve to 972 to 1198 N·cm (86 to 106 in-lb); At the support tube, torque the flange locknuts to 1978 to 2542 N·cm (175 to 225 in-lb).

Installing the Steering Wheel

1. Align the tape mark on the steering wheel to the tale mark on the housing of the steering valve.

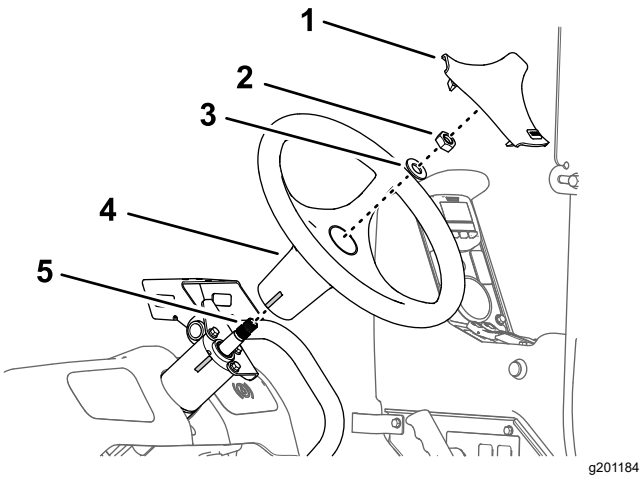

Figure 131

1. Steering-wheel cover
2. Nut (5/8 inch)
3. Washer (5/8 inch)
4. Steering wheel
5. Shaft (steering valve)

2. Assemble the steering wheel onto the shaft of the steering valve with the previously removed washer (5/8 inch) and nut (5/8 inch).
3. Torque the nut to 206 to 254 N·m (152 to 188 ft-lb).
4. Install the cover.

Installing the Display to the Mount

1. Assemble the ball mount to the bracket for the display mount with the 4 flange-head bolts (5/16 x 3/4 inch) and 4 flange locknuts (5/16 inch).

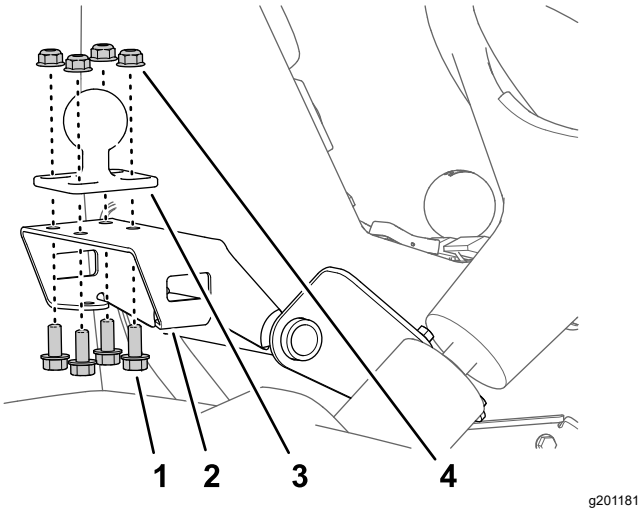

Figure 132

1. Bracket (display mount)
2. Flange-head bolt (5/16 x 3/4 inch)
3. Ball mount
4. Flange locknut (5/16 inch)

2. Torque the bolts and nuts to 1978 to 2542 N·cm (175 to 225 in-lb).

3. Assemble the ball fitting of the display and the ball mount on the machine to the long display arm.

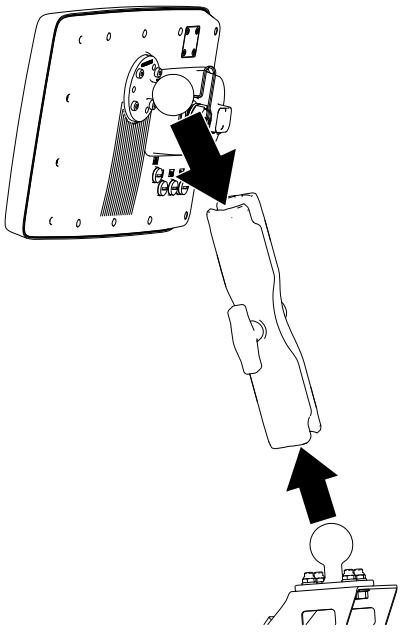

g422949

Figure 133

4. Adjust the display so that it is viewable from the machine operator's position and tighten the display arm knob by hand.

26

Connecting the Data Cable to the Display

No Parts Required

Routing and Connecting the Navigation-Data and Electrical Harness to the Display

1. Route the 227 cm (89-1/2 inch) branch of the navigation-data and electrical harness (the branch with the 26-socket connector) up and along the support tube for the display.
2. Plug the navigation data harness into the monitor.

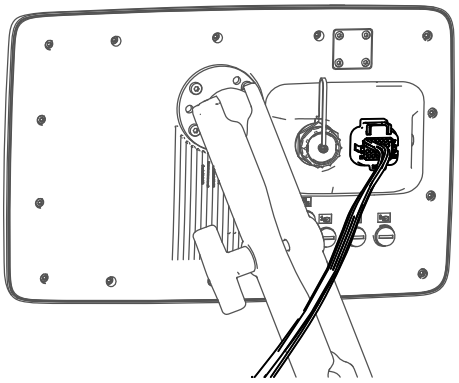

g422947

Figure 134

Removing the Terminating Resistor

Remove the terminating resistor from the 6-socket connector labeled CAN 2 TERMINATOR of the data cable as shown.

Note: You no longer need the terminating resistor.

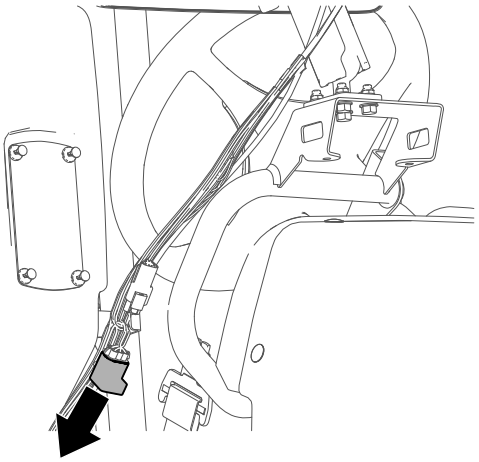

g422948

Figure 135

27

Assembling the Modem Data Harness to the Machine

Parts needed for this procedure:

1	Modem data harness—300 cm (118 inches)

Connecting the Modem Data Harness to the Display

Screw the modem harness connector into the display.

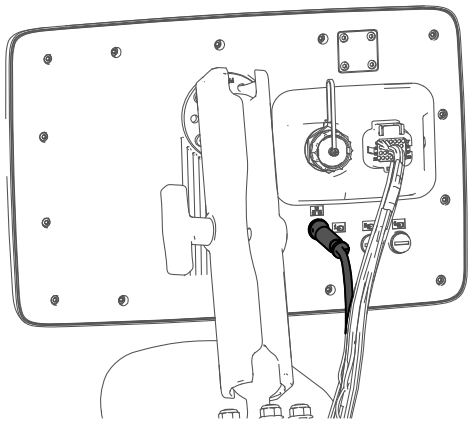

g420566

Figure 136

Routing the Modem Data Harness

1. Route the modem data harness along the data harness for the display.
2. Route the modem data harness under the shock-support tube of the machine
3. Route the modem data harness across the back if the relays and down.

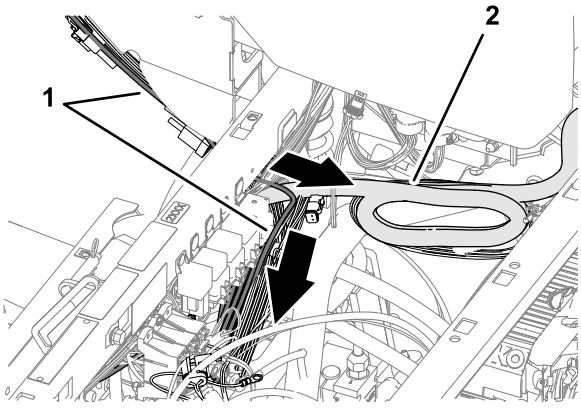

g315307

Figure 137

1. Data harness (control console)
2. Modem data harness

4. Align the 4-pin connector labeled ETHERNET CL-55 of the modem data harness near the 4 connectors for the modem-antenna harness as shown.

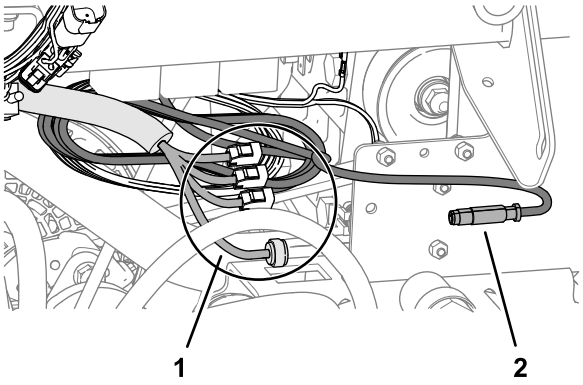

g315308

Figure 138

1. Connectors (modem-antenna harness)
2. 4-pin connector (labeled ETHERNET CL-55—modem data harness)

Securing the Navigation-Data and Electrical Harness, Modem-Antenna Harness, and Modem Data Harness

1. At the right, upper tube frame, bundle the navigation-data and electrical harness, and the CAN 2 ASC 10 BUS wire harness branch to the kit sprayer harness with 2 cable ties.
2. Bundle the modem-antenna harness and secure it to the kit sprayer harness bundle with 2 cable ties.

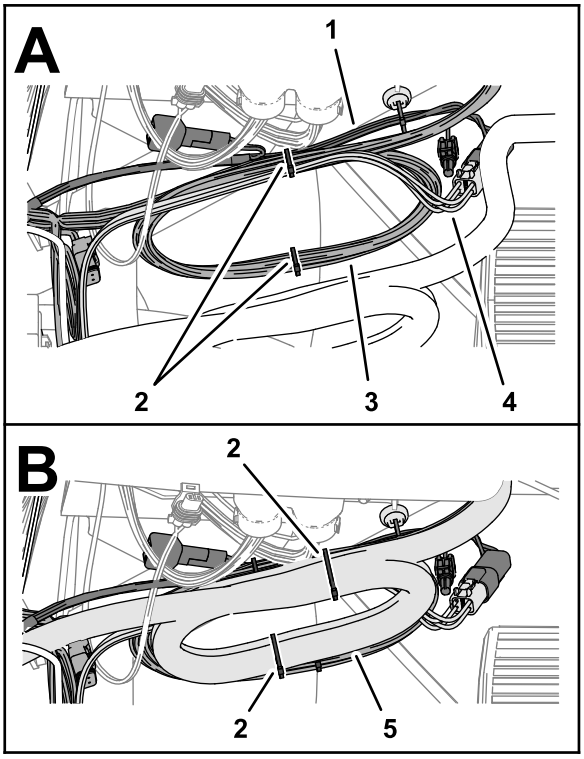

g315764

Figure 139

1. Kit sprayer harness
2. Cable ties
3. Navigation-data and electrical harness
4. CAN 2 ASC 10 BUS wire harness branch
5. Modem-antenna harness

3. Secure the modem-data harness and the navigation-data and electrical harness to the monitor tube with a cable tie.

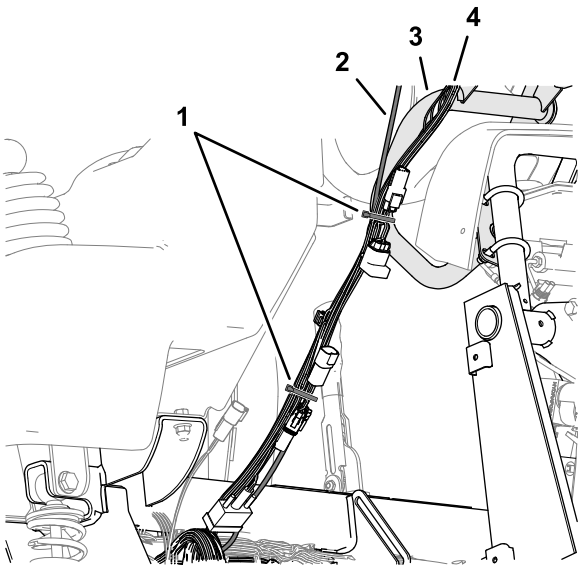

g315768

Figure 140

1. Cable tie
2. Modem-data harness
3. Monitor tube
4. Navigation-data and electrical harness

4. Secure the modem-data harness to the navigation-data and electrical harness with a cable tie.

28

Assembling the Modem Power Harness to the Machine

Parts needed for this procedure:

1	Modem power harness

Procedure

1. Align the modem power harness to the machine.

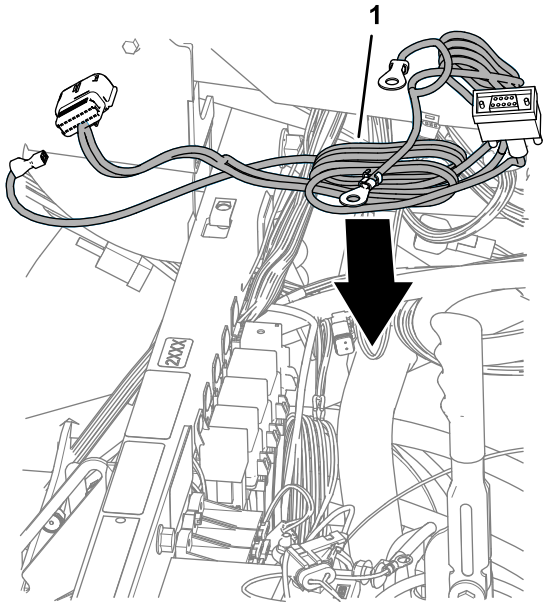

g315593

Figure 141

1. Modem power harness

2. Route the ring terminals of the modem power harness labeled BATTERY and GROUND toward the battery.

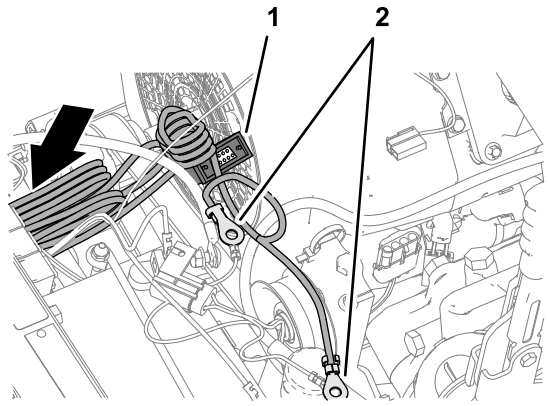

g315594

Figure 142

1. 9-pin connector (labeled RS232—modem power harness)
2. Ring terminals (labeled BATTERY and GROUND—modem power harness)

3. Route the 4-pin connector labeled ETHERNET CL-55 and the 18-socket connector labeled CL55 of the modem power harness under the fuse block of the machine.
4. At the front of the machine, route the 4-pin connector labeled ETHERNET CL-55 and the 18-socket connector labeled CL55 of the modem power harness to the machine as shown.

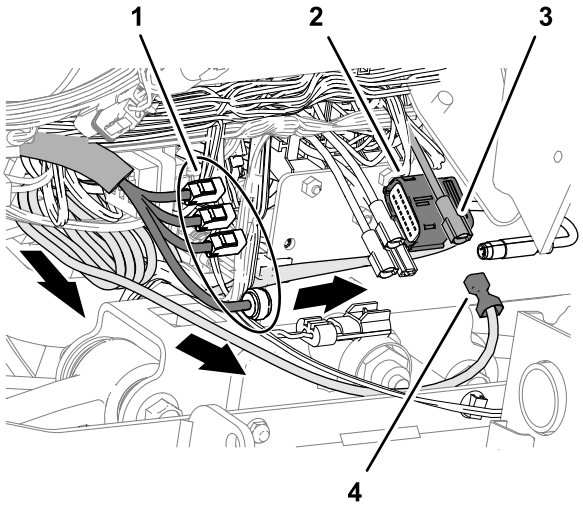

g315595

Figure 143

1. 4-pin connector (labeled ETHERNET CL-55—modem data harness)
2. 18-socket connector (labeled CL55—modem power harness)
3. Socket connector (options power—fuse block)
4. Terminal (labeled SWITCHED—modem power harness)

5. Plug the terminal of the modem power harness labeled SWITCHED into the socket connector for options power of the fuse block (.

   Note: If fuse block of your machine does not have an available options-power circuit, install an additional options-fuse block; refer to your authorized Toro distributor.
6. Near the fuse block bundle the modem power-harness at the 9-pin connector labeled RS232 and secure the harness with 2 cable ties as shown.

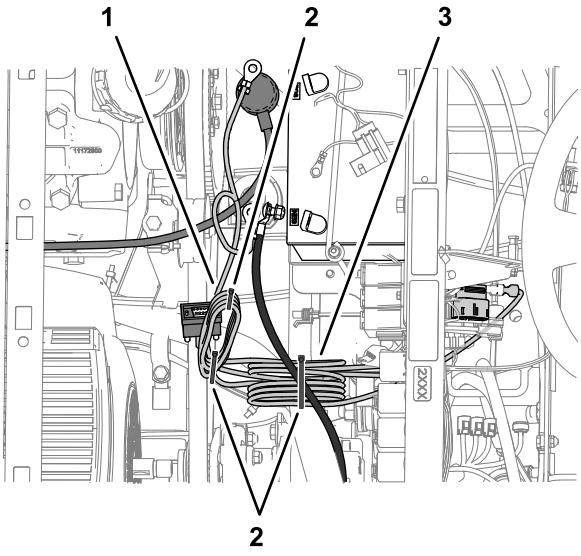

g315843

Figure 144

1. Modem power-harness bundle (at 9-pin connector labeled RS232—not used)
2. Cable ties
3. Modem power-harness bundle (at negative battery cable)

7. Bundle the modem power-harness at the negative battery cable, and secure the bundle to the battery cable with a cable tie.
8. Insert the fuse (10 A) into the fuse-block socket (Figure 145) for the options power circuit that you used in step 5.

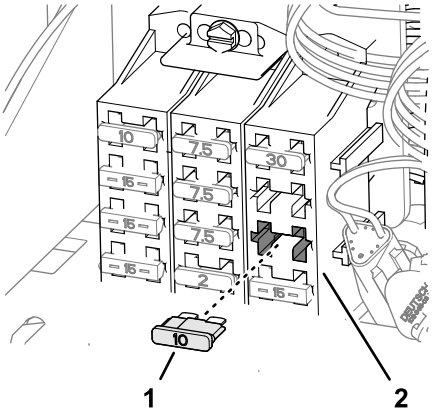

g323085

Figure 145

1. Fuse (10 A)
2. Fuse block

29

Installing the CL-55 Modem

Parts needed for this procedure:

1	CL-55 modem
1	Modem bracket
2	Bolt (#10-24 x 1-3/8 inches)
2	Locknut (#10-24 inch)
2	Magnet
2	Rivet

Installing the Modem to the Machine

1. Remove the push-in fastener that secures the wire harness of the machine to the prop-rod bracket.

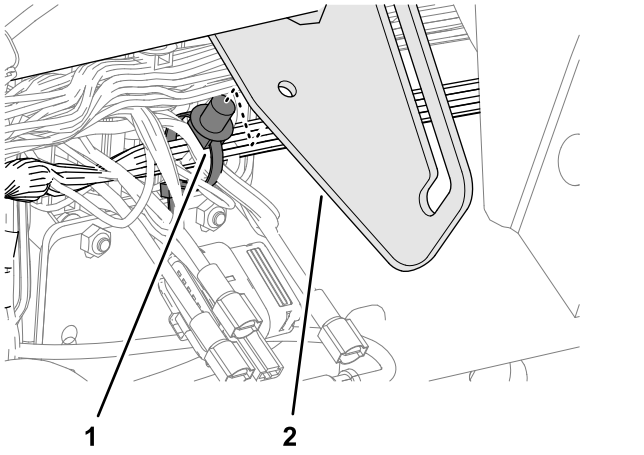

g315555

Figure 146

1. Push-in fastener (machine wire harness)
2. Prop-rod bracket

2. Secure the modem to the bracket using 2 bolts (#10-24 x 1-3/8 inches) and 2 nuts (#10-24).

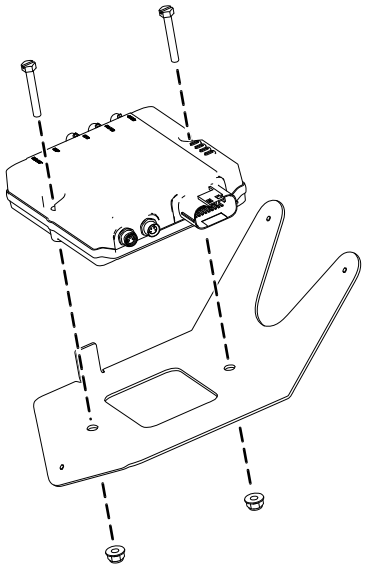

g422629

Figure 147

3. Secure the magnets to the modem bracket using the rivets.

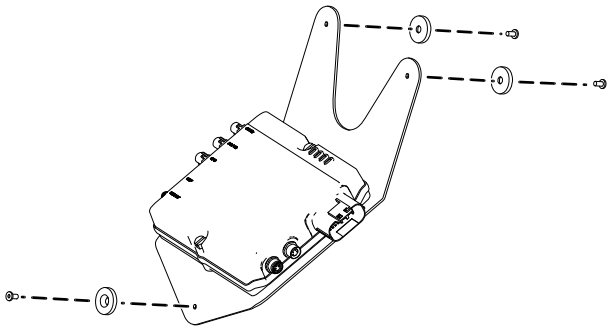

g422627

Figure 148

4. Place the modem bracket under the prop-rod bracket and behind the flange of the machine frame.

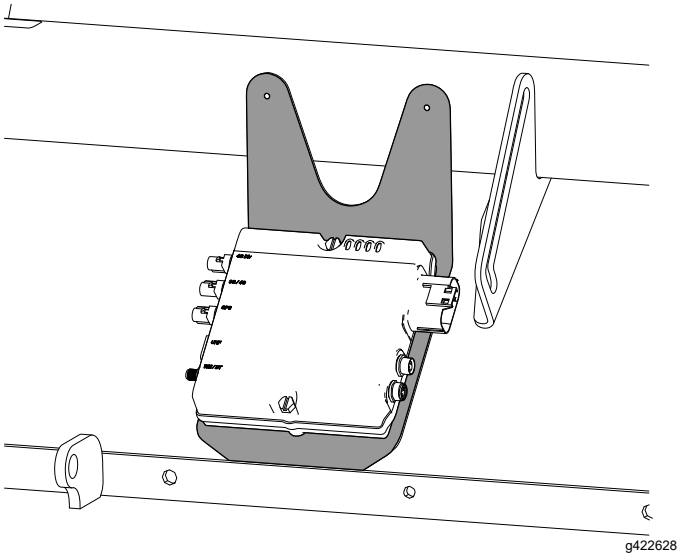

g422628

Figure 149

5. Insert the upper push-in fastener of the wire harness into the holes in the prop-rod bracket.

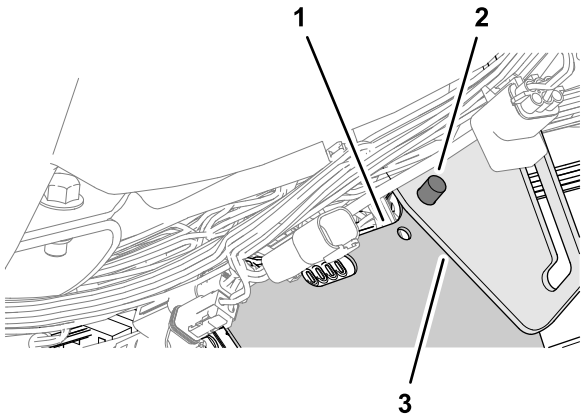

g315554

Figure 150

1. Modem bracket
2. Push-in fastener (machine wire harness)
3. Prop-rod bracket

Connecting the Antenna Harness to the Modem

1. Plug the coaxial connector of the modem-antenna harness labeled WIFI into the coaxial port of the CL-55 modem marked WIFI/BT, and tighten the coaxial connector.

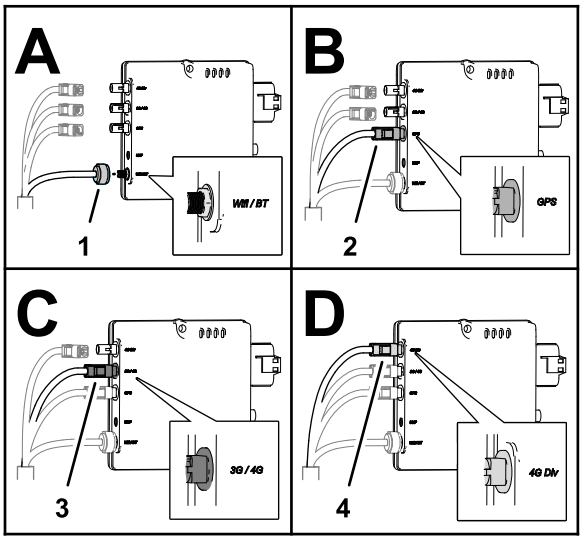

g310538

Figure 151

1. Coaxial connector (labeled WIFI—modem-antenna harness)
2. Blue coaxial push-in connector (labeled GNSS—modem-antenna harness)
3. Violet coaxial push-in connector (labeled LTE-1—modem-antenna harness)
4. Red coaxial push-in connector (labeled LTE-2—modem-antenna harness)

2. Plug the blue coaxial push-in connector of the modem-antenna harness labeled GNSS into the connector of the CL-55 modem marked GPS, until the connectors latch securely.
3. Plug the violet coaxial push-in connector of the modem-antenna harness labeled LTE-1 into the connector of the CL-55 modem marked 3G / 4G, until the connectors latch securely.
4. Plug the red coaxial push-in connector of the modem-antenna harness labeled LTE-2 into the connector of the CL-55 modem marked 4G DIV, until the connectors latch securely.

Connecting the Modem Data and Power Harnesses to the Modem

1. Plug the 4-pin connector of the modem data harness labeled ETHERNET CL55 into the 4-socket connector (unmarked) of the CL-55 modem, and tighten the knurled nut of the 4-pin connector.

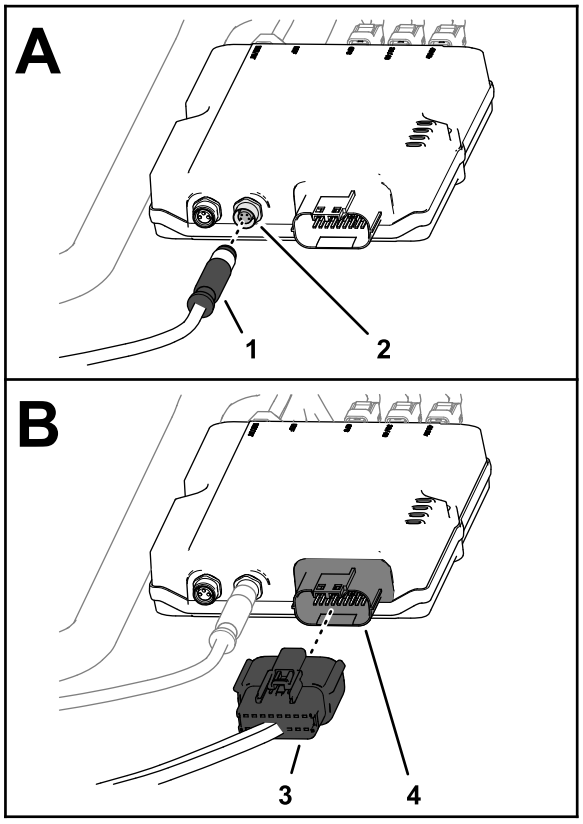

g310539

Figure 152

1. 4-pin connector (labeled ETHERNET CL55—modem data harness)
2. 4-socket connector (unmarked—CL-55 modem)
3. 18-socket connector (labeled CL55—modem power harness)
4. 18-pin connector (CL-55 modem)

2. Plug the 18-socket connector of the modem power harness labeled CL55 into the 18-pin connector of the CL-55 modem.

30

Removing the Passive Resistor from the Machine Wire Harness

No Parts Required

Procedure

At the inboard side of the control console of the machine, remove and retain the passive terminating resistor from the unlabeled 3-pin connector of the machine wire harness.

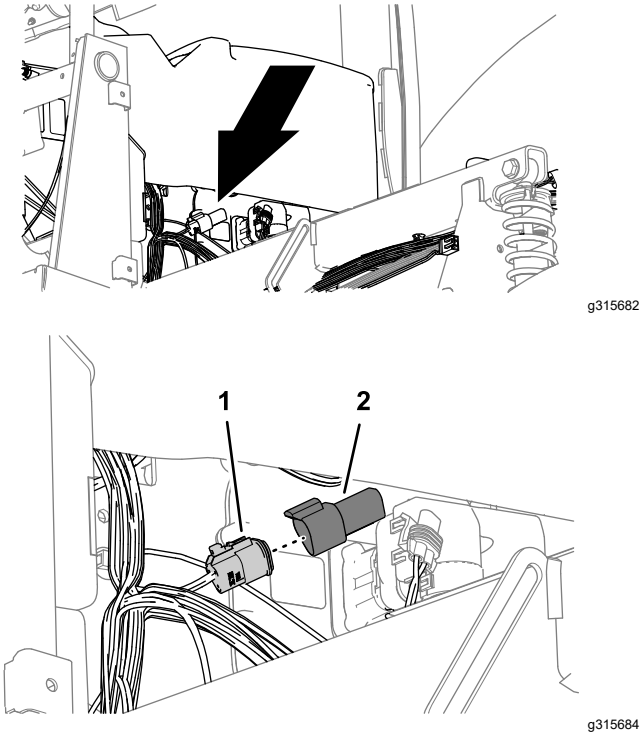

g315682

g315684

Figure 153

1. 3-pin connector (not labeled—machine wire harness)
2. Terminating resistor (passive)

31

Installing the ISO-CAN Bus Harness

Parts needed for this procedure:

1	ISO-CAN bus harness—302 cm (119 inches)

Connecting the ISO Bus Harness to the Navigation-Data and Electrical Harness

1. At the front of the control console of the machine, route the connector labeled TO ISOBUS of the ISO-CAN bus harness into the bottom of the display.

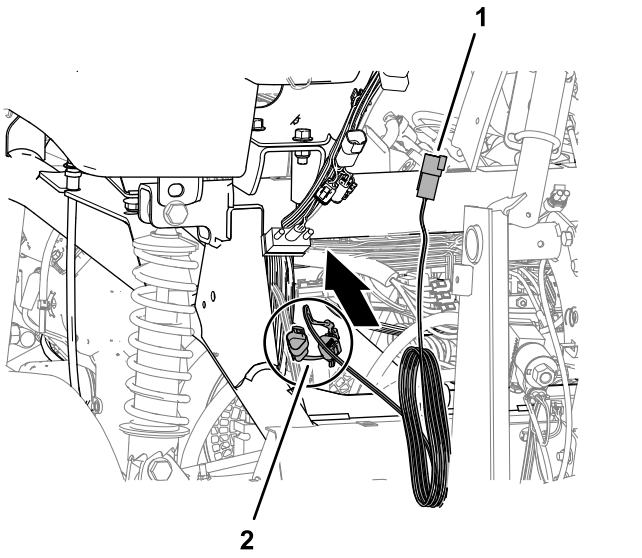

g315685

Figure 154

1. Connector (labeled TO ISOBUS—ISO-CAN bus harness)
2. Connectors (labeled CAN PORT A AND TO TORO CAN BUS—ISO-CAN BUS HARNESS)

2. Remove the cap from the 4-socket connector labeled CAN 1 ISOBUS of the navigation-data and electrical harness.

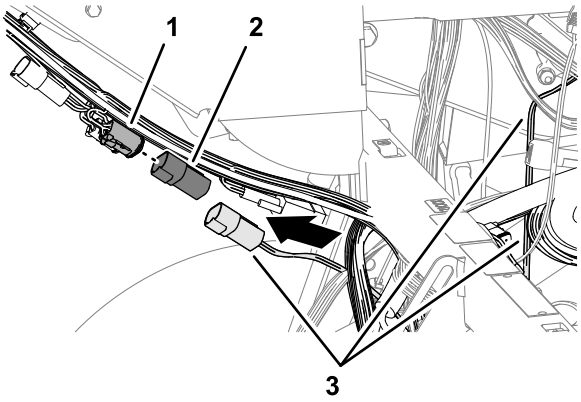

g315683

Figure 155

1. 4-socket connector (labeled CAN 1 ISOBUS—navigation-data and electrical harness)
2. Cap
3. ISO-CAN bus harness

3. Plug the 4-pin connector labeled TO ISOBUS of the ISO-CAN bus harness into the 4-socket connector labeled CAN 1 ISOBUS of the navigation-data and electrical harness.

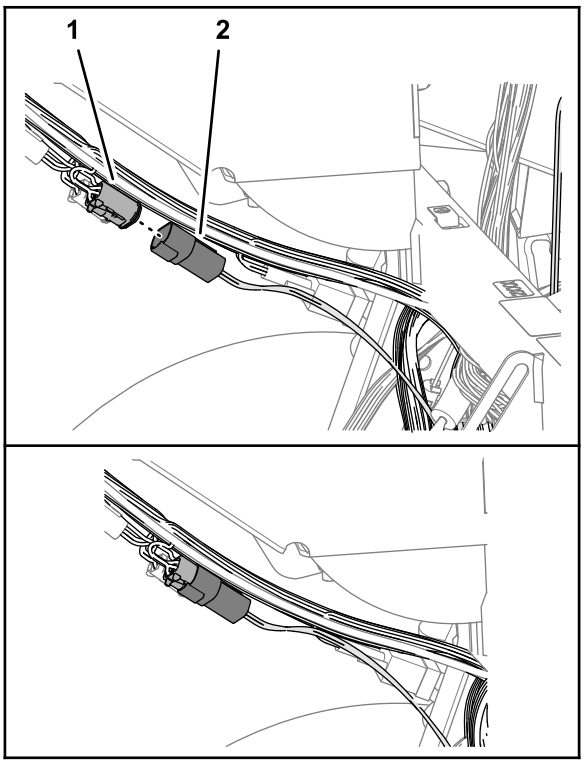

g315681

Figure 156

1. 4-socket connector (labeled CAN 1 ISOBUS—navigation-data and electrical harness)
2. 4-pin connector (labeled TO ISOBUS—ISO-CAN bus harness)

4. Route the connectors labeled TO TORO CANBUS and CAN PORT A of the ISO-CAN bus harness toward the fuse block.

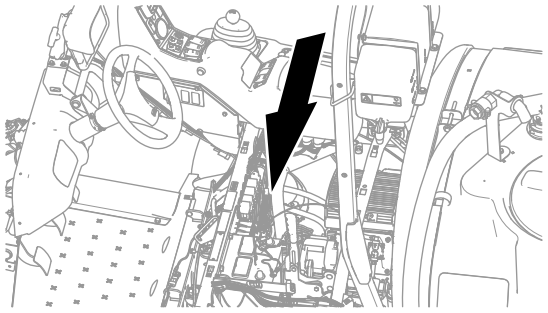

g324925

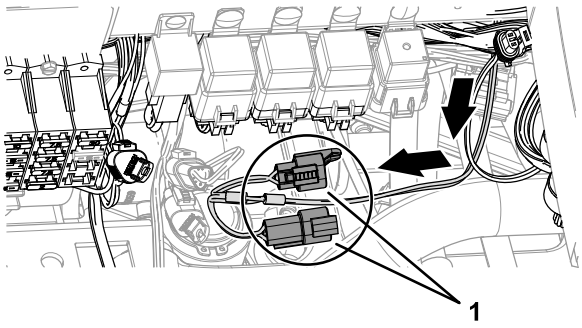

g324880

Figure 157

1. Connectors (labeled TO TORO CANBUS and CAN PORT A—ISO-CAN bus harness)

Connecting the ISO Bus Harness to the Machine Wire Harness

1. At the fuse block, remove the cap from the 3-socket connector labeled CAN BUS DIAGNOSTICS of the machine wire harness.

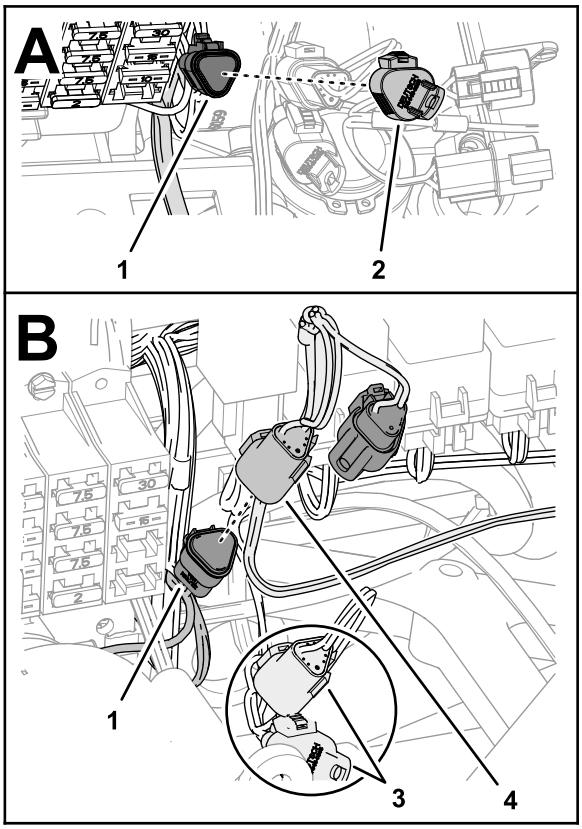

g324923

Figure 158

1. 3-socket connector (labeled CAN BUS DIAGNOSTICS—machine wire harness)
2. Cap
3. Connectors—kit sprayer harness (labeled DIAG. CONN. and CAN DIAGNOSTICS INTERCONNECT—do not connect)
4. 3-pin connector (labeled TO TORO CANBUS—ISO-CAN bus harness)

2. Plug the 3-pin connector labeled TO TORO CANBUS of the ISO-CAN bus harness into the 3-socket connector labeled CAN BUS DIAGNOSTICS of the machine wire harness.

   Important: **Do not connect the harness connectors labeled DIAG. CONN. and CAN DIAGNOSTICS INTERCONNECT of the rear harness.**

Securing the ISO Bus Harness

1. Bundle the ISO-CAN bus harness and secure it to the navigation-data and electrical harness with a cable tie.

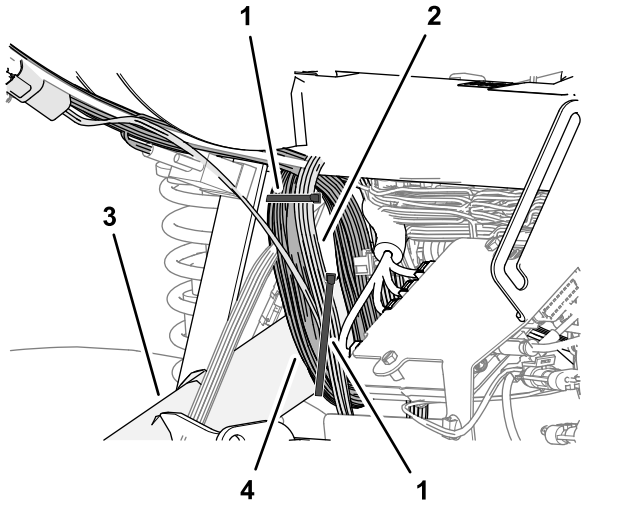

Figure 159

1. Cable tie
2. ISO-CAN bus harness
3. Right frame tube
4. Navigation-data and electrical harness

2. Secure the ISO-CAN bus harness and navigation-data and electrical harness to the right frame tube with a cable tie as shown.

32

Installing the Adapter Harness and Terminating Resistor

Parts needed for this procedure:

1	Adapter harness—13 cm (5 inches)

Procedure

1. At the satellite receiver, remove and discard the ISO bus terminator for the 6-socket connector of the GeoLink harness.

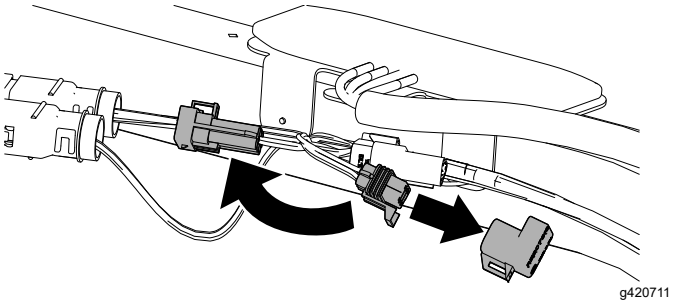

Figure 160

2. Plug the 6-pin connector of the adapter harness—13 cm (5 inches) into the 6-socket connector of the GeoLink harness.
3. Plug the resistor into the 3-socket connector of the adapter harness.
4. Secure the adapter harness to the GeoLink harness with a cable tie.

33

Wiring the Spray Pump Clutch

No Parts Required

Procedure

1. Disconnect the 2-socket connector of the machine wire harness labeled SPRAY PUMP COIL from the 2-pin connector of the pump clutch.

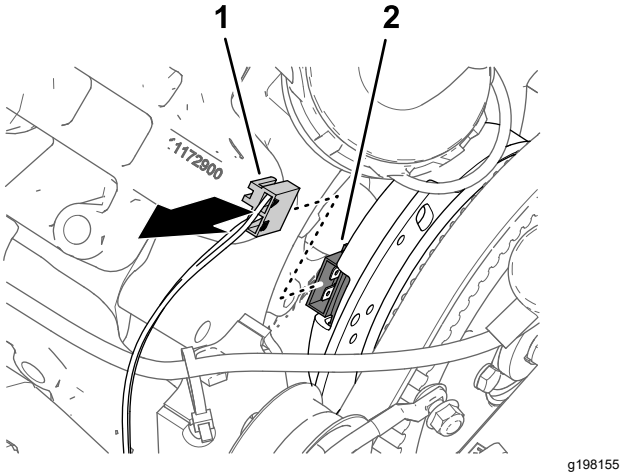

Figure 161

1. 2-socket connector—machine wire-harness (SPRAY PUMP COIL)
2. 2-pin connector (pump clutch)

2. Connect the 2-pin connector of the kit sprayer harness branch—84 cm (33 inches) into the 2-socket connector of the machine wire-harness labeled SPRAY PUMP COIL.

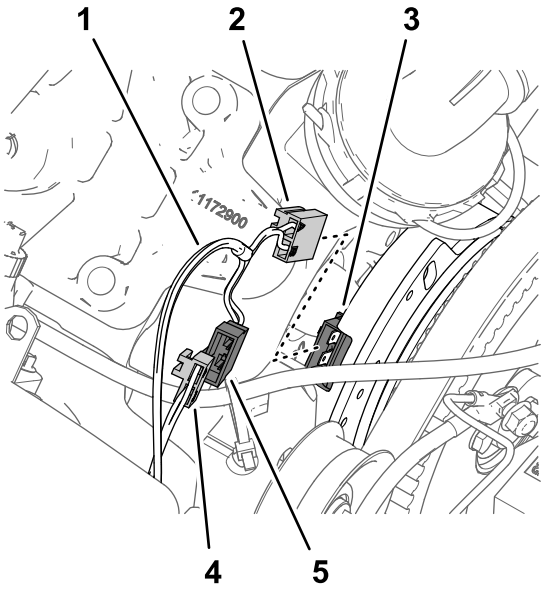

g198144

Figure 162

1. Kit sprayer harness branch—84 cm (33 inches)
2. 2-socket connector (not labeled—kit sprayer harness)
3. 2-pin connector (pump clutch)
4. 2-socket connector—machine wire-harness (SPRAY PUMP COIL)
5. 2-pin connector (not labeled—kit sprayer harness)

3. Connect the 2-socket connector of the kit sprayer harness into the 2-pin connector of the pump clutch.
4. Route the wire-harness branch—84 cm (33 inches) against the engine and spray pump so that the harness clears the alternator belt.

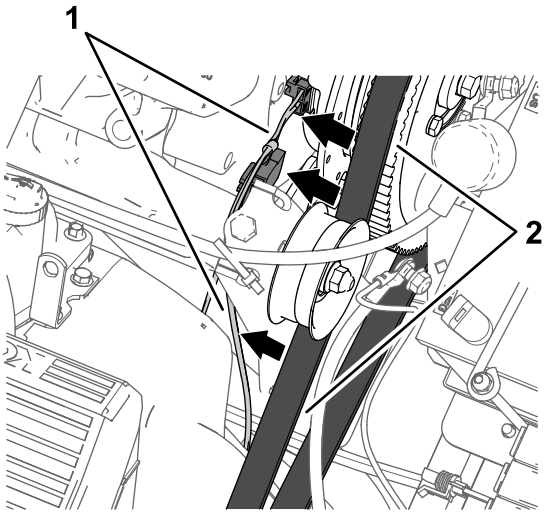

g198156

Figure 163

1. Kit sprayer harness branch—84 cm (33 inches)
2. Alternator belt

34

Installing Components for the Electrical System

Parts needed for this procedure:

1	Battery bracket
1	Bumper
2	Flange-locknut (1/4 inch)
1	Strap
1	Battery (650 A)
1	Alternator bracket
1	Drive pulley 279 mm (11 inch)
4	Bolt (1/4 x 2-1/4 inches)
1	Alternator (60 A)
1	Flange-head bolt (8 x 25 mm)
1	Flange-head bolt (3/8 x 1-1/2 inches)
1	V-belt

Removing the Battery (300 A) and Battery Bracket

1. Remove the 2 flange locknuts and hold-down rod from the 2 J-bolts that secure the battery to the battery bracket of the machine.

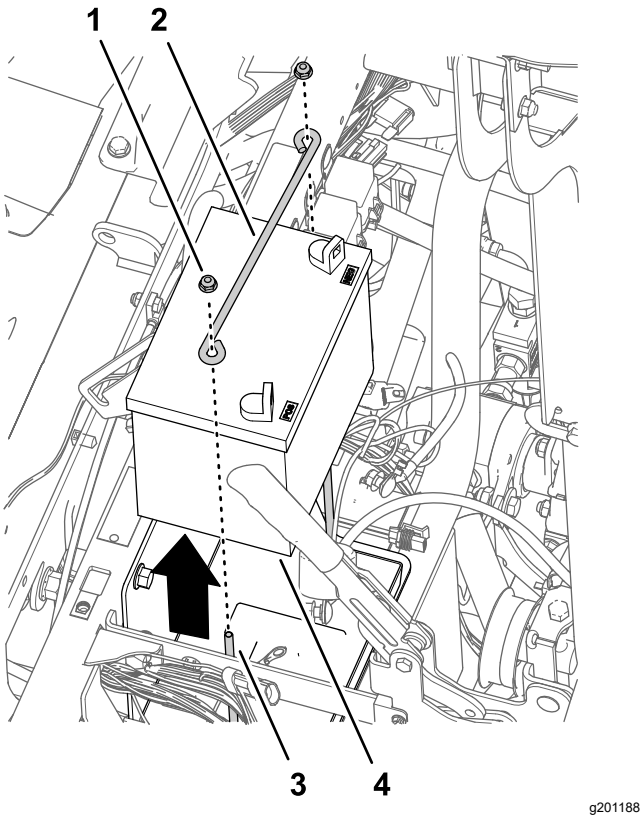

Figure 164

1. Flange locknut (1/4 inch)
2. Hold-down rod
3. J-bolt
4. Battery (300 A)

2. Remove and discard the 2 J-bolts and battery tray from the battery bracket.

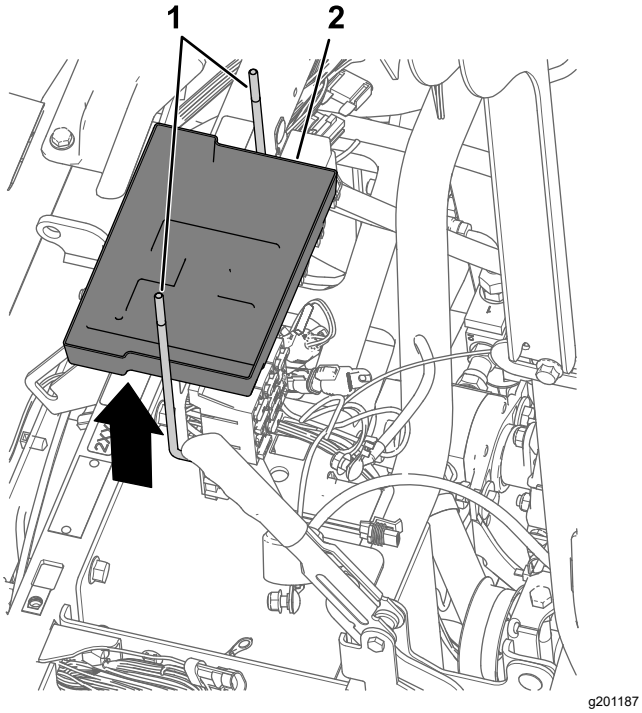

Figure 165

1. J-bolt
2. Battery tray

3. Remove the battery from the machine.

   Note: You no longer need the flange nuts, hold-down rod, and battery (300 A).

4. Remove and retain the 3 bolts (10-24 x 3/4 inch) and 3 nuts (10-24) that secure the fuse blocks to the battery bracket.

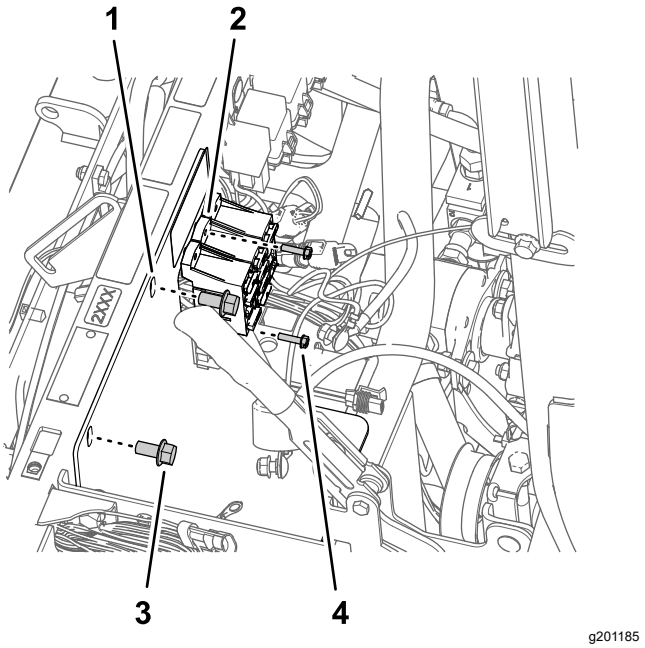

Figure 166

1. Bold-down rod
2. Fuse block
3. Flange-head bolt (3/8 x 3/4 inch)
4. Bolt (10-24 x 3/4 inch)

5. Remove and retain the 2 flange-head bolts (3/8 x 3/4 inch) that secure battery bracket to the shock-support tube of the machine.
6. Remove and retain the 2 bolts (10-24 x 3/4 inch), 2 locknuts (10-24), and wire-support clip that secure the ground block and wire to the battery bracket.

   Note: Discard the wire support clip.

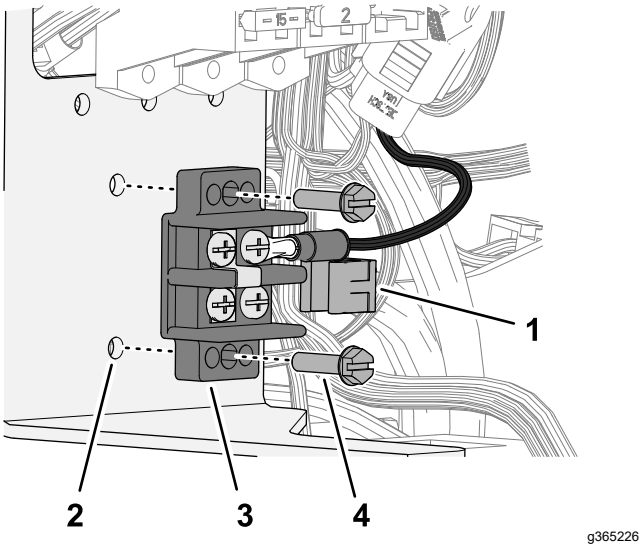

g365226

Figure 167

1. Wire-support clip
2. Battery bracket
3. Ground block
4. Bolt (10-24 x 3/4 inch)

7. Remove and discard the battery bracket from the machine.

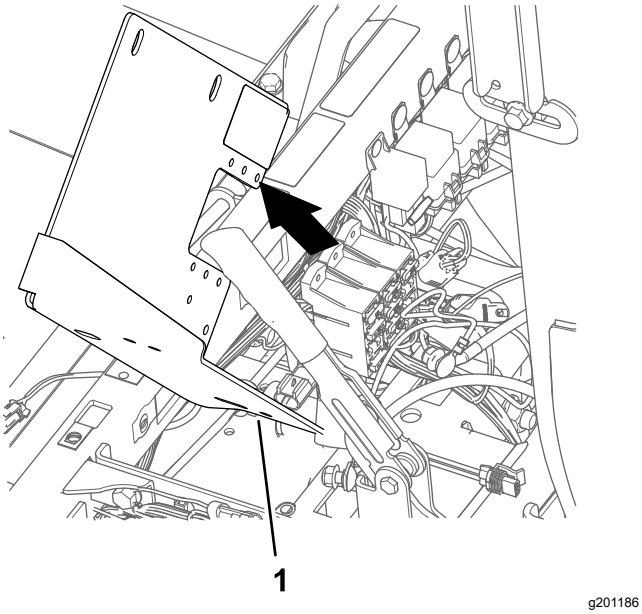

g201186

Figure 168

1. Battery bracket

Assembling the Battery Bracket

1. Assemble the 2 bumpers to the battery bracket with 2 flange locknuts (1/4 inch).

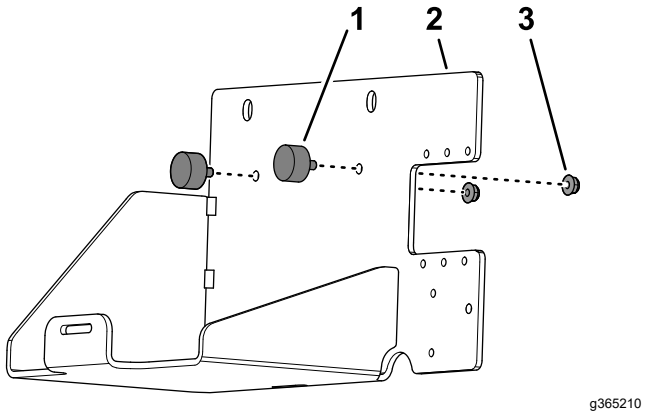

g365210

Figure 169

1. Bumper
2. Battery bracket
3. Flange locknut (1/4 inch)

2. Assemble the strap through the 2 slots in the battery bracket.

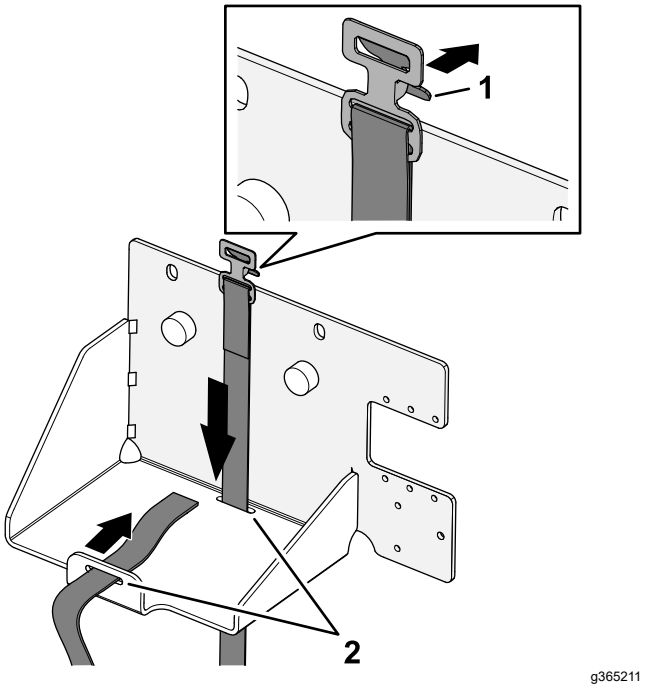

g365211

Figure 170

1. Latch (strap buckle)
2. Slot (battery bracket)

Installing the Battery Bracket and Battery (650 A)

1. Align the new battery bracket to the shock-support tube of the machine and the fuse blocks.

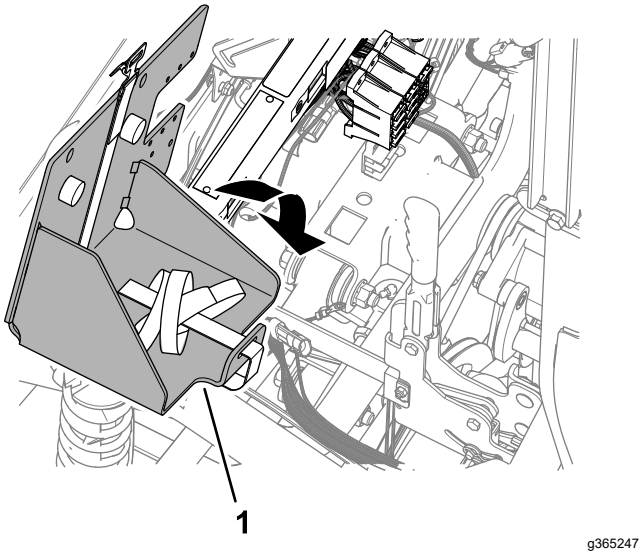

g365247

Figure 171

1. Battery bracket

2. Assemble the battery bracket to the shock-support tube with the previously removed 2 flange-head bolt (3/8 x 3/4 inch).

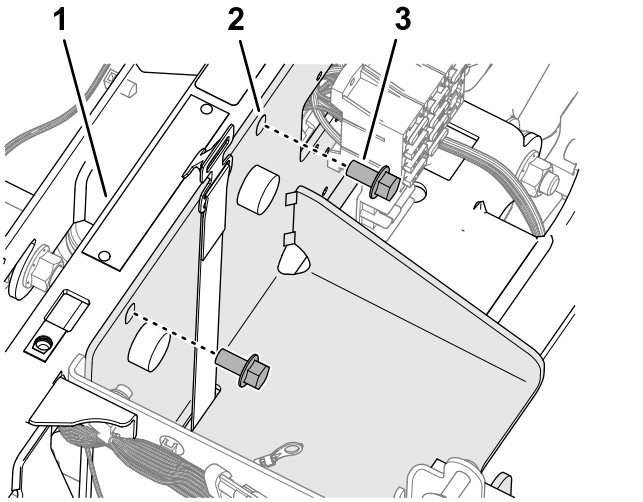

g365259

Figure 172

1. Shock-support tube
2. Battery bracket
3. Flange-head bolt (3/8 x 3/4 inch)

3. Torque the flange head bolts to 37 to 45 N·m (27 to 33 ft-lb).
4. Secure the ground block and to the battery bracket with the previously removed 2 bolts (10-24 x 3/4 inch), 2 locknuts (10-24) and secure the wire-support clip to the edge of the bracket.

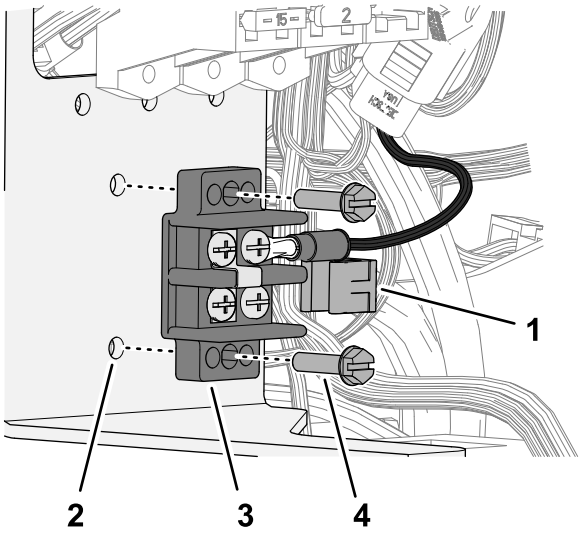

g365226

Figure 173

1. Wire-support clip
2. Battery bracket
3. Ground block
4. Bolt (10-24 x 3/4 inch)

5. Secure the fuse blocks to the battery bracket with the 3 previously removed bolts (10–24 x 3/4 inch) and 3 nuts (10-24).

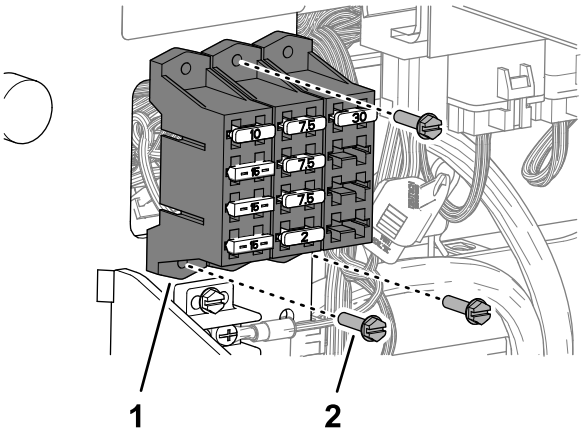

g365260

Figure 174

1. Fuse block
2. Bolt (10–24 x 3/4 inch)

6. Assemble the battery (650 A) into the battery bracket.

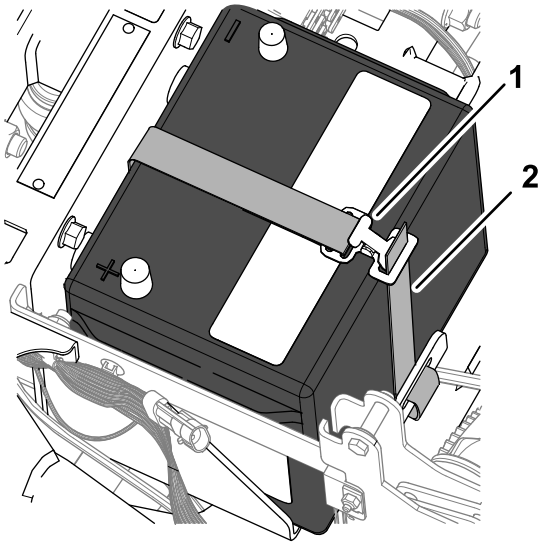

g365262

Figure 175

1. Battery-strap buckle
2. Webbing (battery strap)

7. Feed the webbing of the battery strap through the buckle, and tighten the strap until the battery is secure.

Installing the Alternator Bracket

1. At the pump head, loosen the 2 bolts to provide a 7 to 10 mm (1/4 to 3/8 inch) gap between the head of the bolts and the pump.

   Note: You do not need to remove the bolts from the spray pump.

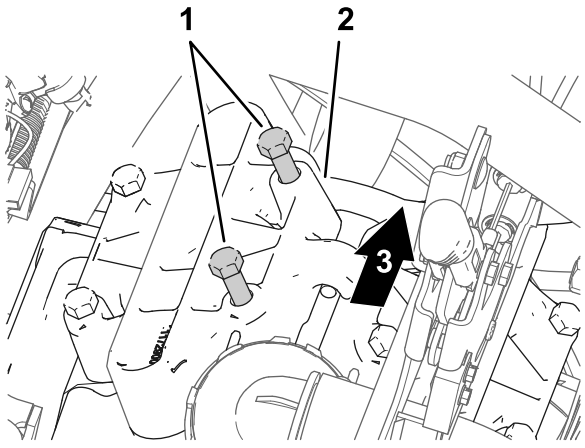

g201308

Figure 176

1. Bolts (pump head)
2. Pump head (11 o'clock position)
3. Back of the machine

2. Align the alternator bracket between the bolts and the pump head.

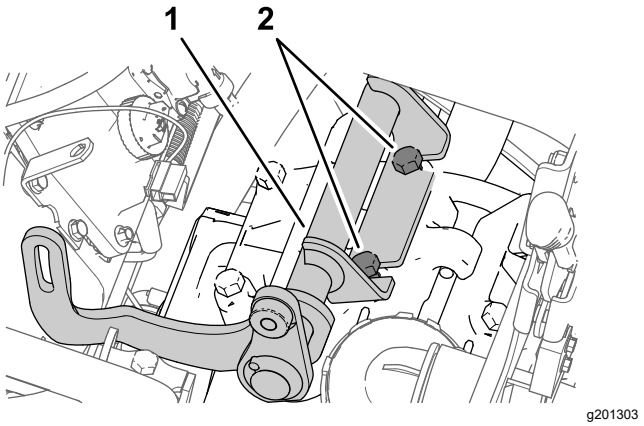

g201303

Figure 177

1. Alternator bracket
2. Bolts (pump head)

3. Torque the bolts to 61 to 75 N (45 to 55 ft-lb).

Installing the Drive Pulley

1. Loosen the nut for the idler-pulley shaft.

   Note: Ensure that there is no belt tension.

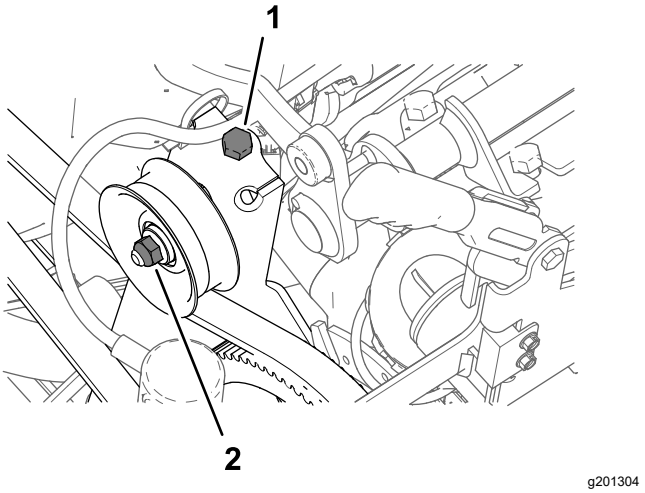

g201304

Figure 178

1. Belt-tension bolt (machine)
2. Nut (idler-pulley shaft)

2. Rotate the belt-tension bolt to remove all tension from the sprayer-pump belt.
3. Remove the 4 bolts (1/4 x 1 inch) and 4 lock washers (1/4 inch) that secure the pulley to the sprayer pump.

   Important: **Do not remove the pulley.**

   Note: Retain the lock washer; you no longer need the bolts.

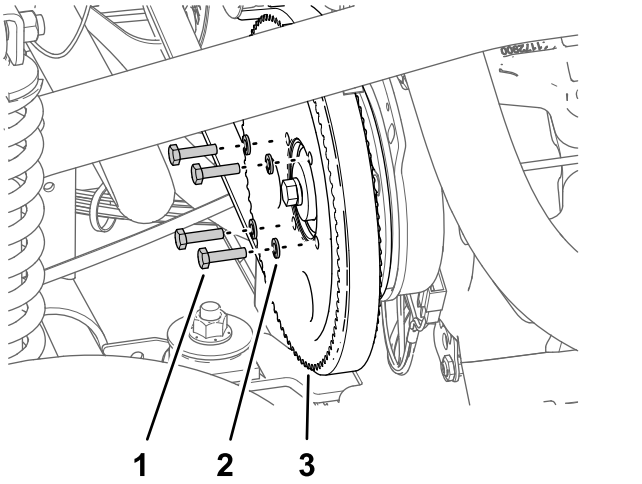

g201306

Figure 179

1. Bolt (1/4 x 1 inch)
2. Lock washer (1/4 inch)
3. Pulley (sprayer pump)

4. Align the holes in the pulley for the alternator (kit) with the holes in the pulley for the sprayer pump.

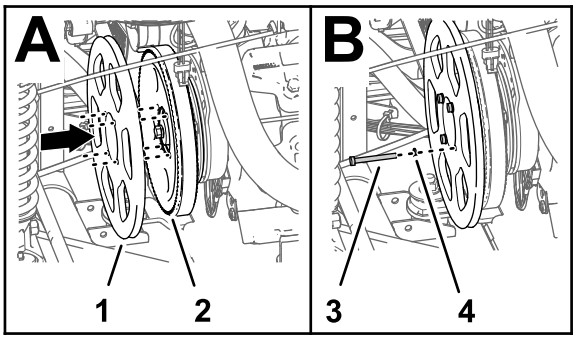

g201305

Figure 180

1. Drive pulley 279 mm (11 inch)
2. Pulley (sprayer pump)
3. Bolt (1/4 x 2-1/4 inches)
4. Lock washer (1/4 inch)

5. Assemble the alternator pulley to the sprayer-pump pulley and sprayer pump with the 4 bolt (1/4 x 2-1/4 inches) and 4 lock washers (1/4 inch).
6. Torque the bolts to 1017 to 1243 N·m (90 to 110 in-lb).
7. Rotate the belt-tension bolt to increase the tension of the belt until you measure belt 9.5 mm (3/8 inch) of belt deflection when you apply 4.5 kg (10 lb) halfway between the engine and spray pump sprockets.

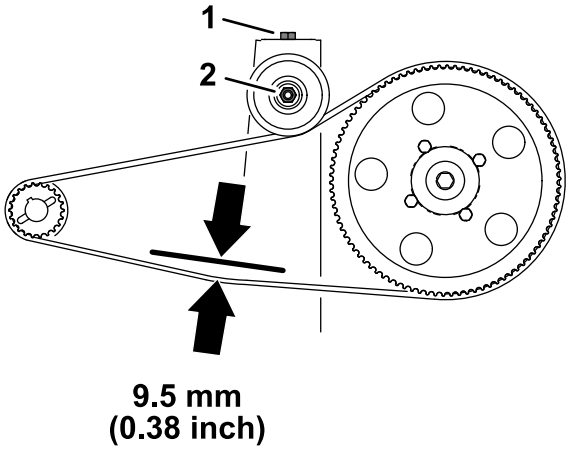

g201360

Figure 181

1. Belt-tension bolt (machine)
2. Nut (idler-pulley shaft)

8. Tighten the nut for the idler-pulley shaft to 37 to 44 N·m (27 to 33 ft-lb).

Installing the Alternator

1. Assemble the alternator (60 A) to the threaded boss of the alternator-bracket ith the flange-head bolt (3/8 x 1-1/2 inches).

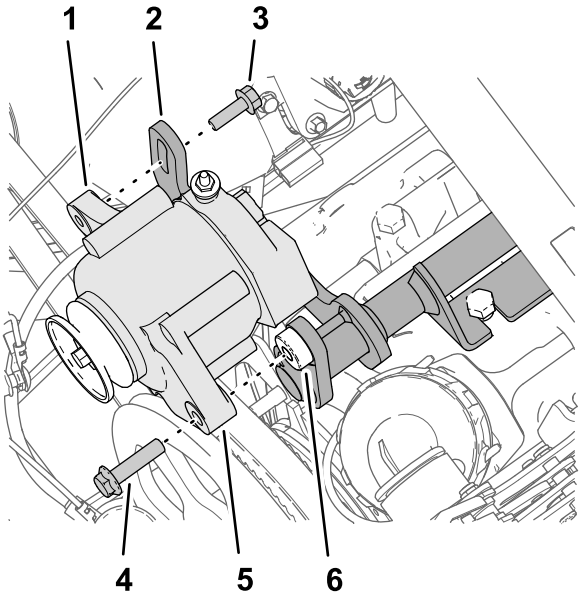

g201413

Figure 182

1. Threaded flange (8 mm)—alternator (60 A)
2. Slotted flange (alternator bracket)
3. Flange-head bolt (8 x 25 mm)
4. Flange-head bolt (3/8 x 1-1/2 inches)
5. Flange (10 mm (3/8 inch) hole)—alternator (60 A)
6. Threaded boss (3/8-16)—alternator-bracket

2. Assemble the threaded flange of the alternator to the slotted flange of the alternator bracket with the flange-head bolt (8 x 25 mm).

3. Assemble the V-belt over the drive pulley 279 mm (11 inch) and the pulley of the alternator.

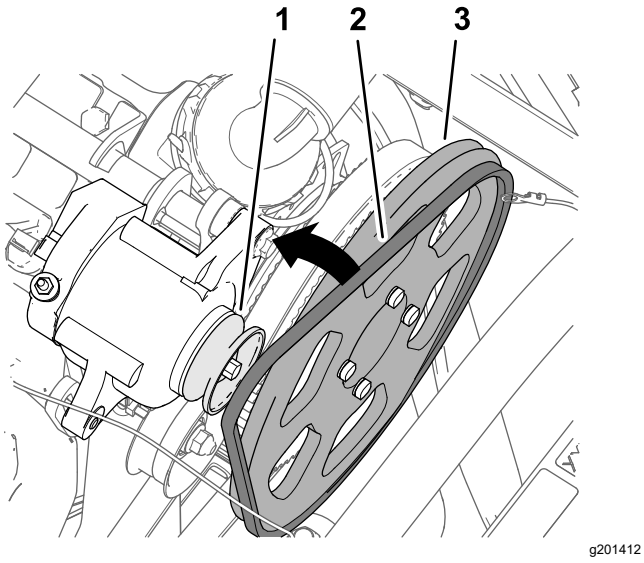

Figure 183

1. Pulley (Alternator—60 A)
2. V-belt
3. Drive pulley 279 mm (11 inch)

4. Rotate the alternator up to increase tension on the belt until you measure belt 9.5 mm (3/8 inch) of belt deflection when you apply 4.5 kg (10 lb) halfway between the alternator pulley and drive pulley 279 mm (11 inch).

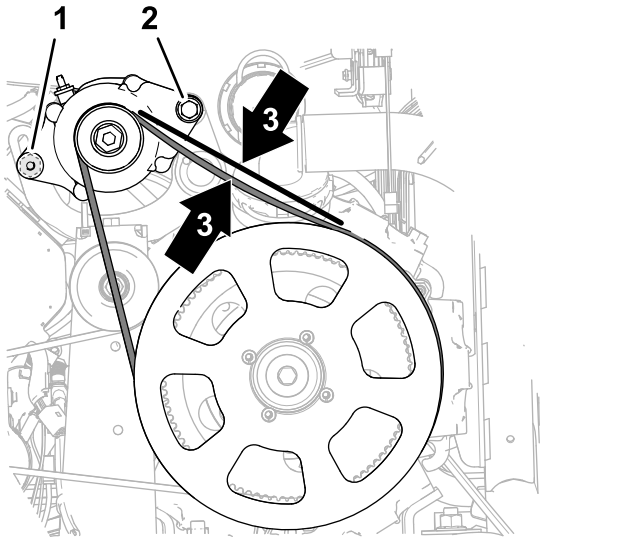

Figure 184

1. Flange-head bolt (8 x 25 mm)
2. Flange-head bolt (3/8 x 1-1/2 inches)
3. Belt deflection 9.5 mm (3/8 inch)

5. Torque the flange-head bolt (8 x 25 mm) to 23 to 29 N·m (17 to 21 ft-lb).
6. Torque the flange-head bolt (3/8 x 1-1/2 inches) to 37 to 45 N·m (27 to 33 ft-lb).

35

Connecting the Harness at the Seat Base

Parts needed for this procedure:

1	Alternator cable (red—6 gauge)
1	Relay
1	Push-in fastener
1	Fuse (15 A)

Connecting the Alternator (50 A)

1. Connect the 2-socket at the end of the pink wire 57 cm (23-1/2 inches) of the harness onto the 2-pin connector of the alternator (50 A).

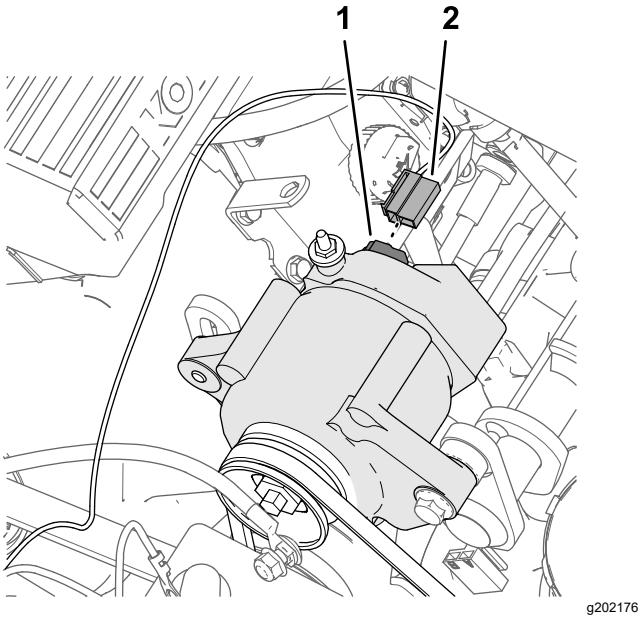

Figure 185

1. 2-pin connector—alternator (50 A)
2. 2-socket connector—sense wire, pink 57 cm (23-1/2 inches)

2. Route the pink sense wire away from the alternator belts and secure the wire with a cable tie.
3. Remove the nut from the terminal post of the alternator (50 A).

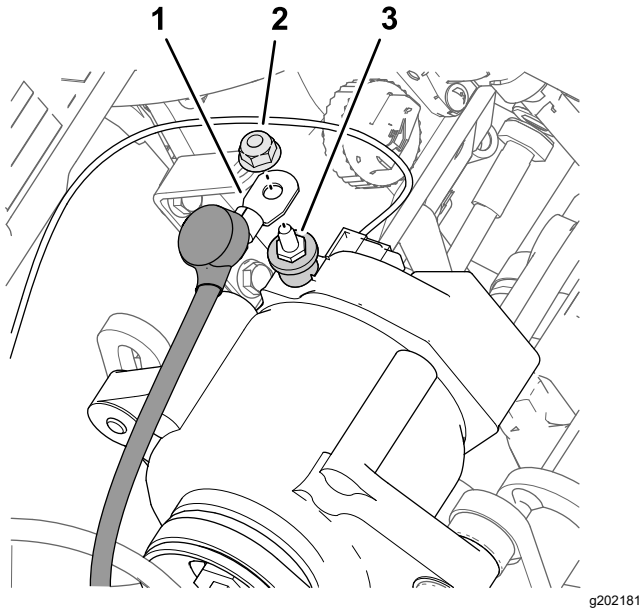

Figure 186

1. Alternator cable (red—6 gauge)
2. Nut
3. Terminal post—alternator (50 A)

4. Assemble the end of the red, 6 gauge alternator cable with the insulator cover onto the terminal post of the alternator (50 A) with the nut.
5. Route the other end of the alternator cable toward the battery posts, away from the pulley and alternator belt.
6. Torque the nut to 47 to 57 N·m (34 to 42 ft-lb).
7. Slip the insulator cover over the terminal post of the alternator.

Connecting the ASC 10 Enable Relay

1. Connect the 5-pin connector of the relay into the 5-socket connector of the harness labeled ASC 10 ENABLE RELAY.

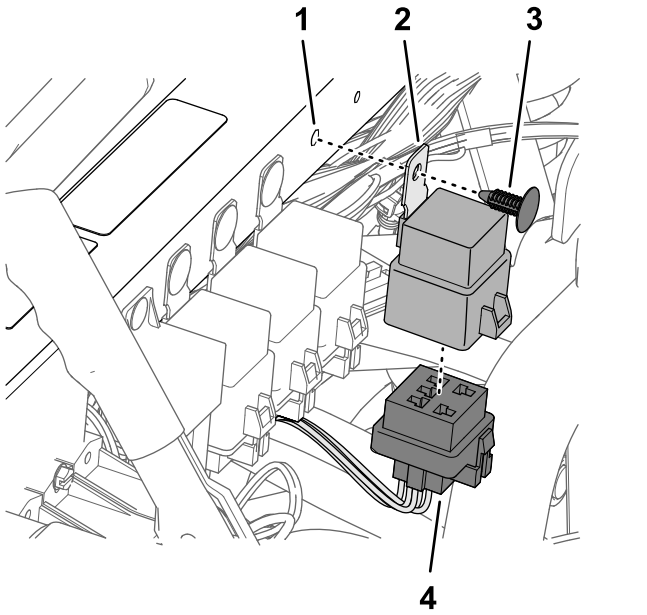

Figure 187

1. Hole (shock-support tube)
2. Relay
3. Push-in fastener
4. 5-socket connector (ASC 10 ENABLE RELAY)

2. Align the hole in the mounting tab of the relay with the hole in the shock-support tube, and secure the relay to the tube with a push-in fastener.

Connecting the Fuse Blocks

1. Prepare a multi-meter for preforming a continuity test.
2. At fuse block 3 of the machine, insert the multi-meter probe into contact 4 (the right column) of fuse-socket 2.

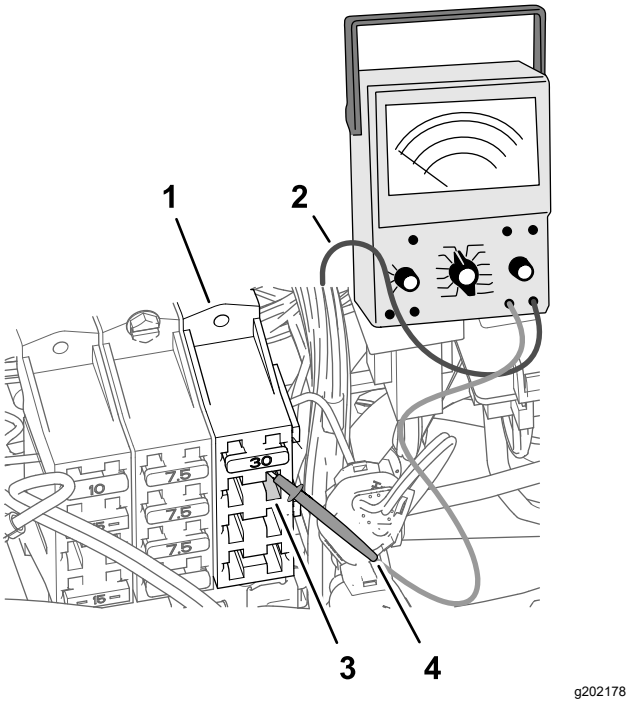

g202178

Figure 188

1. Fuse block 3 (machine)
2. Multi-meter lead
3. Fuse-socket 2—contact 4 (right column)
4. Multi-meter probe

3. At the front side of the fuse blocks, use the other multi-meter probe to identify the blade connector at the end of the red 10-gauge wire that connects to fuse-socket 2—contact 4.

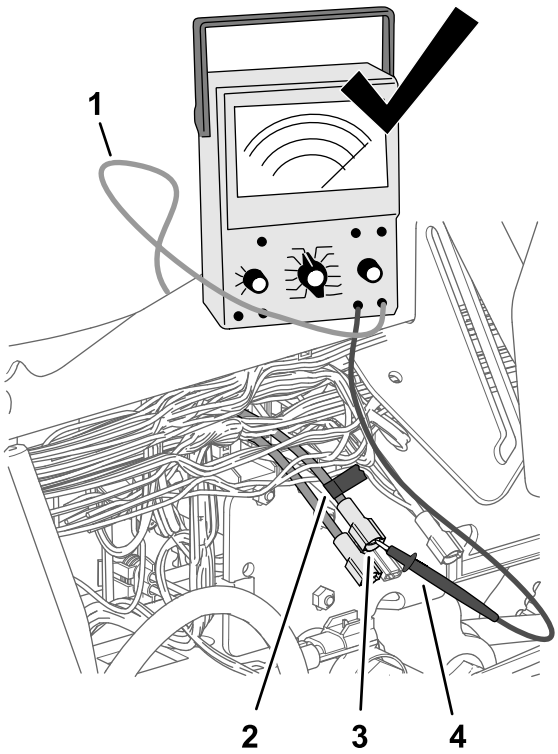

g202179

Figure 189

1. Multi-meter lead
2. Tape
3. Blade connector (red 10-gauge wire)
4. Multi-meter probe

4. Use a piece of tape to mark the connector and wire that you identified in the previous step.
5. Connect the blade connector that you marked in the previous step into the socket connector at the end of the pink wire 51 mm (2 inches) of the harness.

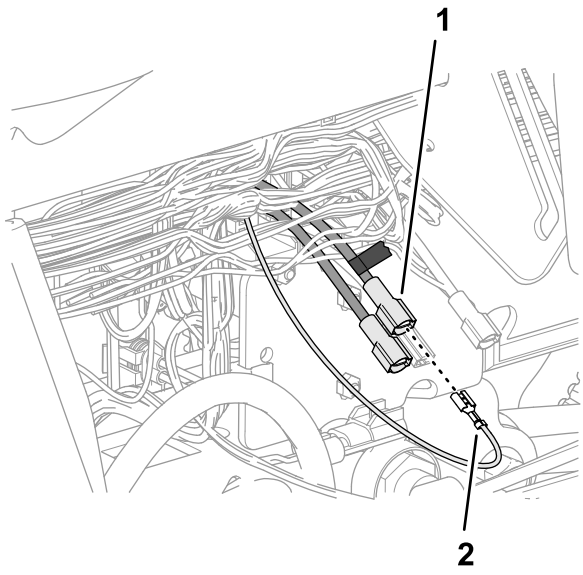

g202177

Figure 190

1. Marked blade connector (red 10-gauge wire)
2. Socket connector—pink wire 51 mm (2 inches)

6. Insert the fuse (15 A) into fuse-socket 2 of fuse block 3 until the fuse is fully seated.

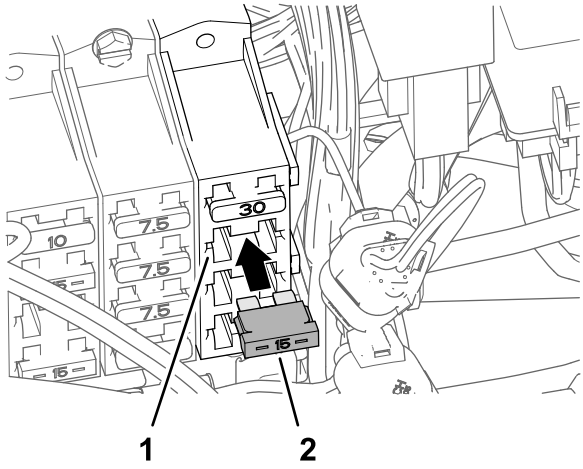

g202180

Figure 191

1. Fuse-socket 2 (fuse block 3)
2. Fuse (15 A)

36

Installing the Navigation-Data and Electrical Harness

Parts needed for this procedure:

1	Quick-connect clamp (red handle)
1	Quick-connect clamp (black handle)

Assembling the Quick-Disconnect Clamps to the Battery

1. Remove the hex nuts and washers from the handle quick-connect clamps.
2. Open the latch handle of the quick-connect clamp with the black handle.

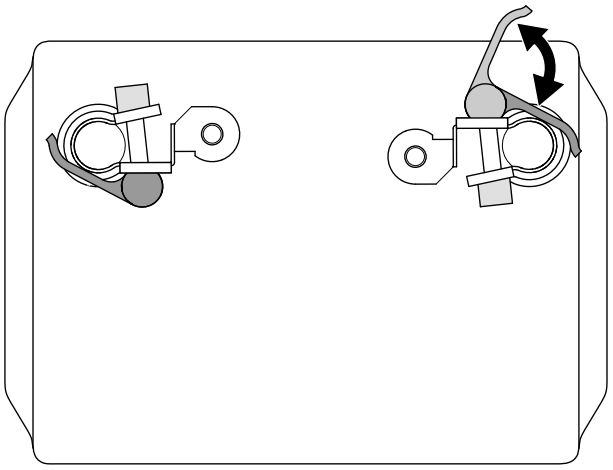

g424702

Figure 192

3. Assemble the quick-connect clamp onto the negative battery post, with the threaded post of the clamp aligned toward the center of the battery.
4. Close the latch handle of the quick-connect clamp.

   Note: If you need to adjust the clamping force of the quick-connect clamp, open the handle, rotate the knurled nut to increase or decrease the clamping force, and close the handle for the clamp.
5. Repeat the steps for the red handle clamp on the positive battery post.

Connecting the Battery

⚠ WARNING

Incorrect battery cable routing could damage the machine and cables causing sparks. Sparks can cause the battery gasses to explode, resulting in personal injury.

- **Always *disconnect* the negative (black) battery cable before disconnecting the positive (red) cable.**
- **Always *connect* the positive (red) battery cable before connecting the negative (black) cable.**

⚠ WARNING

Battery terminals or metal tools could short against metal components causing sparks. Sparks can cause the battery gasses to explode, resulting in personal injury.

- **When removing or installing the battery, do not allow the battery terminals to touch any metal parts of the machine.**
- **Do not allow metal tools to short between the battery terminals and metal parts of the machine.**

1. Slit the insulator cover of the positive battery cable to the starter.

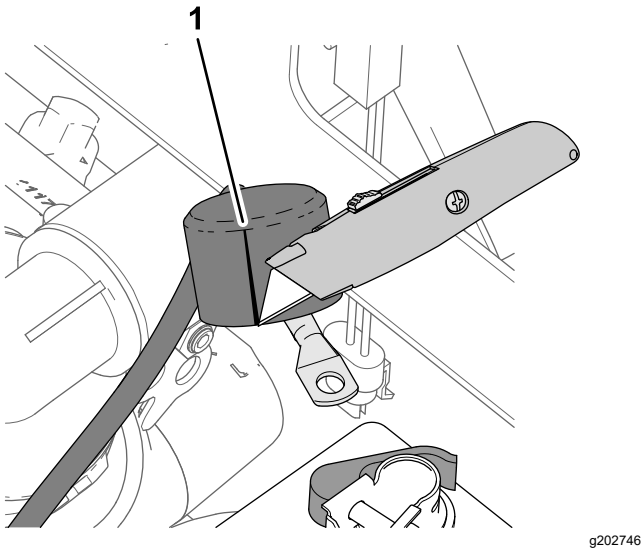

g202746

Figure 193

1. Slit (insulator cover—positive battery cable to the starter)

2. Assemble the following wire and cable terminals onto the threaded post of the positive battery terminal in the following order:

Important: **Ensure that the battery-cable terminal (positive) to the engine starter is positioned at the top of the stack of terminals on the threaded post.**

A. Ring terminal—165 cm (65 inch) modem power harness branch (labeled BATTERY
B. Battery-cable terminal (positive)—to the alternator (50 A)
C. Ring terminal—258 cm (101-1/2 inch) navigation-data and electrical harness branch (labeled BATTERY (+))
D. Ring terminal—21.6 cm (8-1/2 inch) machine harness branch (labeled TO BATTERY POSITIVE)
E. Ring terminal—24 cm (9-1/2 inch) kit sprayer-harness branch (unlabeled)
F. Battery-cable terminal (positive)—to the engine starter

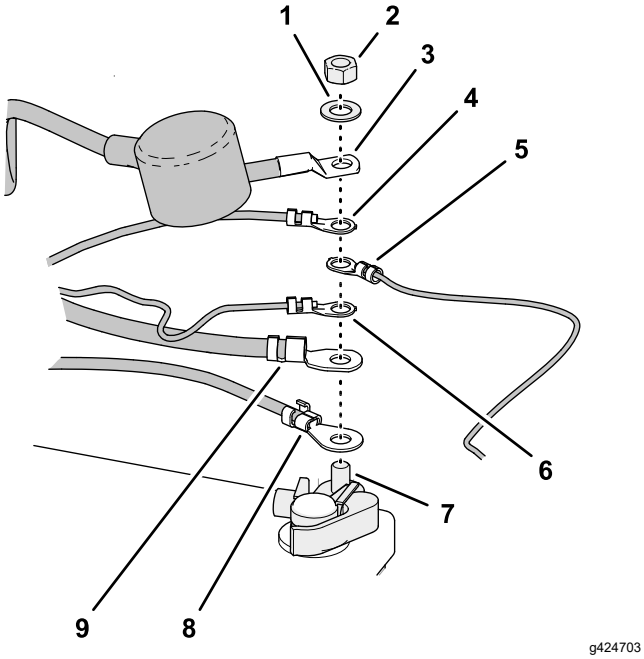

Figure 194

1. Washer 1/4 inch (quick-connect clamp)
2. Hex nut 1/4 inch (quick-connect clamp)
3. Battery-cable terminal (positive)—to the engine starter
4. Ring terminal—24 cm (9-1/2 inch) kit sprayer-harness branch (unlabeled)
5. Ring terminal—21.6 cm (8-1/2 inch) machine harness branch (labeled TO BATTERY POSITIVE)
6. Ring terminal—258 cm (101-1/2 inch) navigation-data and electrical harness branch (not labeled—red wire insulation)
7. Threaded post—quick-connect clamp (positive battery post)
8. Battery-cable terminal (positive)—to the alternator (50 A)
9. Ring terminal—165 cm (65 inch) modem power harness branch (labeled BATTERY)

3. Assemble the hex nut (1/4 inch) and washer (1/4 inch) onto the threaded post, and torque the nut to 1017 to 1234 N·cm (90 to 110 in-lb).
4. Align the insulator cover of the positive battery cable to the starter over the threaded post.
5. Assemble the following wire and cable terminals onto the threaded post of the negative battery terminal in the following order:

   Important: **Ensure that the battery-cable terminal (negative) to the engine and chassis ground is positioned at the top of the stack of terminals on the threaded post.**

   A. Ring terminal—258 cm (101-1/2 inch) navigation-data and electrical harness branch (not labeled—black wire insulation)

   B. Ring terminal—165 cm (65 inch) modem power harness branch (labeled GROUND)

   C. Battery-cable terminal (negative)—to the engine and chassis ground

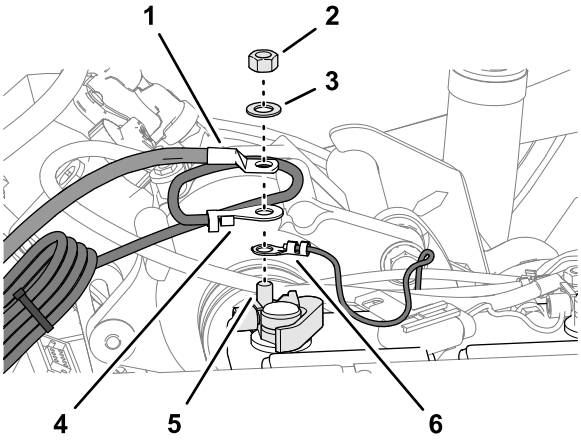

Figure 195

1. Battery-cable terminal (negative)—to the engine and chassis ground
2. Hex nut (1/4 inch—quick-connect clamp)
3. Washer (1/4 inch—quick-connect clamp)
4. Ring terminal—165 cm (65 inch) modem power harness branch (labeled GROUND)
5. Threaded post—quick-connect clamp (negative battery post)
6. Ring terminal—258 cm (101-1/2 inch) navigation-data and electrical harness branch (not labeled—black wire insulation)

Securing the Harness

1. Gather the excess length of the data harness against the right, upper-frame tube.

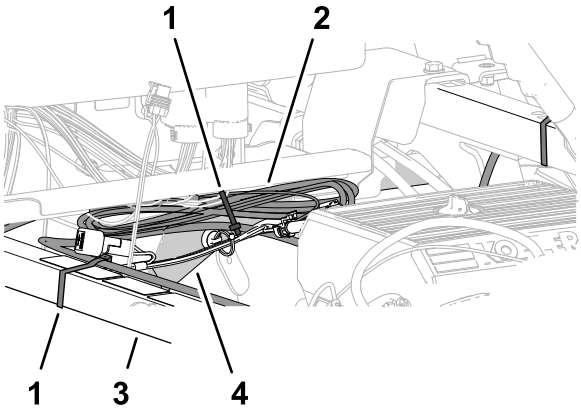

Figure 196

1. Cable tie
2. Data-harness bundle
3. Shock-support tube
4. Right, upper-frame tube

2. Align the data harness to the shock-support tube, and secure the harness to the tube with a cable tie.
3. Align the data-harness bundle to the right, upper-frame tube, and secure the harness bundle to the frame tube with a cable tie.
4. Ensure that there is clearance between the pulleys and belts and the data harness, battery harness, kit wire harness, and battery cables.

   Secure the wire harness and cables with cable ties as needed to provide clearance away from the belts and pulleys.

37

Removing the Rate-Control Switch

Parts needed for this procedure:

1	Switch plug

Procedure

1. Remove the 4 flange head screws (1/4 x 1/2 inch) that secure the 3-switch panel to the control console.

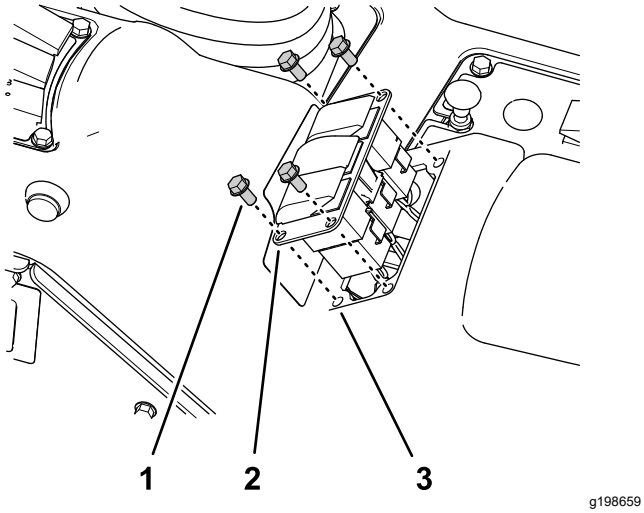

Figure 197

1. Flange head screw (1/4 x 1/2 inch)
2. 3-switch panel
3. Opening (control console)

2. Squeeze the lock tabs of the rate-control switch together and push up the switch out of the 3-switch panel.

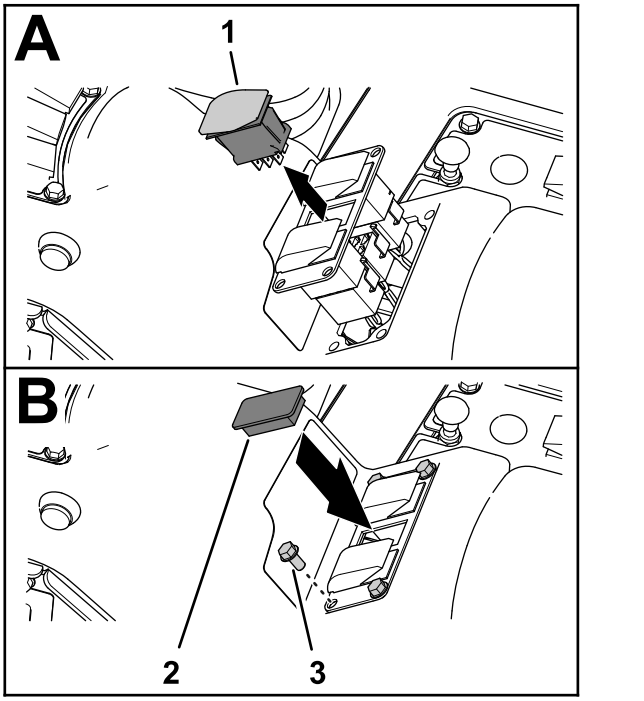

Figure 198

1. Rate-control switch
2. Switch plug
3. Flange head screw (1/4 x 1/2 inch)

3. Disconnect the 8-socket connector of the machine wire harness (labeled **Rate Switch**) from the 8-pin connector of the switch.

   Note: You no longer need the rate switch that you removed from the machine.
4. Route the branch of the front harness for the rate switch through the opening in the 3-switch panel and secure the wiring branch against an adjacent wire branch with a cable tie.
5. Assemble the 3-switch panel to the control console ith the 4 flange head screws (1/4 x 1/2 inch) that you removed in step 1.
6. Align the switch plug to the opening in the 3-switch panel where you removed the rate switch.
7. Insert the switch plug into the 3-switch panel until the plug snaps into the panel securely.

38

Installing the Hood and the Front Fenders

Parts needed for this procedure:

13	Push-in fastener

Installing the Hood

1. Align the hood holes in the hood with the holes in the dash panel and frame of the machine.

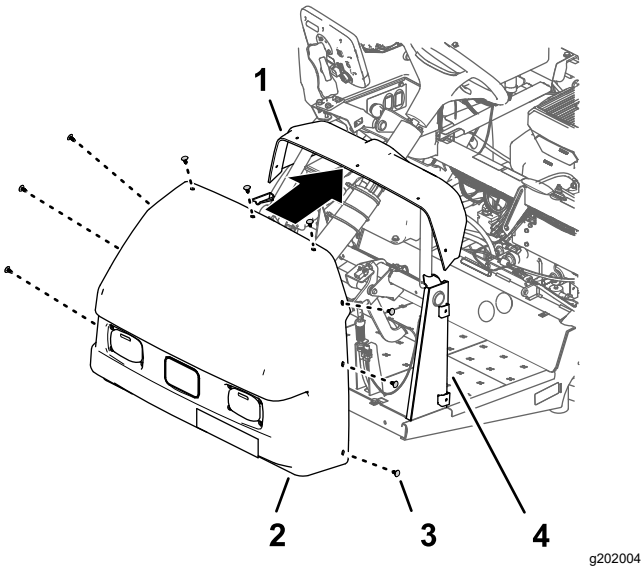

Figure 199

1. Dash panel
2. Hood
3. Push-in fastener
4. Dash support

2. Secure the hood to the dash and frame with 9 push-in fastener.
3. Connect the 2 electrical connectors (2-socket) of the machine wire harness from the 2-pin connectors of the left and right headlights.

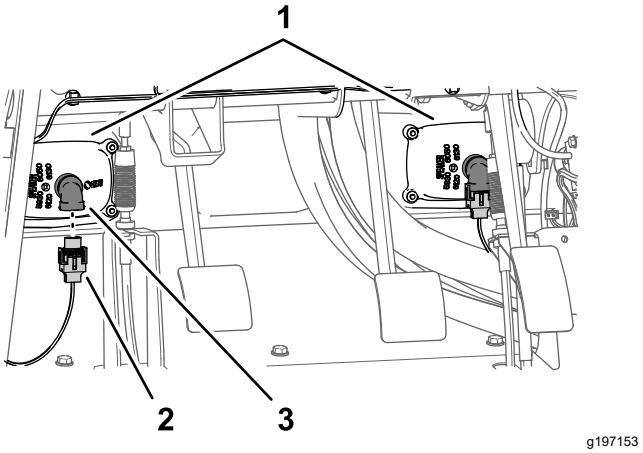

Figure 200

1. Headlights
2. 2-socket connector (machine wire harness)
3. 2-pin connector (headlight)

Installing the Left Front Fender

1. Align the inner-fender shroud to the left, upper- and left, lower-frame tubes.

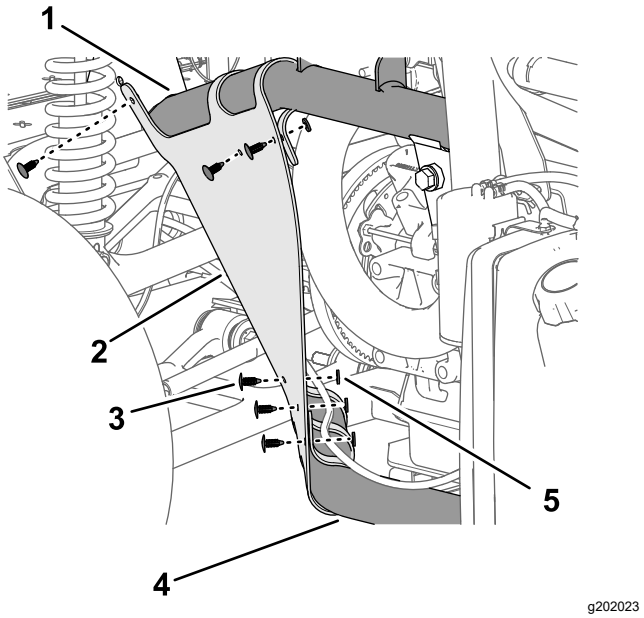

Figure 201

1. Left, upper-frame tube
2. Inner-fender shroud
3. Push-in fastener
4. Left, lower-frame tube
5. Washer (9/16 x 1/2 inch)

2. Secure the inner-fender shroud to the frame tubes with the 6 push-in fasteners.
3. Align the holes in the fender with the holes in the frame of the machine.

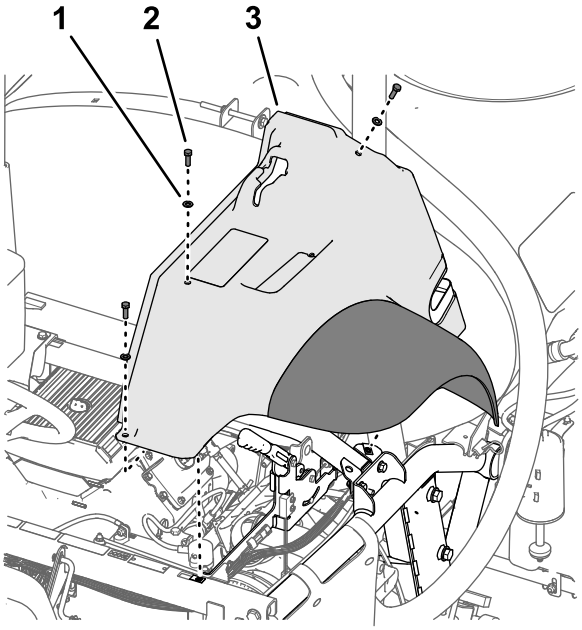

g197152

Figure 202

1. Washer (5/16 inch)
2. Bolt (5/16 x 1 inch)
3. Left, front fender

4. Loosely assemble the fender to the frame with the previously removed 3 bolts (5/16 x 1 inch) and 3 washers (5/16 inch).
5. Secure the fender to the frame channel with the 2 push-in fasteners.

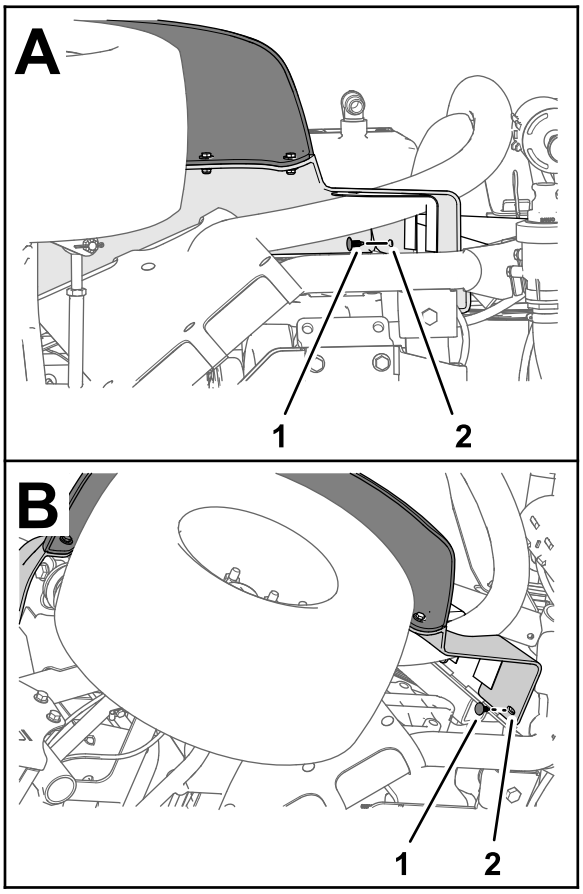

g264614

Figure 203

1. Push-in fastener
2. Left, front fender

6. Torque the bolt (5/16 x 1 inch) to 1978 to 2542 N·cm (175 to 225 in-lb).
7. Repeat steps 1 through 6 for the inner-fender shroud and fender at the other side of the machine.

Installing the Right Front Fender

1. Align the inner-fender shroud to the right, upper and right, lower-frame tubes.

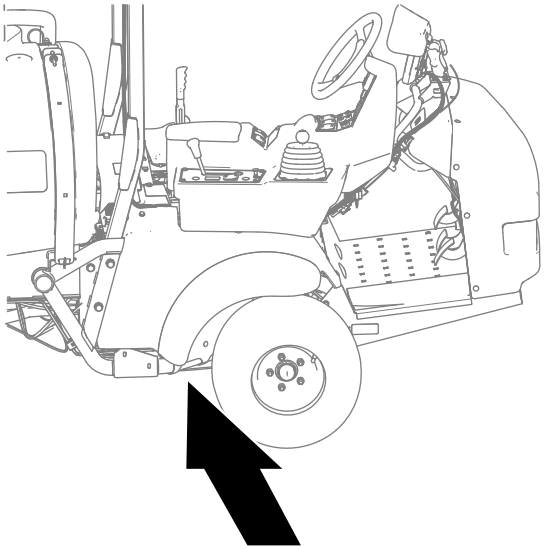

g323169

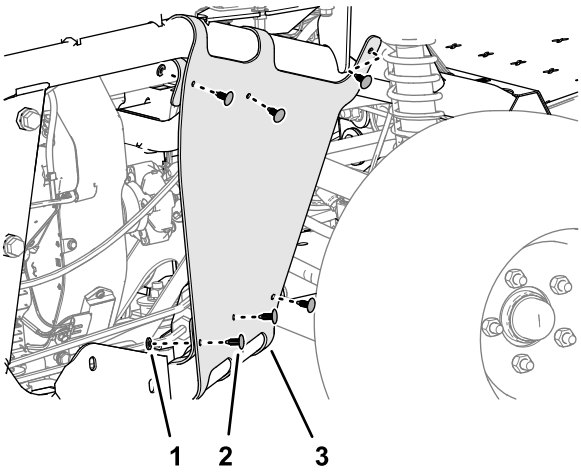

g323162

Figure 204

1. Washer (9/16 x 1/2 inch)
2. Push-in fastener
3. Inner-fender shroud

2. Secure the inner-fender shroud to the frame tubes with the 6 push-in fasteners and 5 washers (9/16 x 1/2 inch).
3. Align the right, front fender to the machine and align the holes in the fender with the holes in the frame.

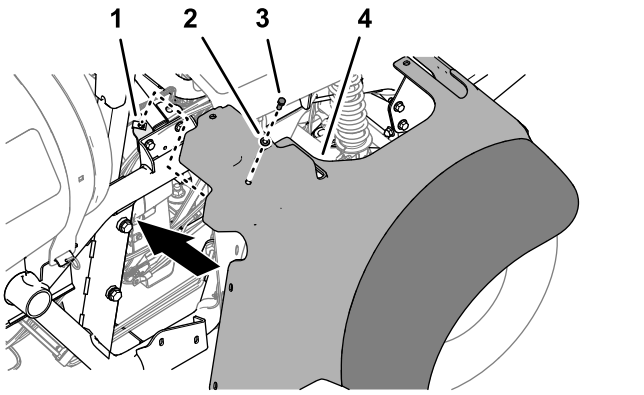

g323164

Figure 205

1. Clip nut (cross-member support)
2. Washer (5/16 inch)
3. Capscrew (5/16 x 1 inch)
4. Right, front fender

4. Secure right, front fender to the clip nut of the cross-member support with the capscrew (5/16 x 1 inch) and washer (5/16 inch).
5. Secure the right, front fender to the roll bar mounting channel with 2 push-in fasteners.

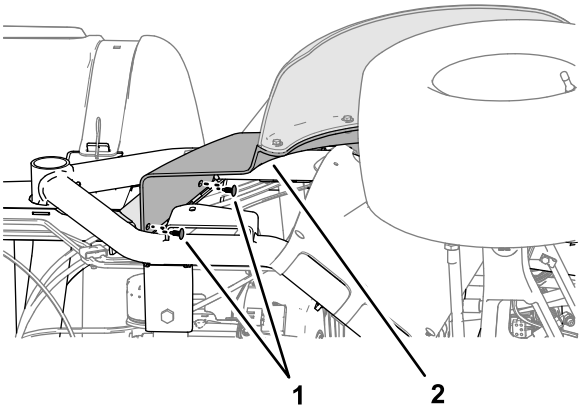

g323166

Figure 206

1. Push-in fastener
2. Right, front fender

6. Align the hole in the right, front fender with the hole in the platform floor and secure the fender to the floor with a capscrew (5/16 x 1 inch) and washer (5/16 inch).

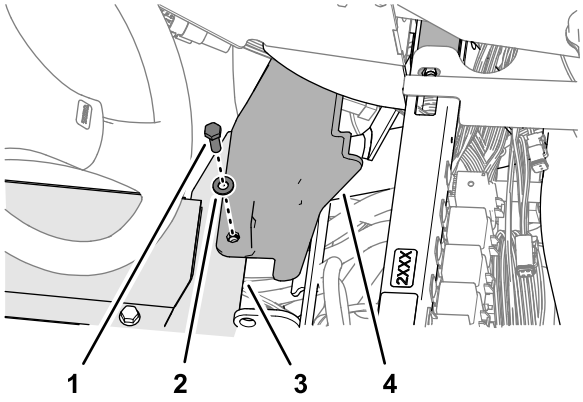

Figure 207

1. Capscrew (5/16 x 1 inch)
2. Washer (5/16 inch)
3. Platform floor
4. Right, front fender

7. Align the hole in the bottom console cover to the hole in the shock-support tube and the hole in the end console cover to the hole in the cross-member tube.

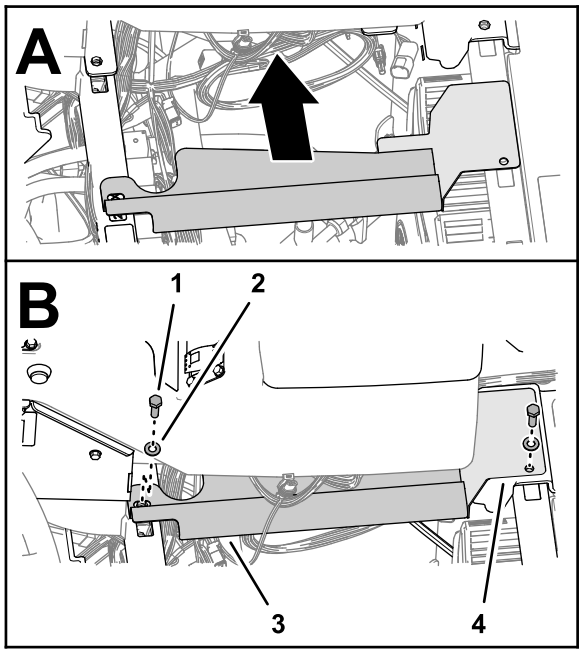

Figure 208

1. Capscrew (5/16 x 1 inch)
2. Washer (5/16 inch)
3. Console cover (bottom)
4. Console cover (end)

8. Secure the covers to the tubes with 2 capscrews (5/16 x 1 inch) and 2 washers (5/16 inch).

39

Installing the Engine-Access Panel and the Seat

No Parts Required

Installing the Engine-Access Panel

Machines without the Tank Rinse Kit

1. Align the latches of the engine access panel with the bushings in the panel-support brackets on the roll bar.

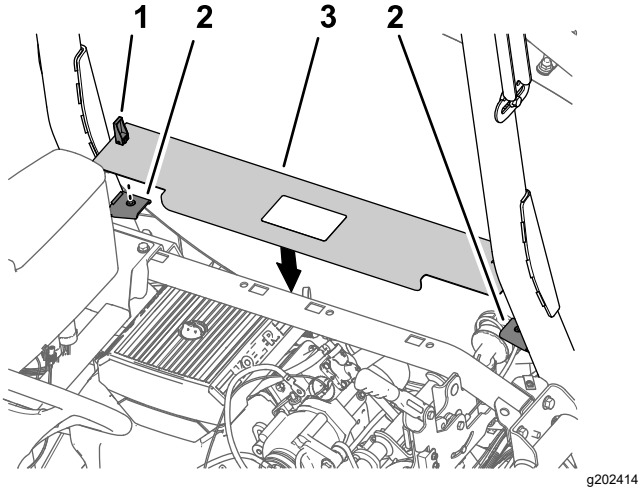

Figure 209

1. Latch
2. Panel-support bracket
3. Engine access panel

2. Assemble the panel onto the brackets.
3. Rotate the handles latches down to secure the panel to the brackets.

Installing the Seat

1. Align the seat and seat plate to the chassis of the machine.

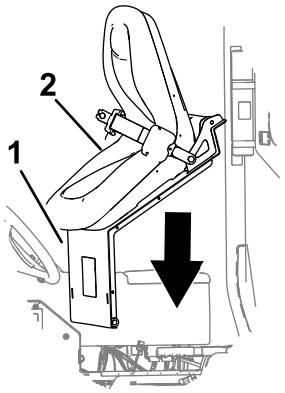

g202000

Figure 210

1. Seat plate
2. Seat

2. Align the holes in the pivot fittings of the seat pan with the holes in the chassis bracket.

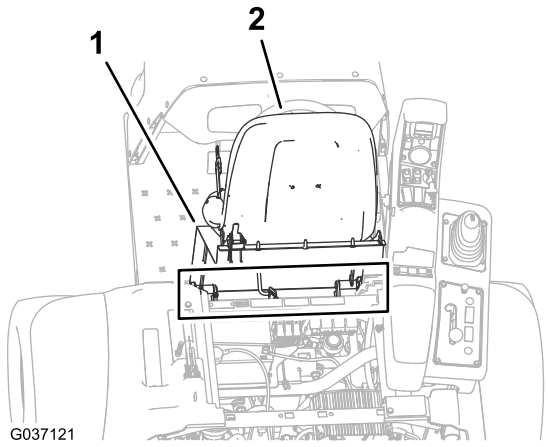

g037121

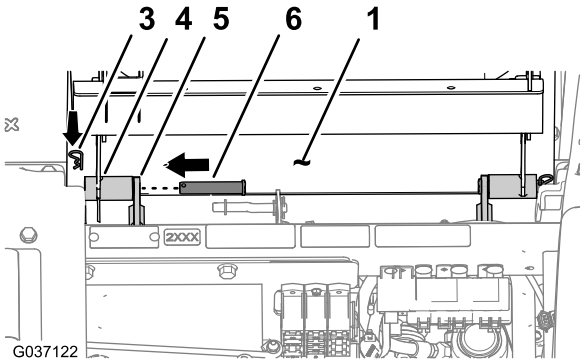

g202002

Figure 211

1. Seat plate
2. Seat
3. Hairpin
4. Pivot fitting (seat pan)
5. Chassis bracket
6. Pivot pin

3. Assemble the seat pan to the chassis brackets with the 2 pivot pins.
4. Secure the pivot pins to the machine with the 2 hairpins.
5. Assemble the prop rod to the bracket of the seat with the washer and hairpin.

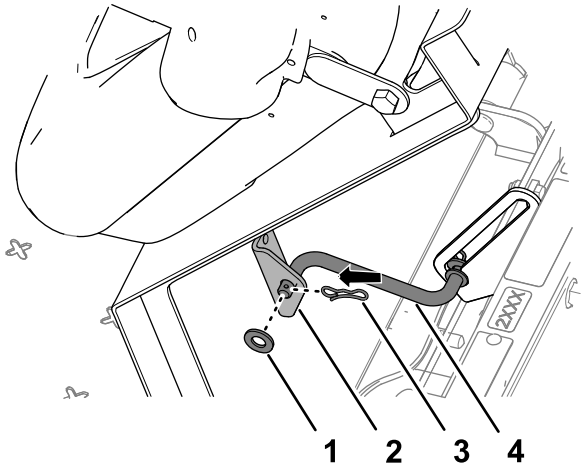

g202001

Figure 212

1. Washer
2. Bracket (seat)
3. Hairpin
4. Prop rod

6. Plug the 2-socket connector of the machine wire harness into the connector for the seat switch until the connectors latch securely.

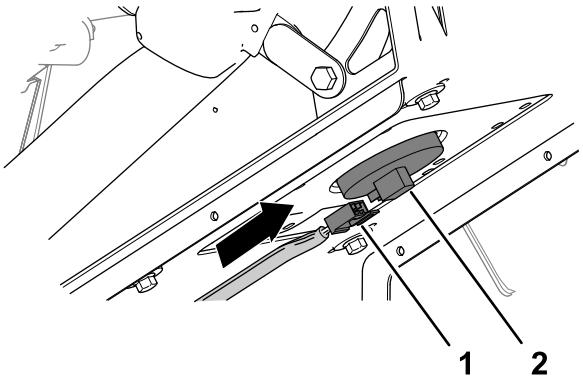

g202003

Figure 213

1. 2-socket connector (machine wire harness)
2. Seat-switch connector

7. Rotate the seat forward slightly, remove the prop rod from the detent, rotate the seat down until the seat latches securely.

40

Programming the Machine Settings

No Parts Required

Procedure

1. Insert the key into the key switch and rotate it to the ON position.

   The splash screen appears in the InfoCenter display and the indicator light illuminates briefly.

   Note: Do not start the engine.

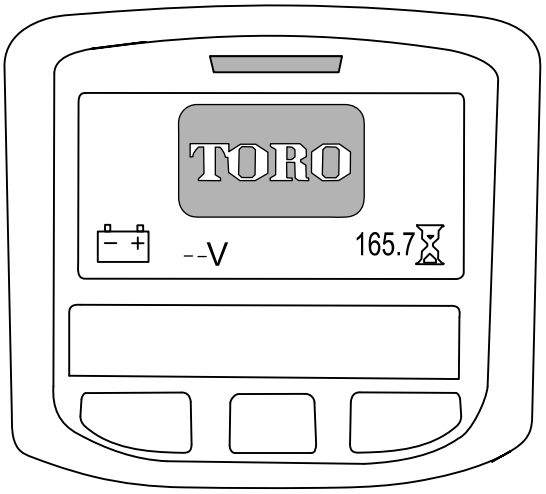

g202877

Figure 214

2. At the Home screen, press the center button on the InfoCenter to access the navigation screen.

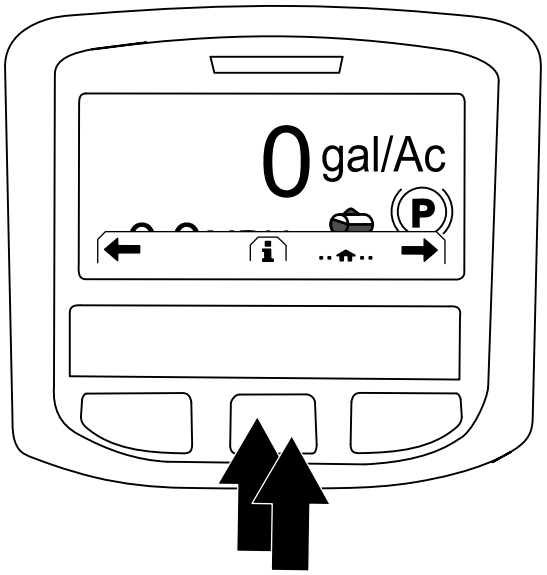

g202868

Figure 215

3. Press the center button on the InfoCenter to access the Main Menu.
4. At the MAIN MENU screen, press the center button to navigate to the SETTING option, and press the right button to select the option.

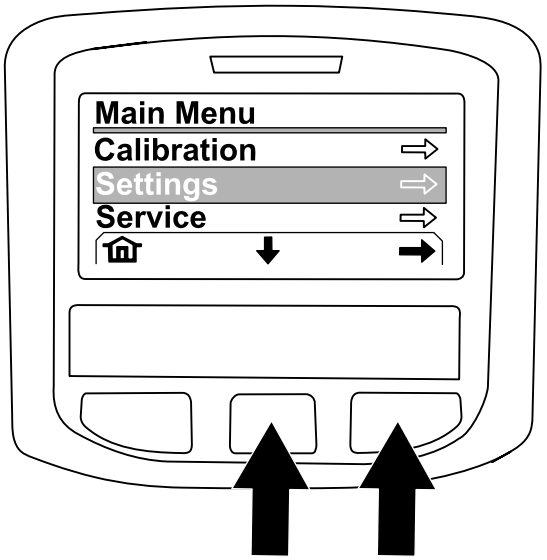

g202874

Figure 216

5. At the SETTING screen, press the center button to navigate to the PROTECTED SETTINGS option, and press the right button to select the option.

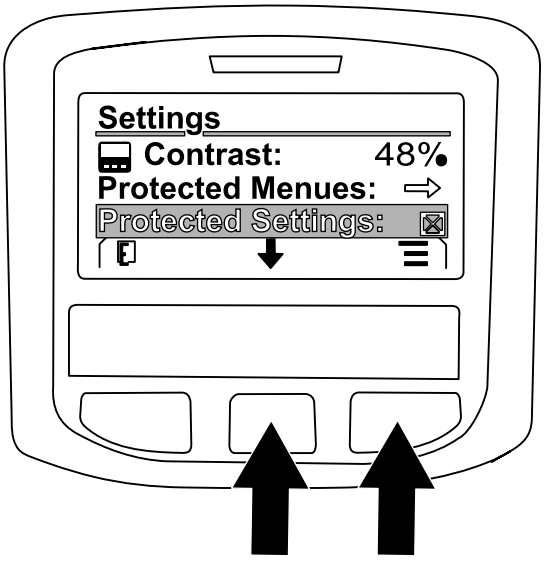

g202869

Figure 217

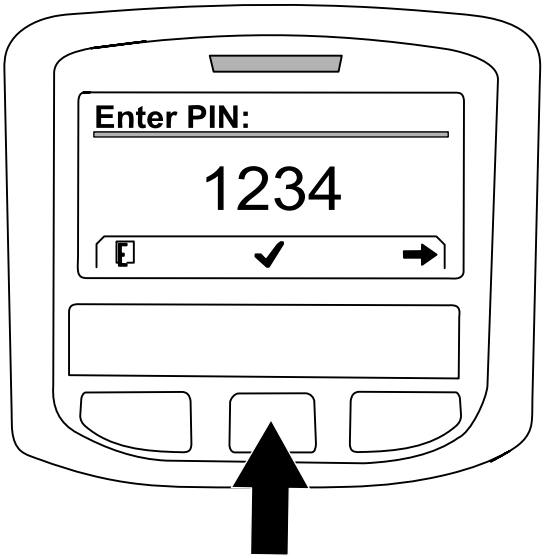

g202871

Figure 219

6. Enter the PIN code as follows:
   A. Press the center button as needed to enter the PIN code number for the left position.

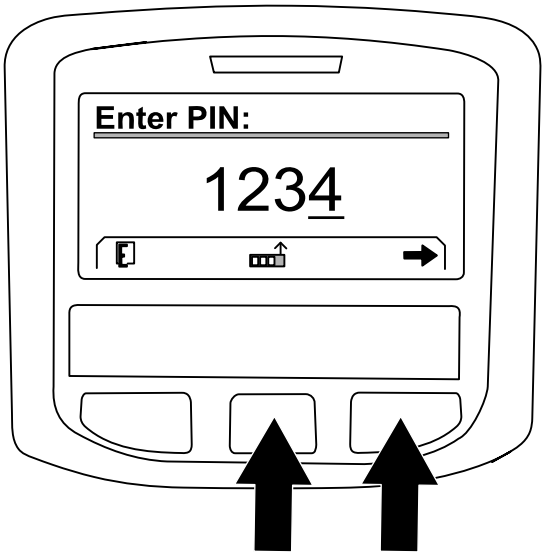

g202870

Figure 218

   B. Press the right button to navigate to the next PIN code number position.
   C. Repeat steps A and B for the 3 other PIN code number positions.
   D. When all the PIN code numbers are entered press the right button and then press the center button to enter the PIN code.

      The indicator light illuminates briefly.

7. Press the center button to navigate to the GEOLINK option, and press the right button to set the option.

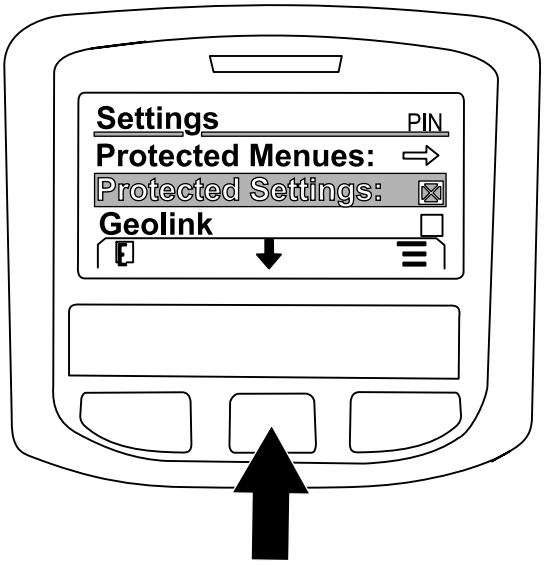

g202875

Figure 220

   The GeoLink confirmation screen displays in the InfoCenter.

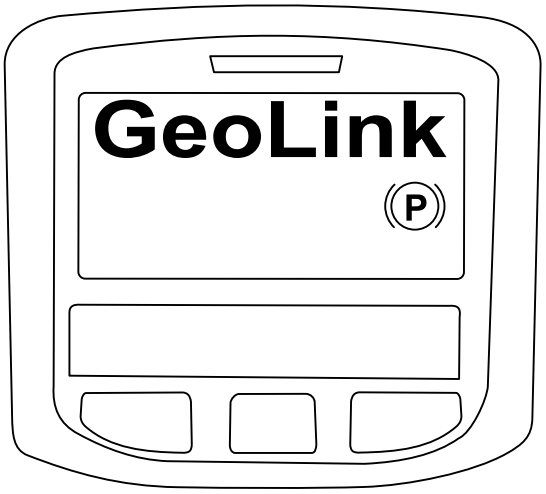

g202872

Figure 221

8. Rotate the ignition switch to the OFF position and then to the ON position.
9. The GEOLINK splash screen initially appears when you rotate the key switch to the ON position.

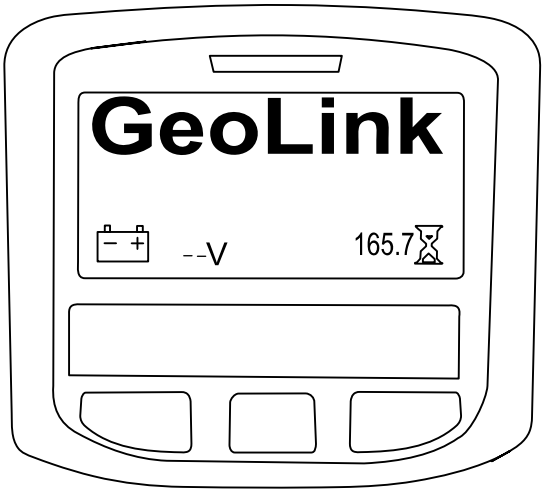

g202878

Figure 222

41

Powering the GeoLink Components

No Parts Required

Procedure

1. Turn the ignition key to the RUN (gasoline) or PREHEAT/RUN (diesel) position.
2. Verify that the following components indicate that each receives power:
   - Control console—displays graphics and text



g423361

Figure 223

   - Satellite receiver—the PWR indicator illuminates

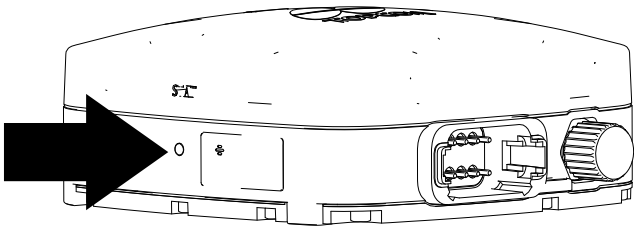

g423320

Figure 224

   - Modem—the LED indicators illuminate.

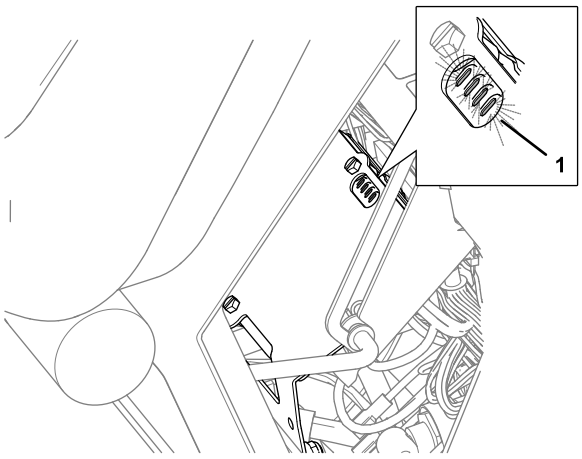

g316148

Figure 225

1. LED Indicators (passenger seat base)

- Automatic section controller—the STATUS indicator illuminates

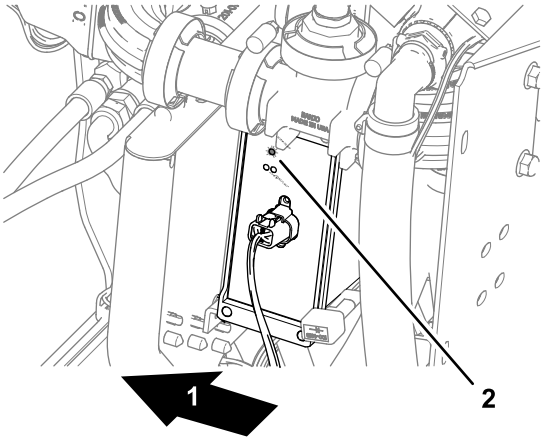

g302923

Figure 226

1. Back of the machine
2. STATUS indicator (automatic section controller)

3. Turn the ignition key to the OFF position.
4. Verify that power is shut off at the following components:
   - Control console
   - Satellite receiver
   - Automatic section controller

42

Completing the Software Setup

No Parts Required

Procedure

Refer to the *Software Guide* for your GeoLink system.

Complete the following procedures:

1. Verify the software version.
2. Select the units of measure.
3. Create a field.
4. Create a new product and application rate.
5. Create a spray task.
6. Balance the section valves
7. Checking the spray system.
8. Balance the agitation bypass valve.
9. Calibrate the flow meter.
10. Verify the cellular status.
11. Calibrate the compass at the distributor location.
12. Clear the NVRAM at the customer location.
13. Calibrate the compass at the customer location.

The Toro Warranty

Two-Year or 1,500 Hours Limited Warranty

Conditions and Products Covered

The Toro Company warrants your Toro Commercial product (“Product”) to be free from defects in materials or workmanship for 2 years or 1,500 operational hours*, whichever occurs first. This warranty is applicable to all products with the exception of Aerators (refer to separate warranty statements for these products). Where a warrantable condition exists, we will repair the Product at no cost to you including diagnostics, labor, parts, and transportation. This warranty begins on the date the Product is delivered to the original retail purchaser.
* Product equipped with an hour meter.

Instructions for Obtaining Warranty Service

You are responsible for notifying the Commercial Products Distributor or Authorized Commercial Products Dealer from whom you purchased the Product as soon as you believe a warrantable condition exists. If you need help locating a Commercial Products Distributor or Authorized Dealer, or if you have questions regarding your warranty rights or responsibilities, you may contact us at:

Toro Commercial Products Service Department
8111 Lyndale Avenue South
Bloomington, MN 55420-1196

952–888–8801 or 800–952–2740
E-mail: commercial.warranty@toro.com

Owner Responsibilities

As the product owner, you are responsible for required maintenance and adjustments stated in your *Operator's Manual*. Repairs for product issues caused by failure to perform required maintenance and adjustments are not covered under this warranty.

Items and Conditions Not Covered

Not all product failures or malfunctions that occur during the warranty period are defects in materials or workmanship. This warranty does not cover the following:

- Product failures which result from the use of non-Toro replacement parts, or from installation and use of add-on, or modified non-Toro branded accessories and products.
- Product failures which result from failure to perform recommended maintenance and/or adjustments.
- Product failures which result from operating the Product in an abusive, negligent, or reckless manner.
- Parts consumed through use that are not defective. Examples of parts which are consumed, or used up, during normal Product operation include, but are not limited to, brake pads and linings, clutch linings, blades, reels, rollers and bearings (sealed or greasable), bed knives, spark plugs, castor wheels and bearings, tires, filters, belts, and certain sprayer components such as diaphragms, nozzles, flow meters, and check valves.
- Failures caused by outside influence, including, but not limited to, weather, storage practices, contamination, use of unapproved fuels, coolants, lubricants, additives, fertilizers, water, or chemicals.
- Failure or performance issues due to the use of fuels (e.g. gasoline, diesel, or biodiesel) that do not conform to their respective industry standards.
- Normal noise, vibration, wear and tear, and deterioration. Normal “wear and tear” includes, but is not limited to, damage to seats due to wear or abrasion, worn painted surfaces, scratched decals or windows.

Parts

Parts scheduled for replacement as required maintenance are warranted for the period of time up to the scheduled replacement time for that part. Parts replaced under this warranty are covered for the duration of the original product warranty and become the property of Toro. Toro will make the final decision whether to repair any existing part or assembly or replace it. Toro may use remanufactured parts for warranty repairs.

Deep Cycle and Lithium-Ion Battery Warranty

Deep cycle and Lithium-Ion batteries have a specified total number of kilowatt-hours they can deliver during their lifetime. Operating, recharging, and maintenance techniques can extend or reduce total battery life. As the batteries in this product are consumed, the amount of useful work between charging intervals will slowly decrease until the battery is completely worn out. Replacement of worn out batteries, due to normal consumption, is the responsibility of the product owner.
Note: (Lithium-Ion battery only): Refer to the battery warranty for additional information.

Lifetime Crankshaft Warranty (ProStripe 02657 Model Only)

The Prostripe which is fitted with a genuine Toro Friction Disc and Crank-Safe Blade Brake Clutch (integrated Blade Brake Clutch (BBC) + Friction Disc assembly) as original equipment and used by the original purchaser in accordance with recommended operating and maintenance procedures, are covered by a Lifetime Warranty against engine crankshaft bending. Machines fitted with friction washers, Blade Brake Clutch (BBC) units and other such devices are not covered by the Lifetime Crankshaft Warranty.

Maintenance is at Owner’s Expense

Engine tune-up, lubrication, cleaning and polishing, replacement of filters, coolant, and completing recommended maintenance are some of the normal services Toro products require that are at the owner’s expense.

General Conditions

Repair by an Authorized Toro Distributor or Dealer is your sole remedy under this warranty.

The Toro Company is not liable for indirect, incidental or consequential damages in connection with the use of the Toro Products covered by this warranty, including any cost or expense of providing substitute equipment or service during reasonable periods of malfunction or non-use pending completion of repairs under this warranty. Except for the Emissions warranty referenced below, if applicable, there is no other express warranty. All implied warranties of merchantability and fitness for use are limited to the duration of this express warranty.

Some states do not allow exclusions of incidental or consequential damages, or limitations on how long an implied warranty lasts, so the above exclusions and limitations may not apply to you. This warranty gives you specific legal rights, and you may also have other rights which vary from state to state.

Note Regarding Emissions Warranty

The Emissions Control System on your Product may be covered by a separate warranty meeting requirements established by the U.S. Environmental Protection Agency (EPA) and/or the California Air Resources Board (CARB). The hour limitations set forth above do not apply to the Emissions Control System Warranty. Refer to the Engine Emission Control Warranty Statement supplied with your product or contained in the engine manufacturer’s documentation.

Countries Other than the United States or Canada

Customers who have purchased Toro products exported from the United States or Canada should contact their Toro Distributor (Dealer) to obtain guarantee policies for your country, province, or state. If for any reason you are dissatisfied with your Distributor's service or have difficulty obtaining guarantee information, contact your Authorized Toro Service Center.



Count on it.