Form No. 3351-177

1128OXE Power Max™ Snowthrower

Model No. 38650—Serial No. 250000001 and Up

Operator's Manual

Introduction

Read this manual carefully to learn how to operate and maintain your product properly and to avoid injury and product damage. You are responsible for operating the product properly and safely.

You may contact Toro directly at www.Toro.com for product and accessory information, help finding a dealer, or to register your product.

Whenever you need service, genuine Toro parts, or additional information, contact an Authorized Service Dealer or Toro Customer Service and have the model and serial numbers of your product ready. The illustration below identifies the location of the model and serial numbers on the product. Write the numbers in the space provided below:

Model #:

Serial #:

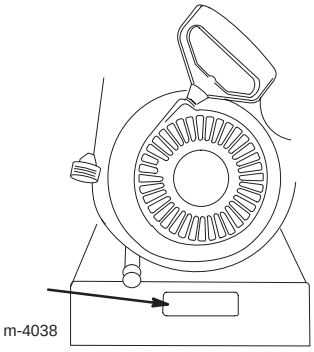

m-4038

This manual identifies potential hazards and has safety messages identified by the following words:

- **Danger** signals an extreme hazard that **will** cause serious injury or death if you do not follow the recommended precautions.
- **Warning** signals a hazard that **may** cause serious injury or death if you do not follow the recommended precautions.
- **Caution** signals a hazard that may cause minor or moderate injury if you do not follow the recommended precautions.

This manual uses 2 other words to highlight information. **Important** calls attention to special mechanical information and **Note:** emphasizes general information worthy of special attention.

Warning

California

Proposition 65 Warning

The engine exhaust from this product contains chemicals known to the State of California to cause cancer, birth defects, or other reproductive harm.

This spark ignition system complies with Canadian ICES-002.

The enclosed Engine Owner's Manual is supplied for information regarding The U.S. Environmental Protection Agency (EPA) and the California Emission Control Regulation of emission systems, maintenance and warranty.

Keep this engine Owner's Manual with your unit. Should this engine Owner's Manual become damaged or illegible, replace immediately. Replacements may be ordered through the engine manufacturer.

Safety

This snowthrower meets or exceeds the B71.3 specifications of the American National Standards Institute in effect at the time of production.

Read and understand the contents of this manual before the engine is ever started.

⚠ This is the safety alert symbol. It is used to alert you to potential personal injury hazards. Obey all safety messages that follow this symbol to avoid possible injury or death.

Improperly using or maintaining this snowthrower could result in injury or death. To reduce this potential, comply with the following safety instructions.

The following instructions have been adapted from the ANSI/OPEI standard B71.3–1995 and the ISO 8437:1989 standard.

© 2004—The Toro Company
8111 Lyndale Ave., Bloomington, MN 55420, USA

Printed in the USA
All Rights Reserved

Original Instructions (EN)
Register your product at www.Toro.com

Training

- Read the operator's manual carefully. Be thoroughly familiar with the controls and the proper use of the equipment. Know how to stop the unit and disengage the controls quickly.
- Never allow children to operate the snowthrower. Never allow adults to operate the snowthrower without proper instruction.
- Keep the area of operation clear of all persons (particularly small children) and pets.
- Exercise caution to avoid slipping or falling, especially when operating the snowthrower in reverse.

Preparation

- Thoroughly inspect the area where you will use the snowthrower. Remove all doormats, sleds, boards, wires, and other foreign objects.
- Before starting the engine, disengage all clutches. Shift the snowthrower into neutral as well, if applicable.
- Do not operate the snowthrower without wearing adequate winter garments. Wear footwear that will improve your footing on slippery surfaces.
- Handle fuel with care; it is highly flammable.
  - Use an approved fuel container.
  - Never add fuel to a running or hot engine.
  - Fill the fuel tank outdoors with extreme care. Never fill the fuel tank indoors.
  - Replace the fuel tank cap securely and wipe up any spilled fuel.
- Use only the power cord supplied with the snowthrower and a receptacle appropriate for use with the power cord for electric-start motors.
- Adjust the auger housing height to clear a gravel or crushed-rock surface.
- Never attempt to make any adjustments while the engine is running, except where specifically recommended by Toro.
- Let the engine and the snowthrower adjust to the outdoor temperature before starting to clear snow.
- Operating any powered machine can result in foreign objects being thrown into the eyes. Always wear safety glasses or eye shields while operating, adjusting, or repairing the snowthrower.

Operation

- Do not put your hands or feet near or under rotating parts. Keep clear of the discharge opening at all times.
- Exercise extreme caution when crossing gravel drives, walks, or roads. Stay alert for hidden hazards or traffic.
- After striking a foreign object, stop the engine, remove the wire from the spark plug, thoroughly inspect the snowthrower for any damage, and repair the damage before operating the snowthrower.
- If the unit should start to vibrate abnormally, stop the engine and check immediately for the cause. Vibration is generally a warning of trouble.
- Stop the engine whenever you leave the operating position, before unclogging the auger/impeller housing or discharge chute, and when making any repairs, adjustments, or inspections.
- When cleaning, repairing, or inspecting, make certain that the auger/impeller and all moving parts have stopped. Disconnect the spark plug wire and keep the wire away from the spark plug to prevent someone from accidentally starting the engine.
- Do not run the engine indoors, except when starting it and for moving the snowthrower in or out of the building. Open the outside doors; exhaust fumes are dangerous.
- Do not clear snow across the face of slopes. Exercise extreme caution when changing direction on slopes. Do not attempt to clear steep slopes.
- Never operate the snowthrower without proper guards or other safety devices in place.
- Never operate the snowthrower near glass enclosures, automobiles, window wells, and drop-offs without properly adjusting the snow discharge angle. Keep children and pets away.
- Do not overload the machine capacity by attempting to clear snow at too fast a rate.
- Look behind and use care when backing up with the snowthrower.
- Never direct the discharge at bystanders or allow anyone in front of the unit.
- Disengage the power to the auger/impeller when the snowthrower is being transported or when not in use.
- Use only attachments and accessories approved by Toro, such as wheel weights, counterweights, and cabs. (Contact an Authorized Service Dealer for accessories available for your snowthrower.)

- Never operate the snowthrower without good visibility or light. Always be sure of your footing, and keep a firm hold on the handle. Walk; never run.

Maintenance and Storage

- Check all fasteners at frequent intervals for proper tightness to be sure that the equipment is in safe working condition.
- Never store the machine with fuel in the fuel tank inside a building where ignition sources are present, such as hot water and space heaters and clothes dryers. Allow the engine to cool before storing in any enclosure.
- Always refer to this operator's manual for important details if the snowthrower is to be stored for an extended period.
- Maintain or replace safety and instruction labels when necessary.

Toro Snowthrower Safety

The following list contains safety information specific to Toro products or other safety information that you must know.

- **Rotating rotor auger/impeller can cut off or injure fingers or hands.** Stay behind the handles and away from the discharge opening while operating the snowthrower. **Keep your face, hands, feet, and any other part of your body or clothing away from moving or rotating parts.**
- Before adjusting, cleaning, inspecting, troubleshooting, or repairing the snowthrower, **stop the engine, remove the key, and wait for all moving parts to stop. Disconnect the wire from the spark plug and keep it away from the spark plug to prevent someone from accidentally starting the engine.**
- To unclog the discharge chute, stay in the operating position and release the left hand (traction) lever. While running the auger/impeller, push down on the handles to raise the front of the snowthrower a few inches (centimeters) off the pavement. Then lift the handles quickly to bump the front of the snowthrower on the pavement. Repeat if necessary until a stream of snow comes out the discharge chute.
- If you cannot unclog the discharge chute by bumping the front of the snowthrower, **stop the engine, wait for all moving parts to stop, and use a stick; never use your hand.**
- Do not wear loose-fitting clothing that could get caught in moving parts.
- If a shield, safety device, or decal is damaged, illegible, or lost, repair or replace it before beginning operation.
- **Do not** smoke while handling gasoline.
- Do not touch the engine while it is running or soon after it has stopped because the engine may be hot enough to cause a burn.
- When storing the snowthrower for more than 30 days, drain the fuel from the fuel tank to prevent a potential hazard. Store fuel in an approved fuel container. Remove the key from the ignition switch before storing the snowthrower.
- Purchase only genuine Toro replacement parts and accessories.

Before Operating

Read and understand the contents of this manual before operating the snowthrower. Become familiar with all controls and know how to stop the engine quickly.

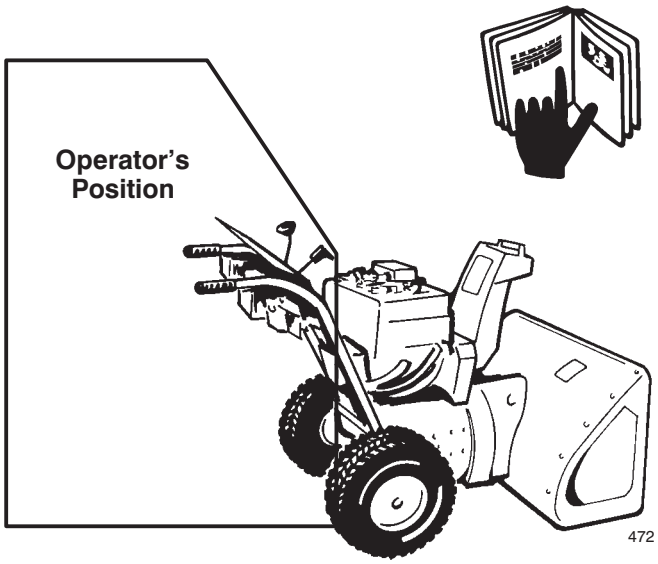

Caution: Improper use may result in loss of fingers, hands, or feet.

There is a high-speed impeller close to the opening.

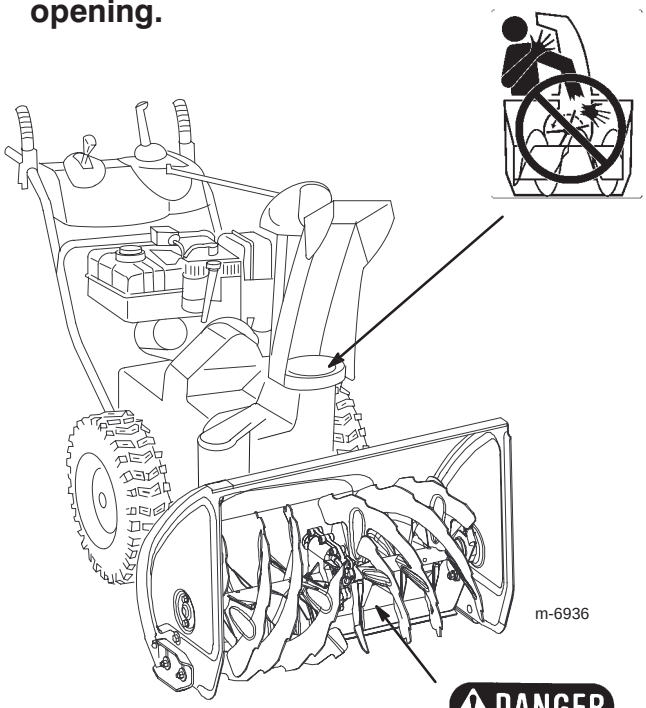

The low-speed auger has a moving pinch point close to the opening.



Safety/Instruction Decals

Important: Safety and instruction decals are located near areas of potential danger. Replace damaged decals.

1



53-7670

1. Cutting/dismembermentof foot, auger



106-4587

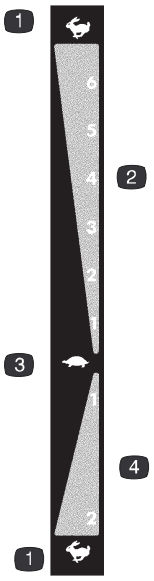

107-3825

1. Fast
2. Forward speeds
3. Slow
4. Reverse speeds



108-2967



Tecumseh Part No. 36501

1. Primer

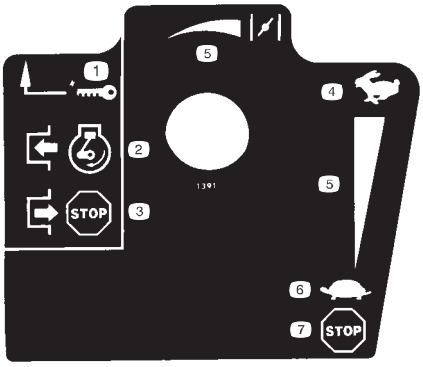

Tecumseh Part No. 35077

1. Key ignition
2. Engage to start the engine
3. Disengage to stop the engine
4. Fast
5. Increasing scale
6. Slow
7. Stop the engine



Tecumseh Part No. 37119

Product Overview

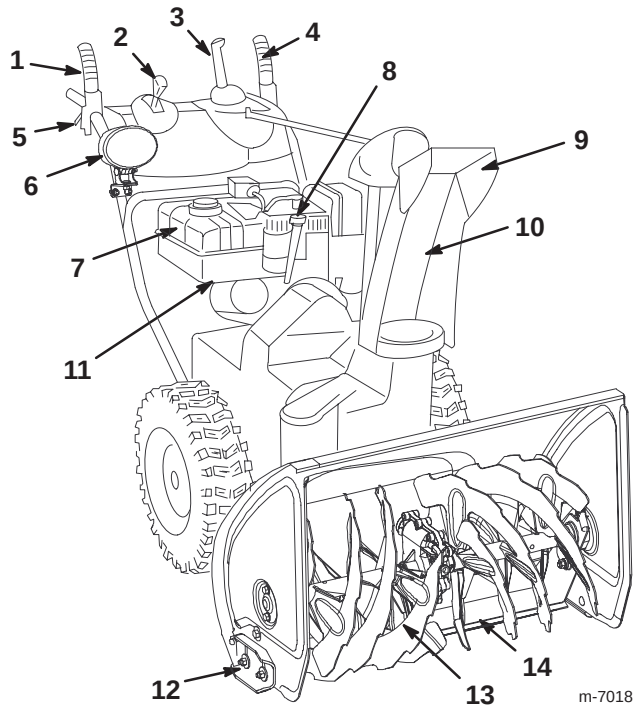

1. Auger/impeller lever
2. Speed selector lever
3. Quick Stick™ discharge chute control
4. Traction lever
5. Wheel clutch lever (2)
6. Headlight
7. Fuel tank
8. Engine oil fill tube/ dipstick
9. Chute deflector
10. Discharge chute
11. Fuel shutoff valve
12. Skid (2)
13. Auger
14. Scraper

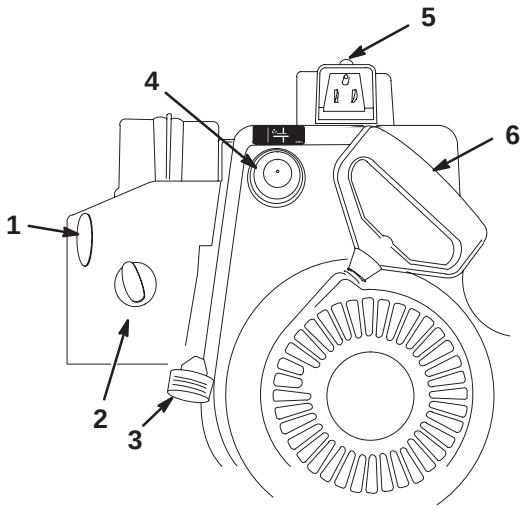

1. Ignition switch
2. Choke
3. Throttle
4. Primer
5. Electric starter
6. Recoil starter

Setup

Installing the Upper Handle Assembly

1. Lift and rotate the upper handle assembly and position it over the lower handle.

Note: Ensure that the 2 cables attached to the Quick Stick (A) are routed inside the upper handle legs and that the 2 lever cables and the wire for the headlight are not pinched between the handle sections.

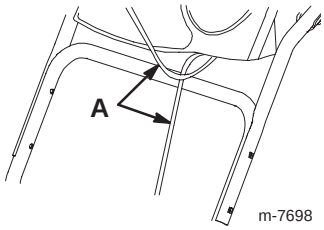

2. Secure the upper handle assembly with 4 handle bolts, 4 curved washers, and 4 locknuts from the loose parts bag.

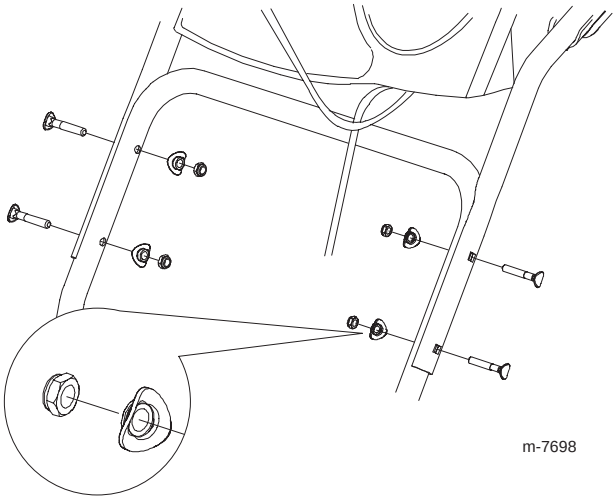

Installing the Wheel Clutch Cable Ends

1. Unwrap the cable ends from the lower handle.

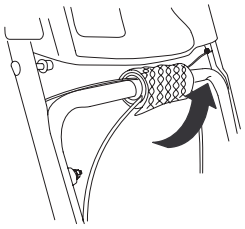

2. Route either the left or right cable end over the lower handle and insert the cable end into the hole in the corresponding wheel clutch lever (A).

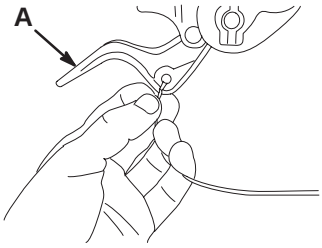

3. Remove the nut and washer from the handle, attach the cable clamp on the cable (A) to the handle, and hand tighten the nut.

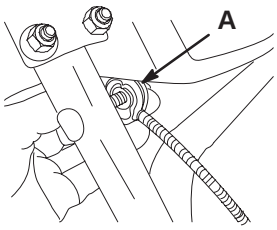

Important: Ensure that the curved side of the cable clamp is against the handle and that the cable is routed below the clamp bolt. The cable must be in a straight line from the cable clamp to the point where it attaches to the wheel clutch lever.

4. Pull the cable jacket down gently until the wheel clutch lever is down and the slack is out of the cable, then tighten the cable clamp nut securely.

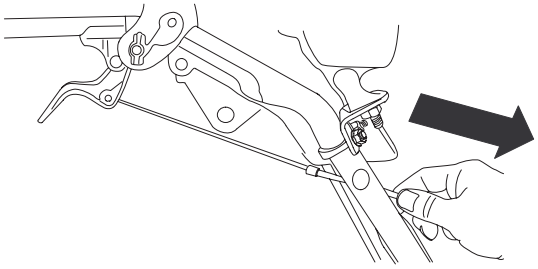

5. Squeeze the lever fully, then check the gap (A) between the bottom of the handle and the wheel clutch lever end.

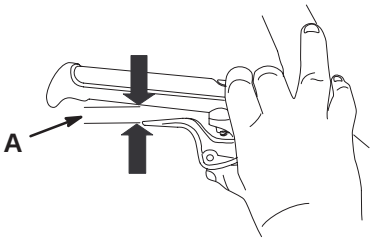

Note: The gap should be approximately the thickness of a pencil (1/4 inch or 6 mm). If it is greater, loosen the cable clamp nut, slide the cable jacket up slightly, tighten the cable clamp nut, and check the gap again.

6. Repeat steps 2 through 5 for the other cable.

Installing the Traction Control Linkage

1. Remove the hairpin cotter and washer from the the lower end of the speed control rod (A) and insert the lower end of the rod into the lower link arm (B) so that the bent end of the speed control rod faces rearward.

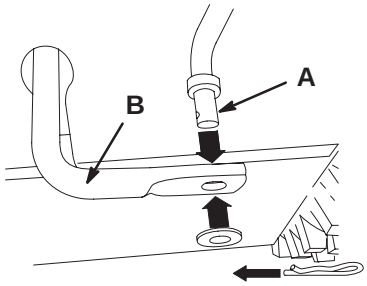

m-6899

2. Secure the lower end of the speed control rod with the washer and hairpin cotter that you previously removed.

3. Remove the hairpin cotter and the outer washer (of 3 washers) from the trunnion (A) on the upper end of the speed control rod.

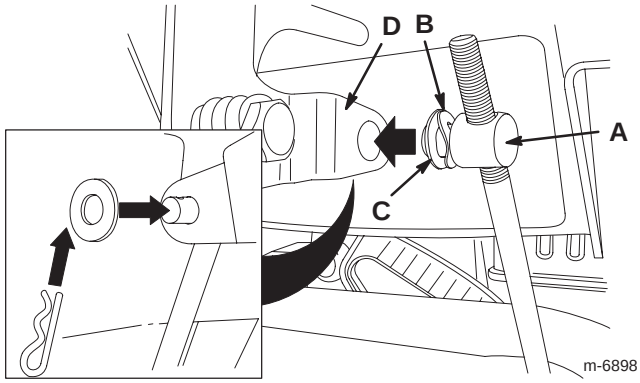

m-6898

Note: To make installation easier, leave the wave washer (B) and the flat washer (C) on the trunnion.

4. Shift the speed selector lever into Position R2.

5. Rotate the lower link arm fully upward (counterclockwise).

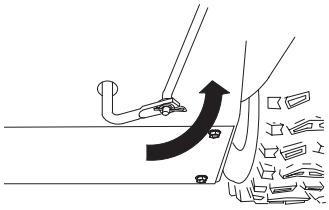

m-6971

6. Lift up on the speed control rod and insert the trunnion into the hole in the underside of the speed selector lever (D) located under the control panel.

Note: If the trunnion does not fit into the hole when you lift up on the speed control rod, rotate the trunnion upward or downward on the speed control rod until it fits into the hole.

7. Secure the trunnion and upper end of the speed control rod with the outer washer and a hairpin cotter you previously removed.

Note: To make the installation easier, you can look down through the opening in the speed selector (A).

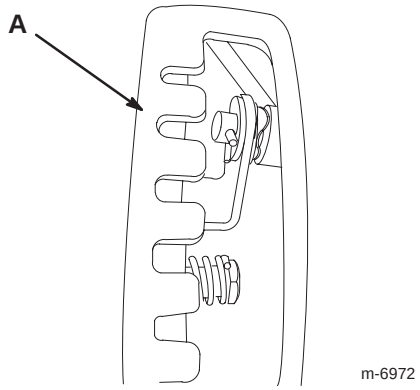

Installing the Chute Control Rod

1. Remove the packaging materials from the Quick Stick.

2. From the operating position, rotate the Quick Stick so that it is upright and in the center.

3. Press and hold the blue trigger cap down and pull the lever fully rearward.

Note: The discharge chute and deflector should face forward. If they do not, press and hold the blue trigger cap down (but do not move the Quick Stick), and reach forward and rotate the discharge chute until it faces directly forward.

4. Align the flattened back end of the long chute control rod (A) with the flattened front end of the short rod (B) that extends from the front of the control panel so that they nest together.

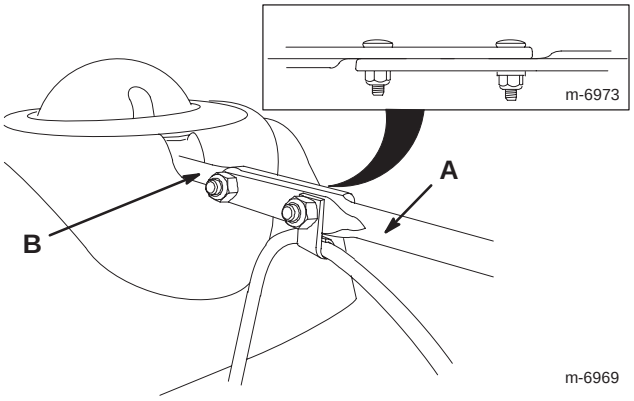

5. Hold the long chute control rod in this orientation (you must move it back to insert it into the gear) and insert the front end of the rod into the opening in the back of the chute gear cover until it slides into the chute gear.

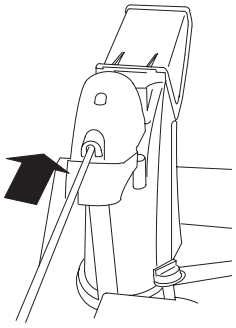

6. Align the holes in the nested ends of the rods and insert 2 carriage bolts through the short rod from the left side of the snowthrower (as viewed from the operating position).

7. The 2 carriage bolts (in the loose parts bag) will go through the holes in the short rod and then through the holes in the long chute control rod.

8. Insert the cable clip (A) that supports the deflector cable (B) onto the forward carriage bolt, and secure the carriage bolts with locknuts from the loose parts bag.

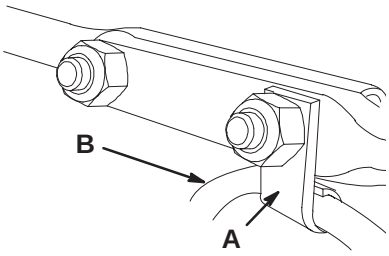

9. Press and hold the blue trigger cap down to unlock the Quick Stick.

10. Rotate the Quick Stick in a circle to ensure that the chute and deflector operate smoothly.

Connecting the Wire to the Headlight

1. Insert the wire connector on the loose end of the wire straight into the back of the headlight until it is securely in place.

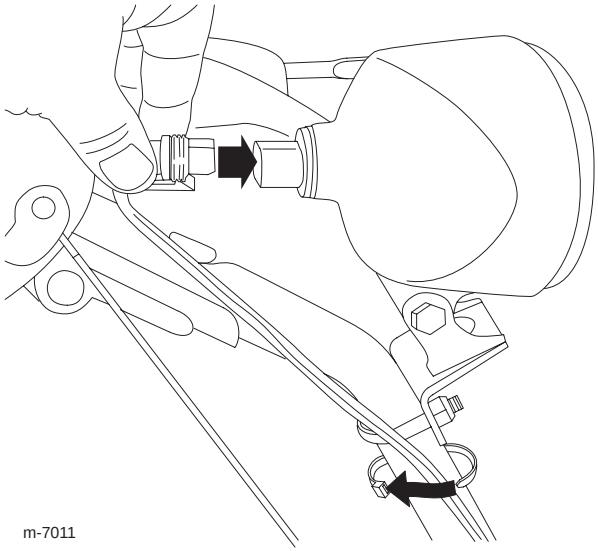

m-7011

Note: Ensure that the plastic clip on the wire connector is on the bottom.

2. Secure a cable tie (from the loose parts bag) around the wire and the handle about an inch (2.5 cm) below the U-bolt.

Filling the Engine with Oil

Your snowthrower comes with only a few ounces of oil in the engine. **Before starting the engine, add oil.**

Note: The bottle that comes with the snowthrower contains 25 oz. of oil.

Max. fill: 26 oz. (0.77 l), type: automotive detergent oil with an API service classification of SF, SG, SH, SJ, SL, or higher.

- For temperatures above 32°F (0°C), use SAE 30W.
- For temperatures between 0°F and 32°F (–18°C to 0°C), use SAE 5W30 or SAE 10W.
- For air temperatures below 0°F (–18°C), use SAE 0W30.

1. Remove the dipstick.

2. **Slowly** pour oil into the oil fill tube to raise the oil level to the Full mark on the dipstick. **Do not overfill.**

3. Install the dipstick securely.

Note: Do not spill oil around the oil fill tube; oil could leak onto traction parts and cause the traction to slip.

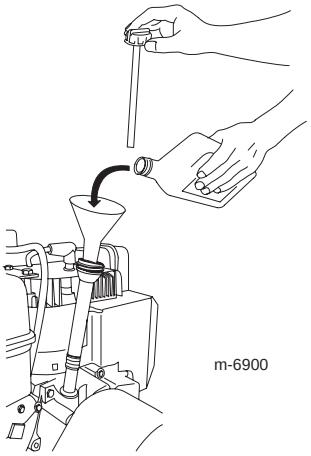

m-6900

Checking the Tire Pressure

The tires are overinflated at the factory for shipping. Reduce the pressure equally in both tires to between 17 and 20 psi (116 and 137 kPa).

Checking the Skids

Refer to Checking and Adjusting the Skids on page 16.

Before Operating

Filling the Fuel Tank

Danger

Gasoline is extremely flammable and explosive. A fire or explosion from gasoline can burn you and others.

- **To prevent a static charge from igniting the gasoline, place the container and/or snowthrower on the ground before filling, not in a vehicle or on an object.**
- **Fill the tank outdoors when the engine is cold. Wipe up spills.**
- **Do not handle gasoline when smoking or around an open flame or sparks.**
- **Store gasoline in an approved fuel container, out of the reach of children.**

Fill the fuel tank with fresh unleaded regular gasoline from a major name-brand service station.

Important: To reduce starting problems, add fuel stabilizer to the fuel all season, mixing it with gasoline less than 30 days old. **Do not add oil to the gasoline.**

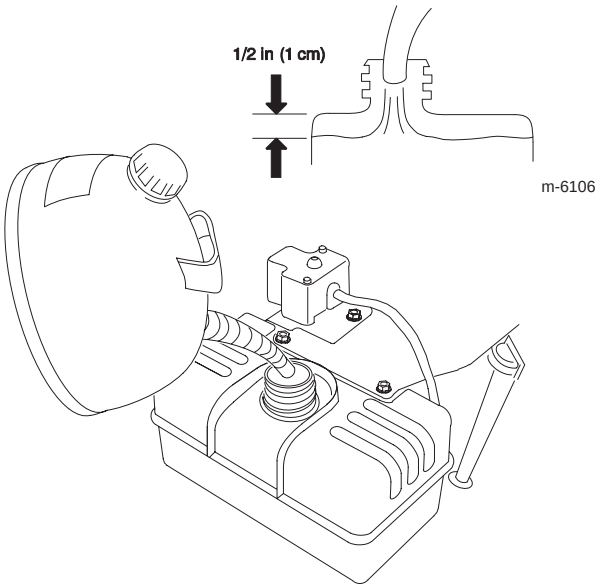

Operation

Note: Determine the left and right sides of the machine from the normal operating position.

Starting the Engine

1. Connect the spark plug wire.

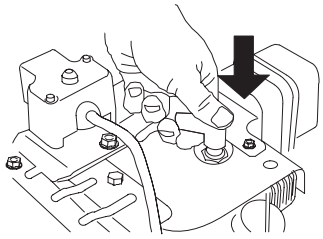

2. Move the throttle to the Fast position.

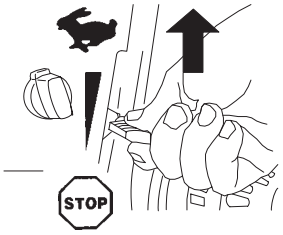

3. Rotate the fuel shutoff valve counterclockwise to open it.

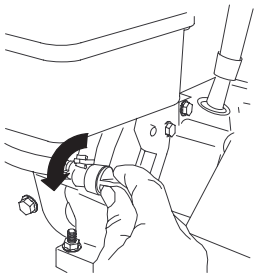

4. Rotate the choke to the On position.

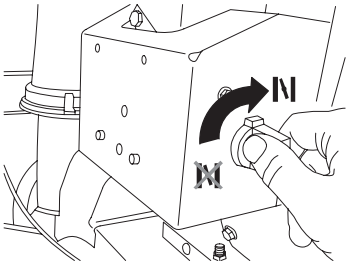

5. Insert the ignition key.

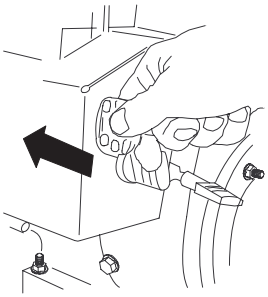

6. Firmly push in the primer 3 times with your thumb, holding the primer in for a second before releasing it each time.

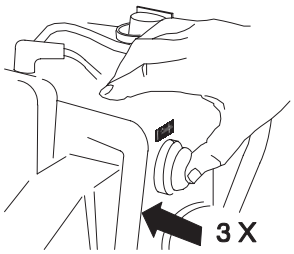

Note: Take your glove off when you push in the primer so that air cannot escape from the primer hole.

Note: Priming excessively may flood the engine and prevent it from starting.

7. Start the snowthrower using the recoil starter or the electric starter.

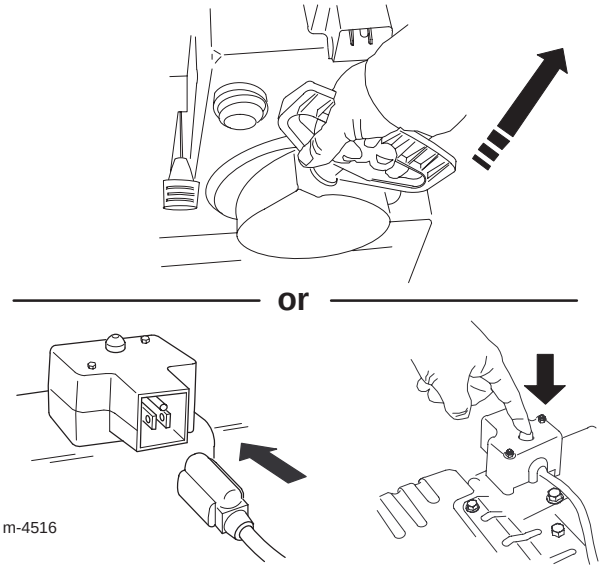

Important: To prevent damaging the electric starter, run it no more than 10 times at intervals of 5 seconds on, then 5 seconds off. If the engine does not start after this series of attempts, allow the starter to cool for at least 40 minutes before trying to start it again. If the engine still does not start, take the snowthrower to an Authorized Service Dealer for service.

8. Disconnect the cord from the electric starter and the outlet (electric-start only).

9. When the engine starts, set the choke to the 3/4 position. As the engine warms up, set the choke to the 1/2 position. When the engine is warm, set the choke to the Off position.

Caution

If you leave the snowthrower plugged into a power outlet, someone can inadvertently start the snowthrower and injure people or damage property.

Unplug the power cord whenever you are not starting the snowthrower.

Stopping the Engine

1. Move the throttle to the Stop position.

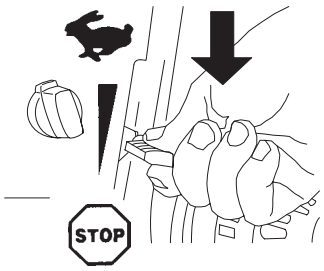

2. Wait for all moving parts to stop before leaving the operating position.

3. Close the fuel shutoff valve by rotating it clockwise.

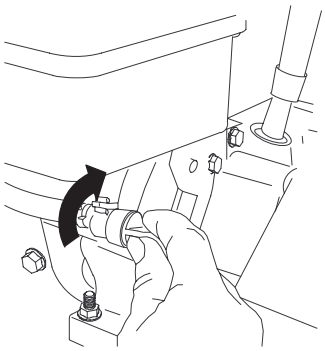

4. Pull the recoil starter 3 or 4 times. This helps prevent the recoil starter from freezing up.

Operating the Traction Drive

Note: To operate the traction drive, you must operate the snowthrower with both wheel clutch levers in the released position. Refer to Using the Wheel Clutch Levers on page 12.

1. To engage the traction drive, squeeze the left hand (traction) lever to the handgrip.

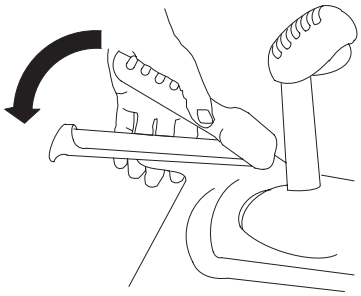

2. To stop the traction drive, release the traction lever.

3. Check to ensure that the speed selector operates properly:

- If the snowthrower does not move or moves forward when it is in Position R1, remove the trunnion from the speed selector lever, turn the trunnion downward (clockwise) on the speed control rod, then install the trunnion.
- If the snowthrower does not move or moves rearward when it is in Position 1 (forward), remove the trunnion from the speed selector lever, turn the trunnion upward (counterclockwise) on the speed control rod, then install the trunnion.

Note: Refer to the relevant steps in Installing the Traction Control Linkage on page 7.

Note: If the snowthrower moves when the traction lever is in the released position, check the traction cable (refer to Checking and Adjusting the Traction Cable on page 17) or take the snowthrower to an Authorized Service Dealer for service.

Using the Wheel Clutch Levers

The wheel clutch levers allow you to momentarily disengage the drive to one or both wheels with the traction drive lever still engaged. This enables you to turn and maneuver the snowthrower easily.

Holding down the traction lever against the handle engages the traction drive to both wheels.

To turn the snowthrower to the right, lift up on the right wheel clutch lever and squeeze it toward the handle.

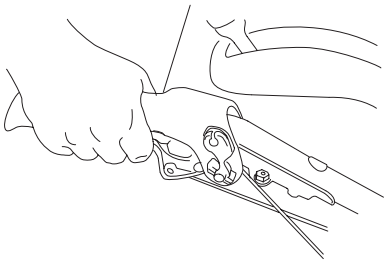

Note: This disengages the drive to the right wheel while the left wheel continues driving, and the snowthrower turns to the right.

Note: Similarly, squeezing the left wheel clutch lever turns the snowthrower to the left.

When you complete the turn, release the wheel clutch lever, and the drive re-engages both wheels.

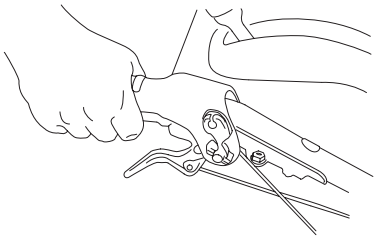

Momentarily squeezing and releasing the left or right wheel clutch lever also allows for steering adjustments to keep the snowthrower going in a straight line, especially in deep snow.

Squeezing both wheel clutch levers simultaneously disengages the drive to both wheels. This enables you to manually move the snowthrower backward without stopping to shift it into a reverse gear. It also allows you to maneuver and transport the snowthrower more easily when the engine is not running.

Operating the Speed Selector

The speed selector has 6 forward and 2 reverse gears. To change speeds, release the traction lever and shift the speed selector lever to the desired position. The lever locks in a notch at each speed selection.

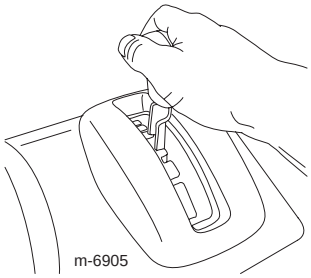

Operating the Auger/ Impeller Drive

1. To engage the auger/ impeller drive, squeeze the right hand (auger/ impeller) lever to the handgrip.

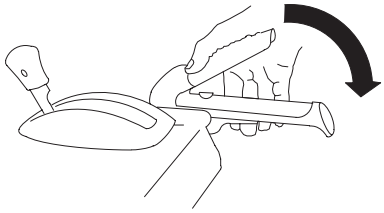

2. To stop the auger and impeller, release the right hand lever.

Important: When you engage both the auger/impeller lever and the traction lever, the traction lever locks the auger/impeller lever down, freeing your right hand. To release both levers, simply release the left hand (traction) lever.

3. If the auger and impeller continue to rotate when you release the auger/impeller lever, do not operate the snowthrower. Check the auger/impeller cable (refer to Checking and Adjusting the Auger/Impeller Cable on page 17) and adjust it if necessary. Otherwise, take the snowthrower to an Authorized Dealer for service.

Warning

If the auger and impeller continue to rotate when you release the auger/impeller lever, you could seriously injure yourself or others.

Do not operate the snowthrower. Take it to an Authorized Service Dealer for service.

Operating the Quick Stick™

Push and hold the blue trigger cap down to use the Quick Stick to move the discharge chute and the chute deflector. Release the trigger cap to lock the discharge chute and chute deflector into position.

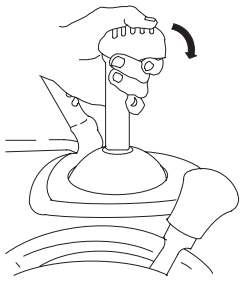

Moving the Discharge Chute

Push and hold the blue trigger cap down and move the Quick Stick to the left to move the discharge chute to the left; move the Quick Stick to the right to move the discharge chute to the right.

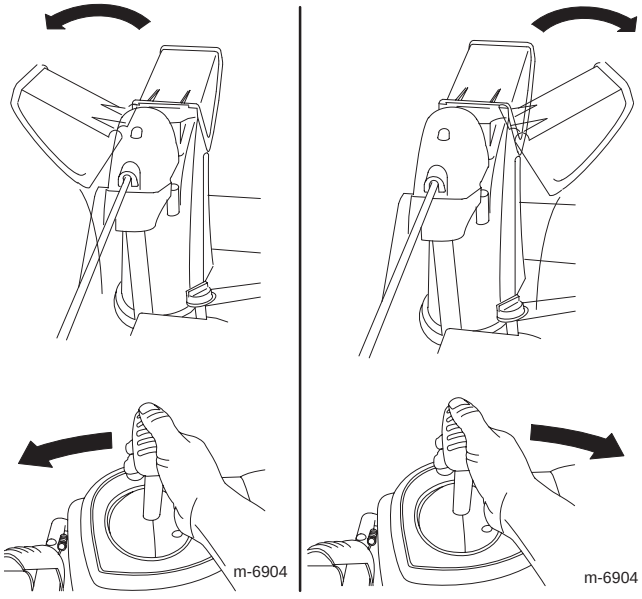

Moving the Chute Deflector

Push and hold the blue trigger cap down and move the Quick Stick forward to lower the chute deflector; move it rearward to raise the chute deflector.

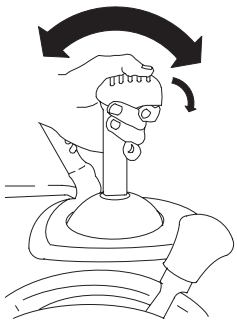

Throwing Snow

Danger

When the snowthrower is in operation, the impeller and auger can rotate and cut off or injure hands and feet.

- **Before adjusting, cleaning, inspecting, troubleshooting, or repairing the snowthrower, *stop the engine and wait for all moving parts to stop.* Disconnect the wire from the spark plug and keep it away from the plug to prevent someone from accidentally starting the engine.**
- **Remove an obstruction from the discharge chute; refer to Unclogging the Discharge Chute on page 14. If necessary, use a stick, *not your hands*, to remove an obstruction from the discharge chute.**
- **Stay behind the handles and away from the discharge opening while operating the snowthrower.**
- **Keep face, hands, feet, and any other part of your body or clothing away from concealed, moving, or rotating parts.**

Warning

The rotor blades can throw stones, toys, and other foreign objects and cause serious personal injury to the operator or to bystanders.

- **Keep the area to be cleared free of all objects that the rotor blades could pick up and throw.**
- **Keep all children and pets away from the area of operation.**

Operating Tips

- Always set the throttle to the Fast position when throwing snow.
- If the engine slows down under a load or the wheels slip, shift the snowthrower into a lower gear.
- If the front of the snowthrower rides up, shift the snowthrower into a lower gear. If the front continues to ride up, lift up on the handles.
- The pivoting scraper on the snowthrower is not recommended for use on gravel surfaces. But if you must use the snowthrower on a gravel surface, adjust the skids further down to prevent the pivoting scraper from picking up rocks.

Unclogging the Discharge Chute

If the auger/impeller is running but there is no snow coming out of the discharge chute, the discharge chute may be clogged.

- To unclog the discharge chute, stay in the operating position and release the left hand (traction) lever. While running the auger/impeller, push down on the handles to raise the front of the snowthrower a few inches (centimeters) off the pavement. Then lift the handles quickly to bump the front of the snowthrower on the pavement. Repeat if necessary until a stream of snow comes out the discharge chute.
- If you cannot unclog the discharge chute by bumping the front of the snowthrower, **stop the engine, wait for all moving parts to stop, and use a stick; never use your hand.**

  Important: Unclogging the discharge chute by bumping the front of the snowthrower on the pavement may cause the skids to move. Adjust the skids and tighten the skid bolts securely.

Preventing Freeze-up

- In snowy and cold conditions, some controls and moving parts may freeze. **Do not use excessive force when trying to operate frozen controls.** If you have difficulty operating any control or part, start the engine and let it run for a few minutes.
- After using the snowthrower, let the engine run for a few minutes to prevent moving parts from freezing. Engage the auger/impeller to clear any remaining snow from inside the housing. Rotate the Quick Stick to prevent it from freezing. Stop the engine, wait for all moving parts to stop, and remove all ice and snow from the snowthrower.
- With the engine off, pull the recoil starter handle several times to prevent the recoil starter from freezing up.

Maintenance

Note: Determine the left and right sides of the machine from the normal operating position.

Recommended Maintenance Schedule

Maintenance Service Interval	Maintenance Procedure
Each Use	• Check the engine oil level and add oil if necessary. Refer to Checking the Engine Oil Level on page 16.
After the First 2 Operating Hours	• Change the engine oil. Refer to Changing the Engine Oil on page 18. • Inspect the traction cable and adjust it if necessary. Refer to Checking and Adjusting the Traction Cable on page 17. • Inspect the auger/impeller cable and adjust it if necessary. Refer to Checking and Adjusting the Auger/Impeller Cable on page 17.
Annually	• Change the engine oil. Refer to Changing the Engine Oil on page 18. • Check the skids and adjust them if necessary. Refer to Checking and Adjusting the Skids on page 16. • Inspect the traction cable and adjust or replace it if necessary. Refer to Checking and Adjusting the Traction Cable on page 17. • Inspect the auger/impeller cable and adjust or replace it if necessary. Refer to Checking and Adjusting the Auger/Impeller Cable on page 17. • Inspect the spark plug. Replace and/or gap it if necessary. Refer to Inspecting and Replacing the Spark Plug on page 19. • Check the auger gearbox oil and add oil if necessary. Refer to Checking the Auger Gearbox Oil Level on page 18. • Check the tire pressure and inflate them to the proper pressure. Refer to Checking the Tire Pressure on page 9. • Lubricate the hex shaft. Refer to Lubricating the Hex Shaft on page 18. • Drain the gasoline and run the engine to dry out the fuel tank and the carburetor at the end of the snowthrowing season. Refer to Preparing the Snowthrower for Storage on page 20. • Have an Authorized Service Dealer inspect and replace the traction drive belt and/or the auger/impeller drive belt if necessary.

Important: You can find more information about maintaining and servicing your snowthrower at www.Toro.com.

Important: Refer to your engine operator's manual for additional maintenance procedures. For engine adjustments, repairs, or warranty service not covered in this manual, contact an Authorized Tecumseh Servicing Dealer.

Preparing for Maintenance

1. Move the snowthrower to a level surface.

2. Stop the engine and wait for all moving parts to stop.

3. Disconnect the spark plug wire.

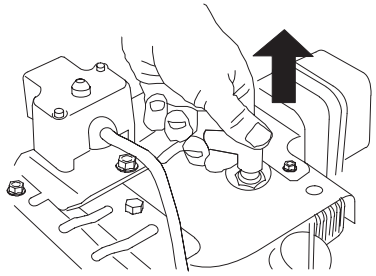

Checking the Engine Oil Level

Each time before using the snowthrower, check the oil level in the engine crankcase.

1. Remove the dipstick, wipe it clean, then fully install the dipstick.

2. Remove the dipstick and check the oil level. If the oil level is below the Add mark on the dipstick, add oil. Refer to Filling the Engine with Oil on page 9.

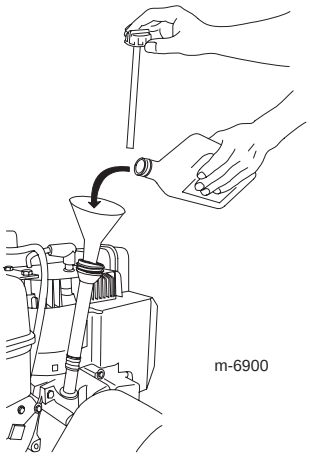

m-6900

Checking and Adjusting the Skids

Check the skids to ensure that the auger does not contact the paved surface. Adjust the skids as needed to compensate for wear.

1. Check the air pressure in the tires. Refer to Checking the Tire Pressure on page 9.

2. Move the snowthrower onto a level surface.

3. Loosen the nuts that secure both skids (A) to the auger sides until the skids slide up and down easily.

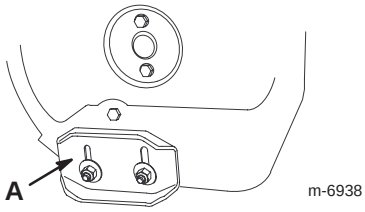

m-6938

4. Push down on the handles to allow the pivoting scraper (A) to move fully forward, then set the front of the snowthrower down so that the front edge of the pivoting scraper contacts the ground.

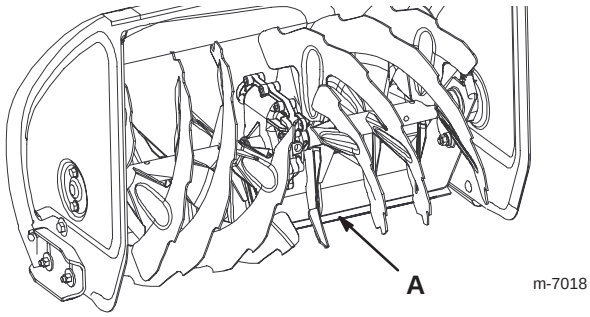

m-7018

5. Move the skids down until they are even with the ground.

Note: For a smooth surface, you can set the skids slightly higher to increase the scraping action, but set the skids far enough down to prevent the auger blades from contacting the ground.

Note: The pivoting scraper on the snowthrower is not recommended for use on gravel surfaces. But if you must use the snowthrower on a gravel surface, adjust the skids further down to prevent the pivoting scraper from picking up rocks.

6. Firmly tighten the nuts that secure both skids to the auger sides.

Note: If the skids become excessively worn, you can turn them over and set the unused side toward the pavement.

Checking and Adjusting the Traction Cable

Check and adjust the traction cable after the first 2 operating hours, then annually thereafter. If the snowthrower does not drive in the forward or reverse speeds or it drives when you release the traction lever, adjust the traction cable.

With the traction lever disengaged, check the pin (A) in the elongated slot in the left side of the snowthrower above the tire (B). There should be a gap of 1/32 to 1/16 inch (1 to 1.5 mm) from the front of the slot to the front edge of the pin.

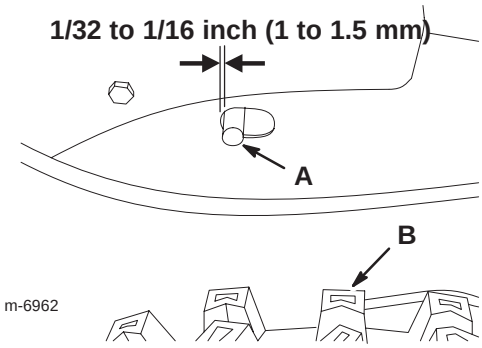

If the left hand (traction) cable is not properly adjusted, do the following steps:

1. Loosen the jam nut (A).

2. Loosen or tighten the turnbuckle (B) to adjust the pin until it is the proper gap from the front edge of the slot.

3. Tighten the jam nut.

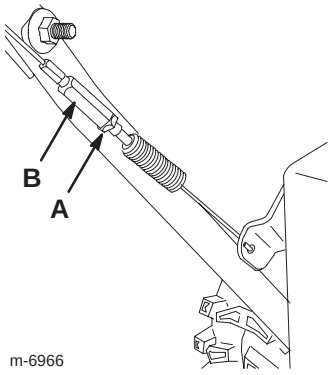

Checking and Adjusting the Auger/Impeller Cable

Check and adjust the auger/impeller cable after the first 2 operating hours, then annually thereafter.

1. Remove the 2 screws from the right side of the belt cover as shown.

2. Lift up the right side of the belt cover.

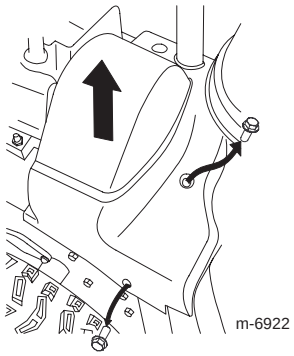

3. With the auger/impeller lever disengaged, ensure that the gap between the auger clutch assembly and the tab (A) is 1/16 inch (1.5 mm).

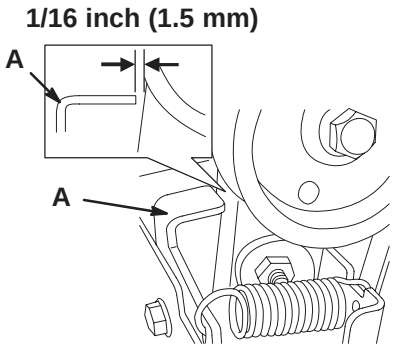

4. If the auger/impeller cable is not properly adjusted, do the following steps:

5. Loosen the jam nut (A).

6. Loosen or tighten the turnbuckle (B) that adjusts the tension on the cable.

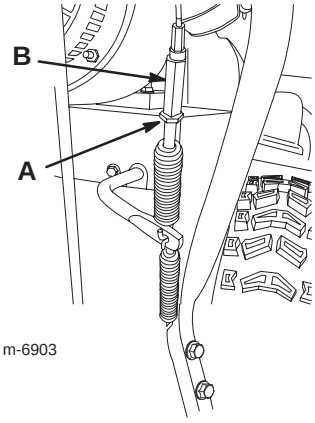

7. Adjust the turnbuckle until you obtain the proper gap.

8. Tighten the jam nut.

9. Insert the 2 screws you previously removed on the belt cover.

10. If the auger/impeller cable is properly adjusted but a problem remains, contact an Authorized Service Dealer.

Checking the Auger Gearbox Oil Level

Check the auger gearbox oil annually, and add oil if necessary.

1. Move the snowthrower to a level surface.

2. Clean the area around the pipe plug.

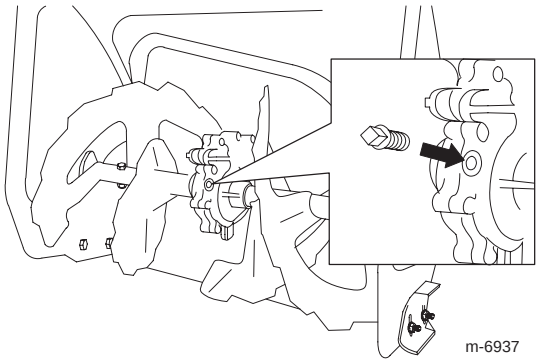

3. Remove the pipe plug from the gearbox.

4. Check the level of oil in the gearbox. The oil should be at the point of overflowing at the filler opening.

5. If the level of oil is low, add GL-5 or GL-6, SAE 85–95 EP transmission oil to the gearbox until the point of overflow.

Note: Do not use synthetic oil.

6. Install the pipe plug in the gearbox.

Changing the Engine Oil

Change the engine oil after the first 2 operating hours, then annually thereafter. If possible, run the engine just before changing the oil because warm oil flows better and carries more contaminants.

Max. fill: 26 oz. (0.77 l), type: automotive detergent oil with an API service classification of SF, SG, SH, SJ, SL, or higher.

- For temperatures above 32°F (0°C), use SAE 30W.
- For temperatures between 0°F and 32°F (–18°C to 0°C), use SAE 5W30 or SAE 10W.
- For air temperatures below 0°F (–18°C), use SAE 0W30.

1. Clean the area around the oil drain cap (A).

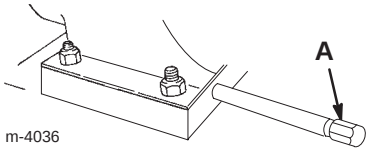

2. Slide an oil drain pan under the drain extension and remove the oil drain cap.

3. Drain the oil.

Note: Dispose of the used oil properly at a local recycling center.

4. Install the oil drain cap.

5. Fill the crankcase with oil. Refer to Filling the Engine Crankcase with Oil on page 9.

Lubricating the Hex Shaft

Lightly lubricate the hex shaft (A) annually with automotive engine oil.

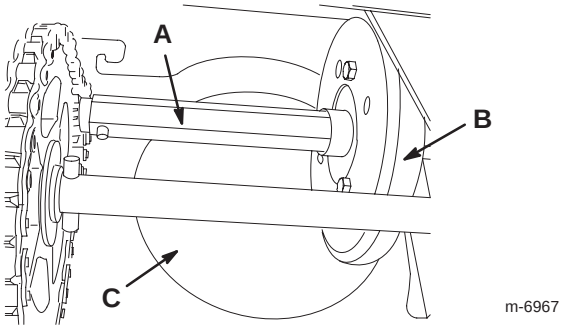

Important: Do not get oil on the rubber wheel (B) or the aluminum friction drive plate (C) because the traction drive will slip.

1. Drain the gasoline from the fuel tank.

2. Tip the snowthrower forward onto its auger housing and block it so that it cannot fall.

3. Remove the back cover.

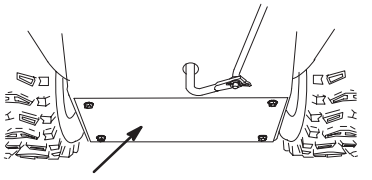

4. Move the speed selector lever to Position R2.

5. Dip your finger in automotive engine oil and **lightly** lubricate hex shaft (A).

6. Move the speed selector lever to Position 6.

7. Lubricate the other end of the hex shaft.

8. Move the speed selector lever forward and rearward a few times.

9. Install the back cover and return the snowthrower to the operating position.

Inspecting and Replacing the Spark Plug

Use a **Champion RJ-19LM** or equivalent spark plug. Check and gap the spark annually, and replace the plug if necessary.

1. Clean around the base of the spark plug.

2. Remove the spark plug.

3. Examine the spark plug and replace it if it is cracked, fouled, dirty, or if the electrodes are worn.

Important: Do not clean the electrodes because grit could enter the cylinder and damage the engine.

4. Set the gap between the electrodes on the spark plug at 0.030 inch (0.76 mm).

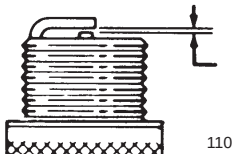

5. Install the spark plug by hand and then torque it to 15 ft-lb (20.4 N·m).

Note: If you do not have a torque wrench, tighten the plug firmly.

Replacing the Drive Belts

If the auger/impeller drive belt or the traction drive belt becomes worn, oil-soaked, or otherwise damaged, go to www.Toro.com for additional service information or have an Authorized Service Dealer replace the belt.

Replacing the Headlight Bulb

Use a **GE 892 16W halogen light bulb.** Do not touch the bulb with your hands or allow dirt or moisture to come into contact with the bulb.

1. Remove the wire connector from the back of the headlight.

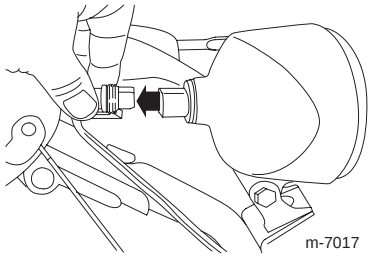

2. Turn the base of the bulb counterclockwise until it stops.

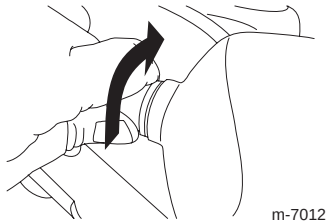

3. Remove the bulb straight out from the back of the headlight.

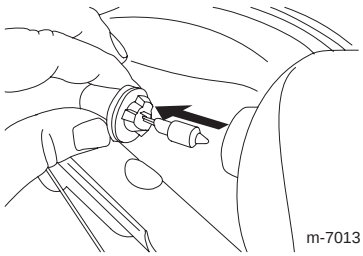

4. Insert a new bulb into the back of the headlight.

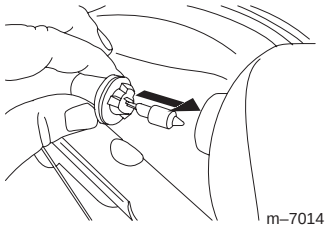

5. Turn the base of the bulb clockwise until it is snug.

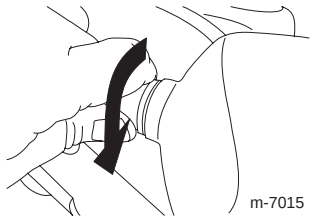

6. Insert the wire connector straight into the back of the headlight until it is securely in place.

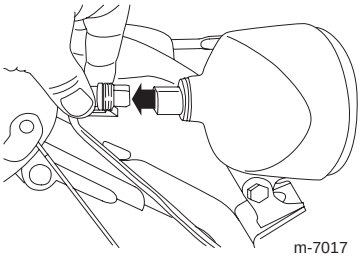

Storage

Warning

Gasoline vapors can explode.

- **Do not store gasoline more than 30 days.**
- **Do not store the snowthrower in an enclosure near an open flame.**
- **Allow the engine to cool before storing it.**

Preparing the Snowthrower for Storage

1. On the last refueling of the year, add fuel stabilizer to fresh fuel as directed by the engine manufacturer.

2. Run the engine for 10 minutes to distribute the conditioned fuel through the fuel system.

3. Loosen the hose clamp that secures the fuel line to the valve and slide the fuel line off the fuel shutoff valve.

4. Open the fuel shutoff valve and allow the fuel to drain out of the fuel tank into an approved fuel container.

5. Install the fuel line onto the fuel shutoff valve and secure it with a hose clamp.

6. Run the snowthrower until the engine stops from running out of fuel.

7. Prime the engine and start it again.

8. Allow the engine to run until it stops. When you can no longer start the engine, it is sufficiently dry.

9. Stop the engine and allow it to cool.

10. Remove the ignition key.

11. Disconnect the spark plug wire.

12. Remove the spark plug, add 1 oz. (30 ml) of oil through the spark plug hole, and pull the starter rope **slowly** several times to distribute oil throughout the cylinder to prevent cylinder corrosion during the off-season.

13. Loosely install the spark plug.

14. Dispose of any unused fuel properly. Recycle it according to local codes, or use it in your automobile.

Note: Do not store stabilized fuel for more than 90 days.

15. Clean the snowthrower thoroughly.

16. Tighten all loose screws, bolts, and locknuts. Repair or replace any damaged parts.

Removing the Snowthrower from Storage

1. Remove the spark plug and spin the engine rapidly using the starter to blow the excess oil from the cylinder.

2. Install the spark plug by hand and then torque it to 15 ft-lb (20.4 N·m).

3. Connect the spark plug wire.

4. Perform the annual maintenance procedures as given in the Recommended Maintenance Schedule on page 15.

Troubleshooting

Toro designed and built your snowthrower for trouble-free operation. Check the following components and items carefully, and refer to Maintenance on page 15 for more information. If a problem continues, see an Authorized Service Dealer.

Problem	Possible Causes	Corrective Action
Electric starter does not turn (electric-start models only)	1. The power cord is disconnected at the outlet or the snowthrower.	1. Connect the power cord to the outlet and/or the snowthrower.
	2. The power cord is worn, corroded, or damaged.	2. Replace the power cord.
	3. The power outlet is not energized.	3. Have a qualified electrician energize the power outlet.
Engine does not start or starts hard	1. The key is not in the ignition or is in the Stop position.	1. Insert the key into the ignition and turn it to the On position.
	2. The choke is in the Off position and the primer has not been pressed.	2. Move the choke to the On position and press the primer 3 times.
	3. The fuel shutoff valve is not open.	3. Open the fuel shutoff valve.
	4. The throttle is not in the Fast position.	4. Move the throttle to the Fast position.
	5. The fuel tank is empty or the fuel system contains stale fuel.	5. Drain and/or fill the fuel tank with fresh gasoline (not more than 30 days old). If the problem persists, contact your Authorized Service Dealer.
	6. The spark plug wire is loose or disconnected.	6. Connect the wire to the spark plug.
	7. The spark plug is pitted, fouled, or the gap is incorrect.	7. Check the spark plug and adjust the gap if necessary. Replace the spark plug if it is pitted, fouled, or cracked.
	8. The fuel cap vent is restricted.	8. Remove the vent restriction or replace the fuel cap.
	9. The engine oil level in the engine crankcase is too low or too high.	9. Add or drain oil to adjust the oil level in engine crankcase to the Full mark on the dipstick.
Engine runs rough	1. The choke is in the On position.	1. Move the choke to the Off position.
	2. The fuel shutoff valve is not completely open.	2. Open the fuel shutoff valve.
	3. The fuel tank is nearly empty or contains stale fuel.	3. Drain and fill the fuel tank with fresh gasoline (not more than 30 days old). If the problem persists, contact an Authorized Service Dealer.
	4. The spark plug wire is loose.	4. Connect the wire to the spark plug.

Problem	Possible Causes	Corrective Action
	5. The spark plug is pitted, fouled, or the gap is incorrect.	5. Check the spark plug and adjust the gap if necessary. Replace the spark plug if it is pitted, fouled, or cracked.
	6. The engine oil level in the engine crankcase is too low or too high.	6. Add or drain the oil level in the engine crankcase to the Full mark on the dipstick.
Engine runs, but the snowthrower discharges snow poorly or not at all	1. The throttle is not in the Fast position when throwing snow.	1. Move the throttle to the Fast position.
	2. The snowthrower is moving too fast to clear the snow.	2. Shift the snowthrower into a lower gear.
	3. You are trying to remove too much snow per swath.	3. Reduce the amount of snow removed for per swath.
	4. You are trying to remove extremely heavy or wet snow.	4. Don't overload the snowthrower with extremely heavy or wet snow.
	5. The discharge chute is plugged.	5. Refer to Unclogging the Discharge Chute on page 14.
	6. The auger/impeller drive belt is loose or is off the pulley.	6. Install and/or adjust the auger/impeller drive belt; refer to www.Toro.com for servicing information or take the snowthrower to an Authorized Service Dealer.
	7. The auger/impeller drive belt is worn or broken.	7. Replace the auger/impeller drive belt; refer to www.Toro.com for servicing information or take the snowthrower to an Authorized Service Dealer.
Snowthrower does not properly clear the snow off the surface	1. The skids are not properly adjusted.	1. Adjust the skids.
	2. The tire pressure is uneven.	2. Check the pressure in the tires and adjust the pressure if necessary.

Gas Powered
Snow Products

The Toro Total Coverage Guarantee

A Two-Year Full Warranty
(Limited Warranty for Commercial Use)

Conditions and Products Covered

The Toro Company and its affiliate, Toro Warranty Company, pursuant to an agreement between them, jointly promise to repair any Toro Product used for normal residential purposes* if defective in materials or workmanship.

The following time periods apply from the date of purchase:

Snow Products	Warranty Period
• All Products and Attachments	2 year full warranty
• Power Max™ Snow Products:	
Chute	5 year full warranty
Chute Deflector	5 year full warranty
Impeller Housing Cover	5 year full warranty

This warranty includes the cost of parts and labor, but you must pay transportation costs. Transportation within a fifteen mile radius of the servicing dealer is covered under this warranty for two-stage snowthrowers only.

This warranty applies to all gasoline powered snow products.

* Normal residential purposes means use of the product on the same lot as your home. Use at more than one location is considered commercial use, and the commercial use warranty would apply.

Limited Warranty for Commercial Use

Toro Consumer Products used for commercial, institutional, or rental use are warranted against defects in materials or workmanship for 45 days from the date of purchase.

Instructions for Obtaining Warranty Service

If you think that your Toro Product contains a defect in materials or workmanship, follow this procedure:

1. Contact any Toro Authorized or Master Service Dealer to arrange service at their dealership. To locate a dealer convenient to you, refer to the Yellow Pages of your telephone directory (look under “Lawn Mowers”) or access our website at www.Toro.com. U.S. Customers may also call 800-248-8676 to use our 24-hour Toro dealer locator system.
2. Bring the product and your proof of purchase (sales receipt) to the Service Dealer.

If for any reason you are dissatisfied with the Service Dealer’s analysis or with the assistance provided, contact us at:

Customer Care Department, Consumer Division
Toro Warranty Company
8111 Lyndale Avenue South
Bloomington, MN 55420-1196
866-336-5205 Toll free (U.S. customers)
866-854-9033 Toll free (Canada customers)

Owner Responsibilities

You must maintain your Toro Product by following the maintenance procedures described in the operator’s manual. Such routine maintenance, whether performed by a dealer or by you, is at your expense.

Items and Conditions Not Covered

There is no other express warranty except for special emission system coverage on some products and the Toro Starting Guarantee on GTS engines. This express warranty does not cover:

- Cost of regular maintenance service or parts, such as filters, fuel, lubricants, tune-up parts, brake and clutch adjustments
- Any product or part which has been altered, misused, or required replacement or repair due to normal wear, accidents, or lack of proper maintenance
- Repairs necessary due to improper fuel, contaminants in the fuel system, or failure to properly prepare the fuel system prior to any period of non-use over three months

All repairs covered by this warranty must be performed by an Authorized Toro Service Dealer using Toro approved replacement parts.

General Conditions

Repair by an Authorized Toro Service Dealer is your sole remedy under this warranty.

Neither The Toro Company nor Toro Warranty Company is liable for indirect, incidental or consequential damages in connection with the use of the Toro Products covered by this warranty, including any cost or expense of providing substitute equipment or service during reasonable periods of malfunction or non-use pending completion of repairs under this warranty.

Some states do not allow exclusions of incidental or consequential damages, or limitations on how long an implied warranty lasts, so the above exclusions and limitations may not apply to you.

This warranty gives you specific legal rights, and you may also have other rights which vary from state to state.

Countries Other than the United States or Canada

Customers who have purchased Toro products exported from the United States or Canada should contact their Toro Distributor (Dealer) to obtain guarantee policies for your country, province, or state. If for any reason you are dissatisfied with your Distributor’s service or have difficulty obtaining guarantee information, contact the Toro importer. If all other remedies fail, you may contact us at Toro Warranty Company.

Part No. 374-0011 Rev. B