Form No. 3479-640 Rev A

TORO®

Count on it.

Parts Catalog

11-Blade EdgeSeries™ Forward Swept DPA Cutting Unit with 7in Reel

Reelmaster® 3575 or 5010 Series Traction Unit

Model No. 03641—Serial No. 420000000 and Up

Register at www.Toro.com.
Original Instructions (EN)

CE

3479-640 A

Ordering Replacement Parts

To order replacement parts, please supply the part number, the quantity, and the description of each part desired.

Understanding Reference Numbers

Each identified part in an illustration has a reference number. The reference number for a part also appears in the parts list, along with other information about the part.

This catalog uses two special reference number formats, one to indicate parts in a service assembly and another to indicate the quantity of a given part in an illustration.

Service Assembly Reference Numbers

Parts in service assemblies have reference numbers in the form a:b. The a represents the reference number of the entire service assembly and the b represents a sequential number unique to each part within the service assembly.

For example, a wheel assembly might be identified by reference number 6, the tire by 6:1, the valve by 6:2, and the wheel by 6:3. When you order the assembly identified by reference number 6, you receive all parts identified by reference numbers 6:1,6:2, and 6:3. However, you may also order any part individually. Reference numbers of this type appear in illustration and in parts lists.

Reference Numbers Indicating Quantity

In an illustration, if a reference number indicates more than one part, the reference number has the form nX y. The n represents the quantity of the part, the X is the multiplication symbol, and the y represents the reference number.

For example, in an illustration, the reference number 2X 37 means that two of the parts identified by reference number 37 are indicated.

Contents

Frame Assembly 4
Reel and Bedbar Assembly 6
7in EdgeSeries+ 22in Fairway, 11 Blade Forward Swept Reel Assembly No. 137-8447 8
Optional Heavy-Duty MVP Kit No. 120-7230 9
Roller Assembly 10
3 Inch Diameter Long Roller Assembly No. 137-6113 11
Optional 3 Inch Diameter Short Roller Assembly No. 137-6117 12
Plastic Wiehle Roller Assembly No. 114-5400 13
Optional Plastic Shoulder Roller Assembly No. 114-5421 14
Optional Full Front Roller Assembly No. 137-6111 15
Optional High Height-of-Cut Assembly No. 137-0890 16
Shield Assembly 17
Optional Tool Assembly 18
Attachments and Accessories 19

© 2026—The Toro® Company
8111 Lyndale Avenue South
Bloomington, MN 55420

Contact us at www.Toro.com.
Printed in the USA.
All Rights Reserved

Frame Assembly

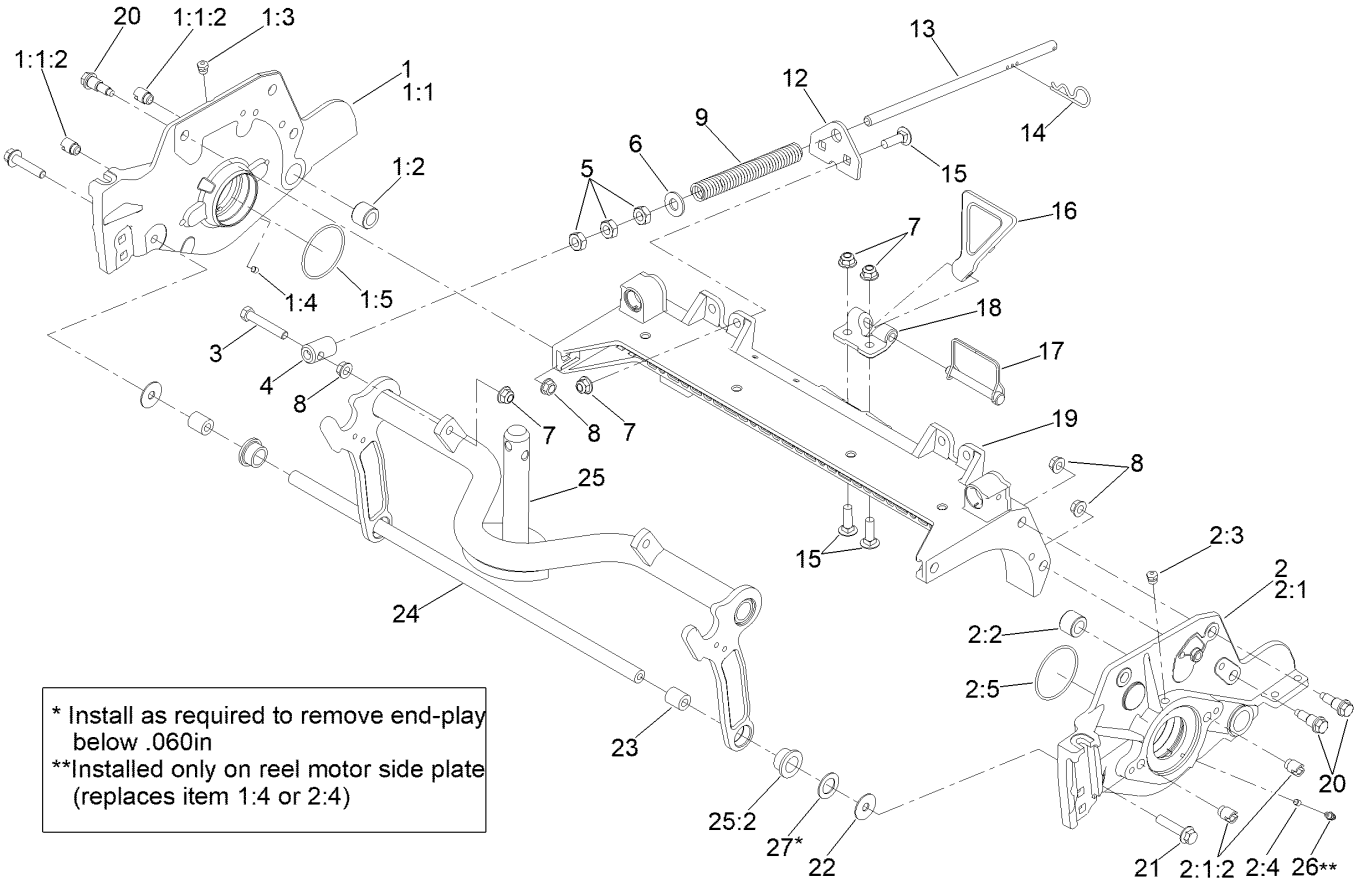

* Install as required to remove end-play below .060in
**Installed only on reel motor side plate (replaces item 1:4 or 2:4)

Frame Assembly (continued)

Ref.	Part Number	Qty.	Description
1	137-5967	1	7In RH LD Side Plate ASM
1:1		1	Side Plate-7In, RH ■
1:1:2	127-7149	2	Insert-Threaded, Side Plate
1:2	106-9618	1	Bushing-Rubber
1:3	302-39	1	Fitting-Plug
1:4	3245-35	1	Screw-Set, HSH
1:5	117-8177	1	O-Ring
2	137-5963	1	7In LH LD Side Plate ASM
2:1		1	Side Plate-7In, LH ■
2:1:2	127-7149	2	Insert-Threaded, Side Plate
2:2	106-9618	1	Bushing-Rubber
2:3	302-39	1	Fitting-Plug
2:4	3245-35	1	Screw-Set, HSH
2:5	117-8177	1	O-Ring
3	104-3396	1	Screw-HH
4	99-8662	1	Tube-Spring
5	3218-5	3	Nut-Jam
6	87-7270	1	Washer-Thrust
7	119-4042	5	Nut-HF, NI
8	3290-357	7	Nut-HSF
9	110-4079	1	Spring-Compression
12	110-4069	1	Bracket
13	115-2007	1	Rod-Spring
14	92-2762	1	Pin-Hair
15	3231-25	4	Bolt-CARR
16	119-8010-03	1	Kickstand ●
17	107-7400	1	Pin-Lynch
18	110-4058	1	Bracket-Chain
19	107-3258	1	Frame
20	107-2979	6	Bolt-Shoulder
21	3234-19	2	Screw-HHF
22	130-8094	2	Washer-Plain
23	108-4279	2	Spacer-Frame
24	108-4284-0P	1	Tube-Support
25	107-7433	1	Carrier Frame ASM
25:2	93-2877	2	Bushing
26	302-5	1	Fitting-Grease
27	67-9410	1	Washer

● Optional Equipment

■ Not serviced separately

Reel and Bedbar Assembly

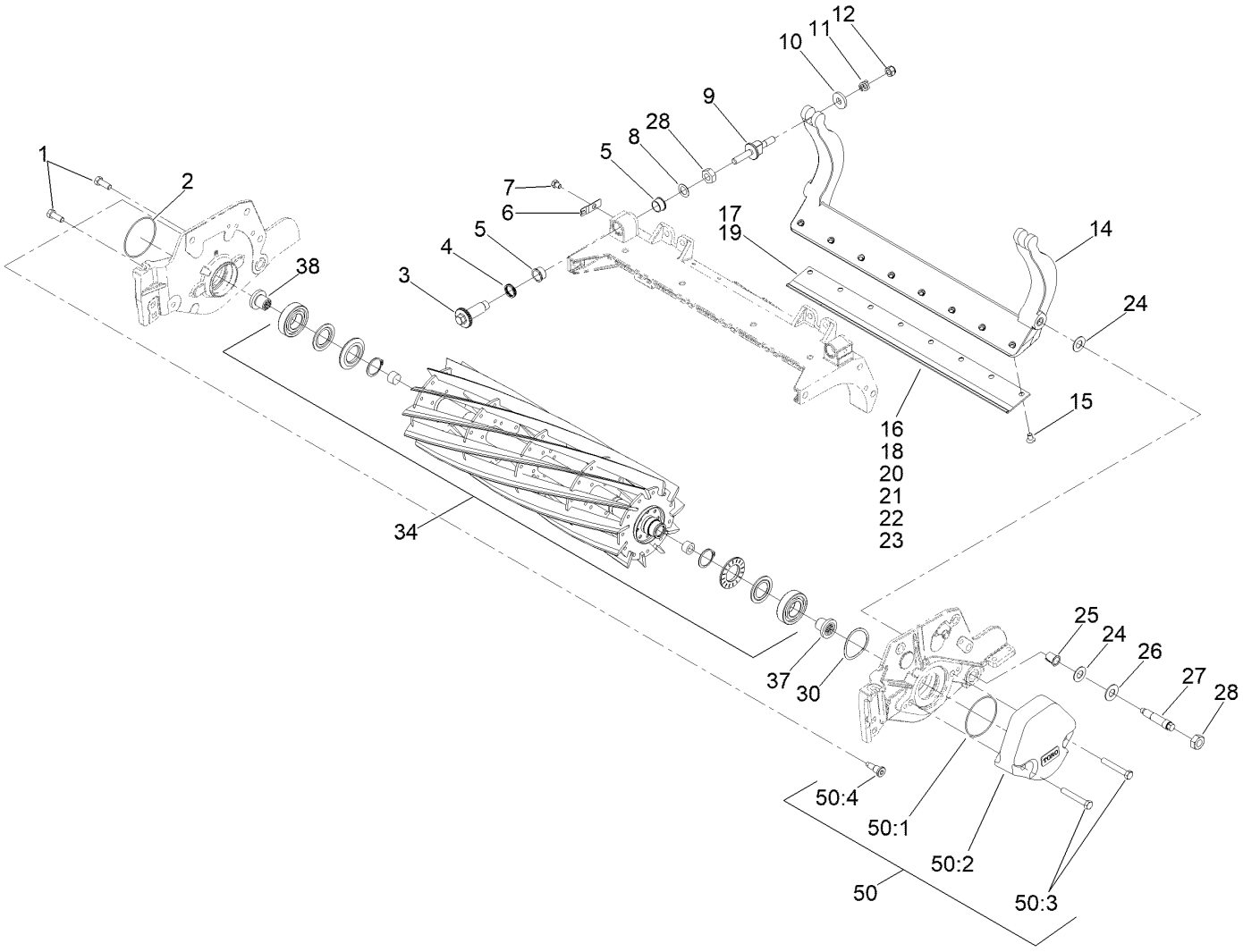

Reel and Bedbar Assembly (continued)

Ref.	Part Number	Qty.	Description
1	323-6	2	Screw-HH
2	112-6967	1	O-Ring
3	120-5118	2	Shaft-Adjuster
4	120-5116	2	Washer-Wave
5	106-5344	4	Bushing-Flange, Keyed
6	99-2097	2	Detent
7	119-4067	2	Screw-HH
8	108-0015	2	Washer-Flat
9	137-6130	2	Screw-Adjuster, Bedbar
10	119-4155	2	Washer-Hardened
11	120-5120	2	Spring-Compression
12	119-4039	2	Nut-Hex
14	107-3273-01	1	Bedbar
14	131-3221-0P	1	Bedbar-Aggressive, 7In ■
15	119-4151	11	Screw-Bedknife
16	147-1257	1	Bedknife-Tournament (Rm 22In) ■
17	137-6094	1	Bedknife-Edgemax (Rm 22In) ■
18	147-1245	1	Bedknife-STD (Rm 22In) ■
19	137-6093	1	Bedknife-Edgemax Lowcut (Rm 22In)
20	147-1244	1	Bedknife-Lowcut (Rm 22In) ■
21	119-4280	1	Bedknife-Edgemax Extended Low HOC, Fairw ■
22	147-1243	1	Bedknife-Lowcut EXT (Rm 22In) ■
23	147-1246	1	Bedknife-Highcut (Rm 22In) ■
24	61-1950	4	Washer-Plastic
25	56-9520	2	Bushing-Flanged
26	69-8980	2	Washer
27	106-9623	2	Bolt-Bedbar
28	3296-33	4	Nut-Lock, NI
30	115-5258	1	Spring-Wire, Flat
34	137-8447	1	ES Reel+,7In Fwy(22)11 Bld LD(Fsr)
37	127-7111	1	Insert-Threaded, 7 Inch (LH)
38	127-7109	1	Insert-Threaded, 7 Inch (RH)
45	120-7230	1	Rm HD DPA MVP Kit ● ■
50	127-7129	1	Weight Kit ■
50:1	112-6967	5	O-Ring
50:2	108-4269-01	5	Weight
50:3	323-12	10	Screw-HH
50:4	127-7122	5	Bolt-Shoulder, Flange Hex Socket

● Not illustrated

■ Optional Equipment

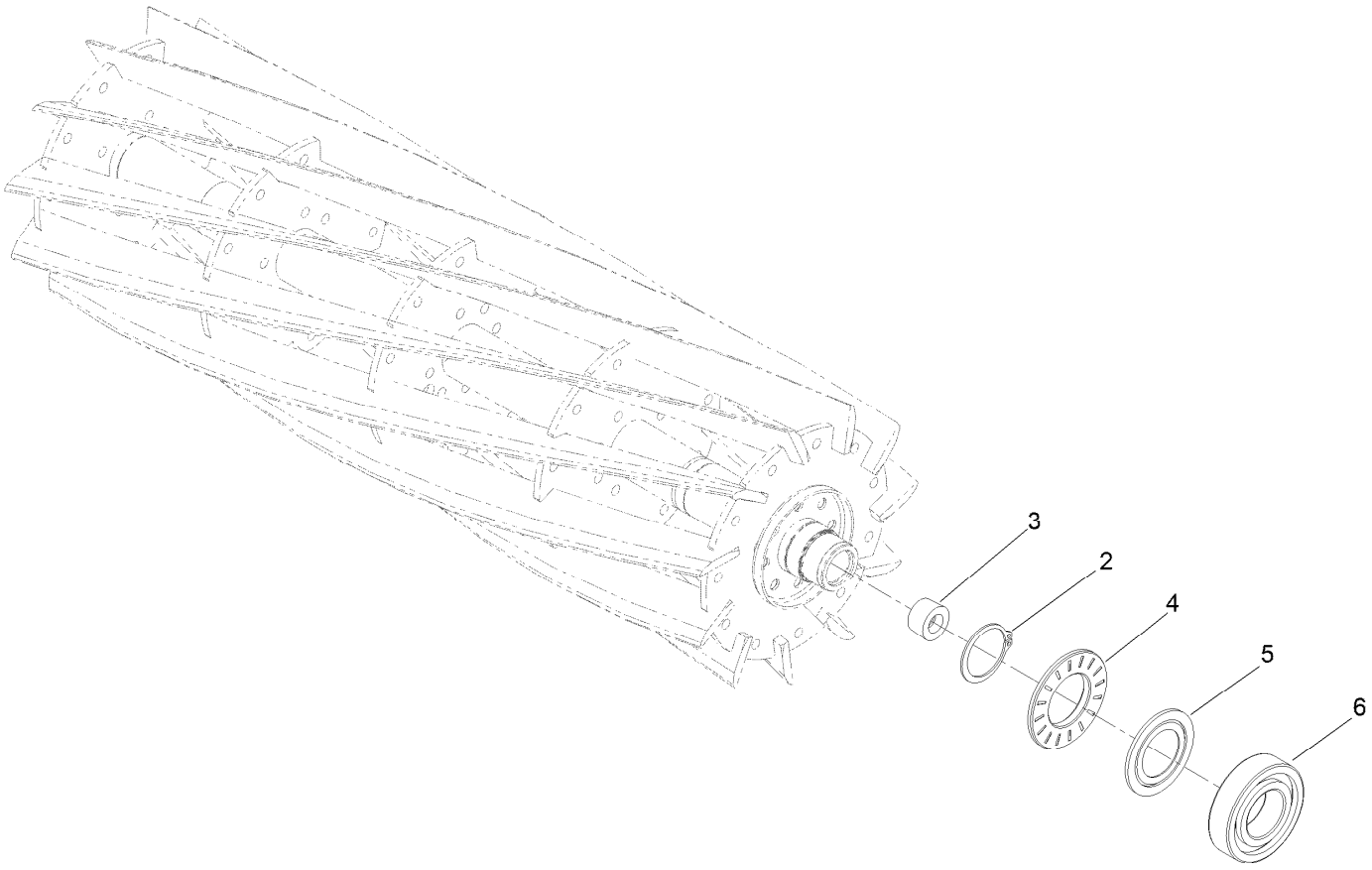

7in EdgeSeries+ 22in Fairway, 11 Blade Forward Swept Reel Assembly No. 137-8447

Ref.	*Part Number*	*Qty.*	*Description*
2	92-2601	2	Ring-Retaining
3	127-7118	2	Plug-Shaft, Reel
4	127-4284	2	Washer-Special
5	115-3299	2	Seal-Flocked
6	140-5510	2	Bearing-Sealed, Stainless

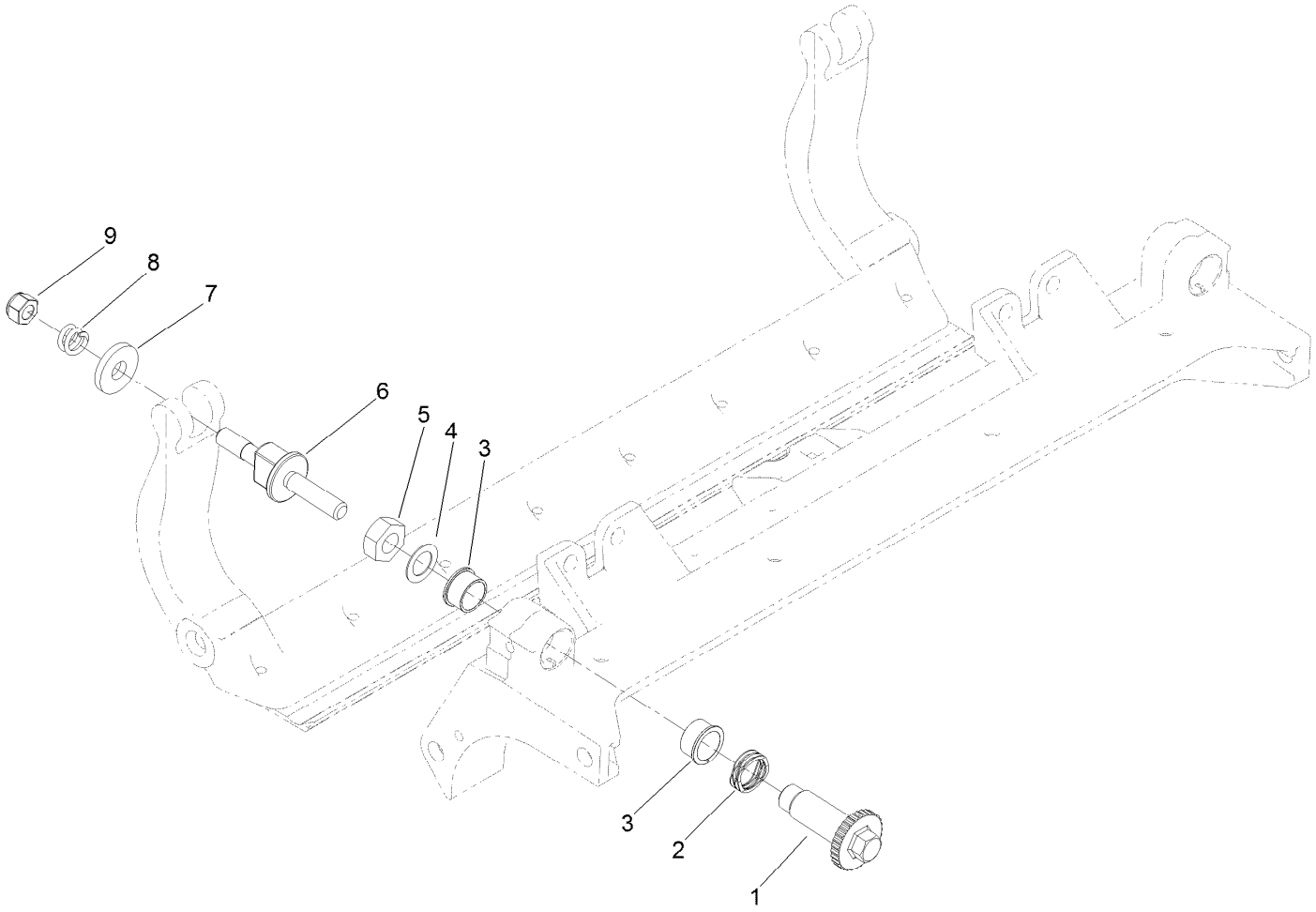

Optional Heavy-Duty MVP Kit No. 120-7230

Ref.	*Part Number*	*Qty.*	*Description*
1	120-5118	2	Shaft-Adjuster
2	120-5116	2	Washer-Wave
3	106-5344	4	Bushing-Flange, Keyed
4	108-0015	2	Washer-Flat
5	3296-33	2	Nut-Lock, NI
6	137-6130	2	Screw-Adjuster, Bedbar
7	119-4155	2	Washer-Hardened
8	120-5120	2	Spring-Compression
9	119-4039	2	Nut-Hex

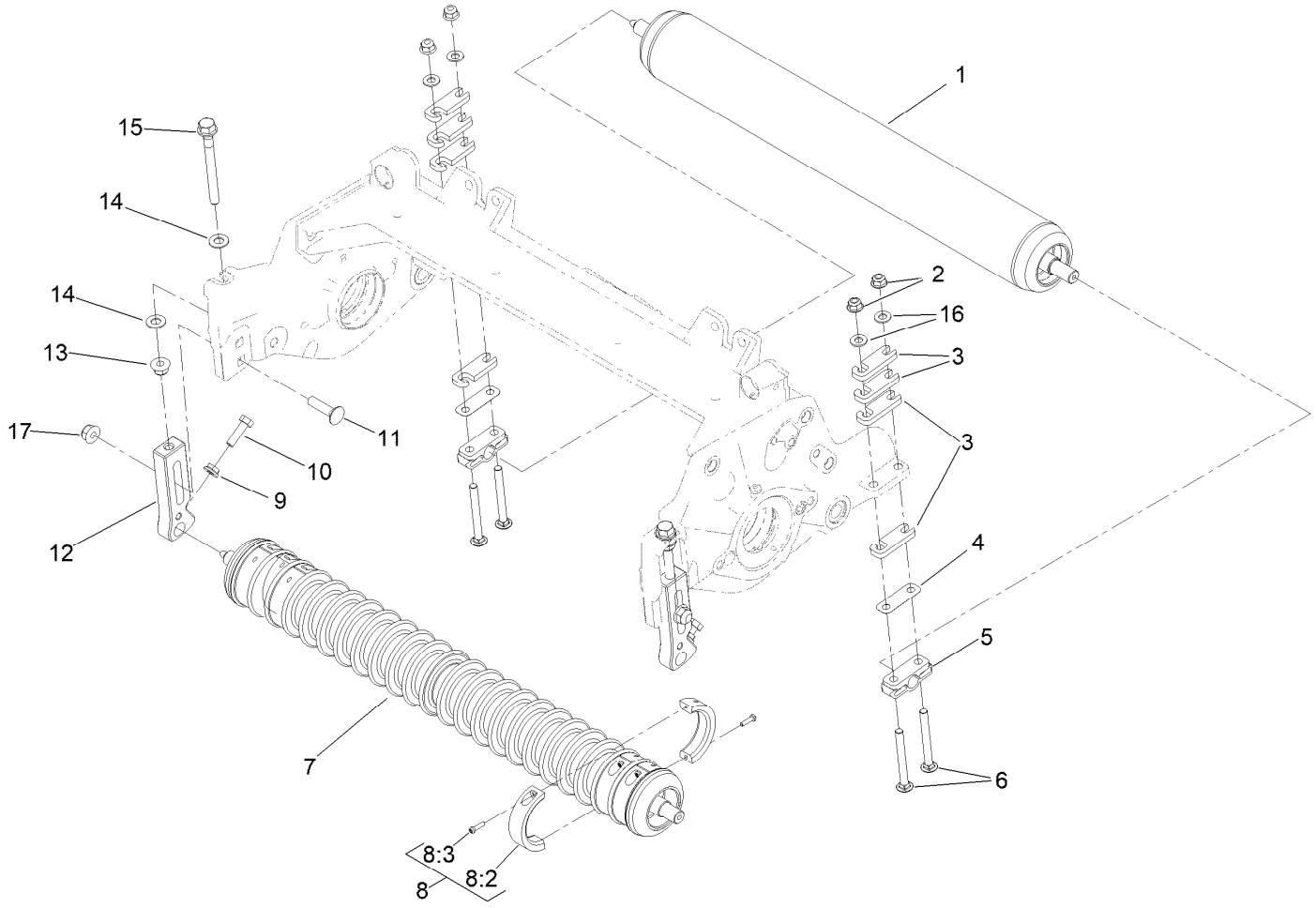

Roller Assembly

Ref.	Part Number	Qty.	Description
1	137-6113	1	Long Rear Roller ASM (3In DIA)(22In)
1	137-6117	1	Short Rear Roller ASM (3In DIA)(22In) ●■
2	119-4041	4	Nut-HF
3	119-0626	4	Shim-Roller
4	140-5530	2	Shim-Roller (.01") ■
5	106-3924	2	Bracket-Roller, Rear
6	3230-7	4	Bolt-CARR
7	114-5400	1	Plastic Wiehle Roller ASM
7	114-5421	1	Plastic Shoulder Roller ASM ●■
7	137-6111	1	Full Front Roller ASM (3In DIA)(22In) ●■

Ref.	Part Number	Qty.	Description
8	104-8215	6	Collar Kit ■
8:2	100-4959	2	Collar
8:3	104-1835	2	Screw
9	32128-20	2	Nut-HF
10	322-16	2	Screw-HH
11	3231-4	2	Screw-CARR
12	140-5690	2	Bracket-Rm Front HOC
13	119-4042	2	Nut-HF, NI
14	48-9220	4	Washer-Flat
15	140-5522	2	Screw-HHF 5/8, Patch
16	94-6936	4	Washer-Hard
17	133-7570	2	Nut-Flange, NI
50	137-0890	1	Rm DPA High HOC Kit (F18 & Up) ●■

● Not illustrated

■ Optional Equipment

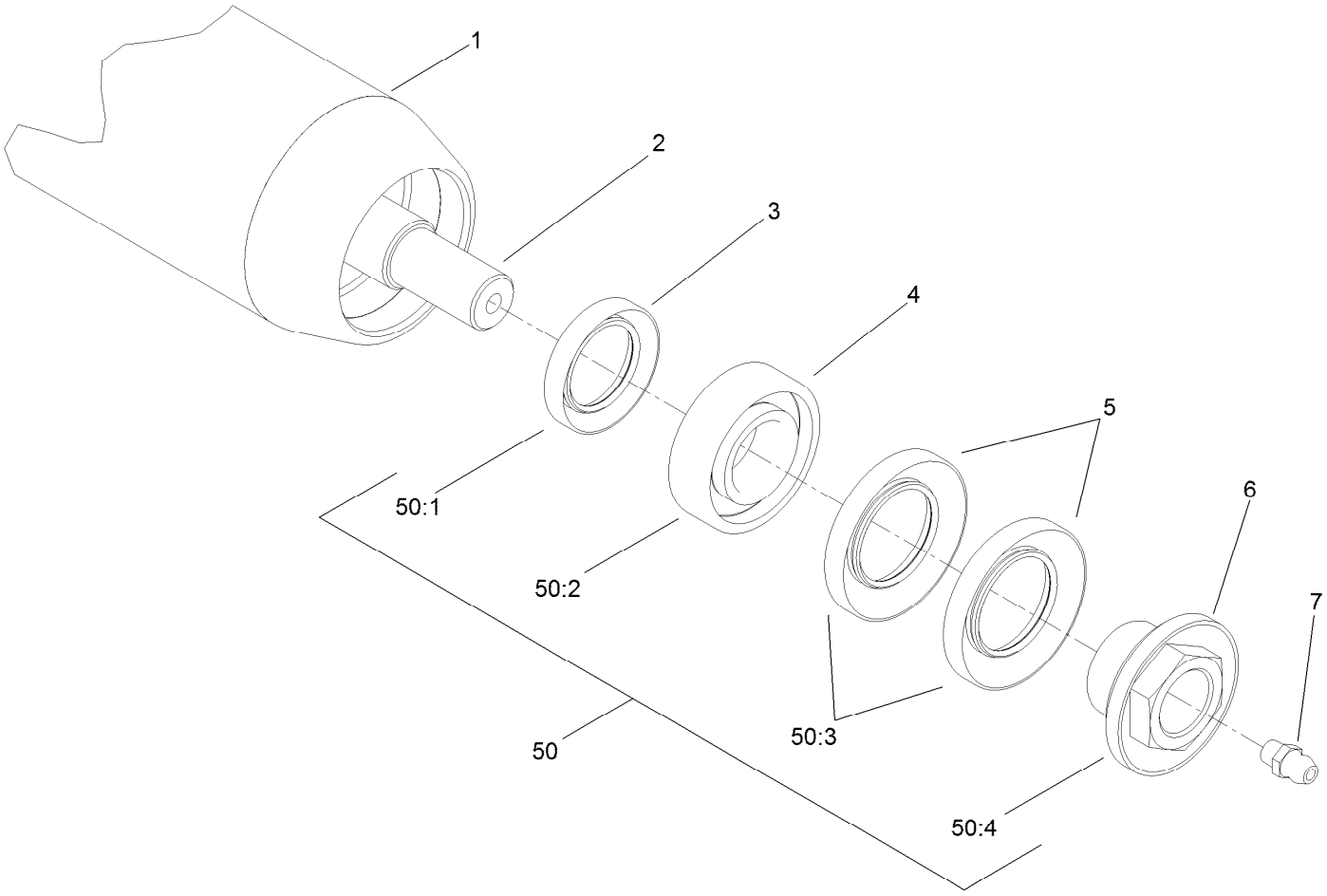

3 Inch Diameter Long Roller Assembly
No. 137-6113

Ref.	*Part Number*	*Qty.*	*Description*
1	137-6112	1	Tube Roller 3.0In DIA X 23In
2	114-5407	1	Shaft-Long, Rear Roller
3	114-3717	2	Seal-Oil
4	112-5290	2	Bearing-Steel, Stainless
5	112-7494	4	Seal
6	147-0701	2	Nut-Lock, Bearing
7	302-5	2	Fitting-Grease
50	114-5430	1	Roller Rebuild Kit ●
50:1	114-3717	2	Seal-Oil
50:2	112-5290	2	Bearing-Steel, Stainless
50:3	112-7494	4	Seal
50:4	147-0701	2	Nut-Lock, Bearing

● Optional Equipment

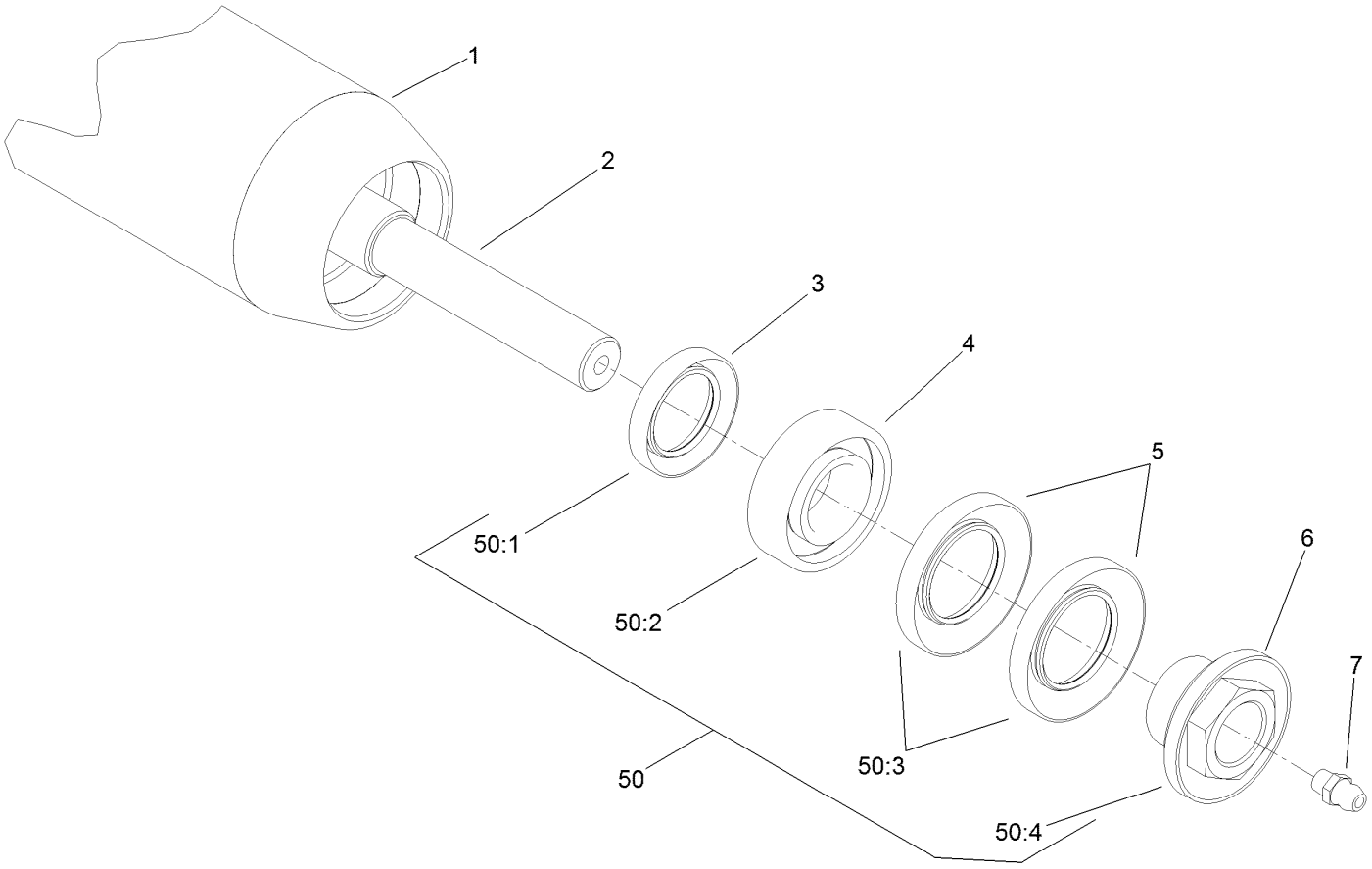

Optional 3 Inch Diameter Short Roller Assembly No. 137-6117

Ref.	*Part Number*	*Qty.*	*Description*
1	137-6115	1	Tube Roller 3.0In DIA X 20.5In
2	114-5410	1	Shaft-Short, Rear Roller
3	114-3717	2	Seal-Oil
4	112-5290	2	Bearing-Steel, Stainless
5	112-7494	4	Seal
6	147-0701	2	Nut-Lock, Bearing
7	302-5	2	Fitting-Grease
50	114-5430	1	Roller Rebuild Kit ●
50:1	114-3717	2	Seal-Oil
50:2	112-5290	2	Bearing-Steel, Stainless
50:3	112-7494	4	Seal
50:4	147-0701	2	Nut-Lock, Bearing

● Optional Equipment

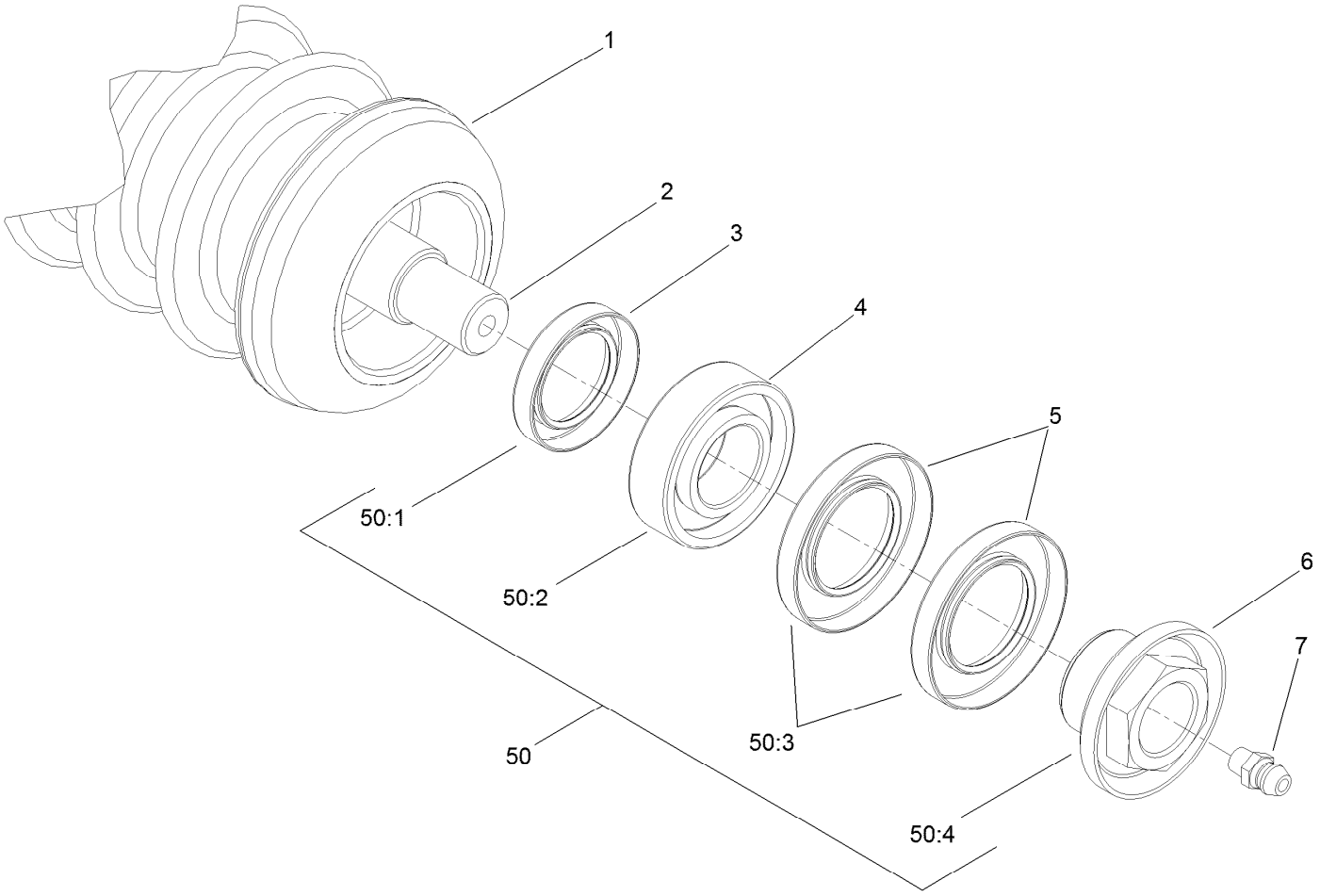

Plastic Wiehle Roller Assembly No. 114-5400

Ref.	*Part Number*	*Qty.*	*Description*
1	114-5401	1	Wiehle Roller Plastic (22In)
2	114-5403	1	Shaft-Roller, Front
3	114-3717	2	Seal-Oil
4	112-5290	2	Bearing-Steel, Stainless
5	112-7494	4	Seal
6	147-0701	2	Nut-Lock, Bearing
7	302-5	2	Fitting-Grease
50	114-5430	1	Roller Rebuild Kit ●
50:1	114-3717	2	Seal-Oil
50:2	112-5290	2	Bearing-Steel, Stainless
50:3	112-7494	4	Seal
50:4	147-0701	2	Nut-Lock, Bearing

● Optional Equipment

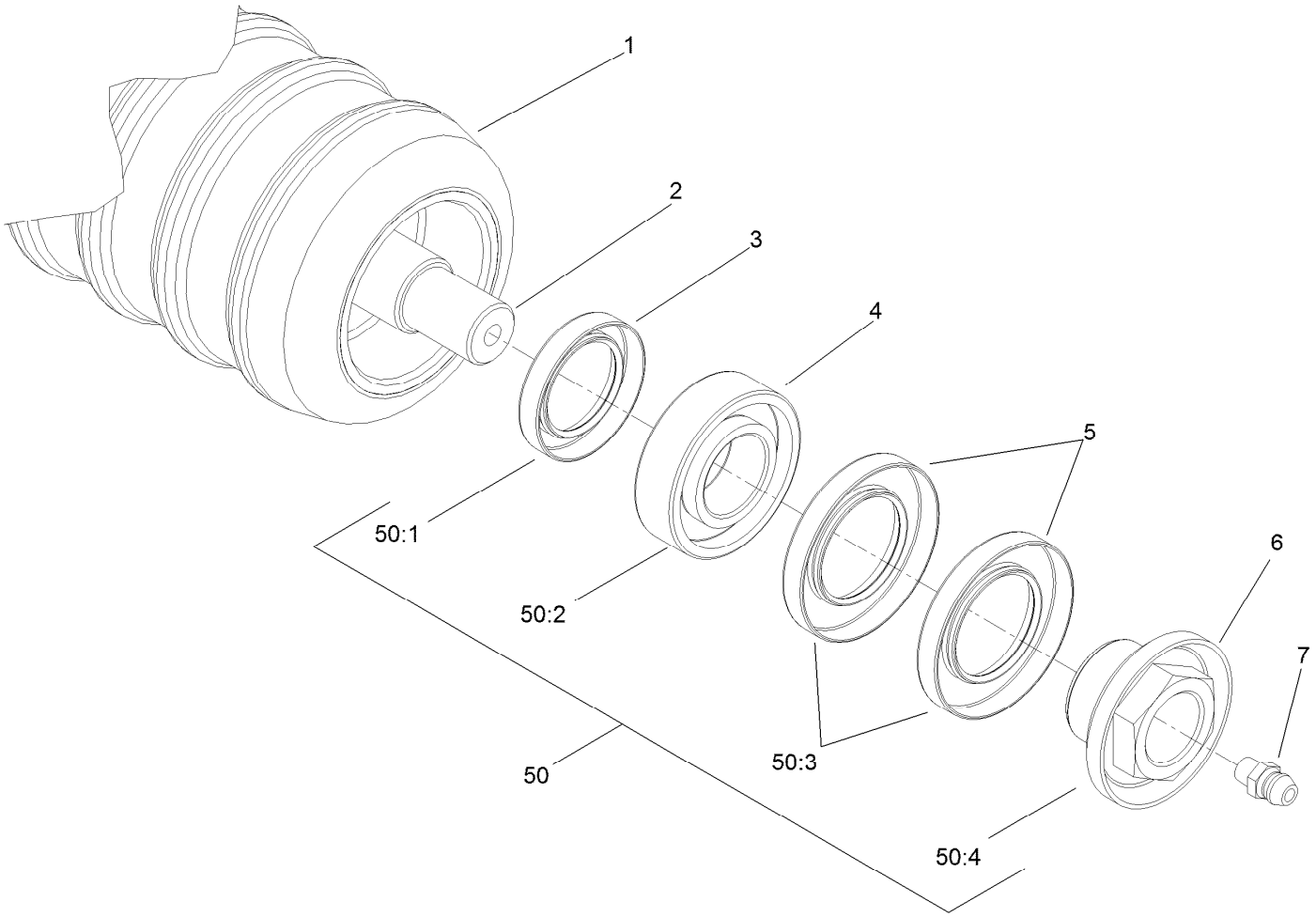

Optional Plastic Shoulder Roller Assembly No. 114-5421

Ref.	*Part Number*	*Qty.*	*Description*
1	114-5422	1	Roller-Shoulder, Plastic
2	114-5403	1	Shaft-Roller, Front
3	114-3717	2	Seal-Oil
4	112-5290	2	Bearing-Steel, Stainless
5	112-7494	4	Seal
6	147-0701	2	Nut-Lock, Bearing
7	302-5	2	Fitting-Grease
50	114-5430	1	Roller Rebuild Kit ●
50:1	114-3717	2	Seal-Oil
50:2	112-5290	2	Bearing-Steel, Stainless
50:3	112-7494	4	Seal
50:4	147-0701	2	Nut-Lock, Bearing

● Optional Equipment

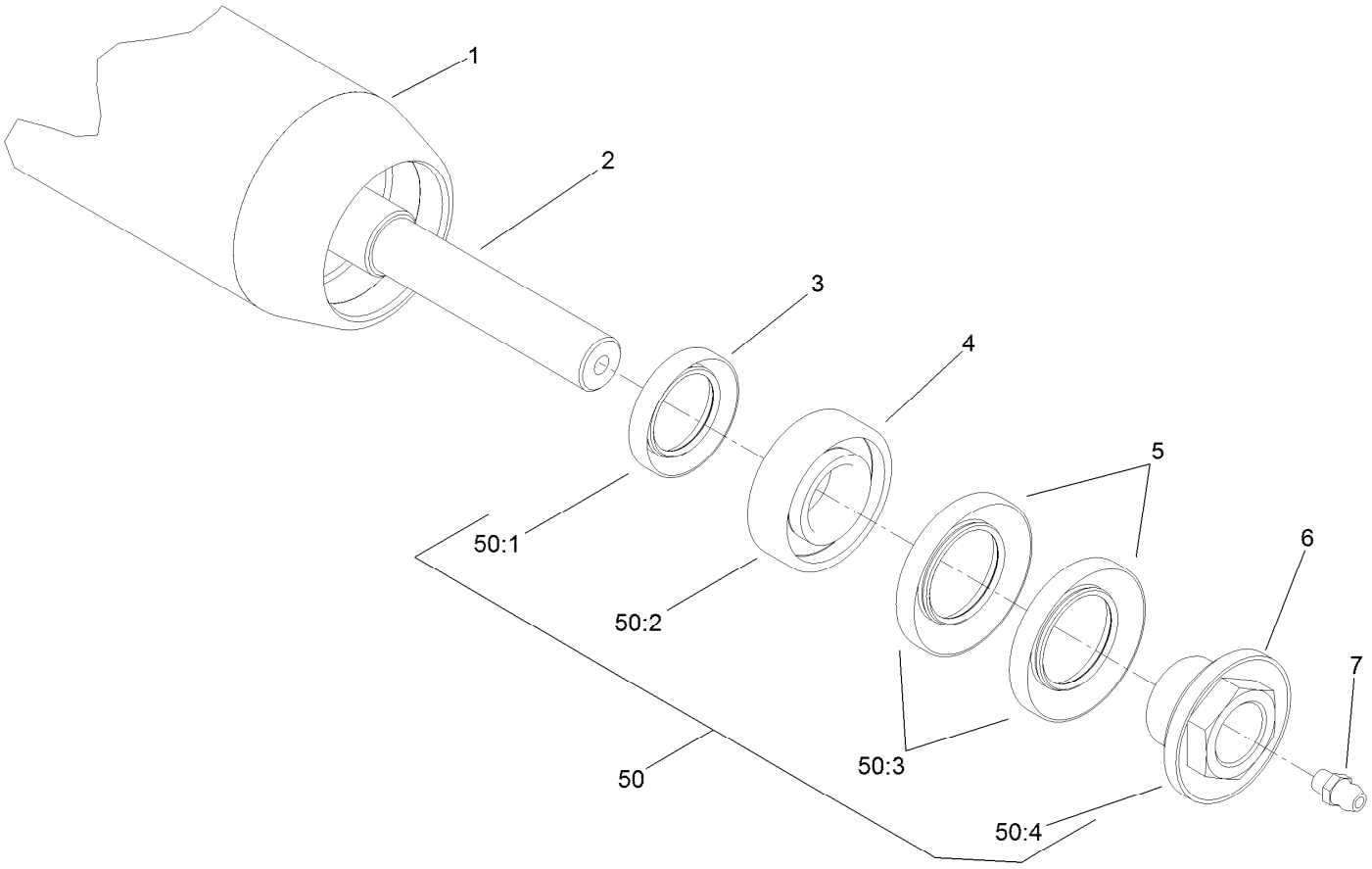

Optional Full Front Roller Assembly No. 137-6111

Ref.	*Part Number*	*Qty.*	*Description*
1	137-6110	1	Tube Roller 3.0In DIA X 24.5In
2	114-5403	1	Shaft-Roller, Front
3	114-3717	2	Seal-Oil
4	112-5290	2	Bearing-Steel, Stainless
5	112-7494	4	Seal
6	147-0701	2	Nut-Lock, Bearing
7	302-5	2	Fitting-Grease
50	114-5430	1	Roller Rebuild Kit ●
50:1	114-3717	2	Seal-Oil
50:2	112-5290	2	Bearing-Steel, Stainless
50:3	112-7494	4	Seal
50:4	147-0701	2	Nut-Lock, Bearing

● Optional Equipment

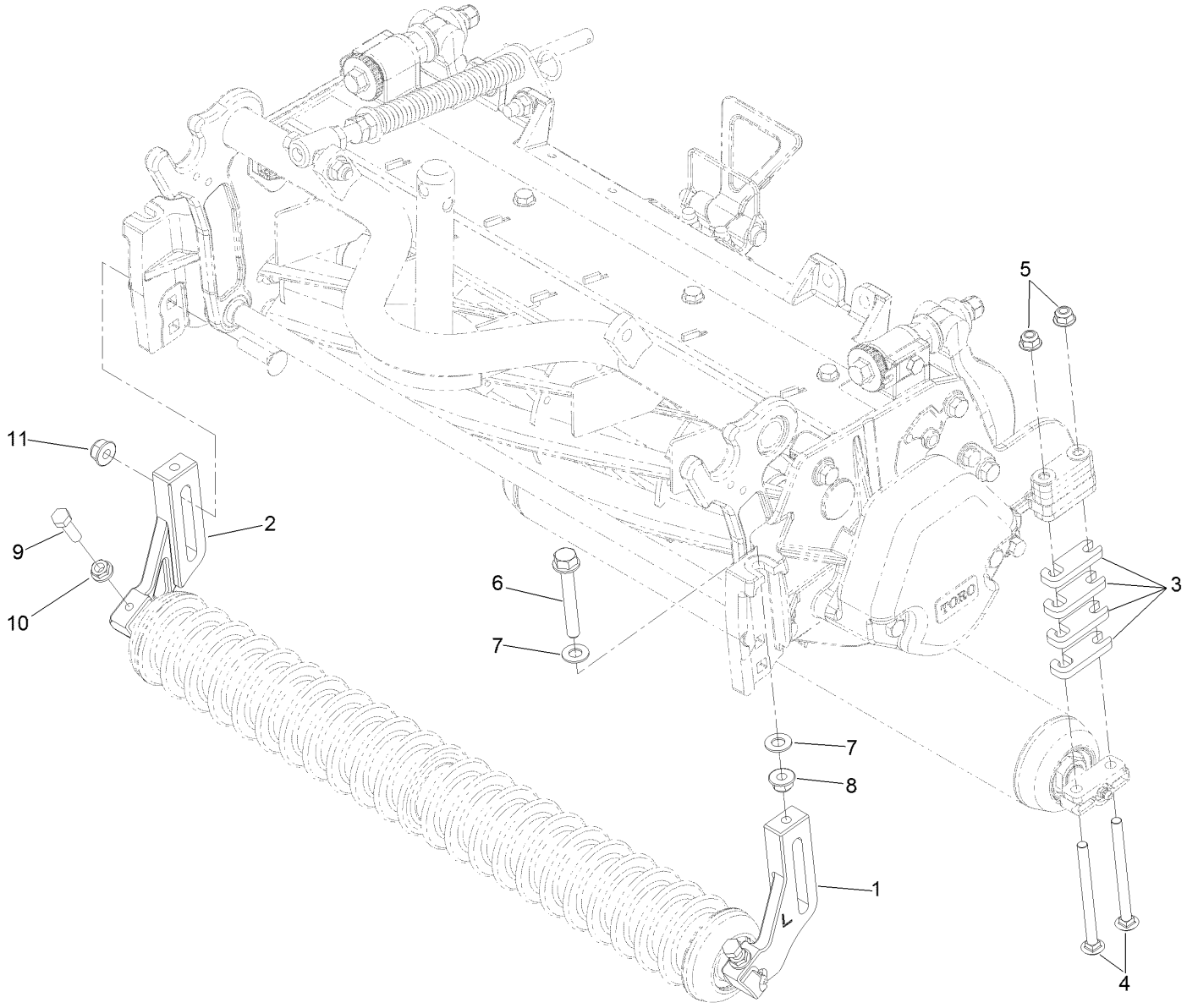

Optional High Height-of-Cut Assembly No. 137-0890

Ref.	*Part Number*	*Qty.*	*Description*
1	120-0404	1	Bracket-High HOC (LH)
2	120-0405	1	Bracket-High HOC (RH)
3	119-0626	8	Shim-Roller
4	3230-30	4	Screw-CARR
4	106-9758	4	Screw-CARR
5	119-4041	4	Nut-HF
6	140-5523	2	Screw-HHF 5/8, Patch
7	48-9220	4	Washer-Flat
8	119-4042	4	Nut-HF, NI
9	322-16	2	Screw-HH
10	32128-20	2	Nut-HF
11	133-7570	2	Nut-Flange, NI

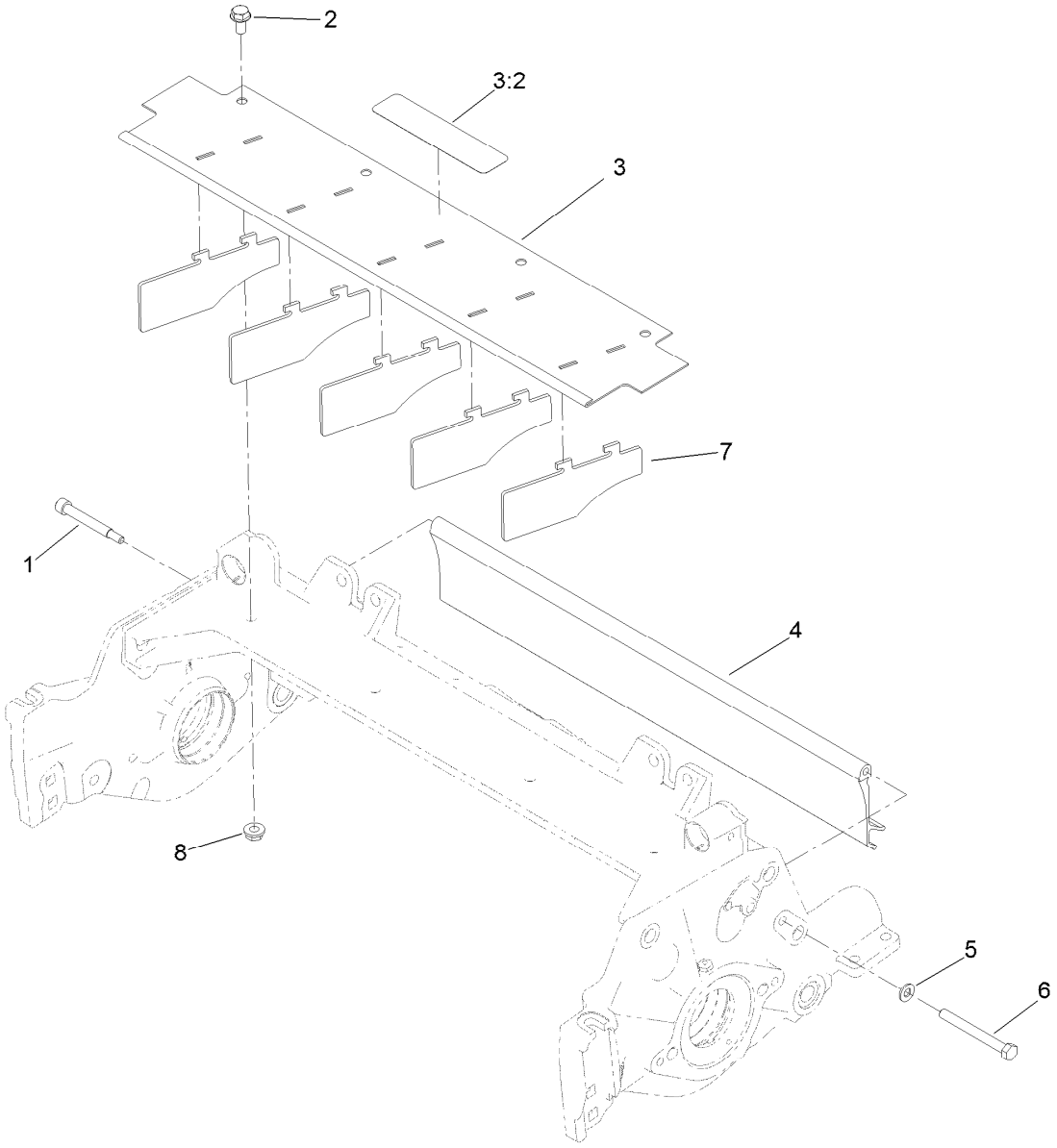

Shield Assembly

Ref.	*Part Number*	*Qty.*	*Description*
1	107-7773	1	Screw-HSH
2	3234-7	4	Screw-HHF
3	107-2996	1	Front Grass Shield ASM
3:2	137-9706	1	Decal-Warning
4	125-1978	1	Shield-Grass, Rear
5	3256-74	1	Washer-Flat
6	322-14	1	Screw-HH
7	110-1706	5	Deflector
8	32128-20	4	Nut-HF

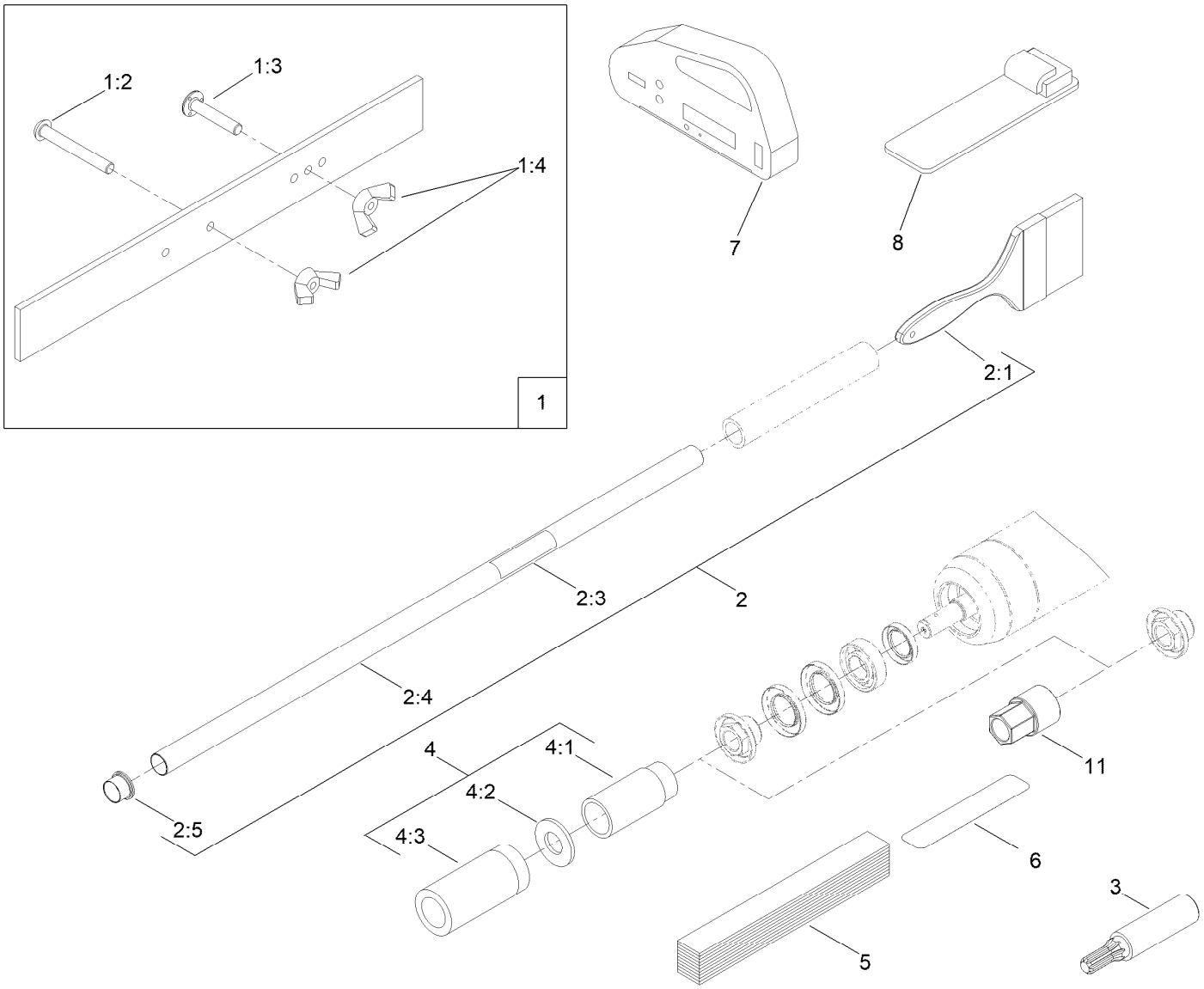

Optional Tool Assembly

Ref.	Part Number	Qty.	Description
1	108-6715	1	Gauge Bar ASM
1:2	32122-54	1	Screw-Head, Truss
1:3	108-6714	1	Stud-Weld
1:4	32103-3	2	Nut-Wing
2	29-9100	1	Brush And Handle ASM
2:1	36-4310	1	Brush
2:3	98-3206	1	Decal
2:4	29-9080	1	Handle
2:5	2410-18	1	Cap-Plastic
3	TOR4074	1	Adapter-Drive, Reel ■
4	115-0803	1	Rm/Gm Roller Rebuild Tool Kit

Ref.	Part Number	Qty.	Description
4:1	115-0852	1	Tool-Inner Seal
4:2	107-8133	1	Washer-Flat
4:3	115-0853	1	Tool-Bearing/Outer Seal
5	125-5610	1	Paper-Reel, Toro (10 Pack)
6	140-5531	1	Shim-Toro Reel (.002In)
7	131-6828	1	Indicator-Angle
8	131-6829	1	Mount-Indicator, Angle
9	137-0924	1	Tool-Hand TAP 7/8-16 (Rm DPA Reel) ●
10	137-0925	1	Tool-Hand TAP 7/8-16, LH (Rm DPA Reel) ●
11	147-1132	1	Tool-Drive, Roller Nut

● Not illustrated
■ Obtain directly from K-Line Industries, Inc. (https://klineind.com)

Attachments and Accessories

For 03641 — 11-Blade EdgeSeries Forward Swept DPA Cutting Unit with 7in Reel Reelmaster 3575 or 5010 Series Traction Unit

Product Name	Model/Part
Verticutter for 7in Reel Cutting Unit	03619
22in Fairway Flex Grass Basket Kit	03415
22in Fairway Compact Grass Basket Kit	03416
Groomer Rod Kit	131-6845
Rear Roller Brush Kit (7in Reel)	03408
Weight Kit for 8-Blade or 11-Blade DPA Cutting Unit with 7in Reel Traction Unit	03405
Rear Lift Cylinder Limit Kit	110-9604
Rear Roller Scraper Kit	107-3280
Wiehle Scraper ASM	107-2993-03
Comb/Scraper Kit	110-1735
Full Front Roller Asm (3in Dia)(22in)	137-6111
3in Full Front Roller Scraper	110-9602-03
Plastic Shoulder Roller ASM	114-5421
Shoulder Roller Scraper ASM	110-9609-03
High Height-of-Cut Kit, Reelmaster 3000 or 5000 Series DPA Cutting Unit	137-0890
3in Dia Collar Kit	104-8215
Cutting Unit Kickstand	119-8010-03
Reel Drive Adapter	TOR4074
Roller Rebuild Tool Kit	115-0803
Brush-Roller (High Height-Of-Cut)	110-1740
22in Rear Roller HD Brush	137-0842
Gauge Bar Assembly	108-6715
Roller Rebuild Kit	114-5430
Groomer/RRB Seal Kit	131-3233
Heavy-Duty DPA MVP Kit	120-7230
Rear Roller Adjustment Kit	125-0570
Bedbar-Aggressive, 7in	131-3221-0P
Bedknife-Tournament (RM 22in)	147-1257
Bedknife-Edgemax (rm 22in)	137-6094
Bedknife-STD (RM 22in)	147-1245
Bedknife-Edgemax Lowcut	137-6093
Bedknife-Lowcut (RM 22in)	147-1244
Bedknife Edgemax Low cut Extended (Fairway)	119-4280
Bedknife-Lowcut Ext (RM 22in)	147-1243
Bedknife-Highcut (RM 22in)	147-1246
EdgeSeries Reel+, 7in Fairway(22in)11 Blade Low Drag(Forward Swept Reel)	137-8447
Universal Groomer Drive Kit	03768
Universal Groomer Cartridge, Reelmaster 3555, 3575, 5010, and 5010-H Series 22-inch EdgeSeries Cutting Units with Universal Groomer	03772
Grooming Brush (22In)	03767
Broomer Kit (22In)	132-7125
Rear Roller Brush Kit for Units with 7in Reel and Universal Groomer (22in)	03659
Weight Kit for Units with 5 Inch Electric Reel or 7 Inch Electric or Hydraulic Reel and Universal Groomer Only	03418
Weight Kit for Units with 5 Inch Electric Reel or 7 Inch Electric or Hydraulic Reel and Universal Groomer with Rear Roller Brush	03419

Attachments and Accessories (continued)

Universal Groomer Drive MVP Kit, Reelmaster 22-inch or 27-inch EdgeSeries Cutting Units with 7-inch Reel 140-5607

Rear Roller Brush MVP Kit, Reelmaster 5010-H Series 22-inch Cutting Unit with 7-inch Reel and Universal Groomer 133-0154

Rear Roller Brush MVP Kit, Reelmaster 5010-H Series Cutting Unit with 7 Inch Reel 133-0158

LH 7in Heavy Duty Low Drag Side Plate ASM 137-5982

RH 7in Heavy Duty Low Drag Side Plate ASM 137-5983

Tool-hand Tap 7/8-16 (RM DPA Reel) 137-0924

Tool-hand Tap 7/8-16, LH (RM DPA Reel) 137-0925

Toro Reel Paper (10 Pack) 125-5610

Angle Indicator 131-6828

Angle Indicator Mount 131-6829

Shim-TORO Reel (.002in) 140-5531

Notes:

Notes:

Notes:



Count on it.