Form No. 3351–272

DFS Vac Collection System Weight Kit

500 Series Z Masters with 52in Mowers and Liquid–Cooled Z Masters with 60in Mowers

Part No. 107–1760
Part No. 107–1780

Installation Instructions

Note: To comply with ANSI/OPEI B71.4–1999 Standard, top weights must be added to the following machines when a DFS Bagger is installed.

- 500 Series Z Masters with 52 inch mowers
- 500 Series Liquid Cooled Z Masters with 60 inch mowers

Loose Parts

Note: Use the chart below to identify parts for assembly.

Step	Description	Qty.	Use
1	Top weight	2	Installing the weights on a 52 inch mower
	Bolt, 1/2 x 4 inch	2	
	U–Bolt, 3/8 X 6 inch	2	
	Single weight plate	1	
	Lock nut, 3/8 inch	4	
	Washer, 3/8 inch	4	
	Spacer	4	
2	Top weight	2	Installing the weights on a liquid cooled 60 inch mower
	Bolt, 1/2 x 4 inch	2	
	U–Bolt, 3/8 X 6 inch	2	
	Single weight plate	1	
	Double weight plate	2	
	Lock nut, 3/8 inch	4	
	Washer, 3/8 inch	4	

© 2003 by The Toro Company
8111 Lyndale Avenue South
Bloomington, MN 55420-1196

Contact us at www.Toro.com
All Rights Reserved
Printed in the USA

Step 1

Installing the Weights on a 52 inch Mower

Parts needed for this step:

Qty.	Part
2	Top weight
2	Bolt, 1/2 x 4 inch
2	U–Bolt, 3/8 X 6 inch
1	Single weight plate
4	Lock nut, 3/8 inch
4	Washer, 3/8 inch
4	Spacer

Procedure

Note: Remove or discard the bolt included with the DFS Bagger to install the top weights. This bolt is too short for installing 3 top weights.

Note: There are 2 top weights included with the DFS Bagger and ensure they are used on the machine.

1. Place the top weights on top of the front caster weights (Fig. 1).

2. Secure the top weights with a bolt (1/2 x 4 inch) (Fig. 1).

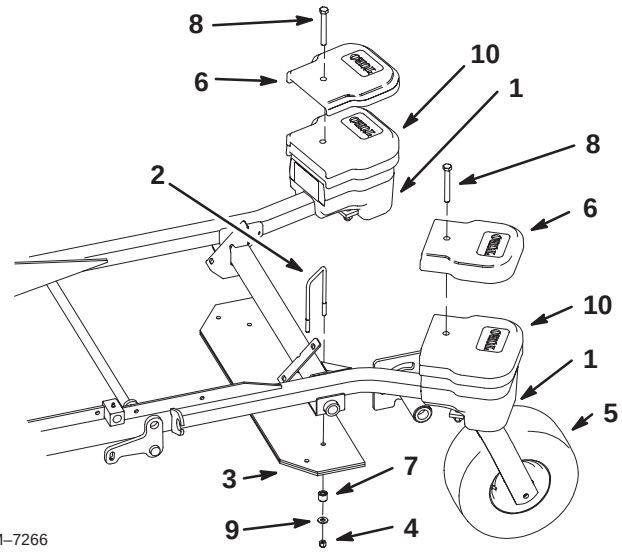

Figure 1

1. Front caster weight
2. U–bolt
3. Single weight plate
4. Lock nut, 3/8 inch
5. Front caster
6. Top weight
7. Spacer
8. Bolt, 1/2 x 4 inch
9. Washer, 3/8 inch
10. Top weights—included with DFS Bagger

3. Raise the foot pan and then remove the footrest from the machine (Fig. 2).

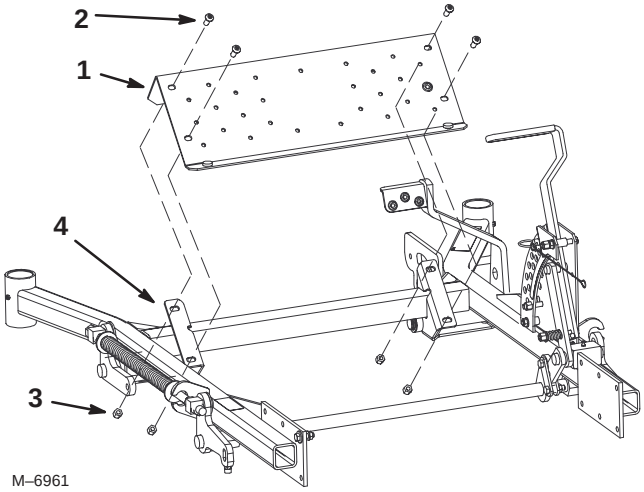

Figure 2

1. Footrest
2. Bolt
3. Nut
4. Machine frame

4. Install the single weight plate onto the machine frame with 2 U–bolts (3/8 x 6 inch), 2 spacers, 2 washers (3/8 inch), and 2 nuts (3/8 inch) (Fig. 1).

5. Install the footrest onto the machine and lower the footpan (Fig. 2).

Step 2

Installing the Weights on a Liquid Cooled 60 inch Mower

Parts needed for this step:

Qty.	Part
2	Top weight
2	Bolt, 1/2 x 4 inch
2	U–Bolt, 3/8 X 6 inch
1	Single weight plate
2	Double weight plate
4	Lock nut, 3/8 inch
4	Washer, 3/8 inch

Procedure

Note: Remove or discard the bolt included with the DFS Bagger to install the top weights. This bolt is too short for installing 3 top weights.

Note: There are 2 top weights included with the DFS Bagger and ensure they are used on the machine.

1. Place the top weights on top of the front caster weights (Fig. 3).

2. Secure the top weights with a bolt (1/2 x 4 inch) (Fig. 3).

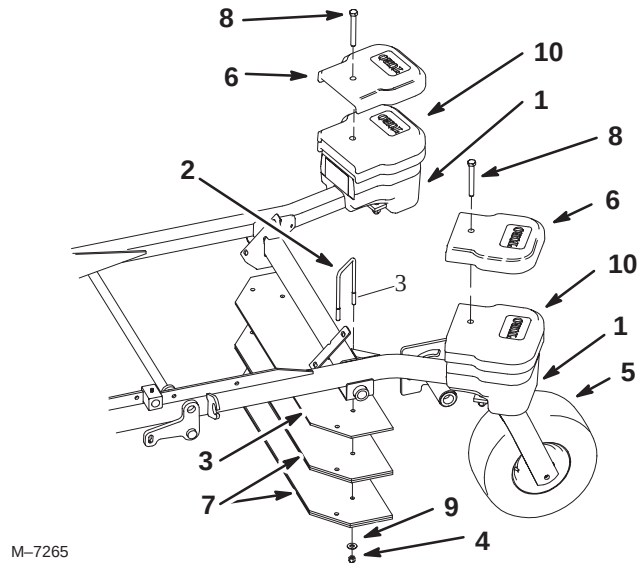

Figure 3

1. Front caster weight
2. U–bolt
3. Single weight plate
4. Lock nut, 3/8 inch
5. Front caster
6. Top weight
7. Double weight plate
8. Bolt, 1/2 x 4 inch
9. Washer, 3/8 inch
10. Top weights—included with DFS Bagger

---

3. Raise the foot pan and then remove the footrest from the machine (Fig. 4).

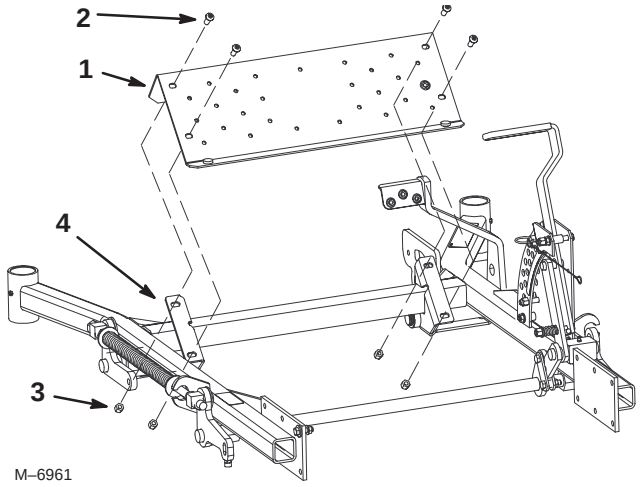

Figure 4

1. Footrest
2. Bolt
3. Nut
4. Machine frame

---

4. Install the single and 2 double weight plates onto the machine frame with 2 U–bolts (3/8 x 6 inch), 2 washers (3/8 inch), and 2 nuts (3/8 inch) (Fig. 3).

5. Install the footrest onto the machine and lower the footpan (Fig. 4).