Form No. 3479-800 Rev A

TORO®

Count on it.

Parts Catalog

Reelmaster® 5610-D

Traction Unit

Model No. 03966—Serial No. 420000000 and Up

Register at www.Toro.com.
Original Instructions (EN)

3479-800 A

Ordering Replacement Parts

To order replacement parts, please supply the part number, the quantity, and the description of each part desired.

Understanding Reference Numbers

Each identified part in an illustration has a reference number. The reference number for a part also appears in the parts list, along with other information about the part.

This catalog uses two special reference number formats, one to indicate parts in a service assembly and another to indicate the quantity of a given part in an illustration.

Service Assembly Reference Numbers

Parts in service assemblies have reference numbers in the form a:b. The a represents the reference number of the entire service assembly and the b represents a sequential number unique to each part within the service assembly.

For example, a wheel assembly might be identified by reference number 6, the tire by 6:1, the valve by 6:2, and the wheel by 6:3. When you order the assembly identified by reference number 6, you receive all parts identified by reference numbers 6:1,6:2, and 6:3. However, you may also order any part individually. Reference numbers of this type appear in illustration and in parts lists.

Reference Numbers Indicating Quantity

In an illustration, if a reference number indicates more than one part, the reference number has the form nX y. The n represents the quantity of the part, the X is the multiplication symbol, and the y represents the reference number.

For example, in an illustration, the reference number 2X 37 means that two of the parts identified by reference number 37 are indicated.

Contents

Frame Assembly . . . 5
Platform and Shroud Assembly . . . 6
Pedal Assembly . . . 7
Steering Assembly . . . 8
Steering Tilt Column Assembly No. 106-3622 . . . 10
Steering Valve Assembly No. 106-3621 . . . 11
Control Console Assembly . . . 12
Joystick Bracket Assembly No. 120-5280 . . . 14
Front Axle Assembly . . . 15
Rear Axle Assembly . . . 16
Tie Rod Assembly No. 139-6029 . . . 17
No. 1, 4 and 5 Lift Arm Hydraulic Assembly . . . 18
No. 2 and 3 Lift Arm Assembly . . . 20
Seat and Control Arm Wiring Harness Assembly . . . 21
Main Wiring Harness Assembly . . . 22
Wire Harness Assembly No. 122-2912 . . . 23
Battery and Engine Wiring Assembly . . . 24
Gear Pump Assembly . . . 25
Gear Pump Assembly No. 107-4547 . . . 26
Seat Base Assembly . . . 27
Hood Assembly . . . 28
Radiator Assembly . . . 30
Hydraulic Tank Assembly . . . 32
Fuel System Assembly . . . 33
Seat and Roll-Over Protection System Assembly . . . 35
Seat Assembly No. 139-2700 . . . 36
Mechanical Seat Suspension Assembly No. 145-5295 . . . 37
Traction Pump Mounting Assembly . . . 38
Hydraulic Pump Assembly No. 144-2060 . . . 39
Traction Hydraulic Assembly . . . 41
Hydraulic Motor Assembly No. 163-3542 . . . 43
Hydraulic Motor Assembly No. 163-3543 . . . 44
Hydraulic Motor Assembly No. 138-0436 . . . 45
Hydraulic Motor Assembly No. 138-0435 . . . 46
Four Wheel Drive Manifold Assembly No. 108-1825 . . . 47
Hydraulic Brake Assembly . . . 48
Brake Release Manifold Assembly No. 139-6046 . . . 49
No. 1, 4 and 5 Reel Drive Hydraulic Assembly . . . 50
Hydraulic Motor Assembly No. 120-6272 . . . 52
Manifold Assembly No. 121-5628 . . . 53
No. 2 and 3 Reel Drive Hydraulic Assembly . . . 54
No. 1, 4 and 5 Lift Arm Hydraulic Assembly . . . 56
Hydraulic Cylinder Assembly No. 163-2624 . . . 57
Hydraulic Cylinder Assembly No. 163-3534 . . . 58
Hydraulic Manifold Block Assembly No. 105-7577 . . . 59
Rear Lift Hydraulic Assembly . . . 60
Steering Hydraulic Assembly . . . 61
Hydraulic Cylinder Assembly No. 110-9035 . . . 63
Engine, Air Cleaner and Drive Shaft Assembly . . . 64
Air Cleaner Assembly No. 110-8917 . . . 66
Drivershaft Assembly No. 144-2053 . . . 67
Crankcase Assembly . . . 68
Oil Pan Assembly . . . 69
Cylinder Head Assembly . . . 70

© 2026—The Toro® Company
8111 Lyndale Avenue South
Bloomington, MN 55420

Contact us at www.Toro.com.
Printed in the USA.
All Rights Reserved

Contents (continued)

Gear Case Assembly . . . 71
Cylinder Head Cover Assembly . . . 72
Dipstick and Guide Assembly . . . 73
Main Bearing Case Assembly . . . 74
Cam Shaft and Idle Gear Shaft Assembly . . . 75
Piston and Crankshaft Assembly . . . 76
Flywheel Assembly . . . 77
Fuel Camshaft and Governor Shaft Assembly . . . 78
Idle Apparatus Assembly . . . 79
Injection Pump Assembly . . . 80
Speed Control Plate Assembly . . . 81
Nozzle Holder and Glow Plug Assembly . . . 82
Nozzle Holder Component Assembly . . . 83
Governor Assembly . . . 84
Alternator and Pulley Assembly . . . 85
Alternator Components Assembly . . . 86
Starter Assembly . . . 87
Water Flange and Thermostat Assembly . . . 88
Water Pump Assembly . . . 89
Overflow Bottle Assembly . . . 90
Valve and Rocker Arm Assembly . . . 91
Inlet and Exhaust Manifold Assembly . . . 92
Turbo Charger Assembly . . . 93
Oil Pipe (Turbo Charger) Assembly . . . 94
Oil Cooler Assembly . . . 95
Attachments and Accessories . . . 96

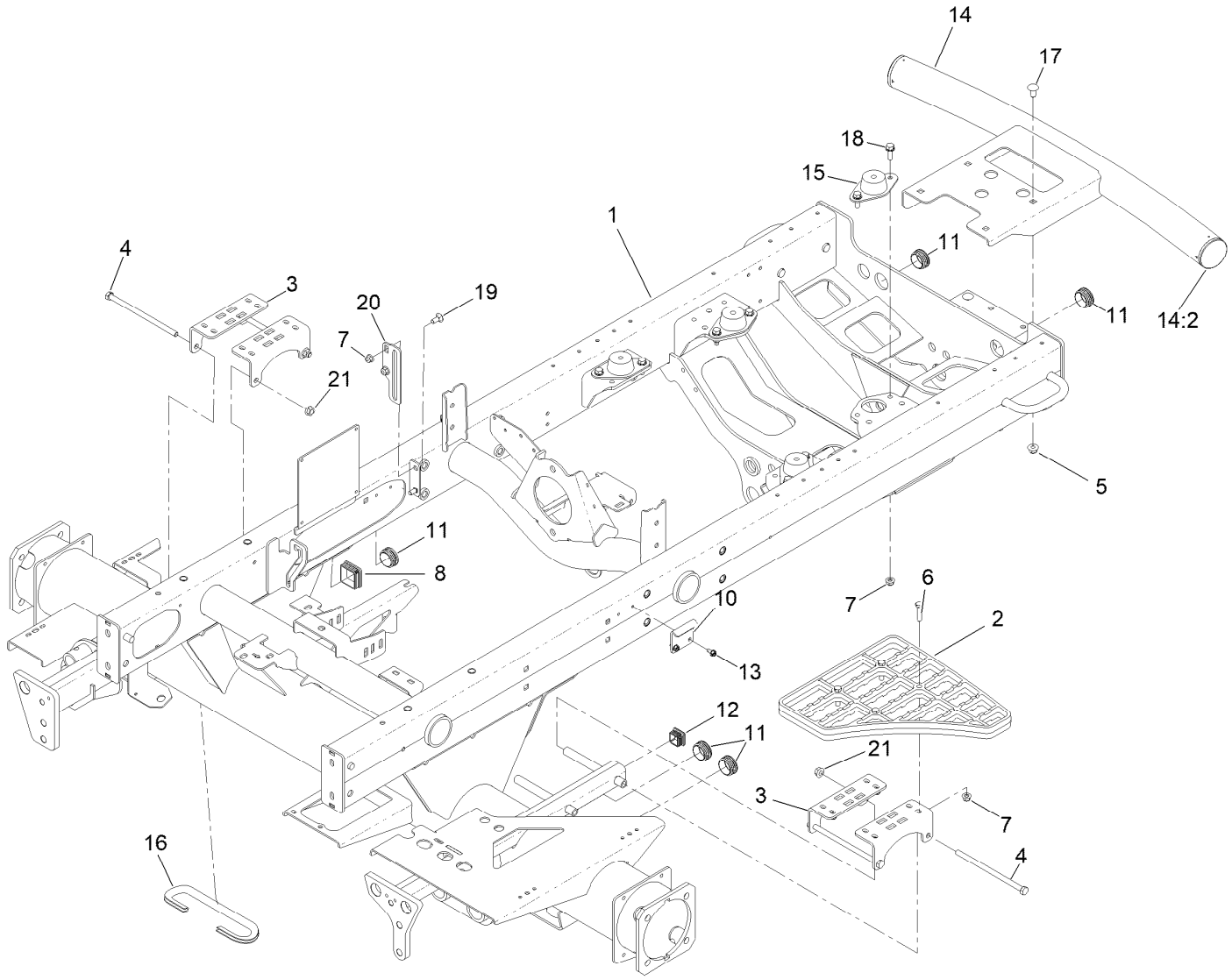

Frame Assembly

Ref.	Part Number	Qty.	Description
1	145-2469	1	Frame ASM
2	110-9041	1	Step-Aluminum
3	127-2697-01	4	Bracket-Step
4	323-36	4	Screw-HH
5	119-4042	4	Nut-HF, NI
6	322-17	4	Screw-HH
7	119-4041	14	Nut-HF
8	95-9495	1	Cap
10	110-8972	1	Hook-Latch
11	110-9012	3	Caplug
12	110-9013	1	Caplug

Ref.	Part Number	Qty.	Description
13	32104-17	2	Screw-HWH
14	147-3550	1	Bumper ASM
14:2	2410-42	2	Cap-End
15	120-6274	4	Mount-Engine
16	145-2520	1	Trim-Brake Hose
17	3231-21	4	Screw-CARR
18	3234-29	8	Screw-HHF
19	3230-1	2	Bolt-CARR
20	108-7584-01	1	Plate-Guide, Rod
21	32128-21	4	Nut-HF Lock

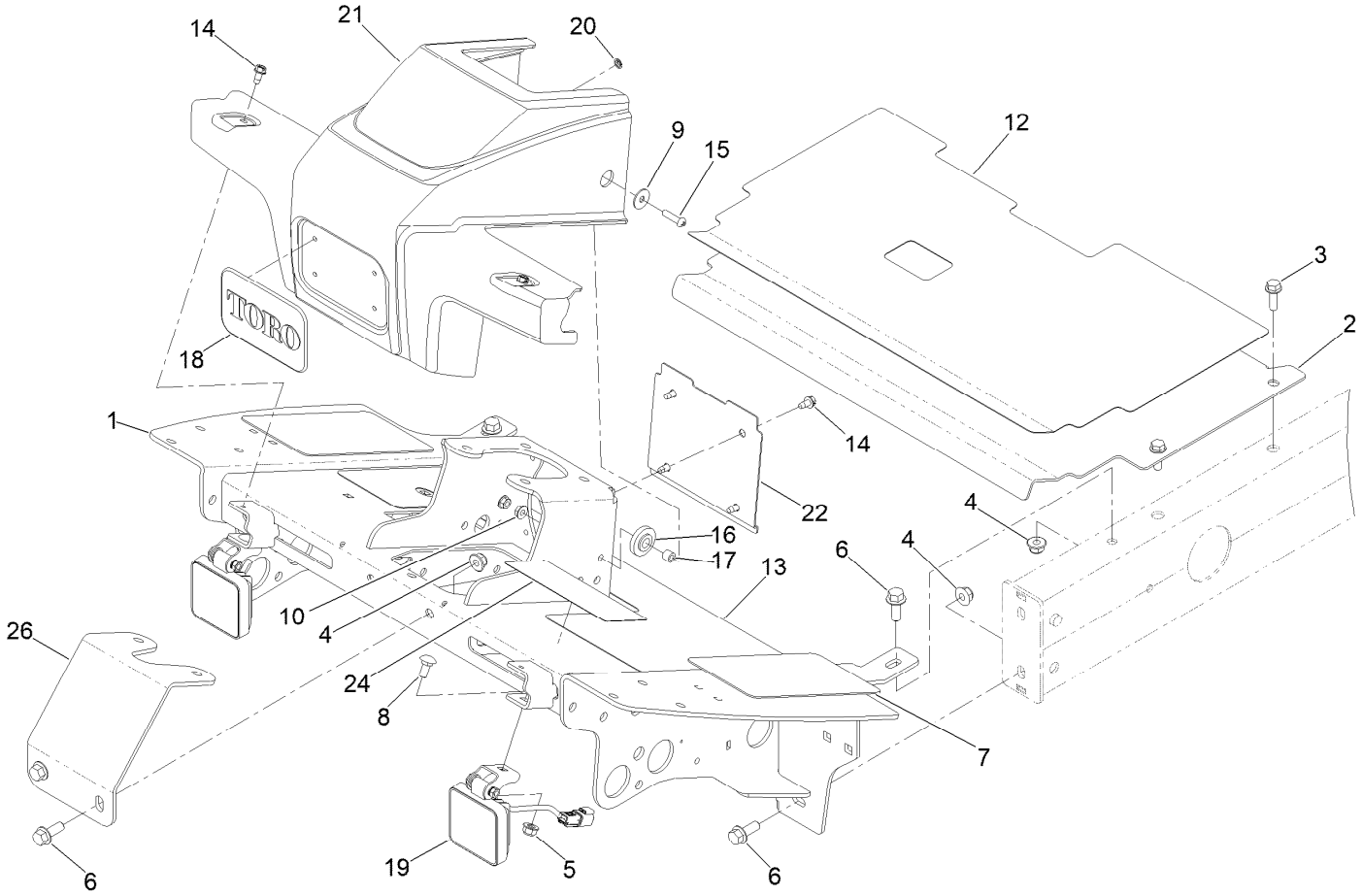

Platform and Shroud Assembly

Ref.	Part Number	Qty.	Description
1	145-2490-01	1	Platform ASM
2	115-8064-01	1	Plate-Floor
3	3234-17	4	Screw-HHF
4	119-4042	6	Nut-HF, NI
5	119-4041	2	Nut-HF
6	3234-11	6	Screw-HHF
7	125-2910	2	Tread-Floor, Side
8	3230-1	2	Bolt-CARR
9	87-6630	2	Washer-Plain
10	32128-33	2	Nut-HF
12	125-2911	1	Tread-Panel, Service
13	145-2510	1	Tread-Floor Board

Ref.	Part Number	Qty.	Description
14	32104-17	6	Screw-HWH
15	106-9518	2	Screw-PRH
16	240-11	2	Bushing-Flange
17	66-8010	2	Spacer
18	93-6028	1	Plate-Logo
19	145-2598	2	Light-Work, LED
20	138-6996	4	Nut-Push
21	110-0944	1	Shroud-Platform
22	110-0947-03	1	Plate-Cover
24	133-2930	1	Decal-Danger
26	110-8876-0P	1	Brace-Column

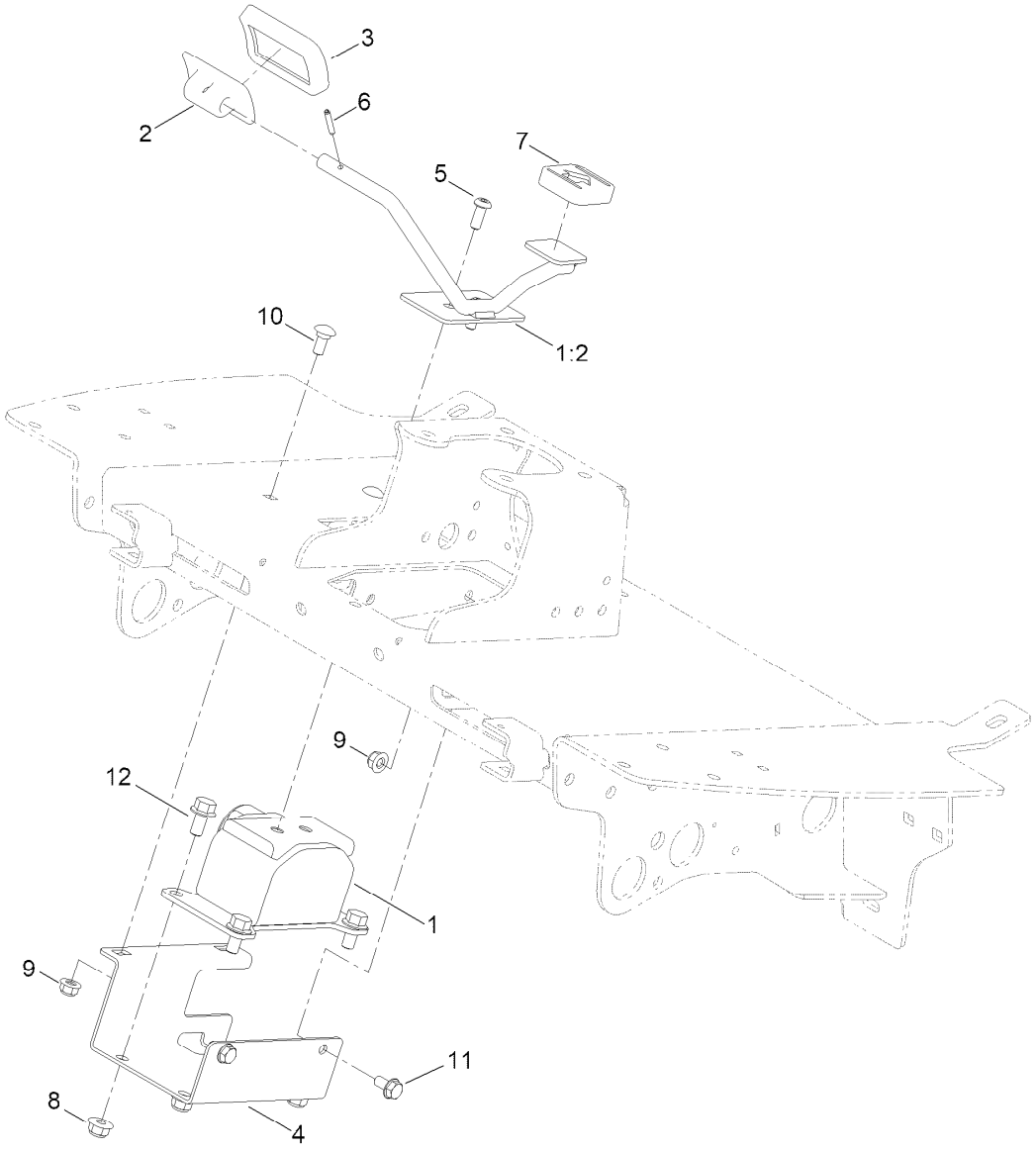

Pedal Assembly

Ref.	*Part Number*	*Qty.*	*Description*
1	145-2545	1	E-Pedal ASM
1:2	145-2521	1	Pedal ASM
2	117-9507	1	Pedal-Accelerator
3	74-9100	1	Pad-Pedal, Forward
4	145-2489-0P	1	Bracket-Pedal, Mount
5	3274-96	2	Screw-HSBH
6	32121-45	1	Pin-Spring
7	74-9110	1	Pad-Pedal, Reverse
8	119-4042	4	Nut-HF, NI
9	119-4041	4	Nut-HF
10	3230-1	2	Bolt-CARR
11	3234-7	2	Screw-HHF
12	3234-1	4	Screw-HHF

Steering Assembly

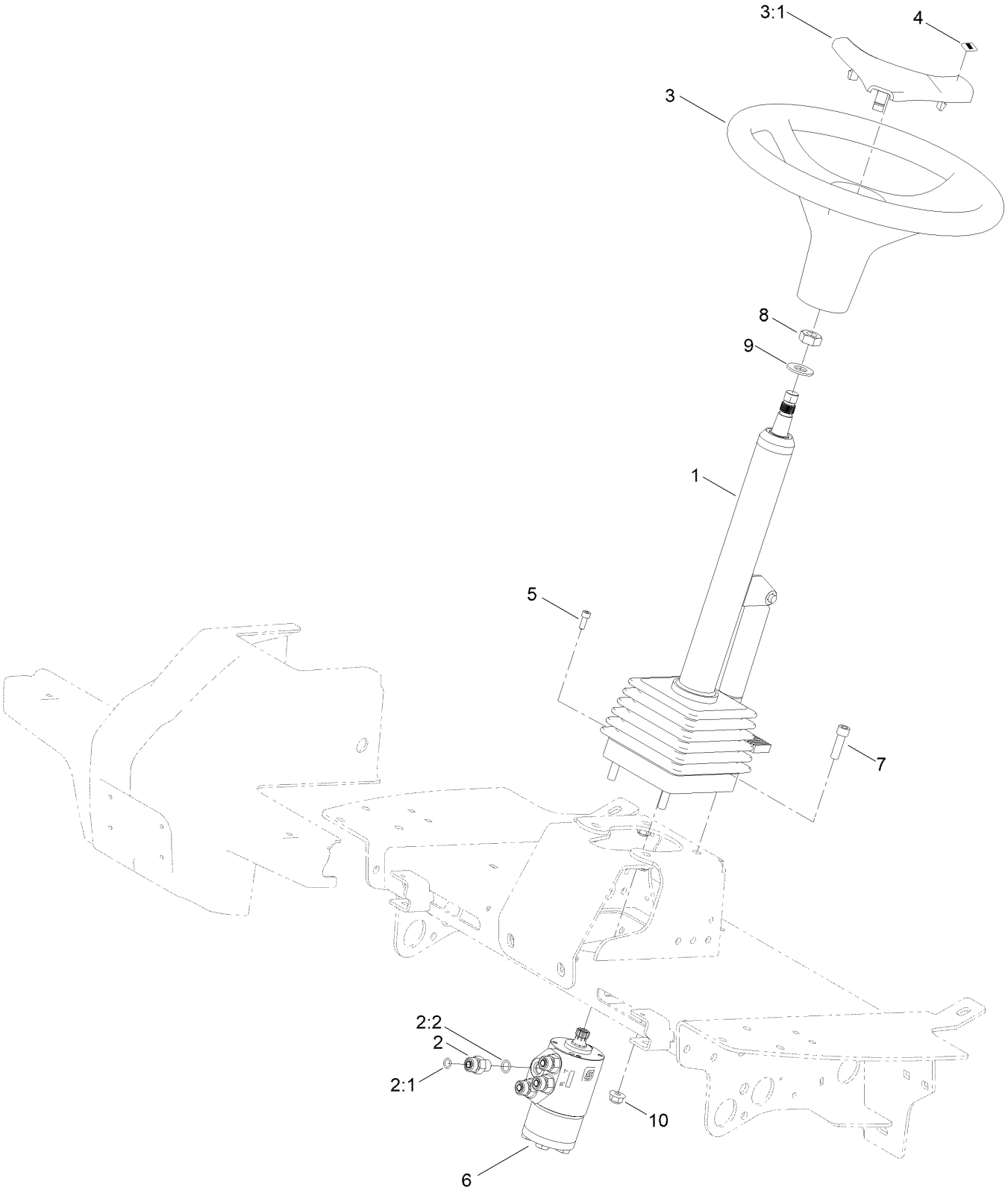

Steering Assembly (continued)

Ref.	Part Number	Qty.	Description
1	106-3622	1	Steering Tilt Column ASM
2	340-2	4	Fitting-Straight
2:1	237-22	1	O-Ring
2:2	237-42	1	O-Ring
3	98-1471	1	Wheel-Steering
3:1	98-1468	1	Cover-Wheel, Steering
4	98-1459	1	Decal
5	105-2409	4	Screw-HSH
6	106-3621	1	Steering Valve ASM
7	3274-1	4	Screw-HSH
8	3296-33	1	Nut-Lock, NI
9	3256-27	1	Washer-Flat
10	119-4042	4	Nut-HF, NI

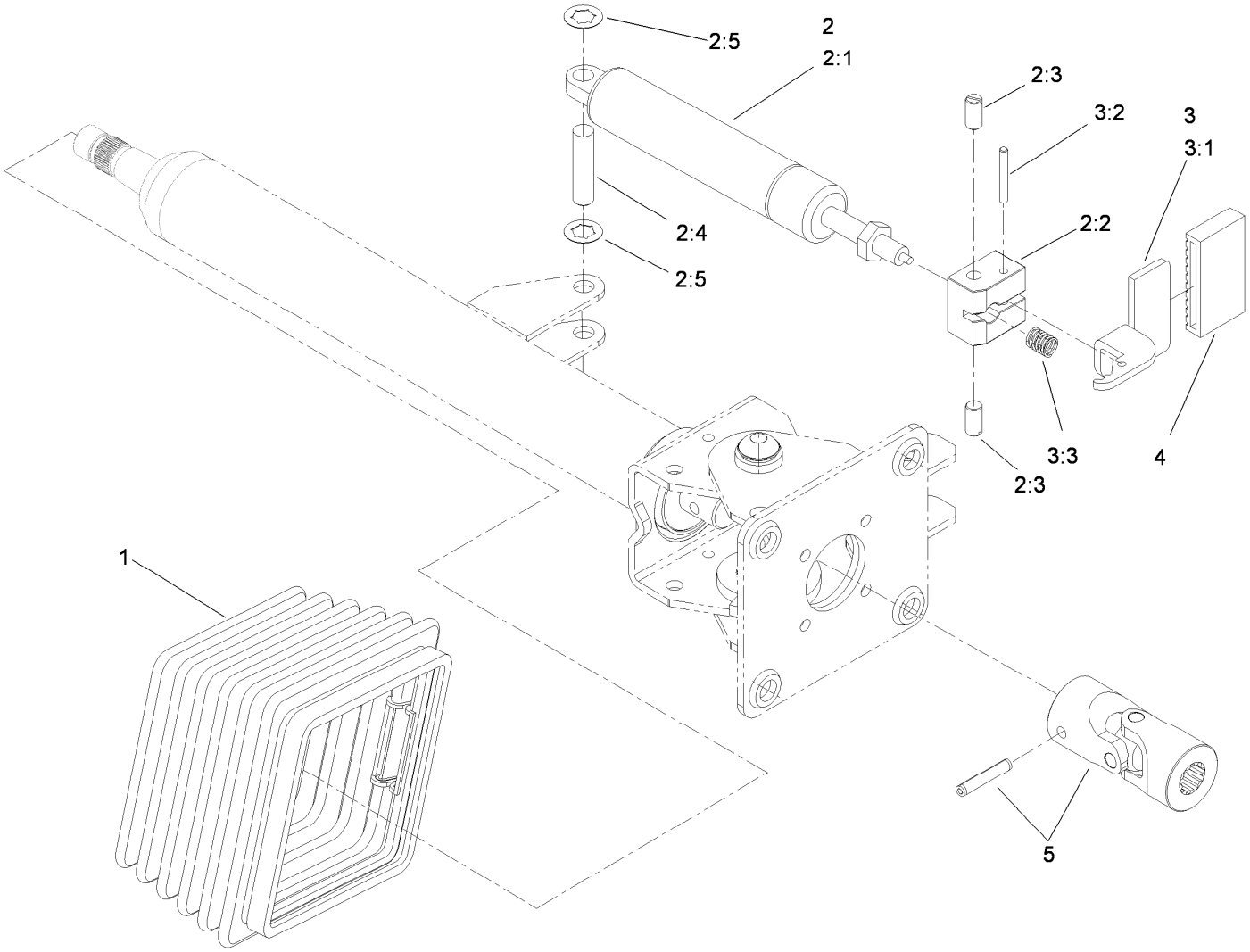

Steering Tilt Column Assembly No. 106-3622

Ref.	*Part Number*	*Qty.*	*Description*
1	110-6462	1	Bellows-Rubber
2	110-6463	1	Cylinder Service Kit
2:1		1	Cylinder-Gas ●
2:2		1	Block-Pedal ●
2:3		2	Bolt ●
2:4		1	Pin ●
2:5		2	Washer-Lock ●
3	110-6464	1	Pedal Service Kit
3:1		1	Pedal ●
3:2		1	Pin ●
3:3		1	Spring ●
4	110-6465	1	Cover-Pedal
5	120-6256	1	Universal Joint Kit

● Not serviced separately

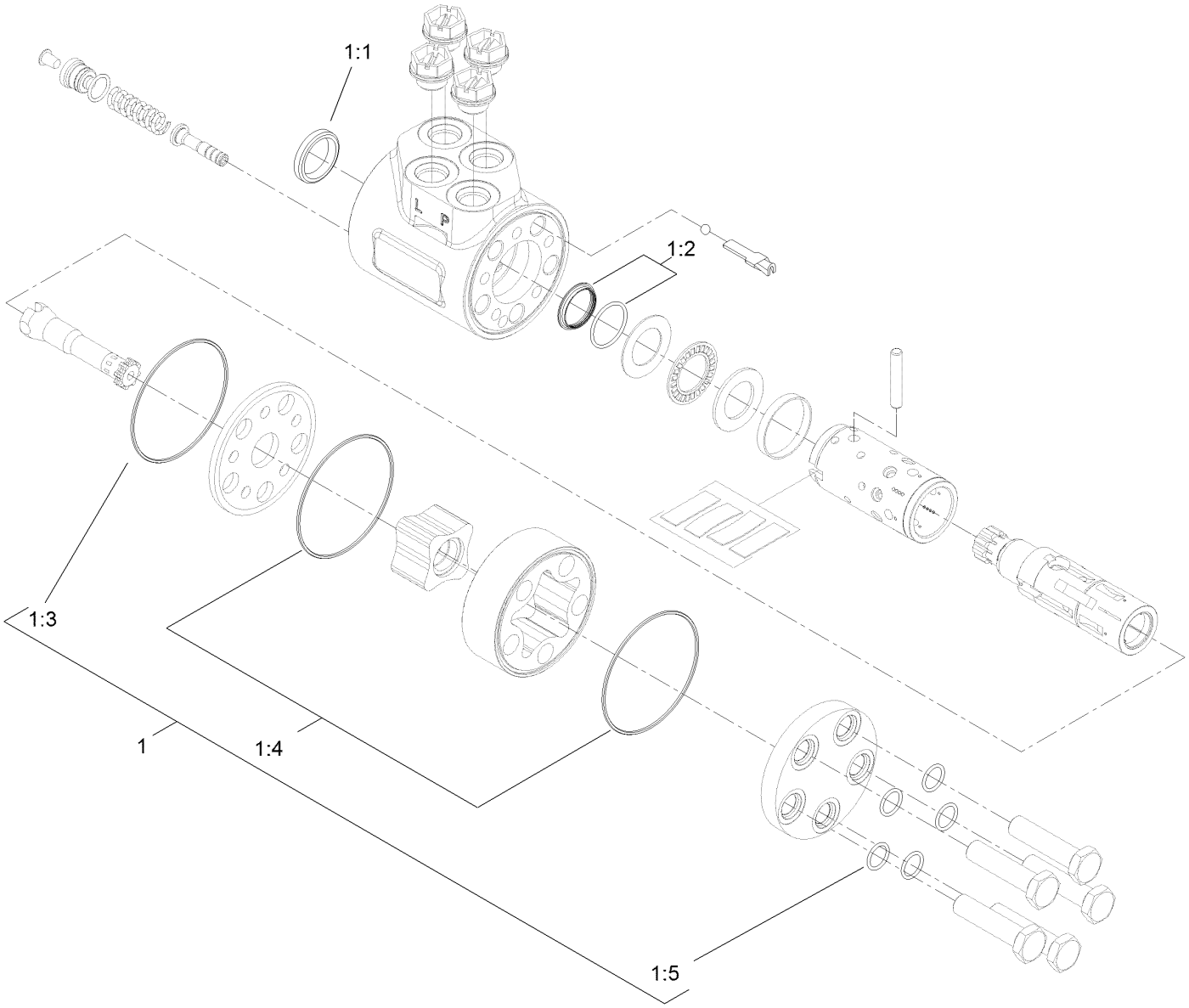

Steering Valve Assembly No. 106-3621

Ref.	*Part Number*	*Qty.*	*Description*
1	106-6716	1	Seal Kit
1:1		1	Ring-Seal, Dust ●
1:2		1	Seal-Shaft ●
1:3		1	O-Ring ●
1:4		2	O-Ring ●
1:5		5	O-Ring ●

● Not serviced separately

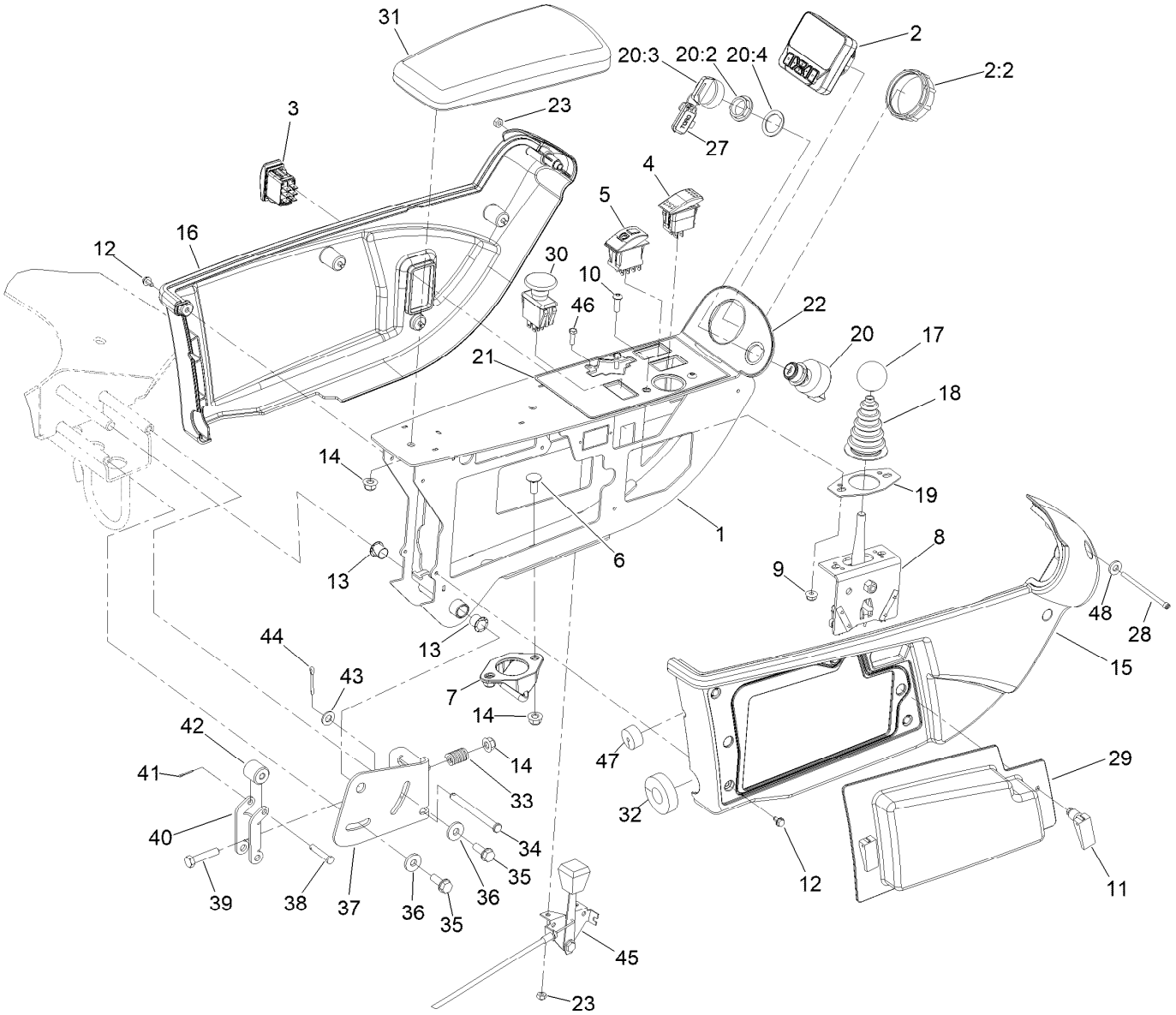

Control Console Assembly

Ref.	Part Number	Qty.	Description
1	145-2474-03	1	Frame-Arm, Control
2	161-1700	1	Display-LCD
2:2	161-1723	1	Nut-Display
3	95-8999	1	Switch-Rocker, On-None-On
4	114-3329	1	Switch-Rocker
5	111-2254	1	Switch-Rocker, On-None-On
6	137-3061	2	Bolt-CARR
7	125-1938	1	Latch
8	120-5280	1	Bracket-Joystick
9	104-7201	2	Nut-HF, NI
10	3274-69	2	Screw-HSBH
11	74-5950	2	Latch-Swell
12	104-2065	10	Screw-HWH
13	256-257	2	Bushing-Nyliner
14	119-4041	5	Nut-HF
15	108-7605	1	Cover-RH
16	108-7604	1	Cover-LH
17	233-42	1	Knob
18	93-5961	1	Boot-Lever

Ref.	Part Number	Qty.	Description
19	112-9181	1	Plate-Boot
20	106-5269	1	Ignition Switch ASM
20:2	108-8660	1	Nut-Mounting
20:3	106-5270	1	Ignition Key Set
20:4	108-8659	1	Washer-Backup
21	145-2484	1	Decal-Control Panel
22	120-4158	1	Decal-Console, Upper
23	3296-2	3	Nut-Lock, NI
27	99-8970	1	Key-Latch, Hood
28	161-8374	1	Screw-HSH
29	114-0446	1	Panel-Access
30	93-9999	1	Switch-PTO
31	108-7602	1	Rest-Arm
32	145-2594	1	Seal-Foam
33	110-5331	1	Spring-Compression
34	283-88	1	Pin-Clevis
35	32144-41	2	Screw-Taptite
36	4-2390	2	Washer-Flat
37	110-5313-03	1	Bracket-Retainer
38	283-73	1	Pin-Clevis
39	322-7	1	Screw-HH

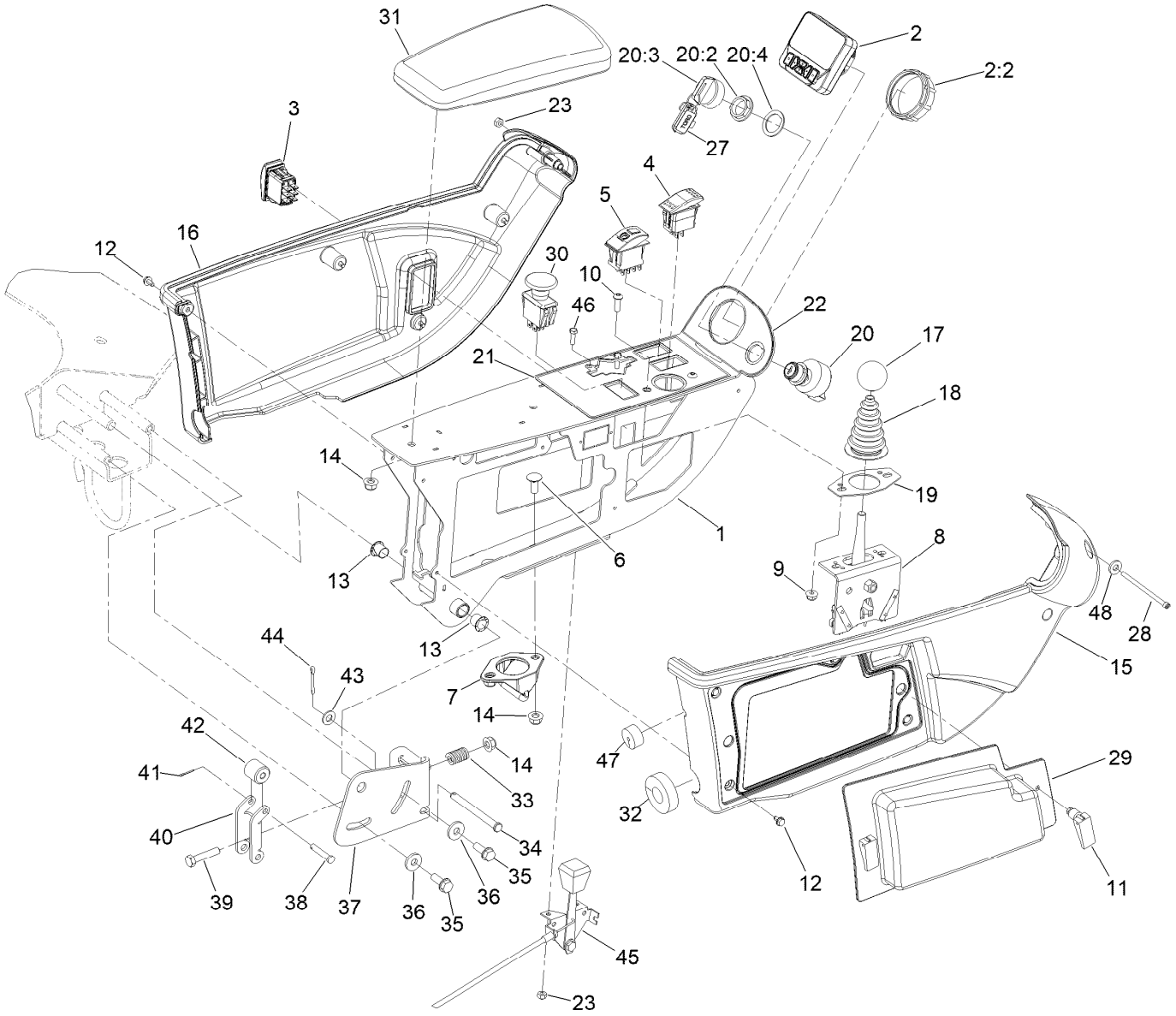

Control Console Assembly (continued)

Ref.	Part Number	Qty.	Description
40	110-5314	1	Latch
41	3272-1	1	Pin-Cotter
42	110-8856	1	Spacer
43	3256-23	1	Washer-Plain
44	3272-11	1	Pin-Cotter

Ref.	Part Number	Qty.	Description
45	133-2929	1	Control-Throttle
46	3290-134	2	Screw
47	110-8911	1	Seal-Foam
48	3256-51	1	Washer-Flat

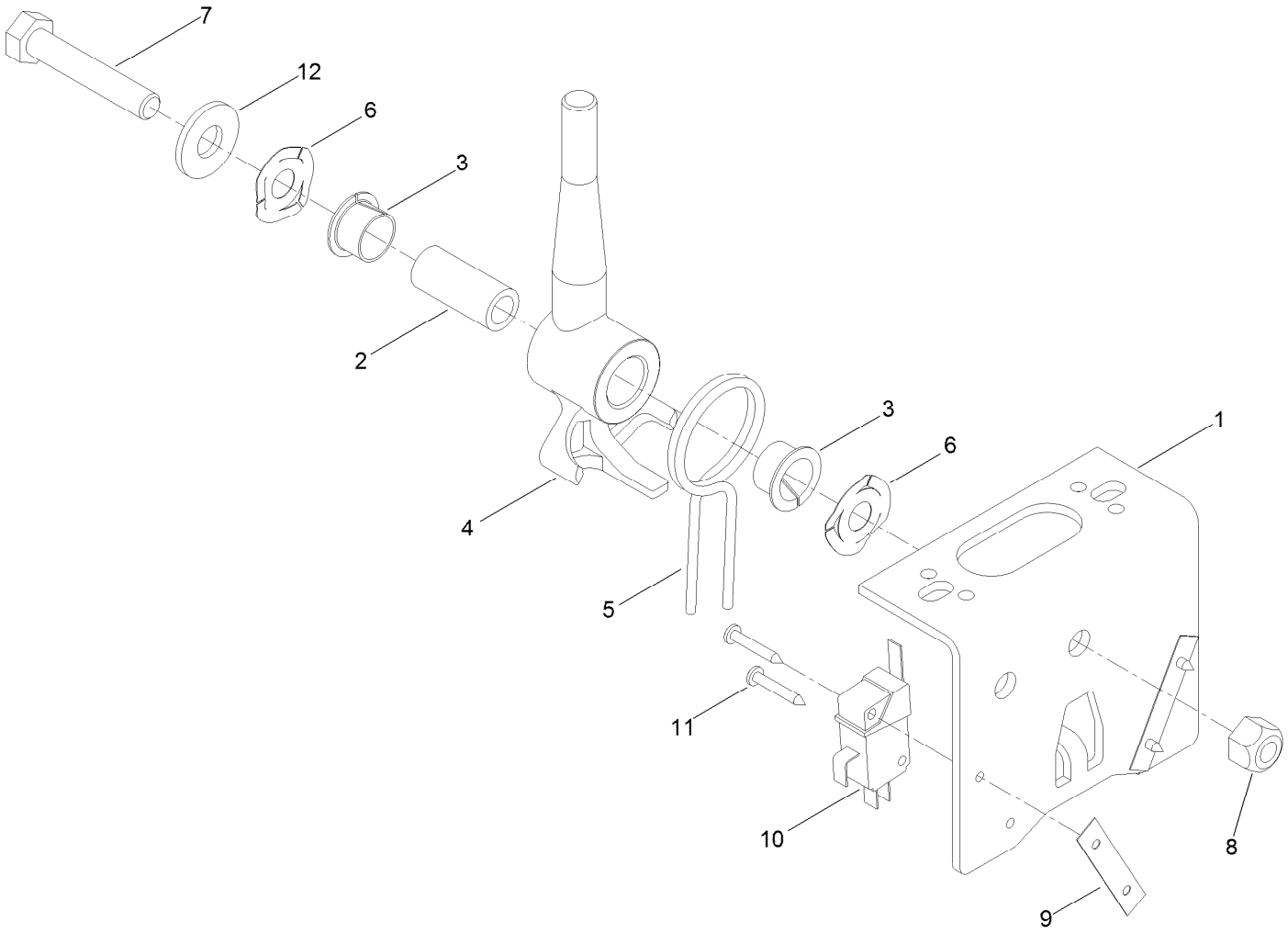

Joystick Bracket Assembly No. 120-5280

Ref.	*Part Number*	*Qty.*	*Description*
1	115-5357-03	1	Bracket-Joystick
2	106-4192	1	Spacer
3	93-5547	2	Bushing-Nylon
4	119-3540	1	Hub-Pivot, Joystick
5	105-8289	1	Spring-Torsion
6	106-4193	2	Washer-Finger, Spring
7	322-9	1	Screw-HH
8	3296-29	1	Nut-Lock, NI
9	3290-354	2	Nut-Speed
10	108-6496	2	Switch (W/Boot)
11	95-3003	4	Screw-PPHTF
12	3256-3	1	Washer-Flat

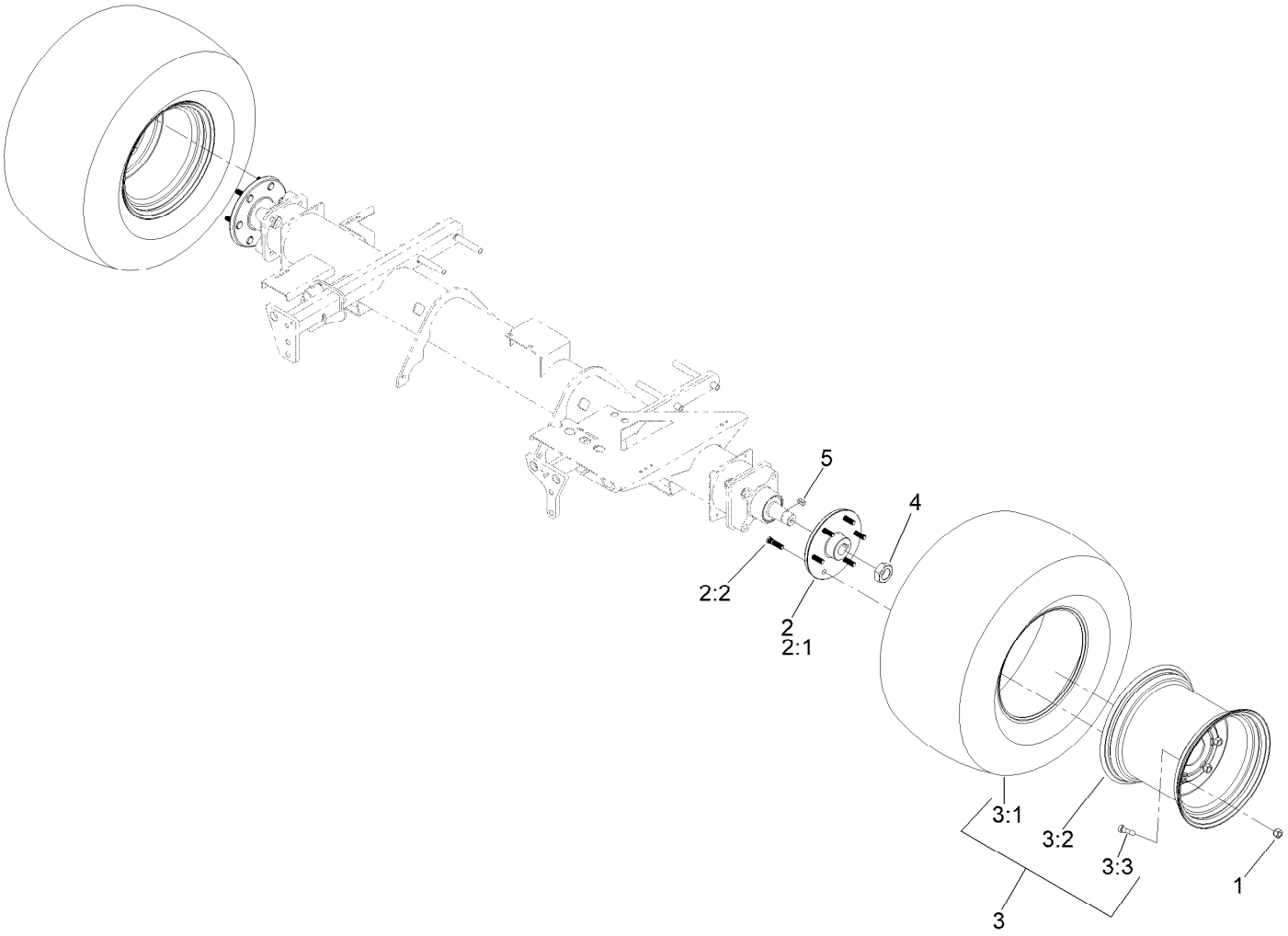

Front Axle Assembly

Ref.	*Part Number*	*Qty.*	*Description*
1	139-2564	12	Nut-Lug
2	144-2058	2	Hub ASM (1.50)
2:1	136-7971	1	Hub-Wheel
2:2	114-3918	6	Stud-Wheel
3	139-6048	2	Tire ASM
3:1	133-2724	1	Tire
3:2	139-6049	1	Wheel
3:3	232-27	1	Stem-Valve
4	117-3290	2	Nut-Hex
5	117-5198	2	Key-Square

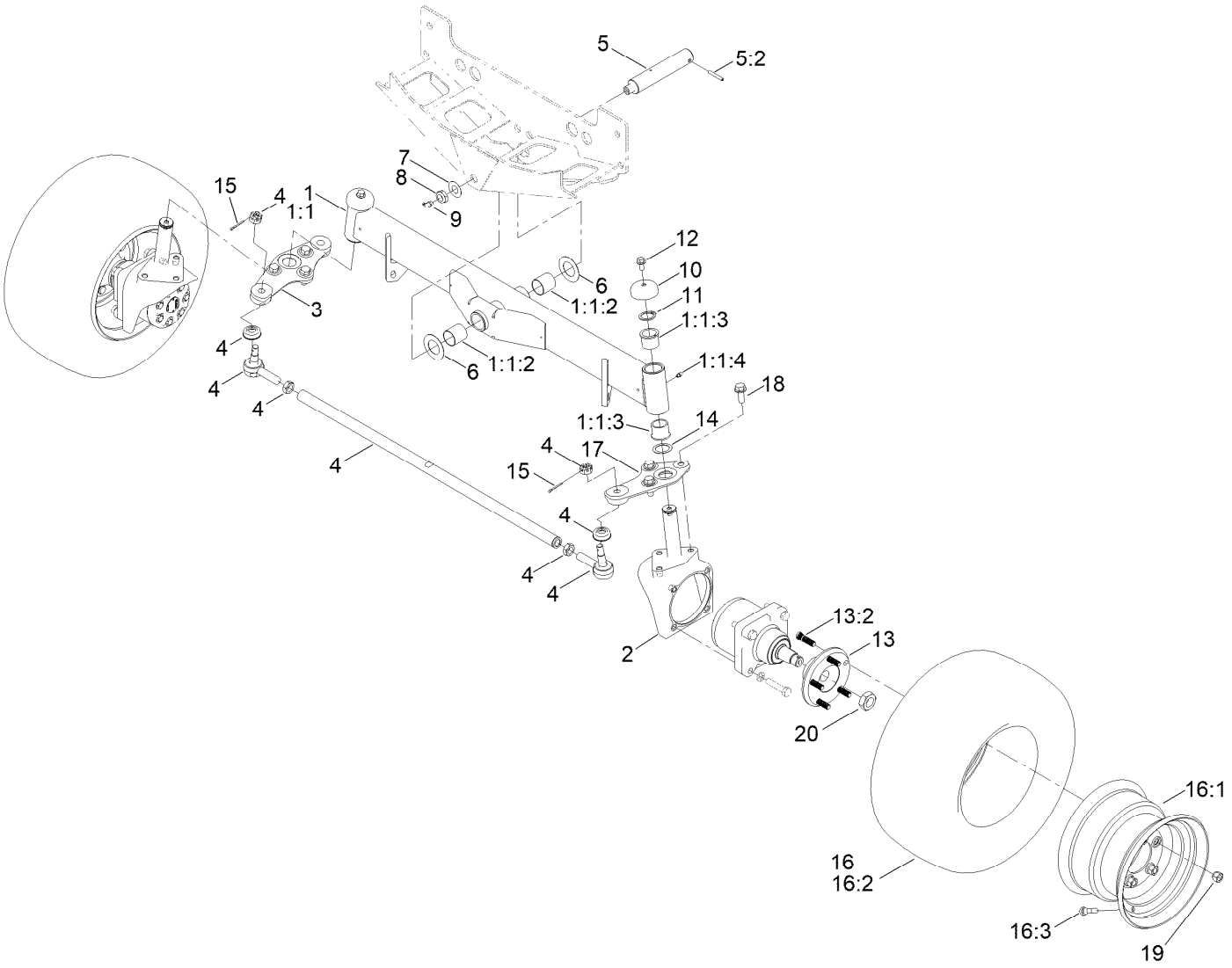

Rear Axle Assembly

Ref.	Part Number	Qty.	Description
1	107-4546-03	1	Axle ASM
1:1		1	Axle ●
1:1:2	99-6964	2	Bushing-Axle
1:1:3	104-0015	4	Bushing-Flange
1:1:4	302-5	2	Fitting-Grease
2	161-5128	2	Housing-Motor
3	140-3142	1	Link-Drag, RH
4	139-6029	1	Tie Rod ASM
5	140-6101	1	Pin ASM-Axle Pivot
5:2	32121-32	1	Pin-Roll
6	99-8432	2	Washer-Thrust
7	71-4540	1	Washer-Thrust
8	3296-15	1	Nut-Lock, NI
9	302-33	1	Fitting-Grease
10	69-8890	2	Cap-Spindle

Ref.	Part Number	Qty.	Description
11	32151-77	2	Ring-Retaining, External
12	3234-1	2	Screw-HHF
13	121-5633	2	Hub ASM
13:2	114-3918	5	Stud-Wheel
14	76-2980	2	Washer-Thrust
15	3272-12	2	Pin-Cotter
16	117-0281	2	Rim And Tire ASM
16:1	117-0280	1	Rim
16:2	117-5125	1	Tire
16:3	232-27	1	Stem-Valve
17	140-3144	1	Link-Drag, LH
18	3234-38	6	Screw-HHF
19	139-2564	10	Nut-Lug
20	26-3790	2	Nut-Lock

● Not serviced separately

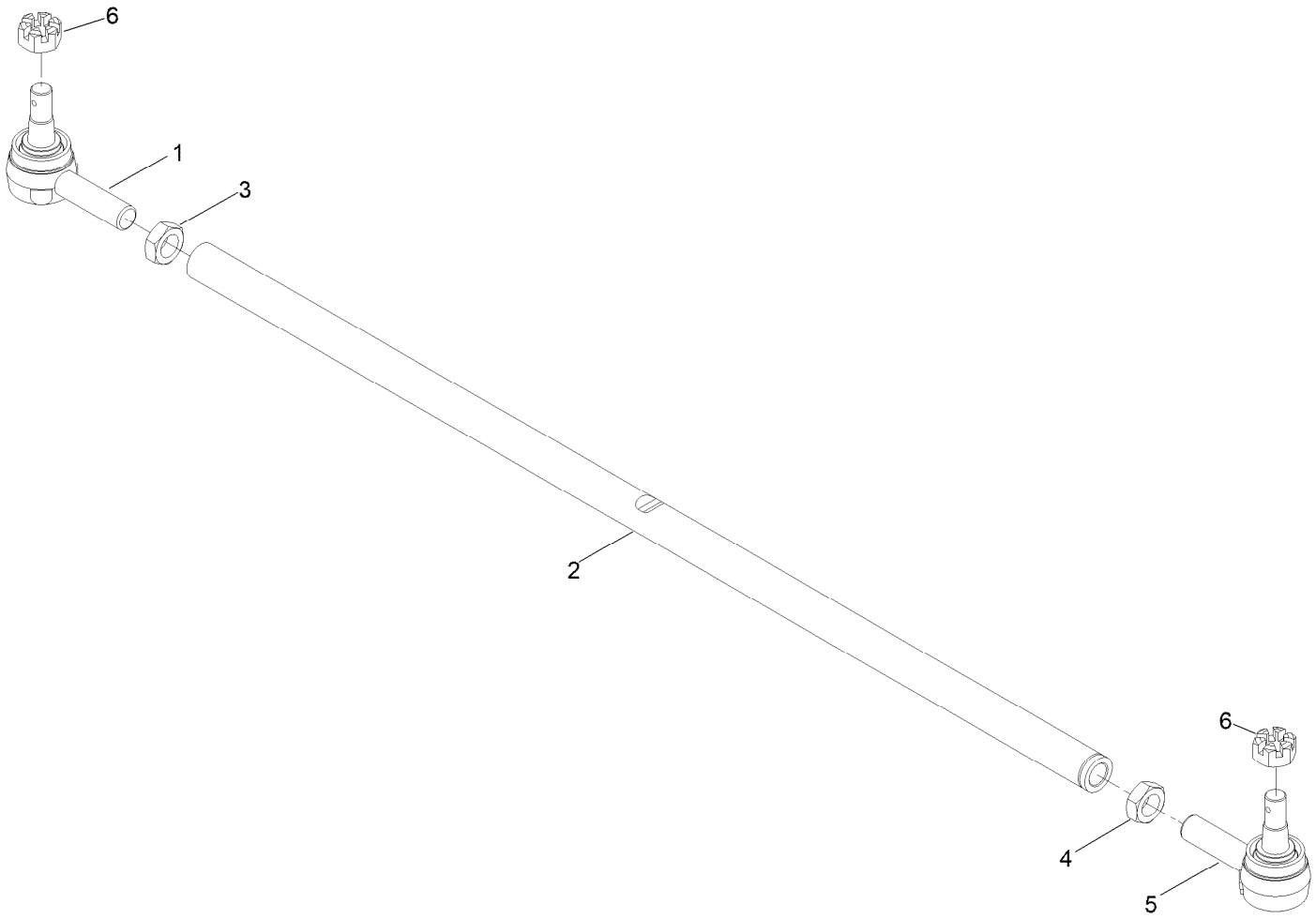

Tie Rod Assembly No. 139-6029

Ref.	*Part Number*	*Qty.*	*Description*
1	144-3901	1	End-Rod, Tie
2	139-6030	1	Rod-Tie
3	84-5300	1	Nut-Jam
4	110-5337	1	Nut-Jam
5	144-3902	1	End-Rod, Tie
6	140-6135	2	Nut-Hex, Slotted

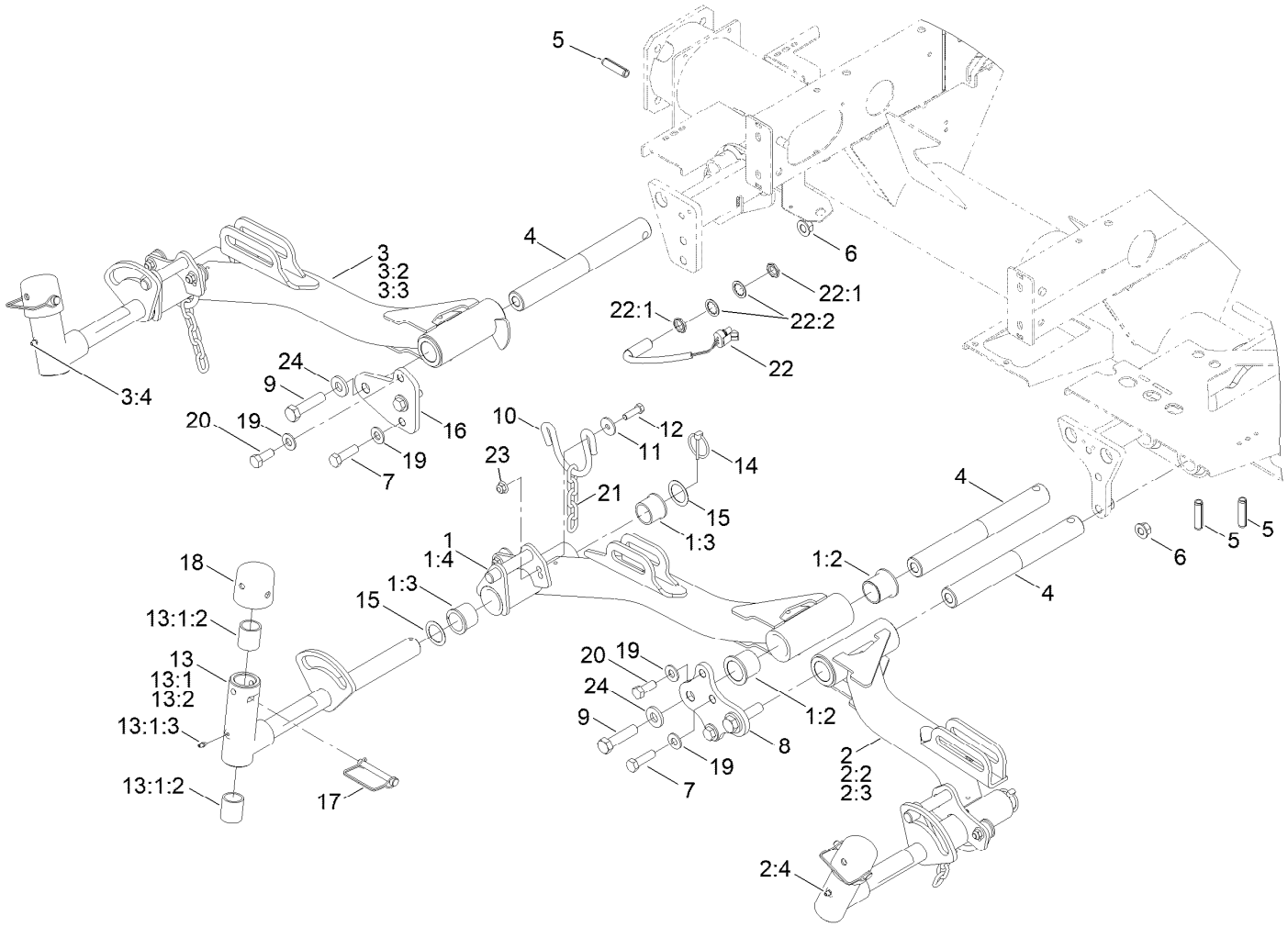

No. 1, 4 and 5 Lift Arm Hydraulic Assembly

Ref.	Part Number	Qty.	Description
1	133-2911	1	Lift Arm ASM #1
1:2	69-6470	2	Bushing-Caster
1:3	104-0015	2	Bushing-Flange
1:4	302-5	2	Fitting-Grease
2	133-2914	1	Lift Arm ASM #4
2:2	69-6470	2	Bushing-Caster
2:3	104-0015	2	Bushing-Flange
2:4	302-5	2	Fitting-Grease
3	133-2915	1	Lift Arm ASM #5
3:2	69-6470	2	Bushing-Caster
3:3	104-0015	2	Bushing-Flange
3:4	302-5	2	Fitting-Grease
4	117-0208	3	Shaft-Pivot, Liftarm
5	32121-122	3	Pin-Roll
6	139-1689	4	Nut-HF
7	325-7	4	Screw-HH
8	117-5154-01	1	Plate-Bridge 1 And 4
9	327-7	3	Screw-HH

Ref.	Part Number	Qty.	Description
10	110-0922	3	Hoop-Chain
11	63-8410	6	Washer
12	323-7	6	Screw-HH
13	138-1248	3	Pivot Yoke ASM
13:1		1	Yoke-Pivot ●
13:1:2	121-3187	2	Bushing
13:1:3	302-5	1	Fitting-Grease
13:2	110-9642	1	Decal-Warning
14	92-1298	3	Pin-Lynch
15	76-2980	6	Washer-Thrust
16	117-5153-01	1	Plate-Bridge 5
17	107-7400	3	Pin-Lynch
18	107-4027	3	Cap
19	87-7270	6	Washer-Thrust
20	325-5	2	Screw-HH
21	84-2451	3	Chain-Straight, 5 Link
22	115-5300	1	Proximity Switch ASM
22:1	117-3207	2	Nut-Hex

● Not serviced separately

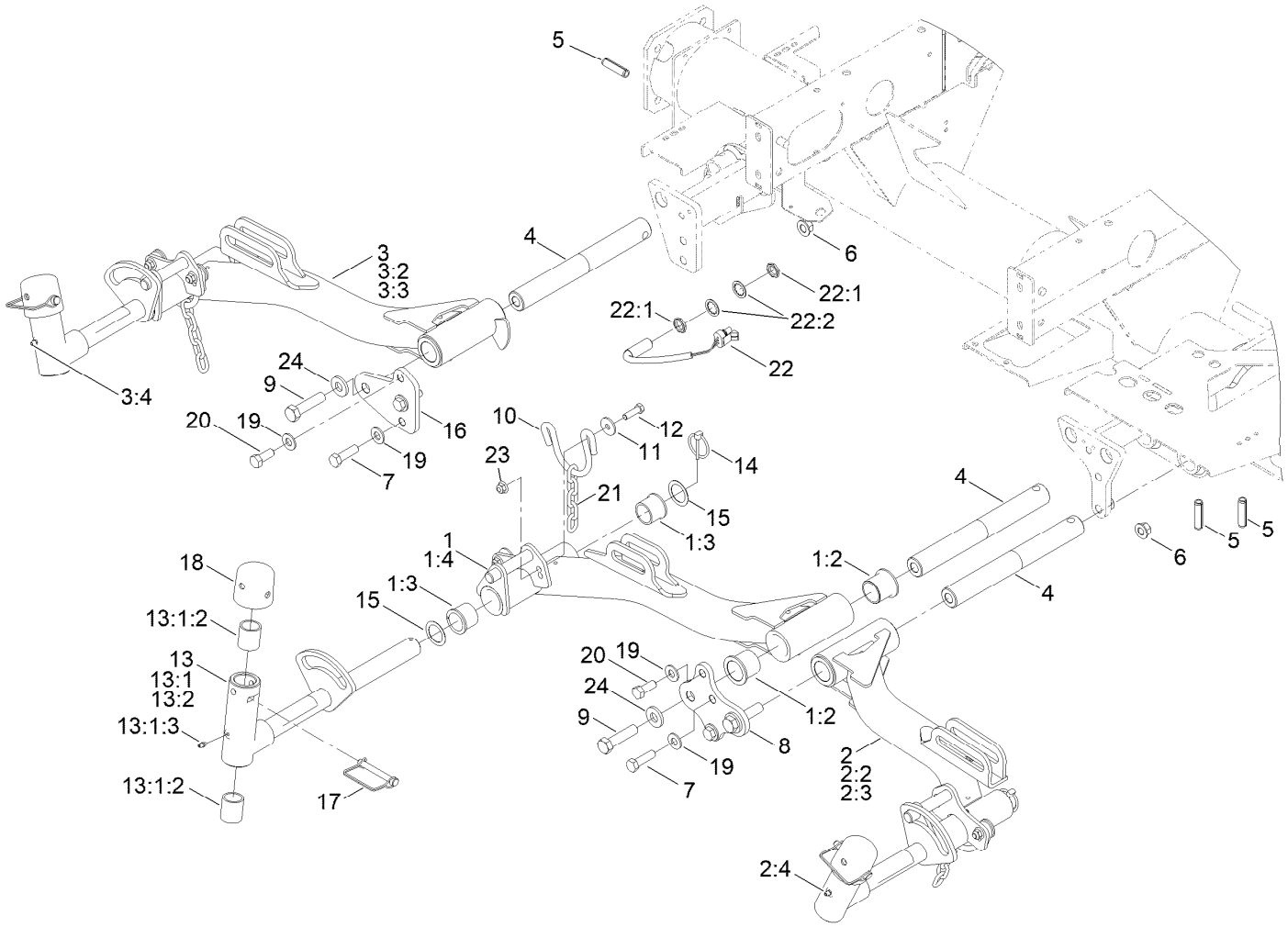

No. 1, 4 and 5 Lift Arm Hydraulic Assembly (continued)

Ref.	Part Number	Qty.	Description
22:2	117-3208	2	Washer-Lock, Internal Tooth

Ref.	Part Number	Qty.	Description
23	119-4042	6	Nut-HF, NI
24	99-7667	3	Washer-Flat

● Not serviced separately

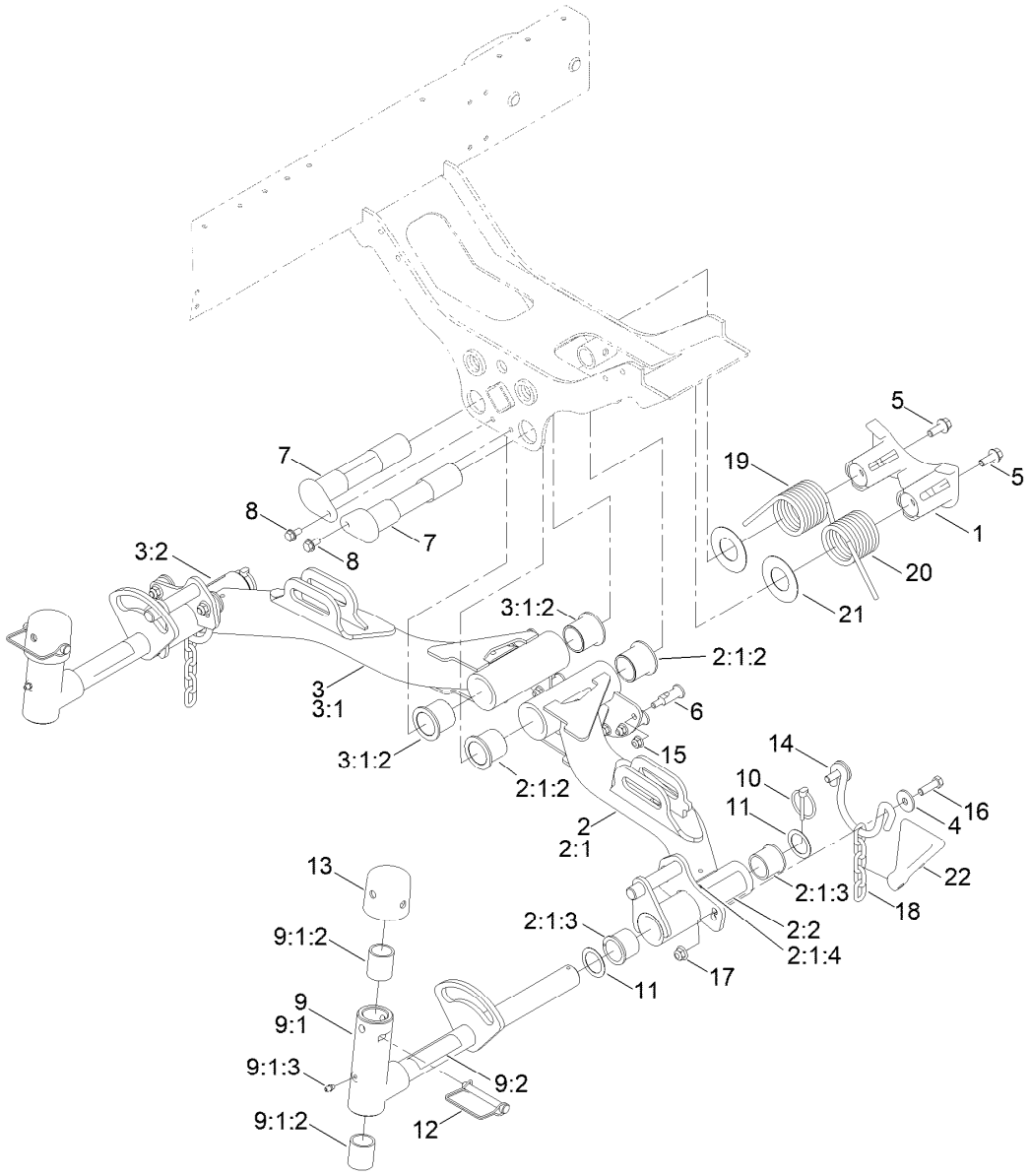

No. 2 and 3 Lift Arm Assembly

Ref.	Part Number	Qty.	Description
1	125-2018	1	Housing
2	136-8002	1	Lift Arm #2
2:1		1	Lift Arm ASM #2 ■
2:1:2	69-6470	2	Bushing-Caster
2:1:3	104-0015	2	Bushing-Flange
2:1:4	302-5	2	Fitting-Grease
2:2	93-6696	1	Decal-Warning
3	136-8003	1	Lift Arm #3
3:1		1	Lift Arm ASM #3 ■
3:1:2	69-6470	2	Bushing-Caster
3:1:3	104-0015	2	Bushing-Flange ●
3:1:4	302-5	2	Fitting-Grease ●
3:2	93-6696	1	Decal-Warning
4	63-8410	4	Washer
5	3234-11	2	Screw-HHF
6	120-6283	6	Stud-Shouldered
7	125-2037	2	Shaft
8	32144-14	2	Screw-HWHTF

Ref.	Part Number	Qty.	Description
9	138-1248	2	Pivot Yoke ASM
9:1		1	Yoke-Pivot ■
9:1:2	121-3187	2	Bushing
9:1:3	302-5	1	Fitting-Grease
9:2	110-9642	1	Decal-Warning
10	92-1298	2	Pin-Lynch
11	76-2980	4	Washer-Thrust
12	107-7400	2	Pin-Lynch
13	107-4027	2	Cap
14	110-0922	2	Hoop-Chain
15	119-4041	6	Nut-HF
16	323-7	4	Screw-HH
17	119-4042	4	Nut-HF, NI
18	84-2451	2	Chain-Straight, 5 Link
19	99-5608-03	1	Spring-Torsion, RH
20	99-5609-03	1	Spring-Torsion, LH
21	110-5345	2	Washer
22	119-8010-03	1	Kickstand

● Not illustrated

■ Not serviced separately

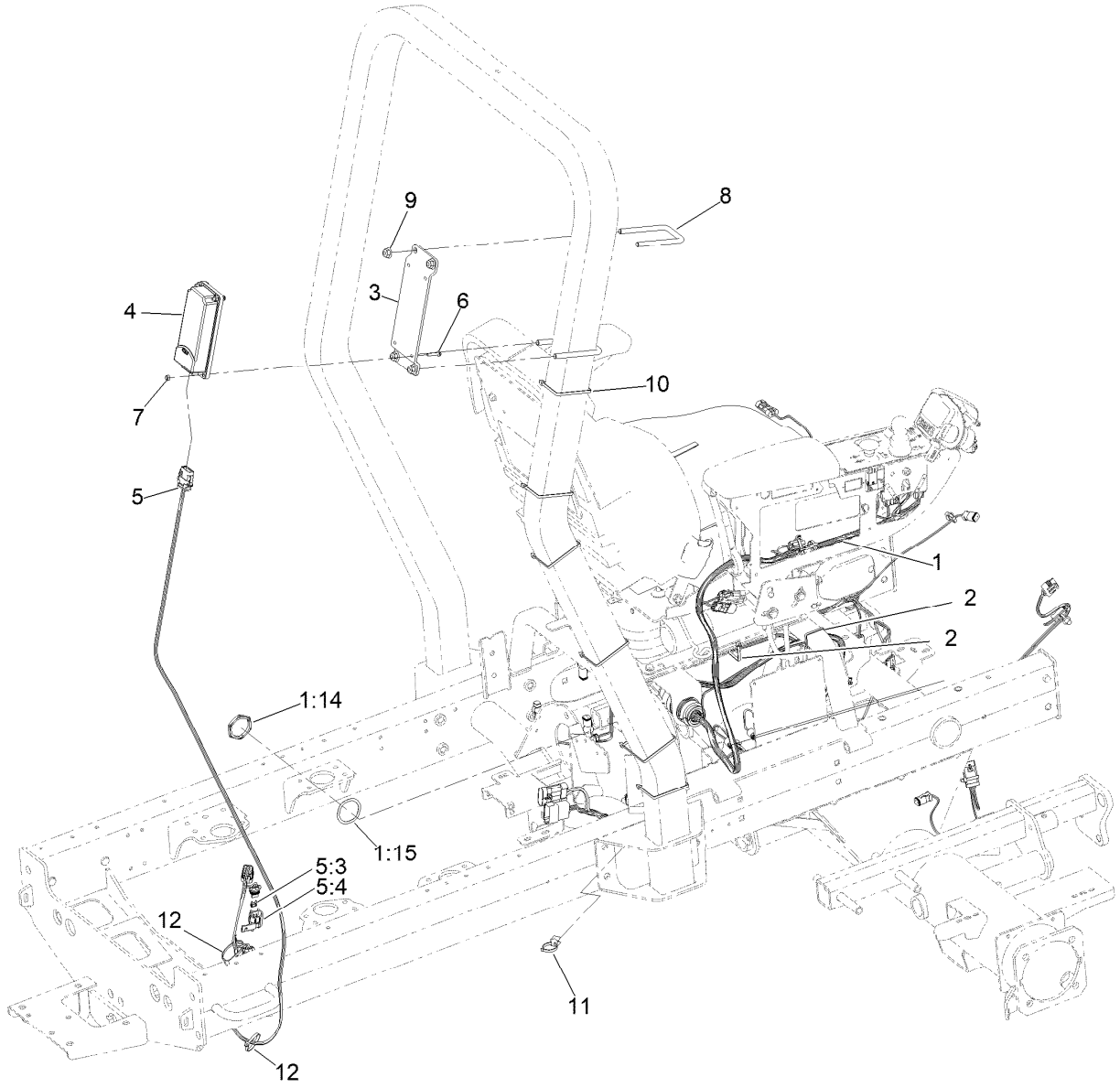

Seat and Control Arm Wiring Harness Assembly

Ref.	*Part Number*	*Qty.*	*Description*
1	122-2126	1	Harness-Wire, Seat
1:14	32180-135	1	Nut-Connector
1:15	32180-143	1	Washer-Lock
2	3290-378	2	Tie-Cable
3	161-8398-03	1	Bracket-Hmu Mouting
4	161-9001	1	Gateway-Telematics
5	122-2163	1	Harness-Wire
5:3	121-8861	1	Fuse-Mini Blade, 2 Amp
5:4	32180-101	1	Cover-Fuse, Single
6	131-6456	4	Screw-HWH
7	3296-2	4	Nut-Lock, NI
8	138-8991	2	U-Bolt-Sq
9	119-4042	4	Nut-HF, NI
10	3290-379	6	Tie-Cable
11	32180-078	1	Clip-Edge
12	3290-378	2	Tie-Cable

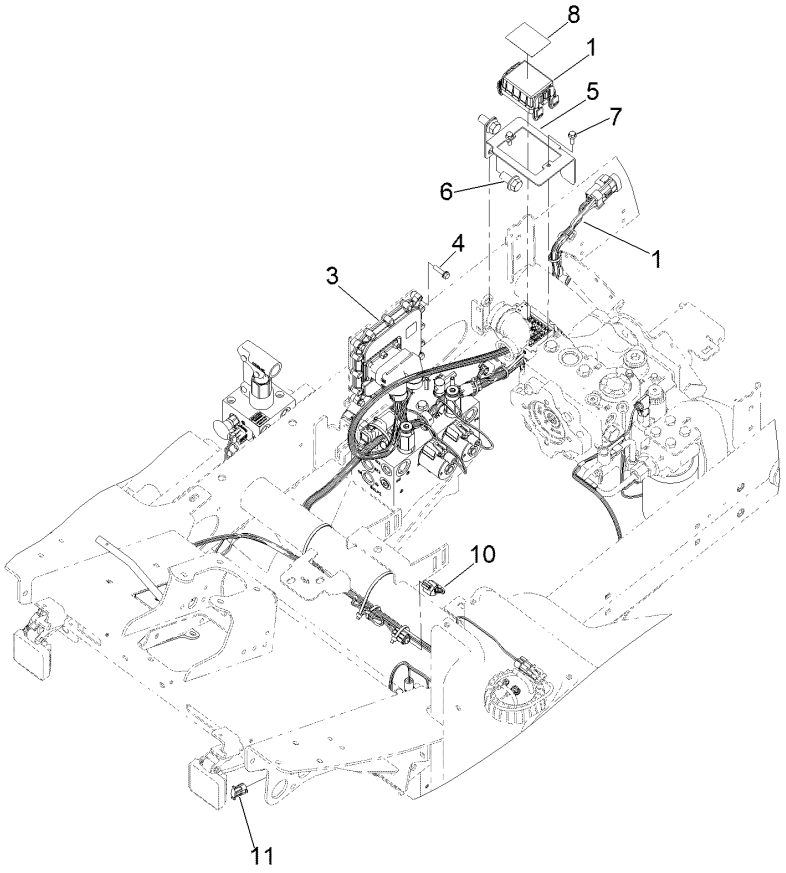

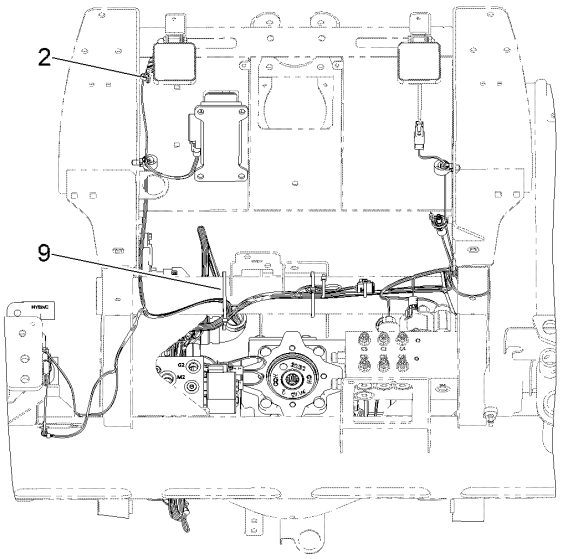

Main Wiring Harness Assembly

Ref.	*Part Number*	*Qty.*	*Description*
1	122-2912	1	Harness-Wire, Main
2	3290-378	1	Tie-Cable
3	127-2770	1	Controller
4	32144-86	4	Screw-HWHTF
5	145-2506-0P	1	Bracket-Pdm [primed]
6	3234-6	2	Screw-HHF
7	33103-020	2	Screw-HHF
8	145-2519	1	Decal-Fuses
9	3290-379	3	Tie-Cable
10	32180-089	1	Cap-Plug, 3 Way
11	32180-056	1	Cap

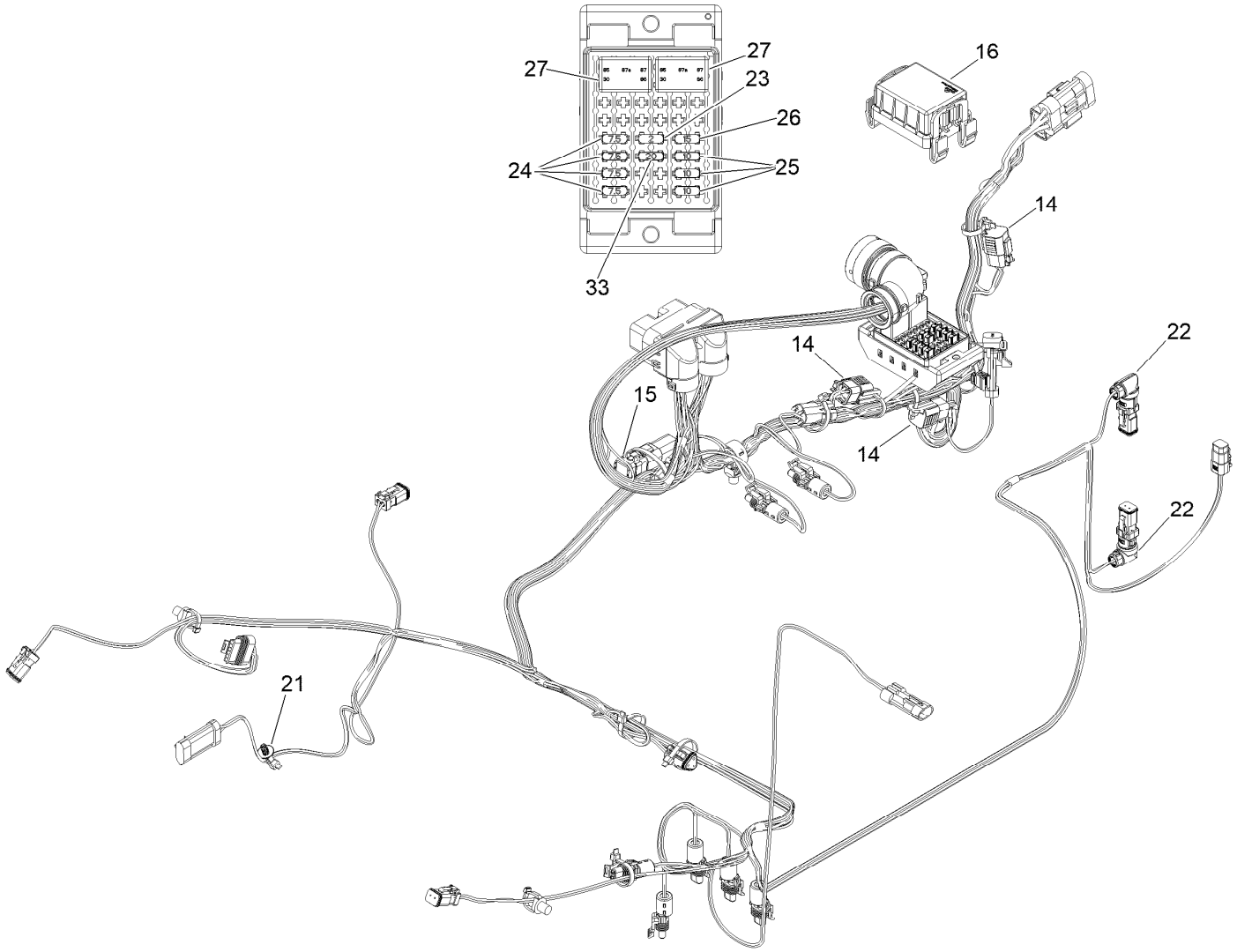

Wire Harness Assembly No. 122-2912

Ref.	*Part Number*	*Qty.*	*Description*
14	32180-156	3	Cap-Plug, 6 Way
15	122-1131	1	Conn, Capacitor-Sealed
16	32180-471	1	Cover-Chief, Bric
21	32180-400	1	Clip-Tie, Fir Tree W/Tie, 5MM/.196" Hole
22	32180-060	2	Backshell-Harnessflex, Dt06-2S 90 Degree
23	121-8861	1	Fuse-Mini Blade, 2 Amp
24	121-8865	4	Fuse-Mini Blade, 7.5 Amp
25	121-8866	3	Fuse-Mini Blade, 10 Amp
26	121-8867	1	Fuse-Mini Blade, 15 Amp
27	122-0368	2	Relay-280 ISO
33	121-8868	1	Fuse-Mini Blade, 20 Amp

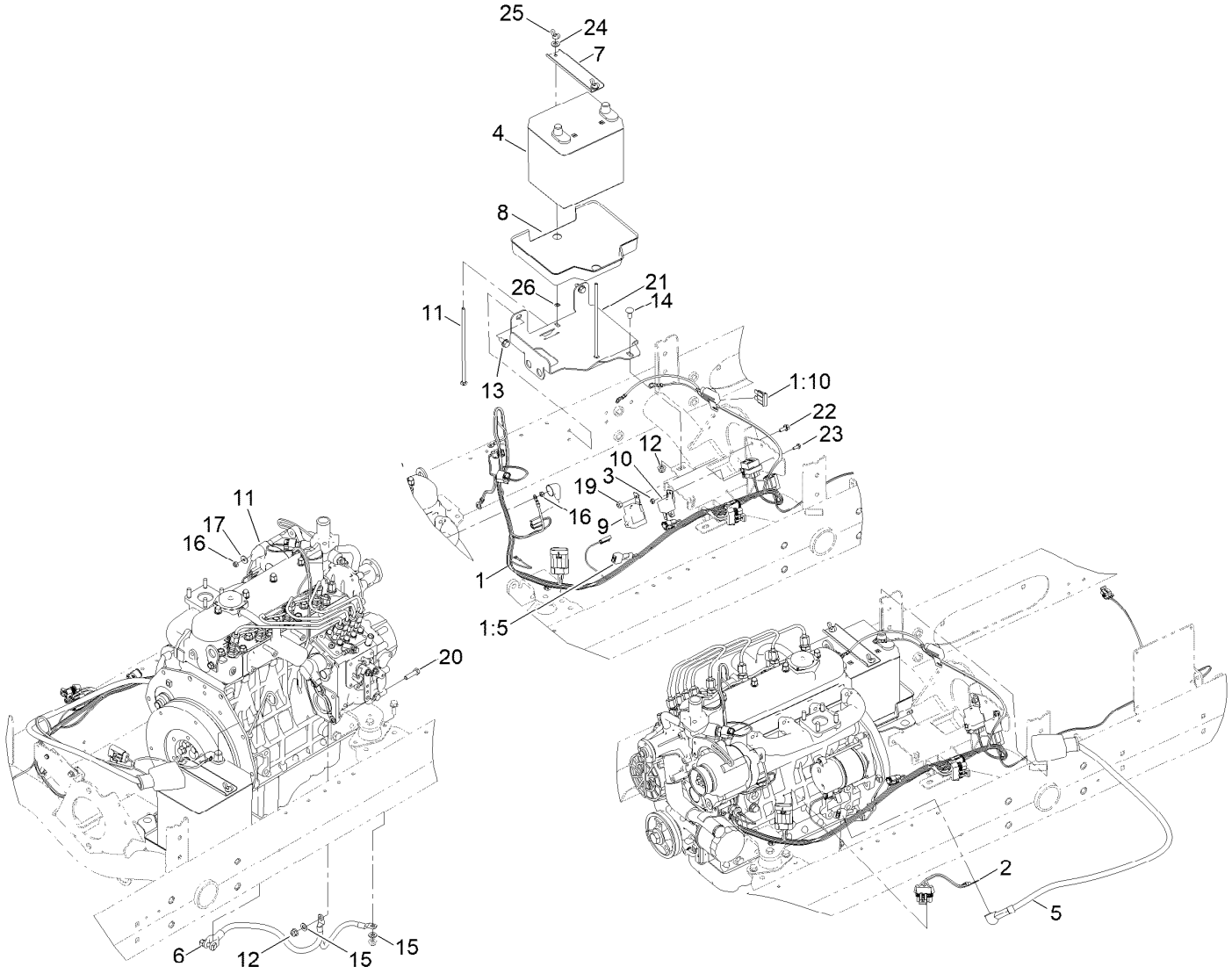

Battery and Engine Wiring Assembly

Ref.	Part Number	Qty.	Description
1	122-2599	1	Harness-Wire, Engine
1:5	100-4918	1	Diode
1:10	109101	1	Fuse-Blade, 20 Amp
2	99-3441	1	Harness-Wire, Fusible Link
3	3296-2	1	Nut-Lock, NI
4	161-6891	1	Battery-Wet,12V,540 CCA
5	108-1802	1	Cable-Battery, Positive
6	110-8813	1	Cable-Battery, Negative
7	163-3515-0P	1	Channel-Clamp, Battery
8	163-3526	1	Tray-Battery
9	99-7430	1	Relay-Mini
10	99-7435	1	Relay
11	137-8106	1	Screw-CARR
12	119-4041	2	Nut-HF

Ref.	Part Number	Qty.	Description
13	32104-32	2	Screw-HWH
14	3230-1	1	Bolt-CARR
15	120-9683	2	Washer-Plain
16	115-7373	1	Nut-Lock
17	3256-78	1	Washer-Flat
19	3296-42	1	Nut-Lock, NI
20	322-6	1	Screw-HH
21	163-3525-01	1	Bracket-Battery, Row
22	3234-33	1	Screw-HHF
23	3290-321	1	Screw-HWH
24	3256-23	2	Washer-Plain
25	32103-22	2	Nut-Wing
26	32115-15	2	Nut-Push

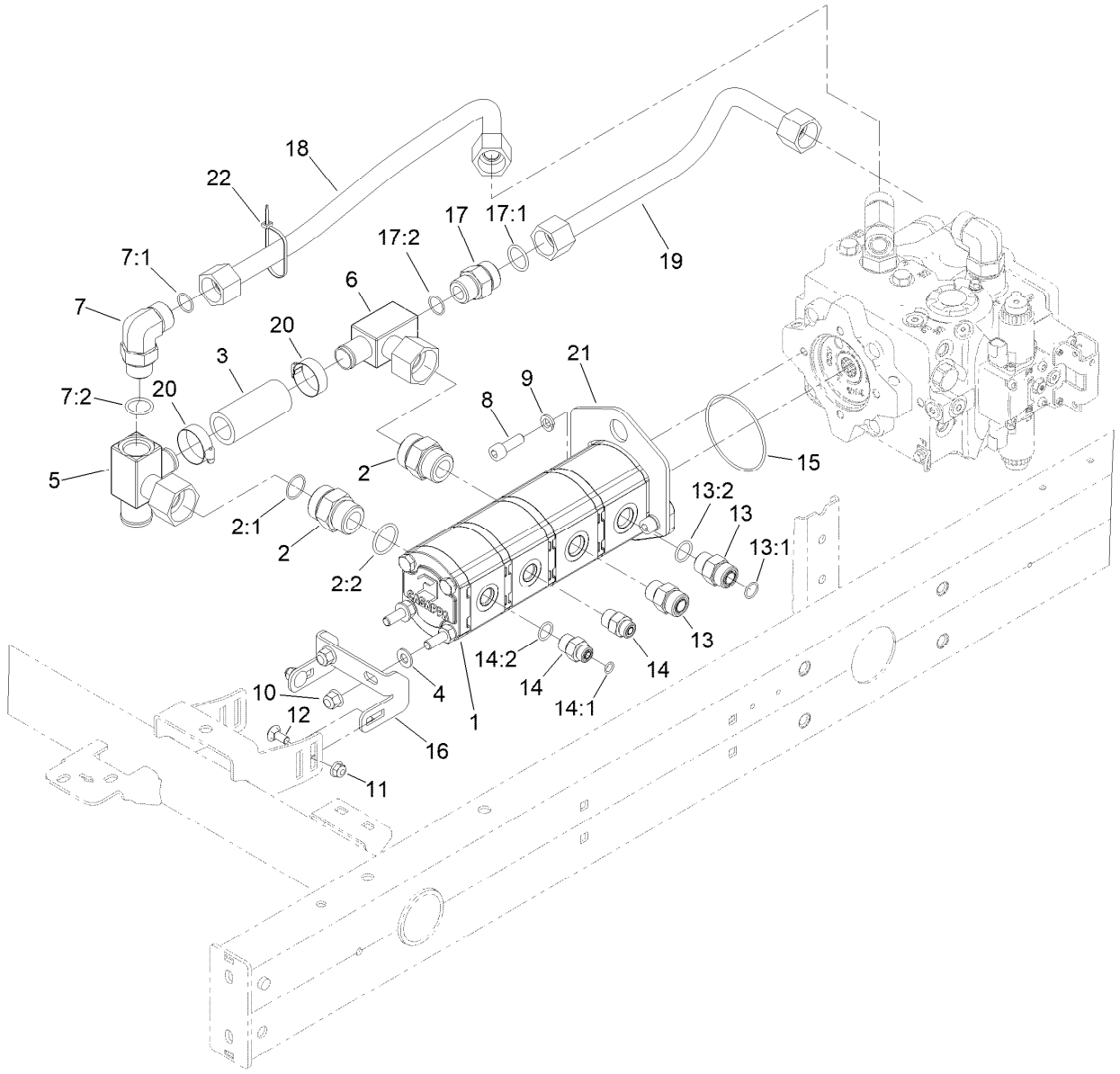

Gear Pump Assembly

Ref.	Part Number	Qty.	Description
1	107-4547	1	Gear Pump ASM
2	104-3797	2	Fitting-Straight
2:1	237-146	1	O-Ring
2:2	340-65	1	O-Ring
3	144-2092	1	Hose-Formed
4	3256-24	2	Washer-Plain
5	145-2570	1	Manifold-Tube
6	144-2093	1	Manifold-Tube
7	340-142	1	Fitting-Elbow, 90 DEG
7:1	237-58	1	O-Ring
7:2	237-81	1	O-Ring
8	ST80801	2	Screw-HSH
9	48-9590	2	Washer-Lock
10	103-9511	2	Nut-Flg
11	119-4041	2	Nut-HF
12	3230-1	2	Bolt-CARR

Ref.	Part Number	Qty.	Description
13	340-7	2	Fitting-Straight
13:1	237-65	1	O-Ring
13:2	237-80	1	O-Ring
14	340-3	2	Fitting-Straight
14:1	237-22	1	O-Ring
14:2	237-79	1	O-Ring
15	237-161	1	O-Ring
16	133-2946-0P	1	Brkt-Gear Pump
17	340-9	1	Fitting-STR
17:1	237-58	1	O-Ring
17:2	237-81	1	O-Ring
18	145-2561	1	Tube ASM-Hydraulic
19	145-2454	1	Tube ASM-Hydraulic
20	2412-34	2	Clamp-Hose
21	145-2548-0P	1	Bracket-Lift, Pump
22	3290-378	1	Tie-Cable

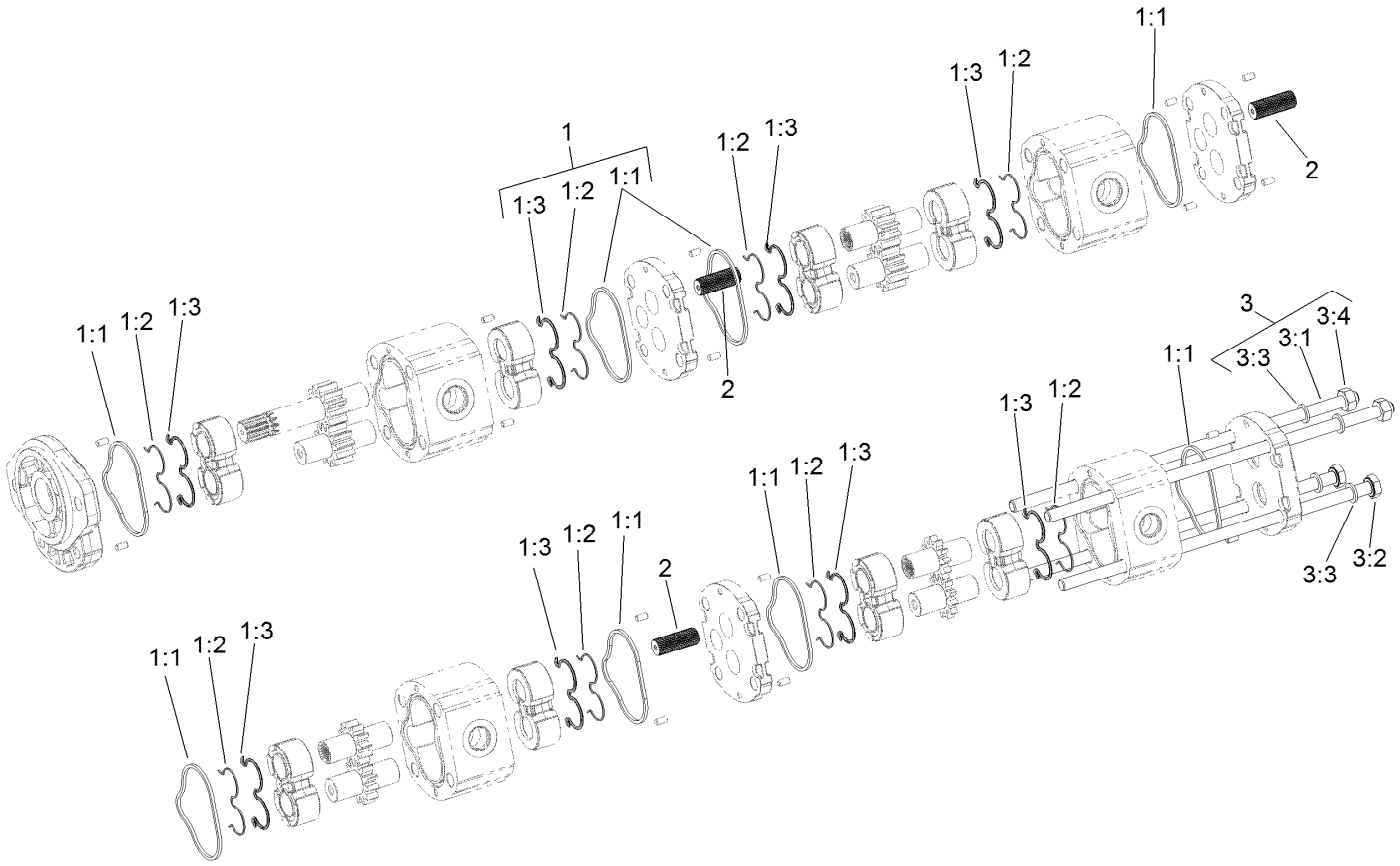

Gear Pump Assembly No. 107-4547

Ref.	*Part Number*	*Qty.*	*Description*
1	108-4595	1	Seal Kit
1:1		8	Seal ●
1:2		8	Seal ●
1:3		8	Ring-Back Up ●
2	120-6284	3	Hub-Connecting
3	125-8760	1	Kit-Bolt
3:1		2	Bolt-Stud ●
3:2		2	Screw ●
3:3		4	Washer ●
3:4		2	Nut ●

● Not serviced separately

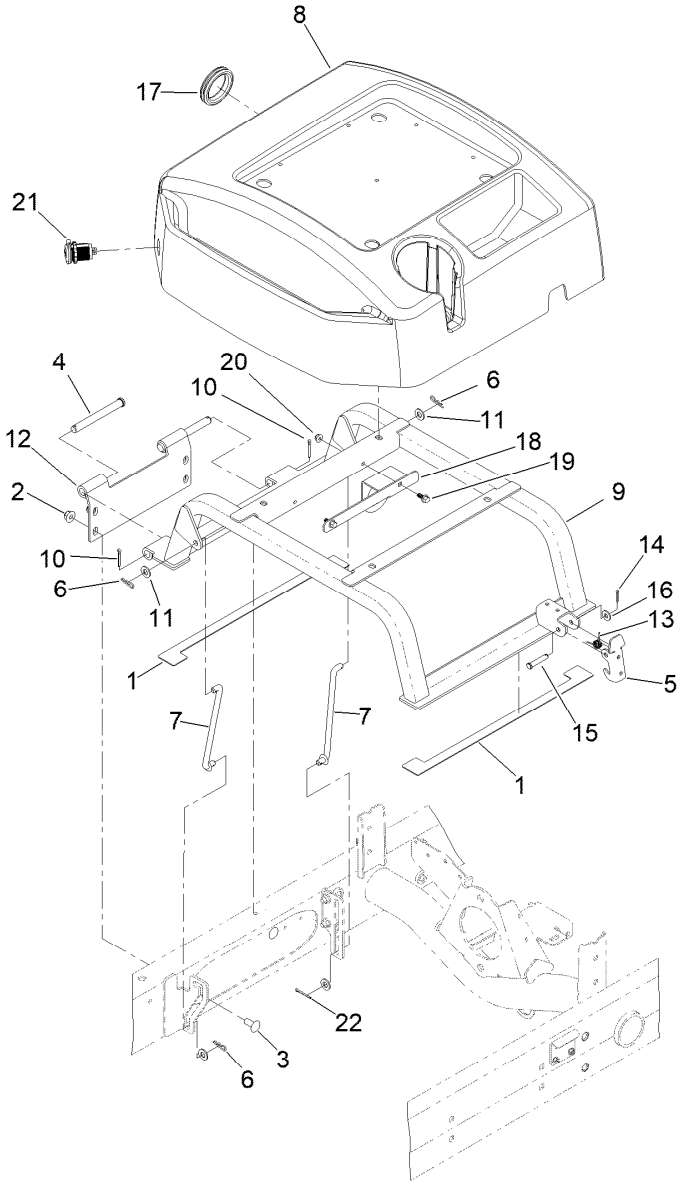

Seat Base Assembly

Ref.	Part Number	Qty.	Description
1	110-5255	2	Bumper-Base, Seat
2	119-4042	4	Nut-HF, NI
3	3231-27	4	Screw-CARR
4	283-83	2	Pin-Clevis
5	110-8971	1	Latch
6	3290-307	3	Pin-Cotter
7	98-0917	2	Rod-Prop
8	145-2450	1	Cover-Seatbase
9	125-2122-03	1	Seat Base ASM
10	3272-11	2	Pin-Cotter
11	3256-24	4	Washer-Plain

Ref.	Part Number	Qty.	Description
12	125-2121-03	1	Hinge-Seatbase
13	104-4821	1	Spring-Torsion
14	3272-6	1	Pin-Cotter
15	94-3829	1	Pin-Clevis
16	3256-2	1	Washer-Flat
17	240-12	1	Grommet-Rubber
18	145-2480-0P	1	Bracket-Harness
19	99-6810	2	Screw-HHF
20	104-7201	2	Nut-HF, NI
21	131-8388	1	Socket-USB
22	3272-4	1	Pin-Cotter

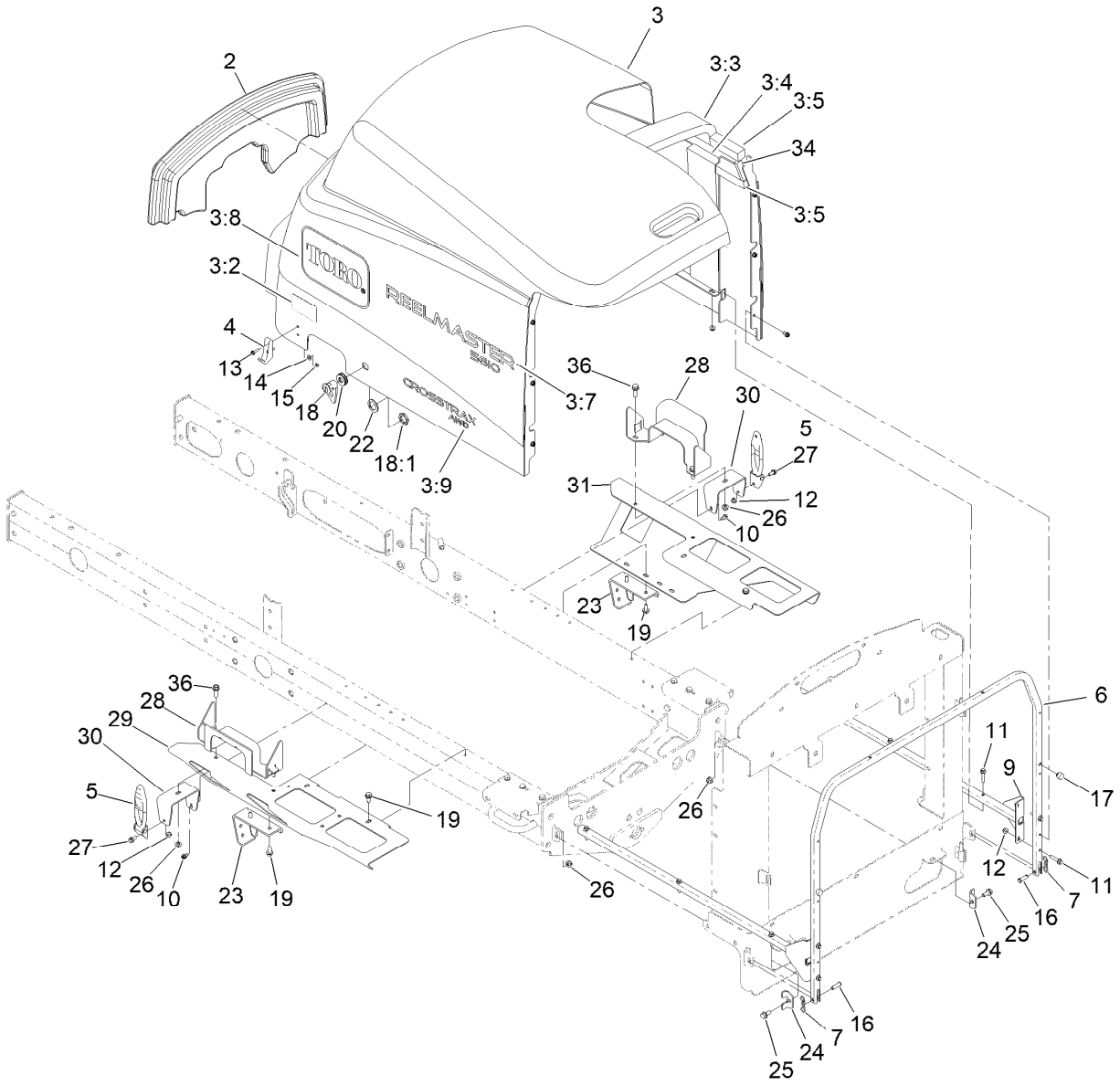

Hood Assembly

Ref.	Part Number	Qty.	Description
2	145-2456	1	Saddle-Hood
3	145-2540	1	Hood ASM (Rm5610 Service)
3:2	106-6754	2	Decal-Danger
3:3	110-8948	1	Foam-Hood
3:4	110-8947	2	Foam-Hood
3:5	110-8949	4	Seal-Foam
3:6	110-9002	1	Foil Tape Kit ●
3:7	110-0965	2	Decal
3:8	66-6140	2	Decal
3:9	110-8859	2	Decal
4	103-2897	2	Latch-Catch
5	103-2898	2	Latch-Rubber
6	125-8820-03	1	Tube-Hood
7	105-7512	2	Pin-Tie, Bow
9	108-1790-03	2	Tube
10	32104-17	8	Screw-HWH
11	3234-21	10	Screw-HHF

Ref.	Part Number	Qty.	Description
12	104-7201	12	Nut-HF, NI
13	32105-13	4	Screw-HWH
14	3256-14	4	Washer-Flat
15	3296-12	4	Nut-Lock, NI
16	283-61	2	Pin-Yoke
17	107-8042	2	Bumper-Rubber
18	98-5398	1	Latch
18:1	3218-20	1	Nut-Jam
19	32104-32	6	Screw-HWH
20	104-1453	1	Grommet
22	99-4958	1	Spacer
23	110-0979-03	2	Bracket-Deflector
24	110-8946	2	Clamp-Frame, Radiator
25	3234-5	2	Screw-HHF
26	119-4041	6	Nut-HF
27	3234-33	2	Screw-HHF
28	121-5627-03	2	Guide-Hood
29	110-5253-01	1	Adapter-Hood, LH

● Not illustrated

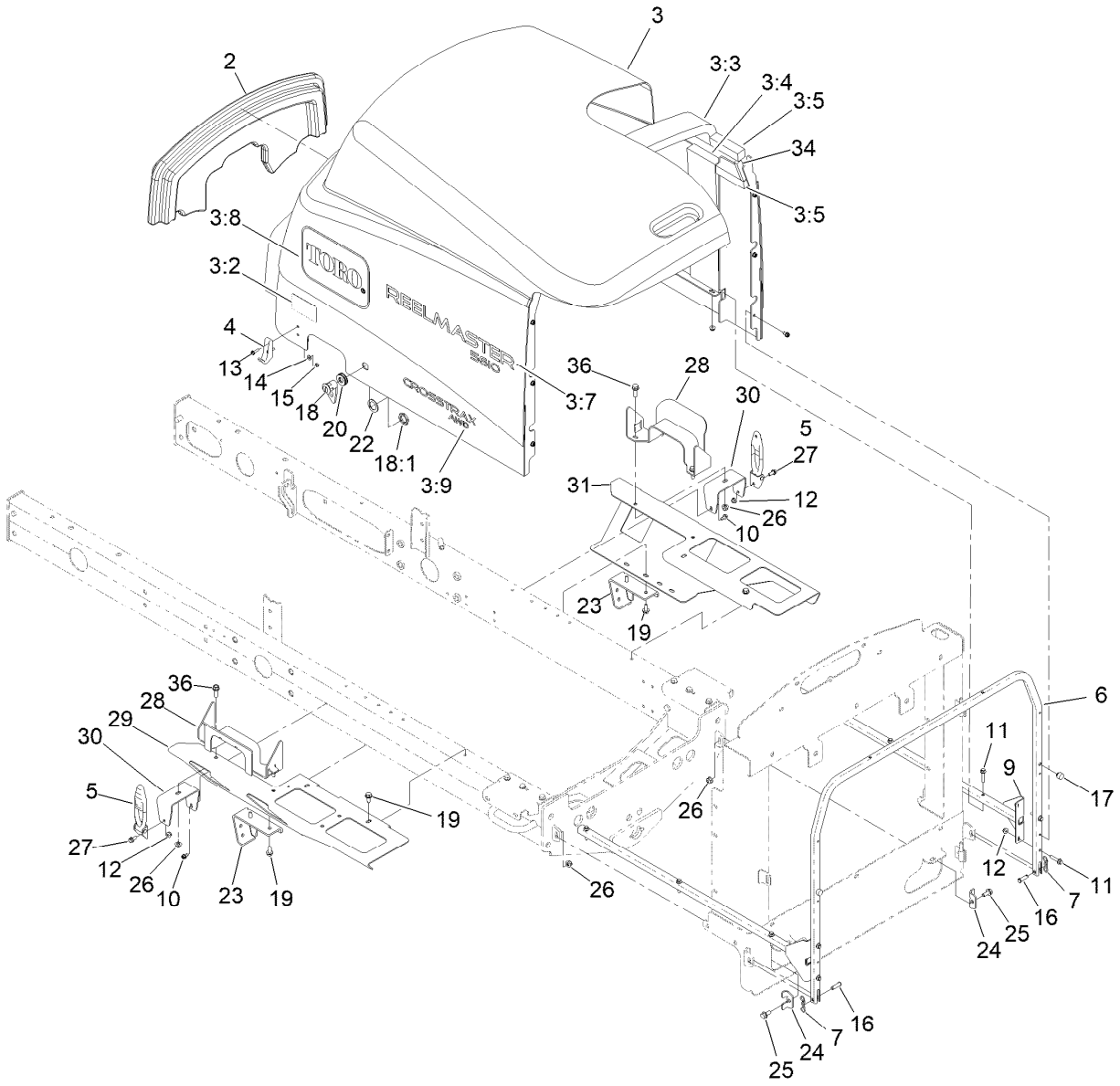

Hood Assembly (continued)

Ref.	Part Number	Qty.	Description
30	110-5256-01	2	Bracket-Latch, Hood
31	110-5254-01	1	Adapter-Hood, RH
34	110-8950	2	Seal-Foam
36	3234-17	4	Screw-HHF

● Not illustrated

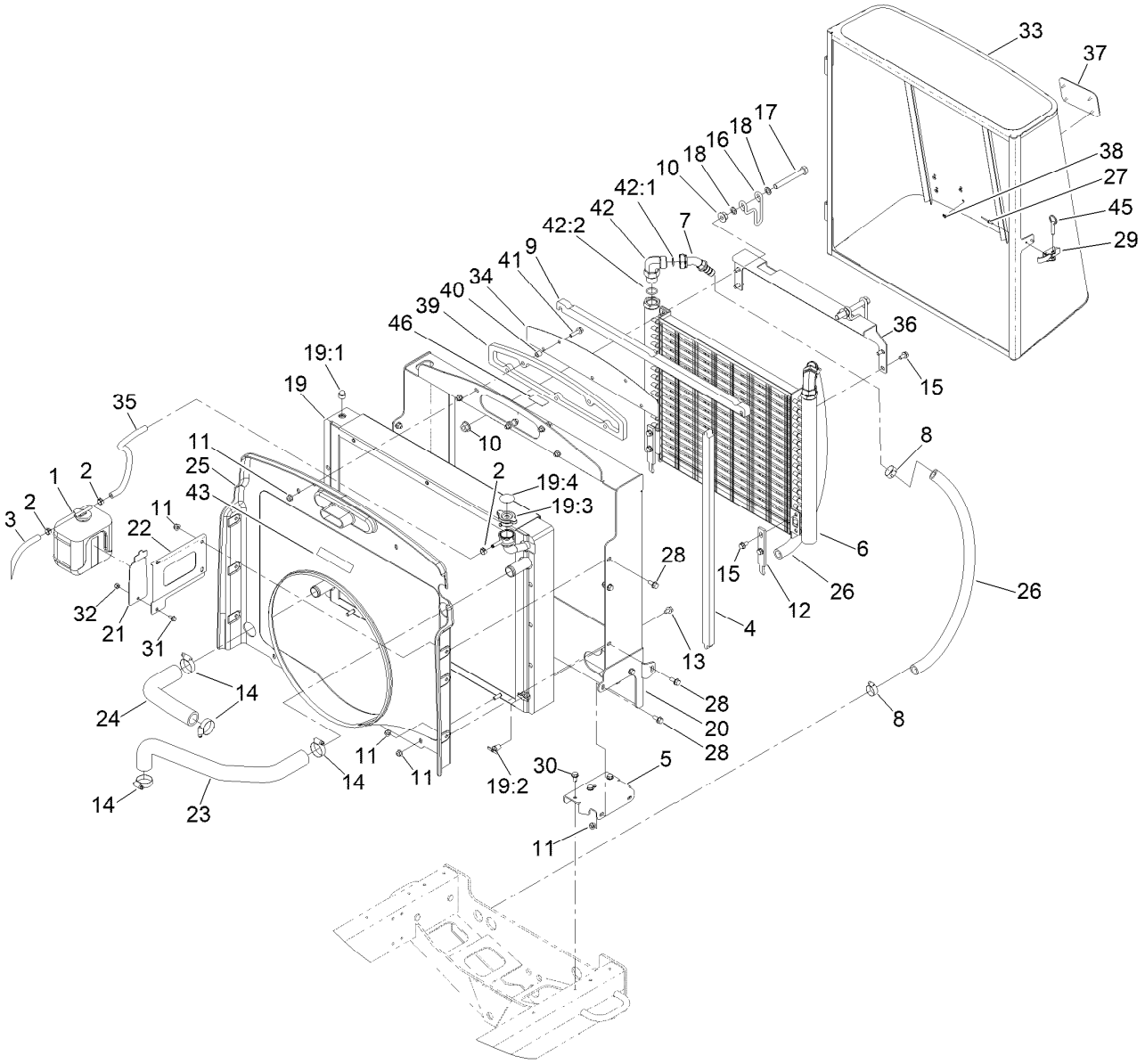

Radiator Assembly

Ref.	Part Number	Qty.	Description
1	108-0638	1	Bottle-Overflow
2	92-2379	3	Clamp-Hose
3	110-3257	1	Hose-Fuel
4	110-5275	2	Seal-Foam
5	110-5310-0P	2	Bracket - Mounting
6	110-0485	1	Cooler-Oil
7	104-7851	2	Fitting-HYD, 45 DEG
8	2412-34	4	Clamp-Hose
9	110-5276	2	Seal-Foam
10	32128-49	4	Nut-HHF
11	119-4041	17	Nut-HF
12	104-5460-03	2	Plate-Mount, Oil Cooler
13	3234-30	6	Screw-HHF
14	2412-3	4	Clamp-Hose
15	3234-14	8	Screw-HHF
16	104-5429	2	Clamp-Form, Wire
17	325-17	2	Screw-HH
18	41-8440	4	Washer
19	117-8093	1	Radiator ASM
19:1	281-13	1	Plug-Pipe
19:2	304-46	1	Draincock

Ref.	Part Number	Qty.	Description
19:3	93-5957	1	Cap-Radiator
19:4	106-6755	1	Decal-Cap, Radiator
20	110-5251-03	1	Frame-Radiator
21	108-1665-0P	1	Bracket - Reservior
22	108-1666-0P	1	Bracket - Reservoir
23	110-8942	1	Hose-Formed
24	110-8943	1	Hose-Formed
25	110-5311	1	Shroud-Fan
26	110-8955	2	Hose
27	3269-15	2	Rivet-Pop
28	3234-5	10	Screw-HHF
29	115-1554	1	Latch-Draw
30	32104-32	6	Screw-HWH
31	3234-13	1	Screw-HHF
32	3296-42	1	Nut-Lock, NI
33	110-5269-03	1	Screen
34	108-1843-0P	1	Screen - Air Intake
35	110-4104	1	Hose-Fuel
36	104-5428	1	Bracket-Oil Cooler, Top
37	93-6028	1	Plate-Logo
38	138-6996	4	Nut-Push

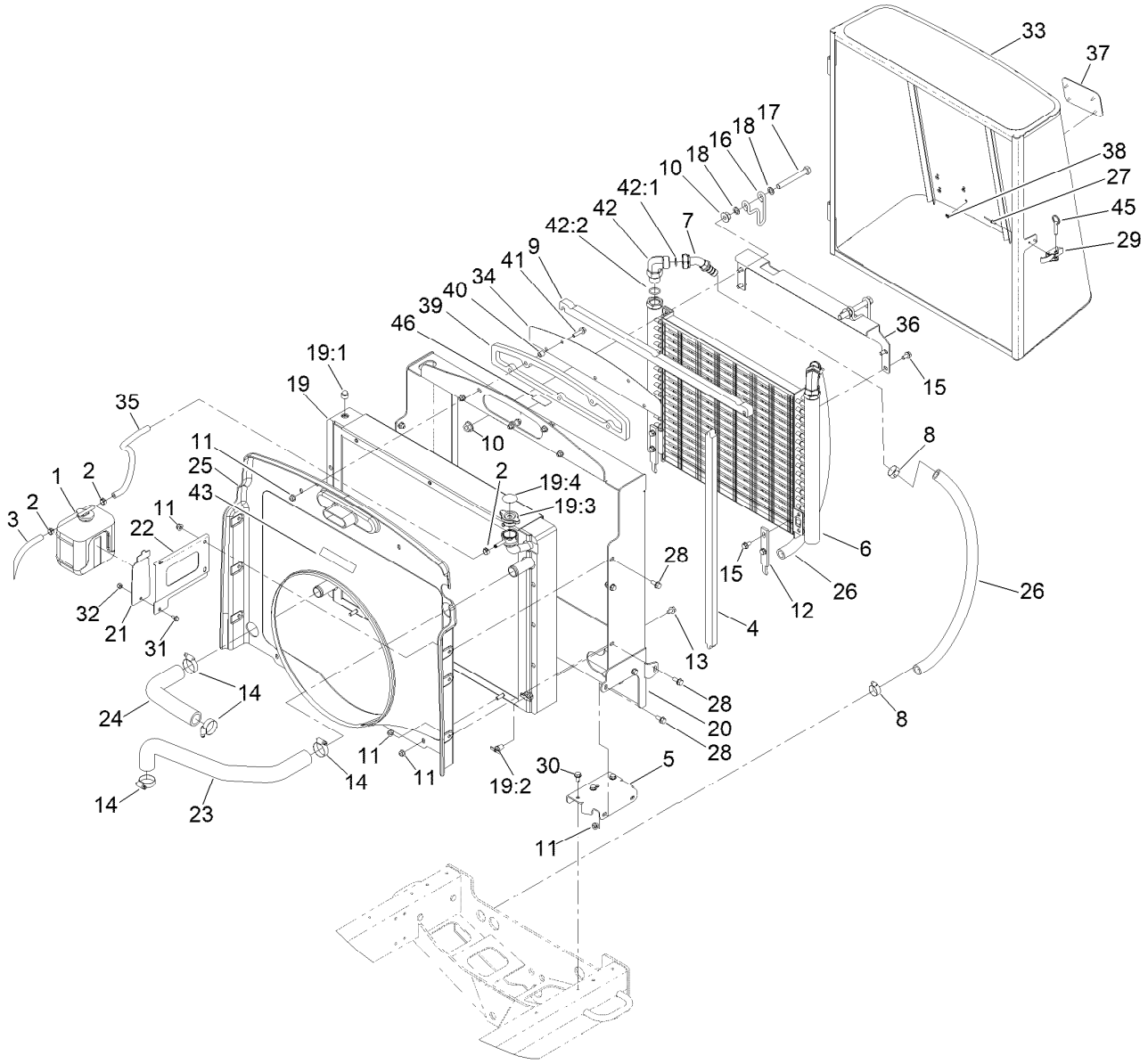

Radiator Assembly (continued)

Ref.	Part Number	Qty.	Description
39	110-5324	1	Seal-Foam
40	1-603903	5	Spacer
41	3234-36	5	Screw-HHF
42	340-142	2	Fitting-Elbow, 90 DEG
42:1	237-58	1	O-Ring
42:2	237-81	1	O-Ring
43	93-7272	1	Decal-Warning
45	115-1556	1	Pin-Ball, Detent
46	137-8127	1	Decal-No Spray

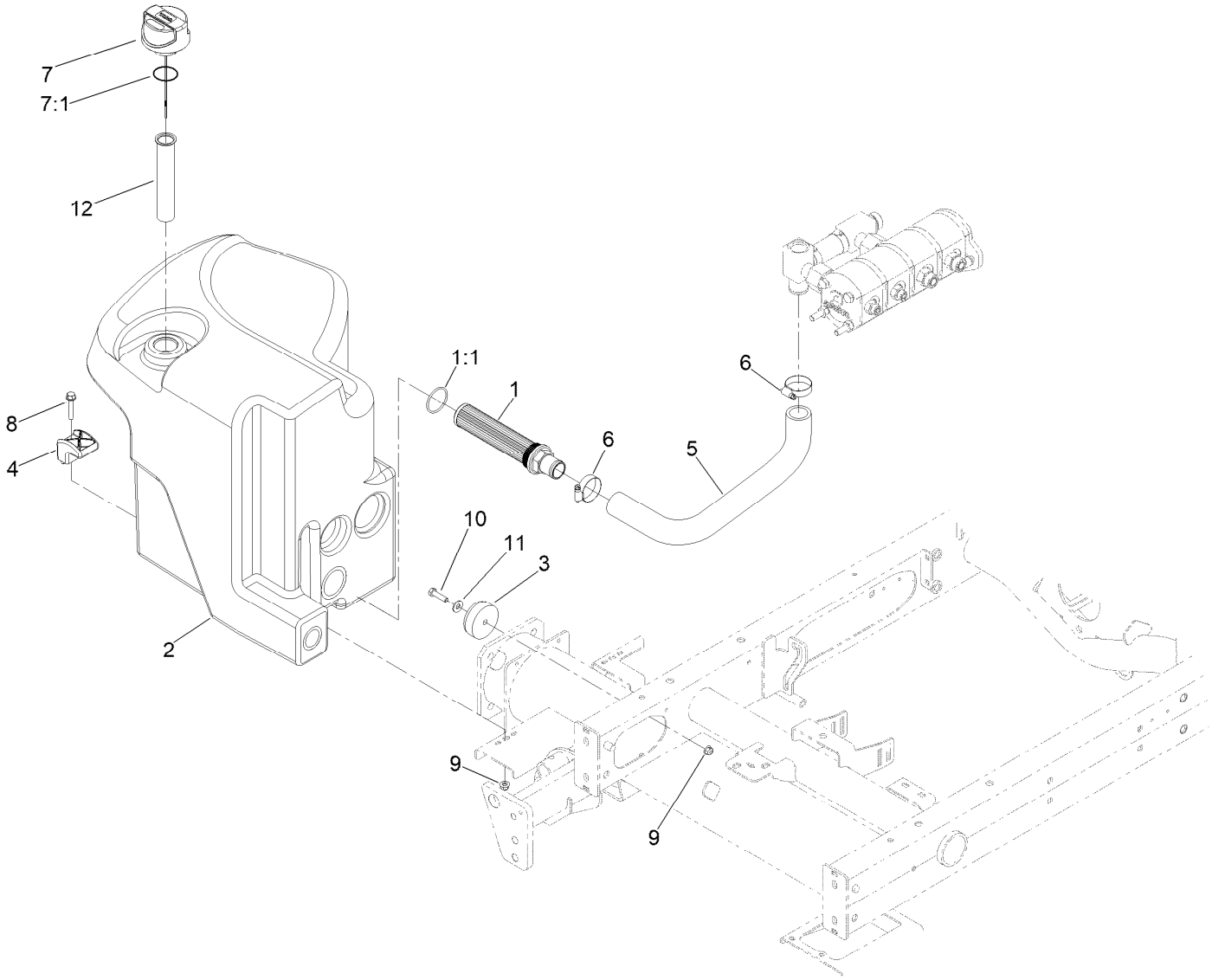

Hydraulic Tank Assembly

Ref.	*Part Number*	*Qty.*	*Description*
1	145-2463	1	Strainer-Tank, Hydraulic
1:1	340-136	1	O-Ring
2	145-2487	1	Tank-Hydraulic
3	108-1605	1	Bumper-Recess
4	107-4543	2	Clamp
5	144-2076	1	Hose-Suction
6	2412-3	2	Clamp-Hose
7	117-0193	1	Cap-Hydraulic, Vented Breather
7:1	237-101	1	O-Ring
8	94-5780	2	Screw-HWH
9	119-4041	3	Nut-HF
10	322-6	1	Screw-HH
11	3256-3	1	Washer-Flat
12	61-2790	1	Filter-Screen

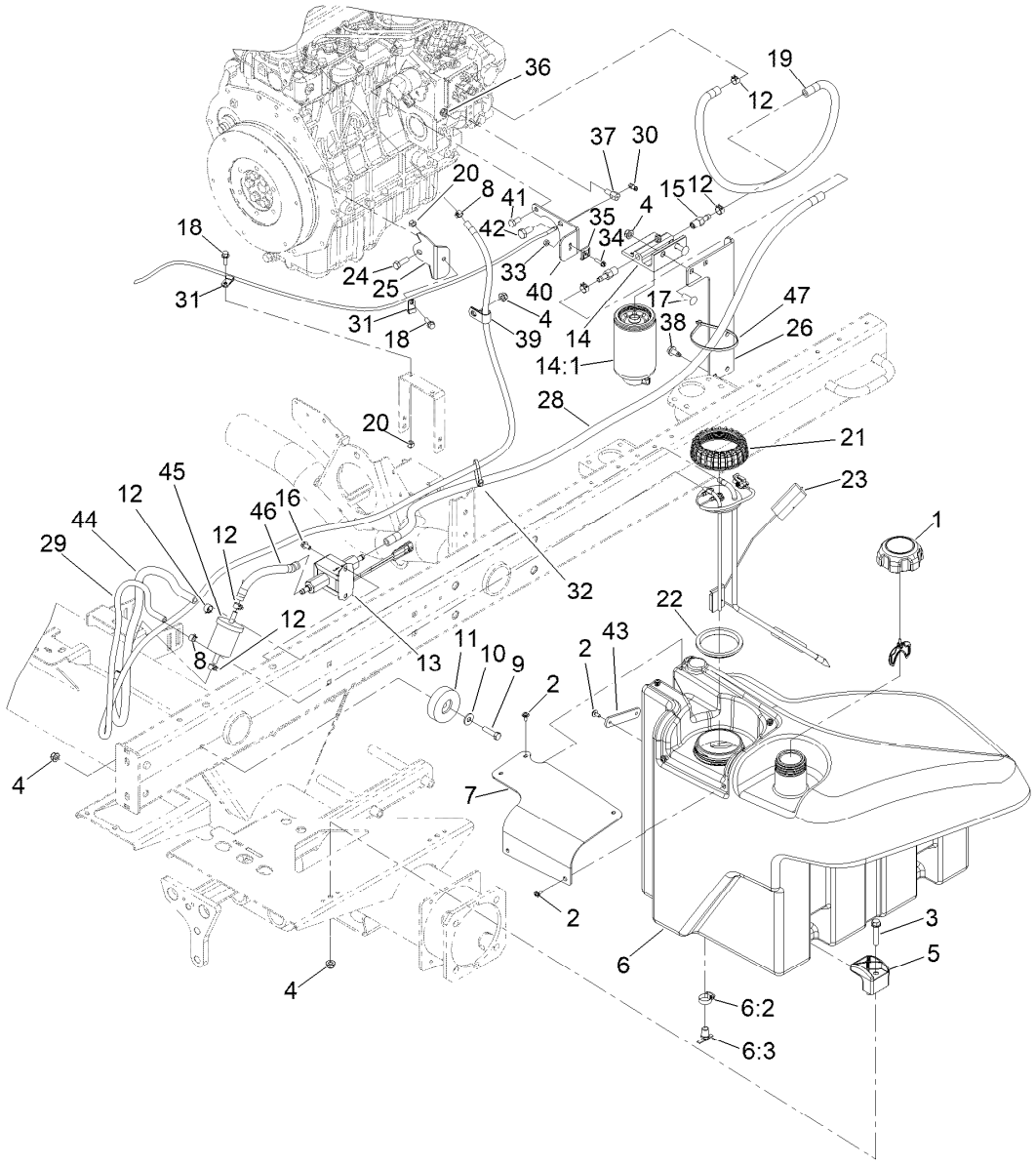

Fuel System Assembly

Ref.	Part Number	Qty.	Description
1	117-5894	1	Fuel Cap ASM
2	109-2661	7	Screw-PPH
3	94-5780	2	Screw-HWH
4	119-4041	6	Nut-HF
5	107-4543	2	Clamp
6	125-2907	1	Fuel Tank ASM
6:2	2412-36	1	Clamp-Hose
6:3	304-46	1	Draincock
7	125-2903	1	Cover-Pump/Sender
8	2412-80	2	Clamp-Hose
9	322-6	1	Screw-HH
10	3256-3	1	Washer-Flat
11	108-1605	1	Bumper-Recess
12	92-2379	8	Clamp-Hose
13	145-3160	1	Pump-Fuel, Electric
14	110-9044	1	Separator-Filter
14:1	110-9049	1	Filter-Spin On, Fuel/Water
15	353-783	2	Fitting-STR
16	32144-4	2	Screw-HWH
17	3230-22	2	Screw-CARR
18	3234-4	2	Screw-HHF

Ref.	Part Number	Qty.	Description
19	109-0309	1	Hose-Fuel
20	3296-42	2	Nut-Lock, NI
21	140-6245	1	Cap-Pump, Fuel
22	140-6246	1	Gasket-Pump, Fuel,
23	121-5642	1	Sender-Fuel
24	322-5	1	Screw-HH
25	110-9007-0P	1	Support - Cable, Throttle
26	110-8968-0P	1	Mount-Water Separator
28	138-4714	1	Hose-Fuel
29	125-8808	1	Hose-Fuel
30	112-9919	1	Stop-Cable, Throttle
31	2412-149	2	Clamp-R
32	3290-378	4	Tie-Cable
33	3296-2	1	Nut-Lock, NI
34	32105-13	1	Screw-HWH
35	81-1690	1	Clamp-Cable
36	3296-20	1	Nut-Lock, NI
37	98-9311	1	Swivel-Throttle
38	32104-32	4	Screw-HWH
39	2412-41	1	Clamp-R
40	110-9009-0P	1	Bracket-Cable, Throttle

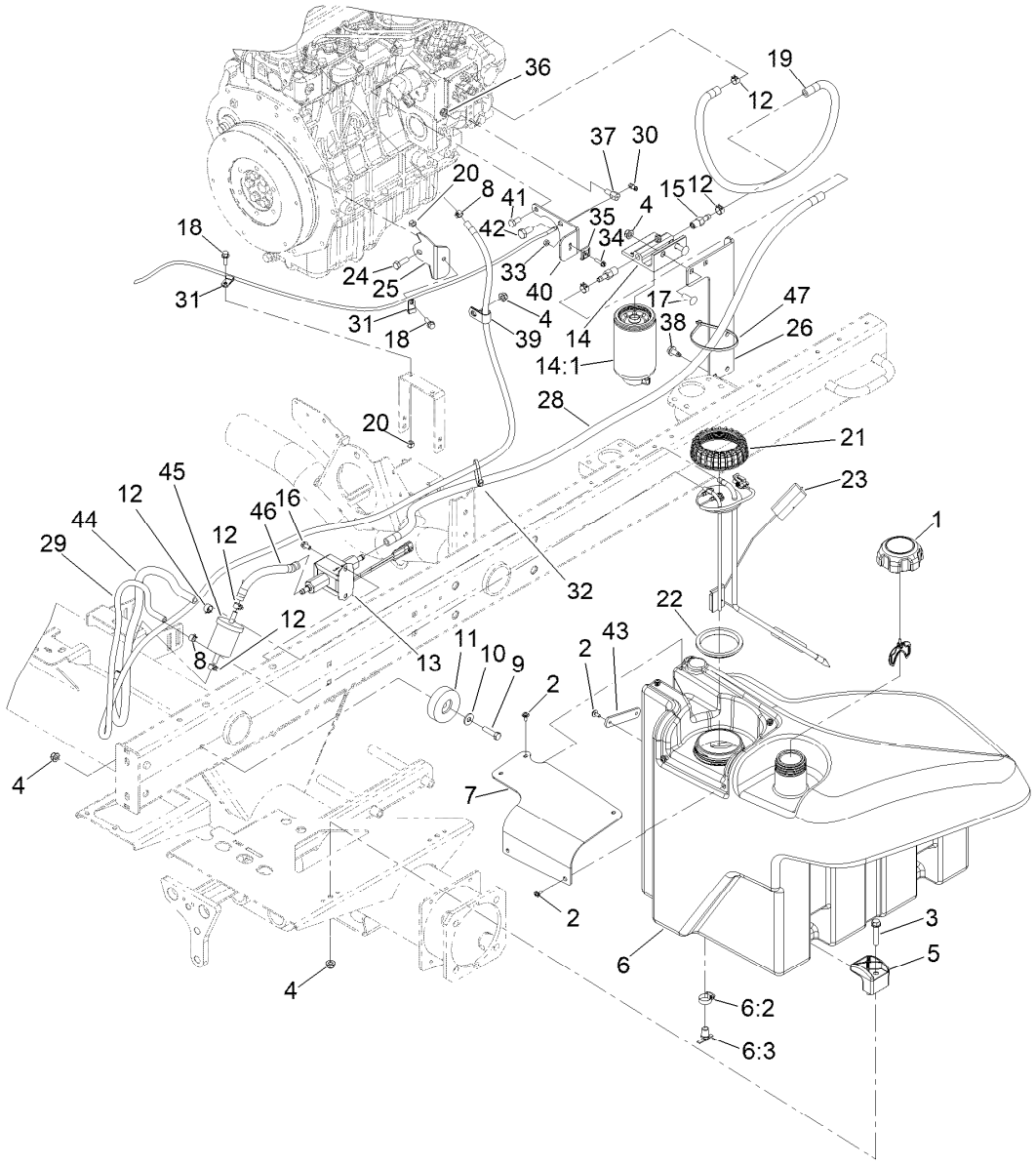

Fuel System Assembly (continued)

Ref.	Part Number	Qty.	Description
41	33114-016	1	Screw-HH
42	63-7790	1	Screw-Cap
43	125-2945	1	Strap-Cable
44	110-3257	1	Hose-Fuel
45	98-7612	1	Filter-Fuel
46	112-2386	1	Hose-Fuel
47	3290-379	1	Tie-Cable

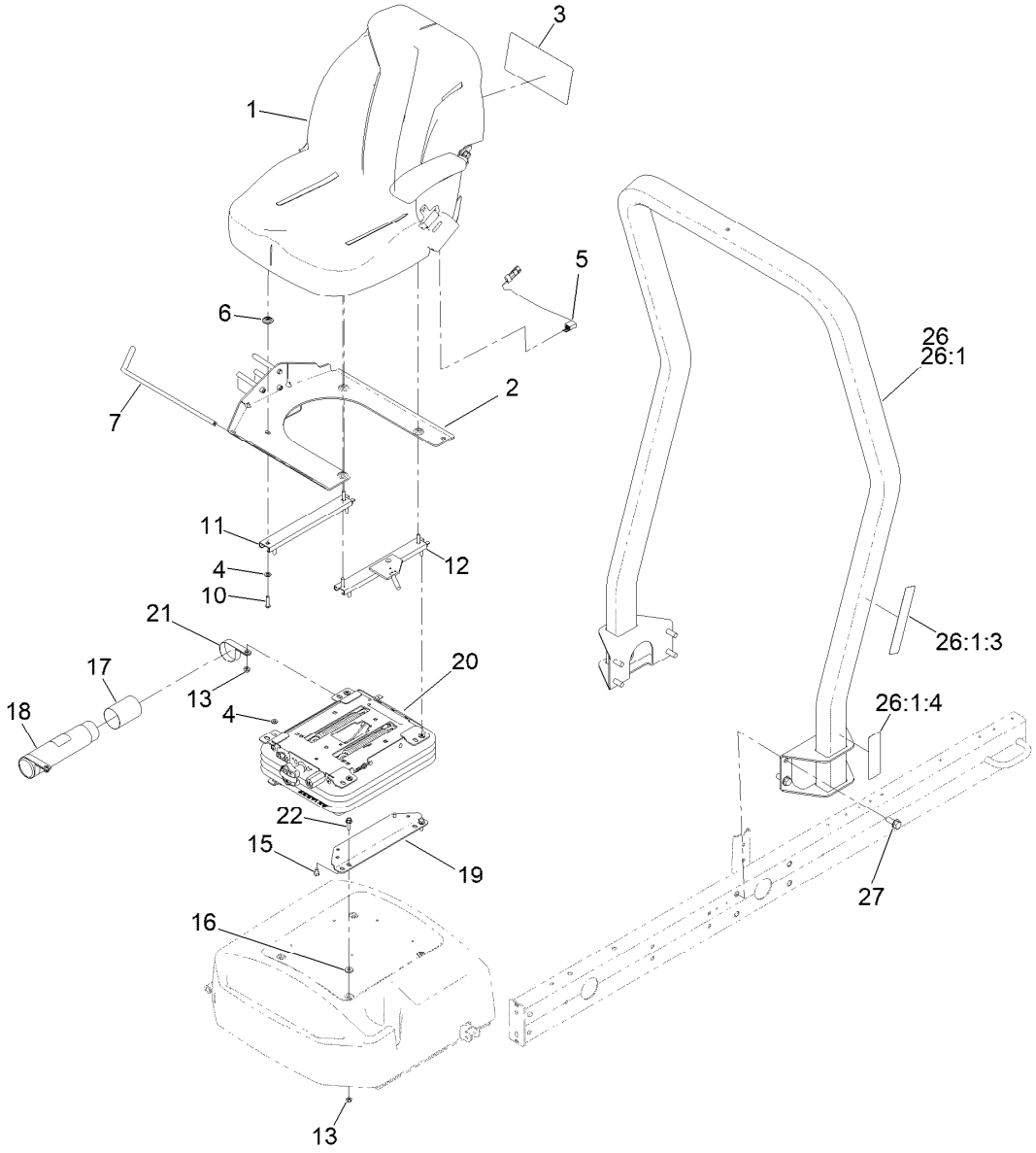

Seat and Roll-Over Protection System Assembly

Ref.	Part Number	Qty.	Description
1	139-2700	1	Seat ASM
2	138-6985-03	1	Mount-Seat
3	145-2572	1	Decal-Service
4	3256-23	8	Washer-Plain
5	108-8657	1	Harness-Wire, Seat
6	136-9002	4	Spacer-Mounting
7	130-7100	1	Trim-Seatbase
10	3290-511	4	Screw-HSBH
11	92-8990	1	Adjuster-Seat, Non-Locking
12	92-8991	1	Adjuster (W/Latch)
13	119-4041	8	Nut-HF
15	48-7680	4	Screw-HH

Ref.	Part Number	Qty.	Description
16	71-9310	4	Spacer
17	104-7048	1	Cap-Housing
18	104-7050	1	Tube-Manual
19	108-6590-0P	2	Bracket-Seat, Lower
20	145-5295	1	Suspension ASM
21	2412-133	2	Clamp-R
22	3234-17	4	Screw-HHF
26	136-7954	1	ROPS ASM
26:1		1	ROPS ASM ●
26:1:3	136-3702	1	Decal-Safety, ROPS
26:1:4	136-2159	1	Decal-Seat Service
27	3234-38	8	Screw-HHF

● Not serviced separately

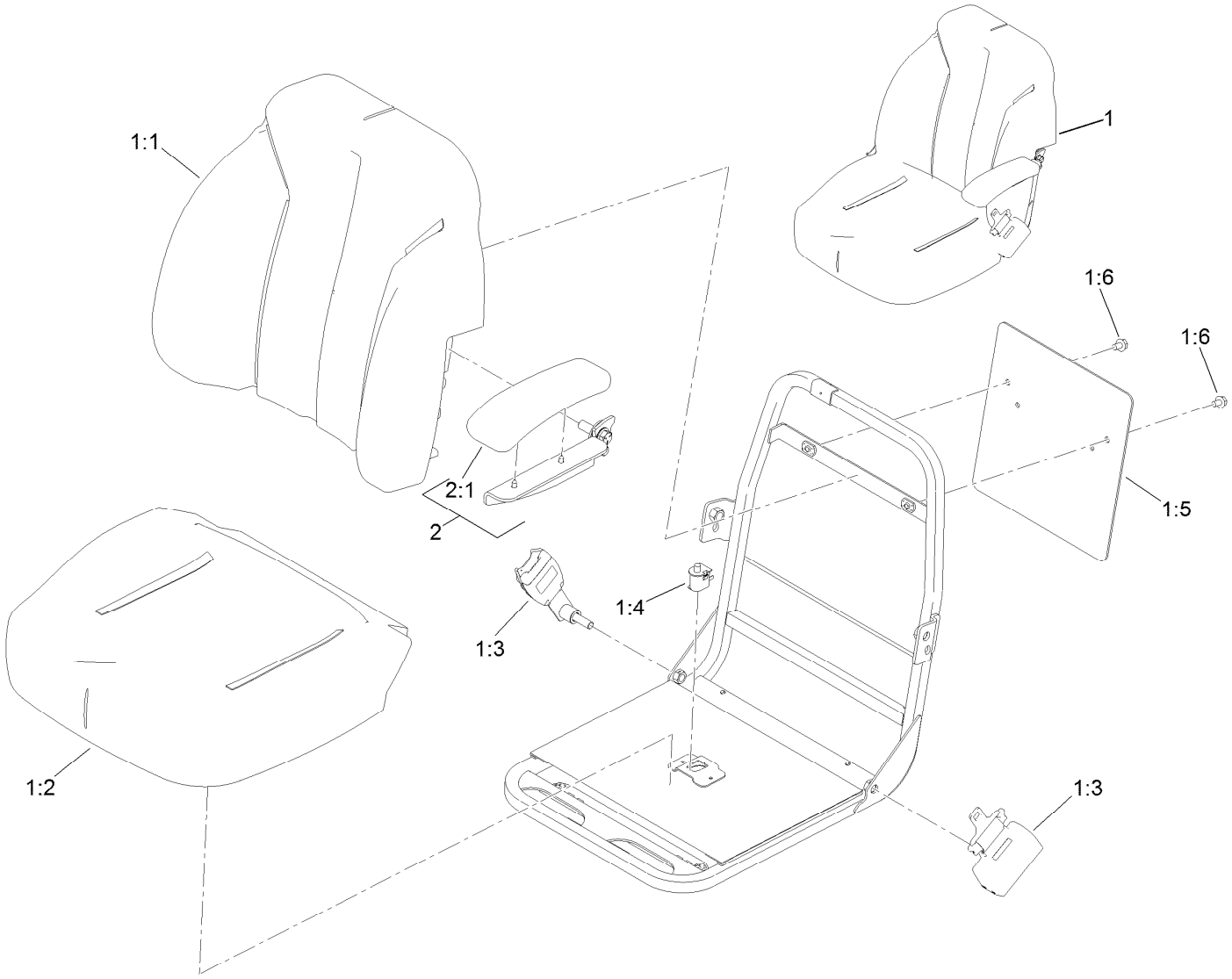

Seat Assembly No. 139-2700

Ref.	*Part Number*	*Qty.*	*Description*
1	139-2680	1	Seat ASM
1:1	145-0083	1	Cover-Seat, Back
1:2	145-0084	1	Cover-Seat, Bottom
1:3	139-2707	1	Seat Belt Kit
1:4	82-2190	1	Switch-Bail
1:5	139-2701	1	Plate-Decal
1:6	3234-30	2	Screw-HHF
2	121-3660	1	LH Arm Rest Kit
2:1	110-4163	1	Cushion-Rest, Arm

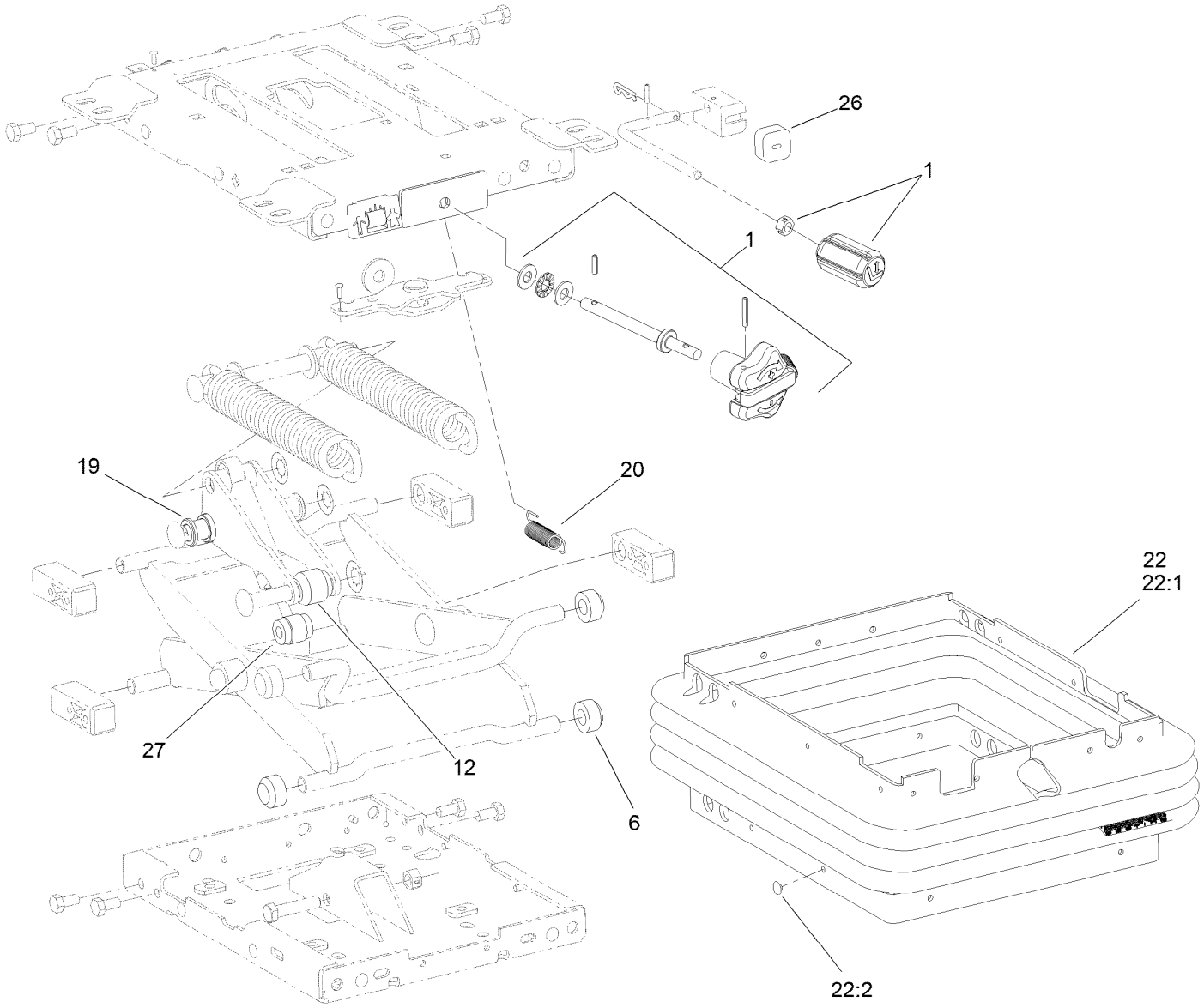

Mechanical Seat Suspension Assembly No. 145-5295

Ref.	*Part Number*	*Qty.*	*Description*
1	145-5296	1	Knob Service Kit
6	108-9632	4	Roller
12	145-5297	1	Roller-Plastic, 36MM
19	108-9622	2	Tube
20	108-9633	1	Spring-Extension
22	112-0164	1	Boot Kit
22:1		1	Boot-Suspension ●
22:2	108-9641	21	Clip-Plug
26	108-9634	1	Bumper
27	108-9614	1	Damper

● Not serviced separately

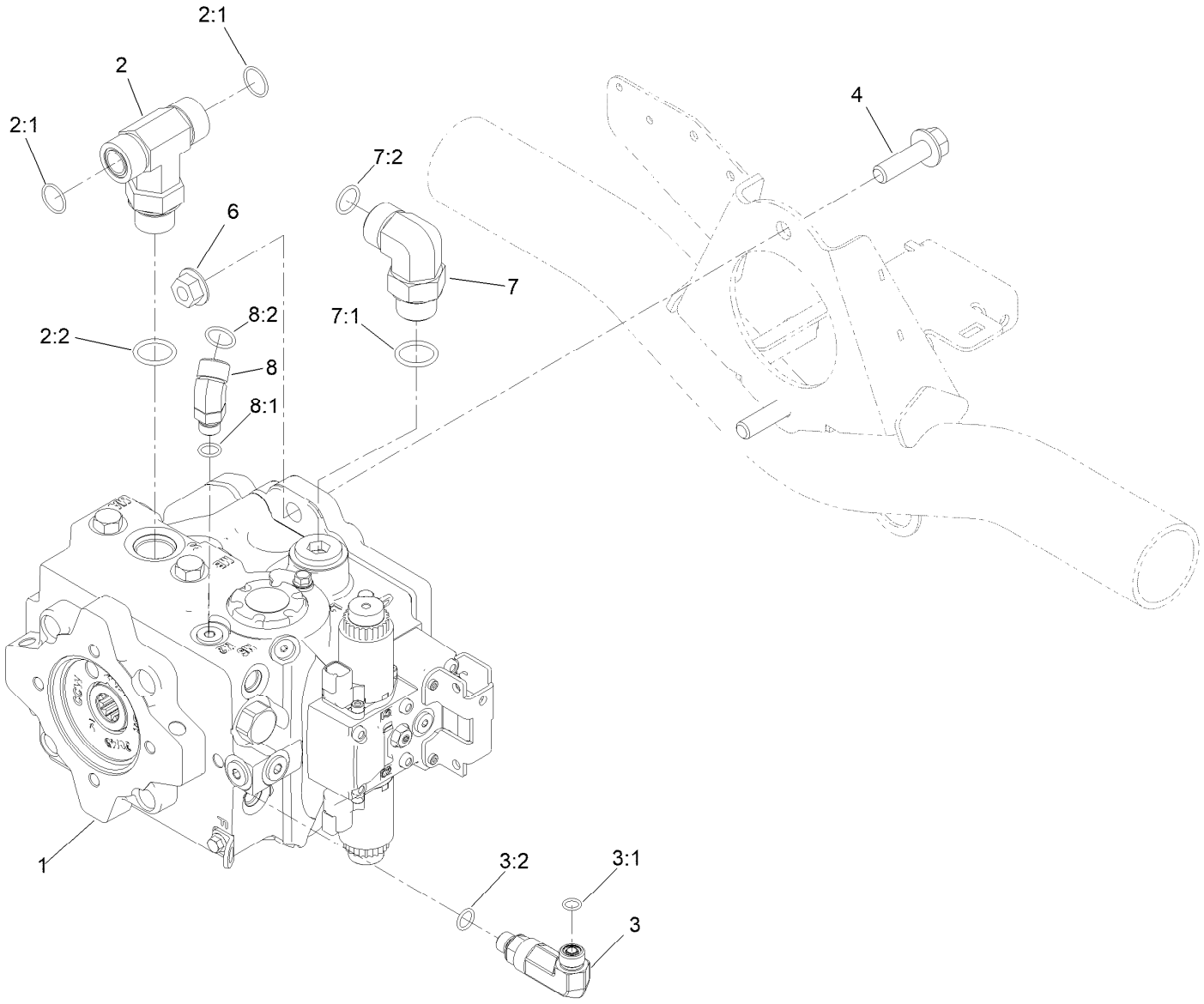

Traction Pump Mounting Assembly

Ref.	*Part Number*	*Qty.*	*Description*
1	144-2060	1	Pump-Hydraulic
2	104-4836	1	Fitting-Tee
2:1	237-58	2	O-Ring
2:2	237-81	1	O-Ring
3	145-2645	1	Fitting-Elbow 90 Long
3:1	237-22	1	O-Ring
3:2	237-42	1	O-Ring
4	130-6481	2	Screw-HHF
6	32128-49	2	Nut-HHF
7	340-142	1	Fitting-Elbow, 90 DEG
7:1	237-58	1	O-Ring
7:2	237-81	1	O-Ring
8	340-96	1	Adapter
8:1	237-30	1	O-Ring
8:2	237-42	1	O-Ring

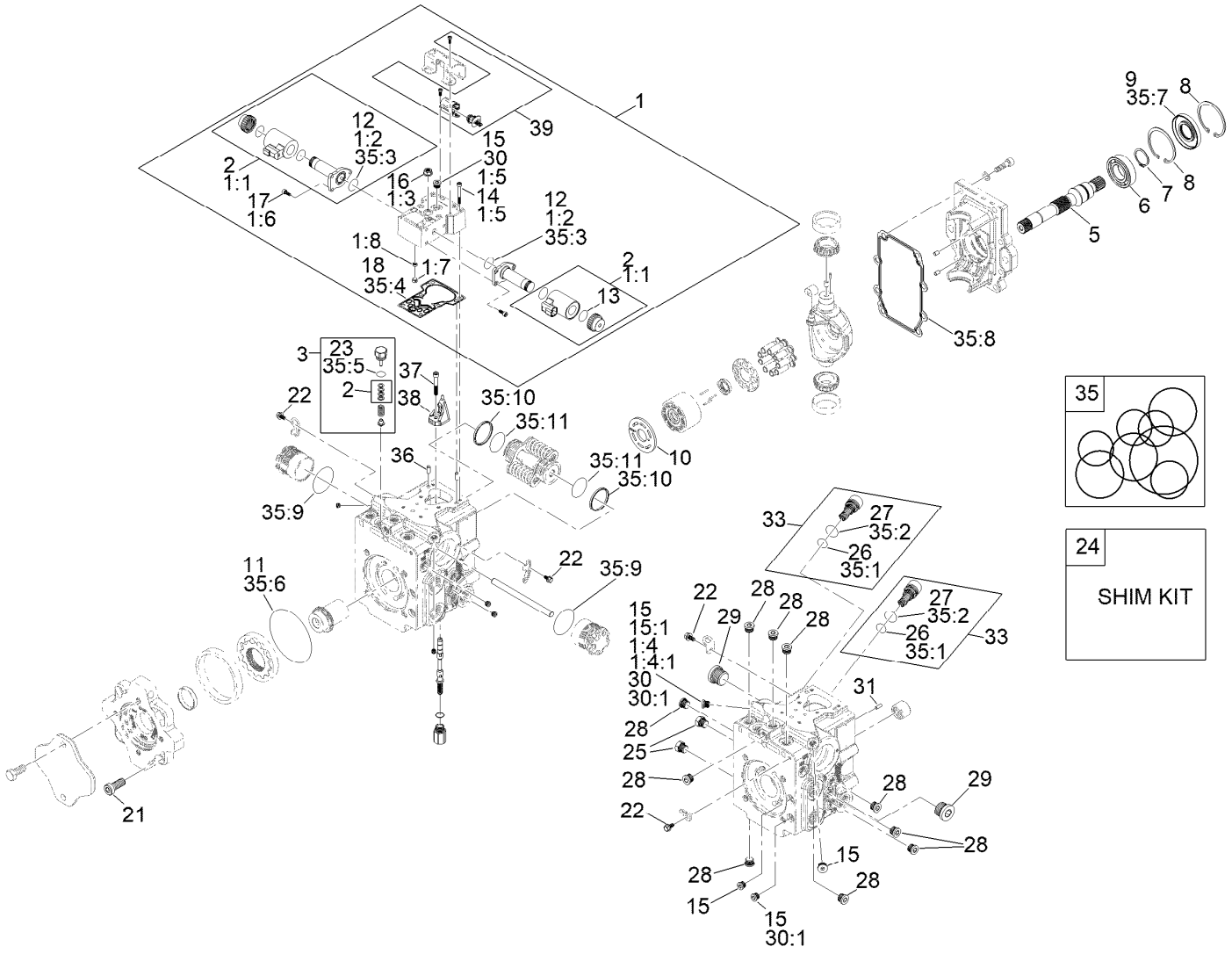

Hydraulic Pump Assembly No. 144-2060

Ref.	Part Number	Qty.	Description
1	136-3209	1	Control Kit (12 Volt)
1:1	132-6204	2	Coil Kit
1:2	125-5288	2	O-Ring
1:3	125-5273	1	Nut-Seal
1:4	75-0170	1	Plug-Thread, Straight
1:4:1	92-8777	1	O-Ring
1:5	125-5274	6	Screw
1:6	125-5272	6	Screw
1:7	136-3213	1	Gasket-Control
1:8	136-3218	1	Sensor Kit
2	125-5294	2	Coil Kit
3	161-7203	1	Charge Relief Valve
5	139-4811	1	Shaft-13Tooth
6	139-4820	1	Bearing-Ball
7	139-4806	1	Ring-Retaining
8	139-4831	2	Ring-Retaining
9	161-7202	1	Oil Seal-Black
10	139-4813	1	Plate-Valve

Ref.	Part Number	Qty.	Description
11	161-7206	1	O-Ring As568-244 Nbr90
12	125-5288	2	O-Ring
13	131-7388	2	O-Ring
14	125-5274	6	Screw
15	75-0170	4	Plug-Thread, Straight
15:1	92-8777	1	O-Ring
16	161-7200	1	Nut-Hex Seal
17	125-5272	6	Screw
18	125-5283	1	Gasket-Control
21	125-5282	4	Screw
22	125-5270	4	Screw
23	28-3570	1	O-Ring
24	92-1353	1	Shim Kit
25	136-1026	1	Plug ASM
26	75-0240	2	O-Ring
27	84-0560	2	O-Ring
28	69-3080	10	Plug
29	69-3130	1	Plug

● Not illustrated

■ Not serviced separately

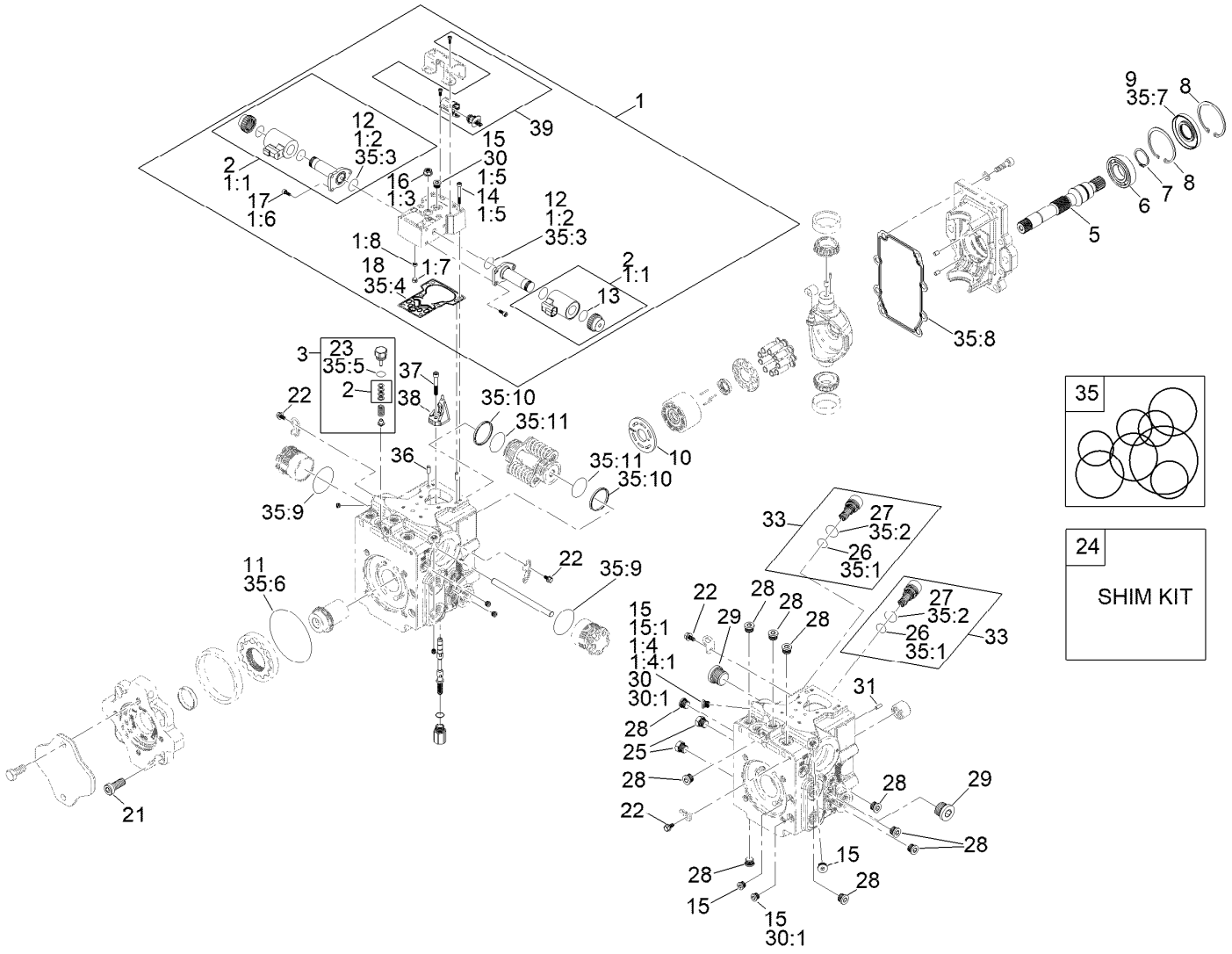

Hydraulic Pump Assembly No. 144-2060 (continued)

Ref.	Part Number	Qty.	Description
30	75-0170	4	Plug-Thread, Straight
30:1	92-8777	1	O-Ring
31	75-0510	1	Pin
33	161-7204	1	Valve-Scr Assembly 260 Bar (3770 PSI)
35	132-6205	1	Overhaul Seal Kit
35:1	75-0240	2	O-Ring
35:2	84-0560	2	O-Ring
35:3	125-5288	2	O-Ring
35:4	125-5283	1	Gasket-Control
35:5	28-3570	1	O-Ring
35:6	132-6206	1	O-Ring
35:7	127-6214	1	Seal-Lip
35:8		1	Gasket ■
35:9		2	O-Ring ■
35:10		2	Piston Ring ■
35:11		2	O-Ring ■
36	136-3215	2	Pin
37	136-3216	1	Screw, M6 X 35
38	136-3217	1	Link - Swashplate Feedback
39	136-3218	1	Sensor Kit ●

● Not illustrated

■ Not serviced separately

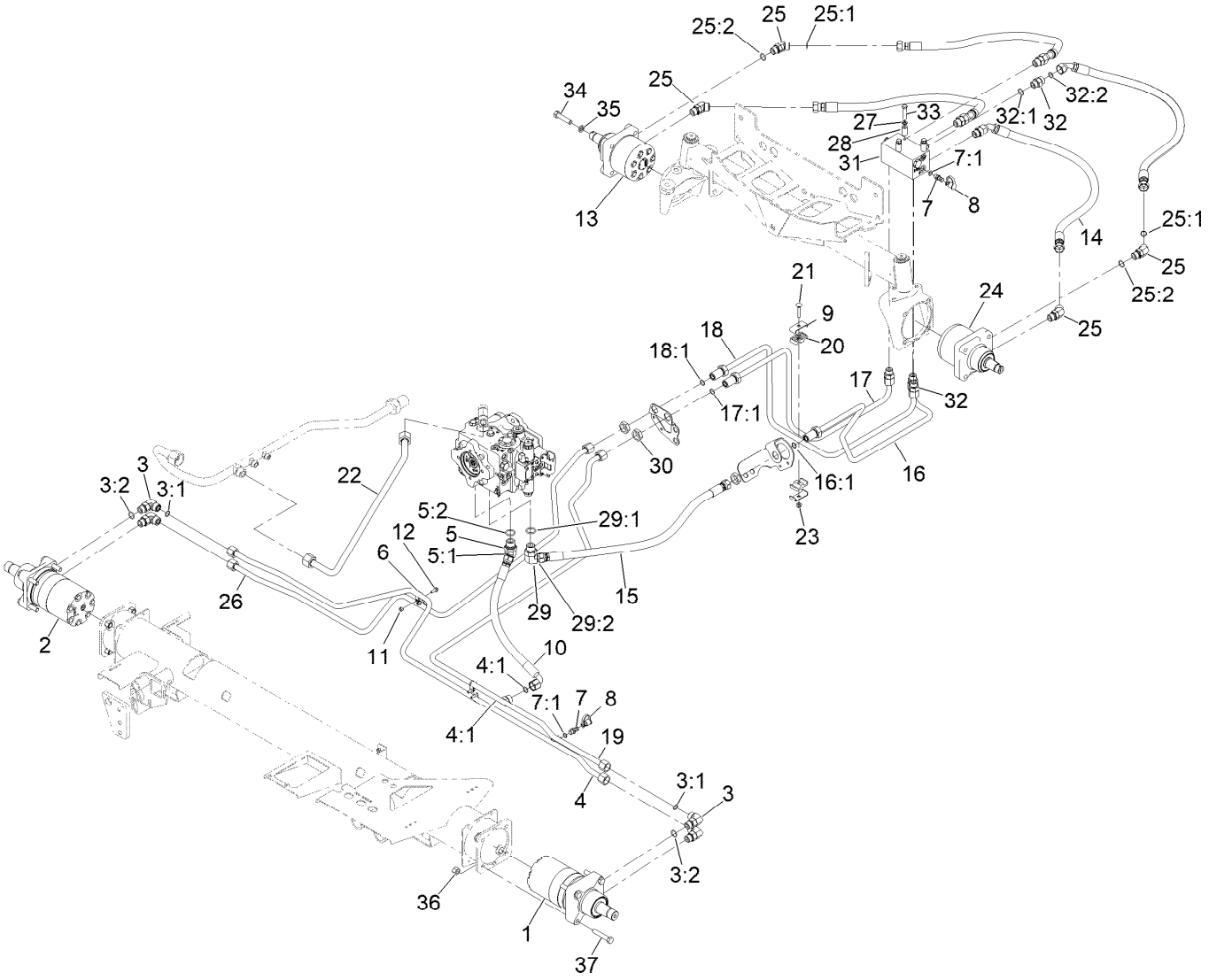

Traction Hydraulic Assembly

Ref.	Part Number	Qty.	Description
1	163-3542	1	Hydraulic Motor ASM
2	163-3543	1	Hydraulic Motor ASM
3	340-17	4	Fitting-Elbow, 90 DEG
3:1	237-65	1	O-Ring
3:2	237-80	1	O-Ring
4	108-7632	1	Hydraulic Tube ASM
4:1	237-65	1	O-Ring
5	340-156	1	Fitting-Elbow 45
5:1	237-65	1	O-Ring
5:2	237-81	1	O-Ring
6	2412-134	4	Clamp-R
7	59-7410	3	Fitting-Diagnostic
7:1	237-42	1	O-Ring
8	354-79	3	Cap-Dust
9	119-1419	2	Plate-Clamp
10	108-1679	1	Hose-HYD
11	3296-42	4	Nut-Lock, NI
12	3234-4	4	Screw-HHF
13	138-0436	1	Motor-Hydraulic, CW
14	106-3662	4	Hose-HYD
15	108-7645	1	Hose-HYD

Ref.	Part Number	Qty.	Description
16	108-7626	1	Tube ASM
16:1	237-65	1	O-Ring
17	108-7625	1	Tube ASM
17:1	237-65	1	O-Ring
18	108-7624	1	Tube ASM
18:1	237-65	1	O-Ring
19	108-7623	1	Hydraulic Tube ASM
20	56-7971	2	Clamp-Tube
21	3230-5	1	Bolt-CARR
22	145-2560	1	Hydraulic Tube ASM
23	119-4041	1	Nut-HF
24	138-0435	1	Motor-Hydraulic, CCW
25	340-14	4	Fitting-HYD, 45 DEG
25:1	237-65	1	O-Ring
25:2	237-80	1	O-Ring
26	108-7622	1	Hydraulic Tube ASM
27	3253-21	3	Washer-Lock
28	93-6981	3	Spacer
29	340-139	1	Fitting-Elbow 90
29:1	237-81	1	O-Ring
29:2	237-65	1	O-Ring

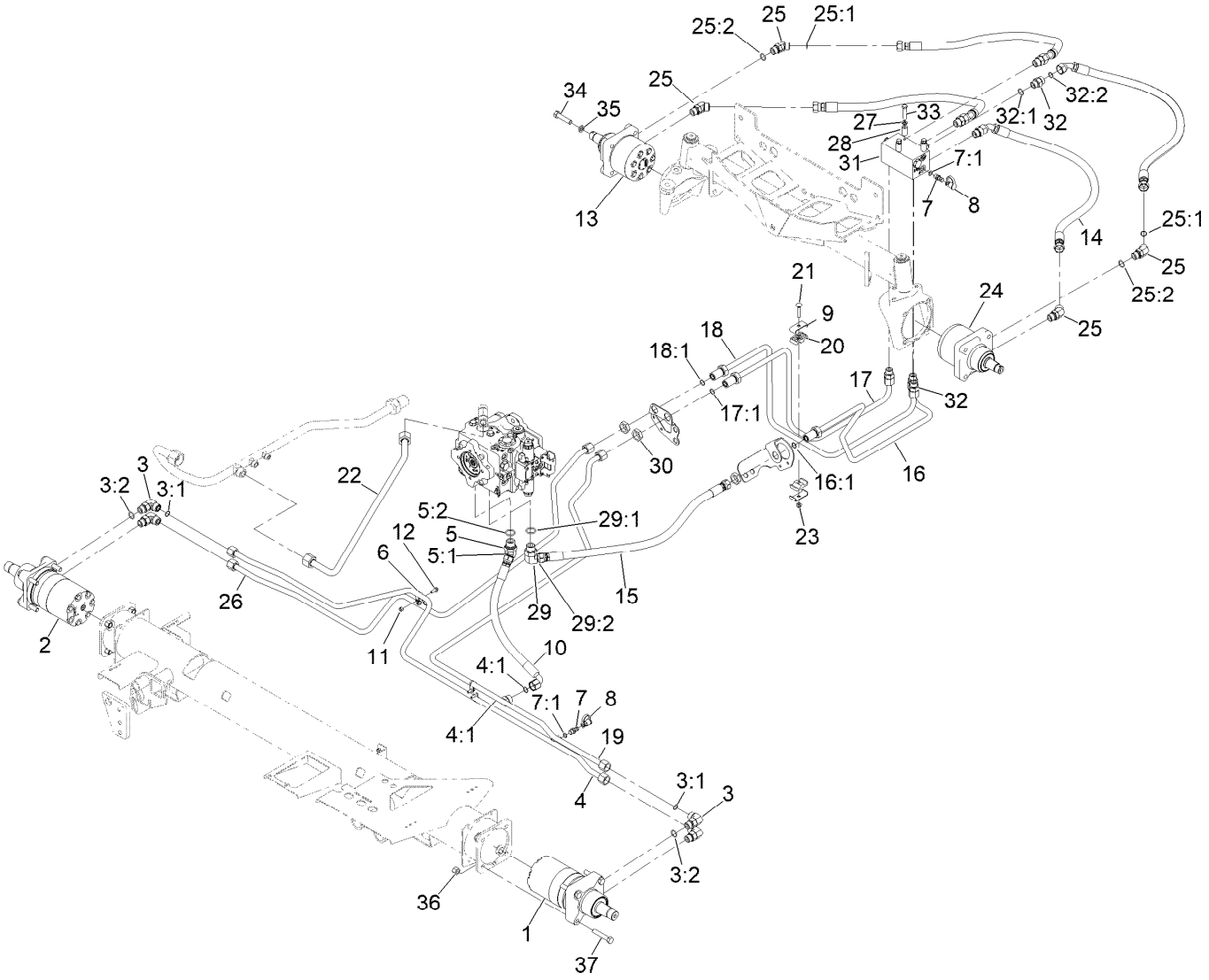

Traction Hydraulic Assembly (continued)

Ref.	Part Number	Qty.	Description
30	340-74	3	Nut-Lock, Bulkhead
31	108-1825	1	HYD Manifold ASM
32	340-7	7	Fitting-Straight
32:1	237-65	1	O-Ring
32:2	237-80	1	O-Ring

Ref.	Part Number	Qty.	Description
33	323-9	3	Screw-HH
34	325-9	8	Screw-HH
35	3253-7	8	Washer-Lock
36	3296-23	8	Nut-Lock, NI
37	325-11	8	Screw-HH

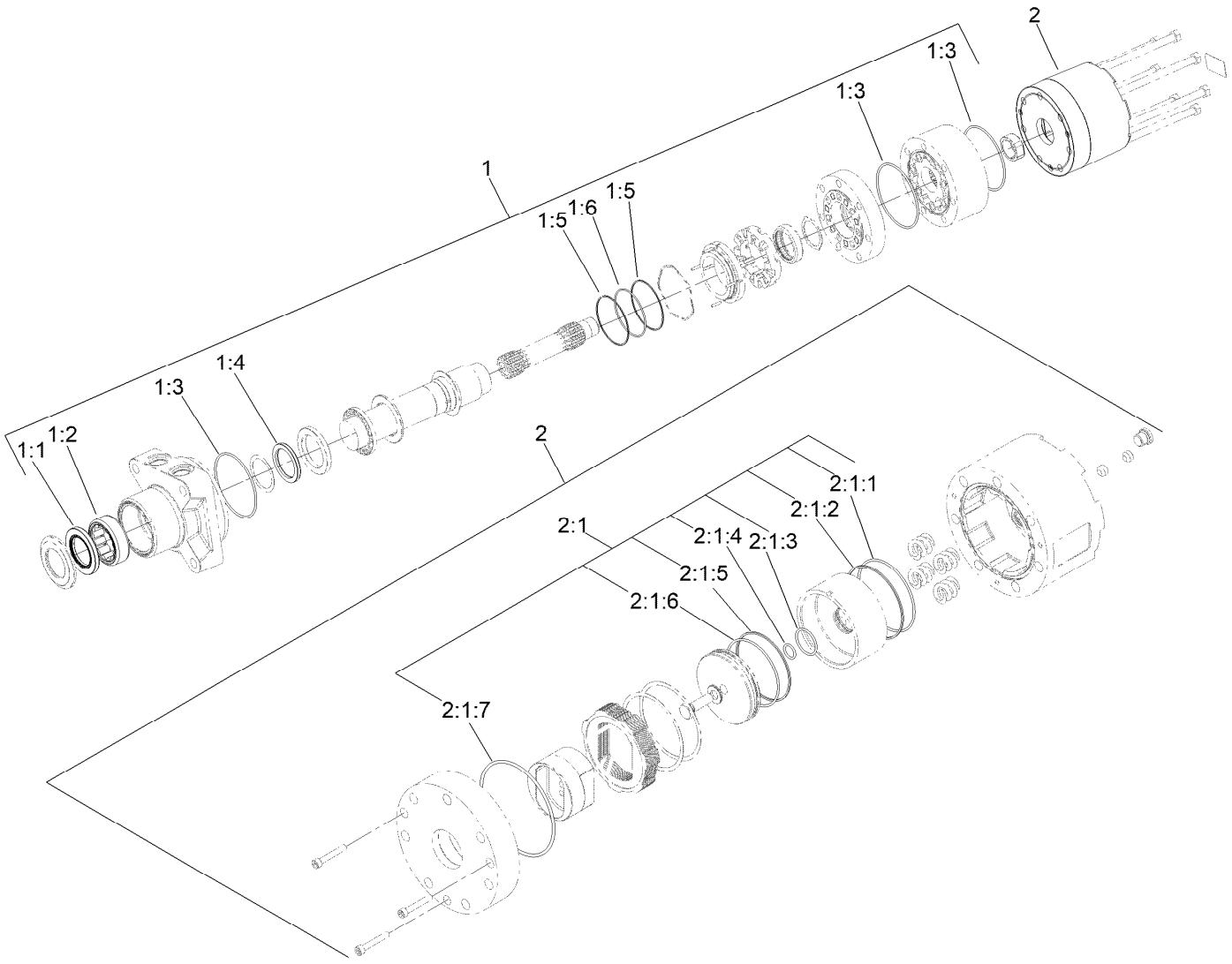

Hydraulic Motor Assembly No. 163-3542

Ref.	Part Number	Qty.	Description
1	161-7208	1	Seal Kit
1:1	161-7209	1	Seal, Grease
1:2	161-7210	1	Shell, Bearing
1:3	161-7211	3	O-Ring
1:4	161-7212	1	Shaft Seal (HP)
1:5	161-7213	2	Back-Up Ring
1:6	161-7214	1	O-Ring
2	163-2617	1	Brake Housing ASM
2:1	163-2627	1	Seal Kit-Brake ASM

Ref.	Part Number	Qty.	Description
2:1:1	161-8367	1	O-Ring
2:1:2	161-8368	1	Backup Ring
2:1:3	161-8369	1	O-Ring
2:1:4	161-8370	1	O-Ring
2:1:5	161-8371	1	Backup Ring
2:1:6	161-8372	1	O-Ring
2:1:7	161-7211	1	O-Ring
2:1:8	161-8373	1	O-Ring ●

● Not illustrated

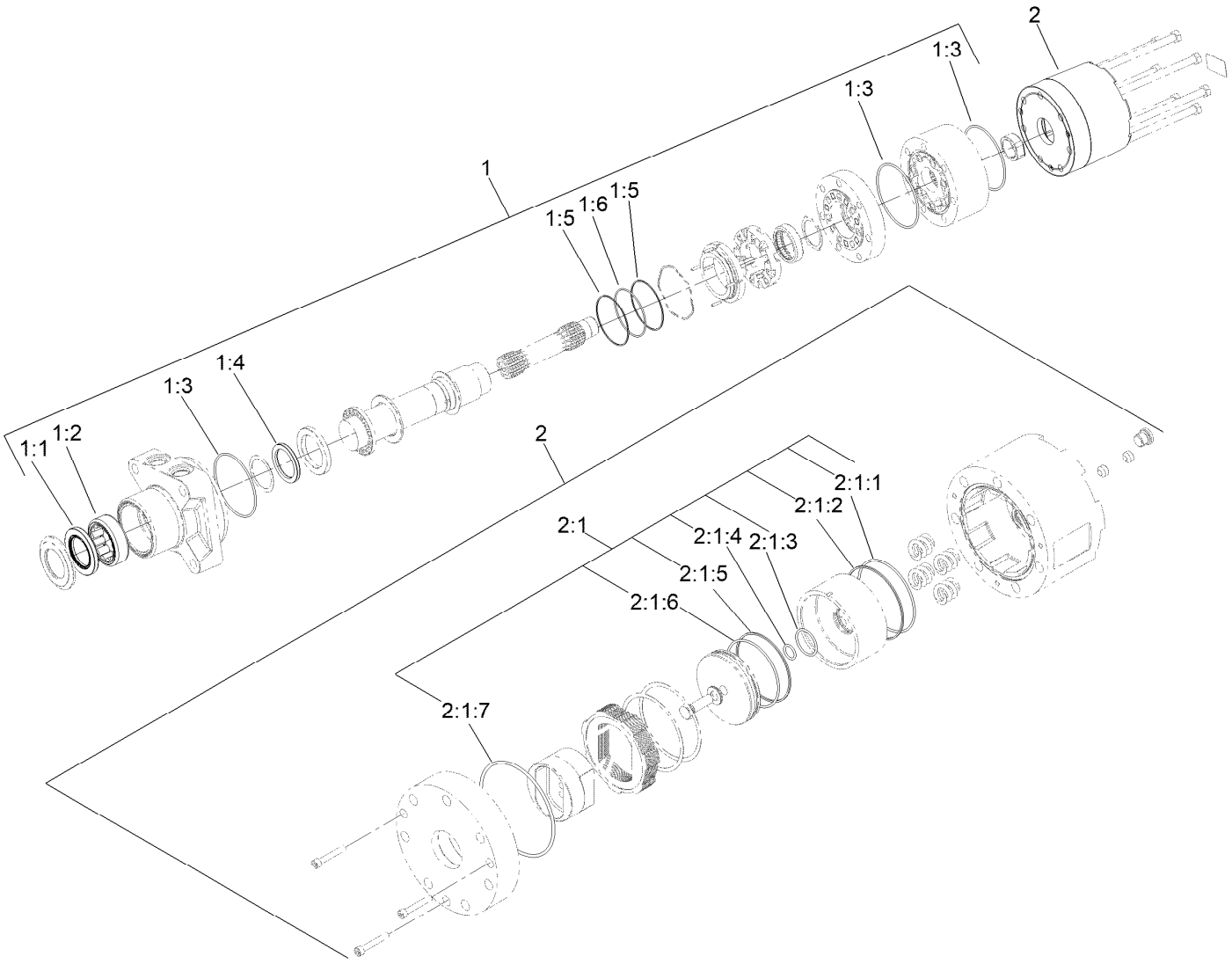

Hydraulic Motor Assembly No. 163-3543

Ref.	Part Number	Qty.	Description
1	161-7208	1	Seal Kit
1:1	161-7209	1	Seal, Grease
1:2	161-7210	1	Shell, Bearing
1:3	161-7211	3	O-Ring
1:4	161-7212	1	Shaft Seal (HP)
1:5	161-7213	2	Back-Up Ring
1:6	161-7214	1	O-Ring
2	163-2617	1	Brake Housing ASM
2:1	163-2627	1	Seal Kit-Brake ASM

Ref.	Part Number	Qty.	Description
2:1:1	161-8367	1	O-Ring
2:1:2	161-8368	1	Backup Ring
2:1:3	161-8369	1	O-Ring
2:1:4	161-8370	1	O-Ring
2:1:5	161-8371	1	Backup Ring
2:1:6	161-8372	1	O-Ring
2:1:7	161-7211	1	O-Ring
2:1:8	161-8373	1	O-Ring ●

● Not illustrated

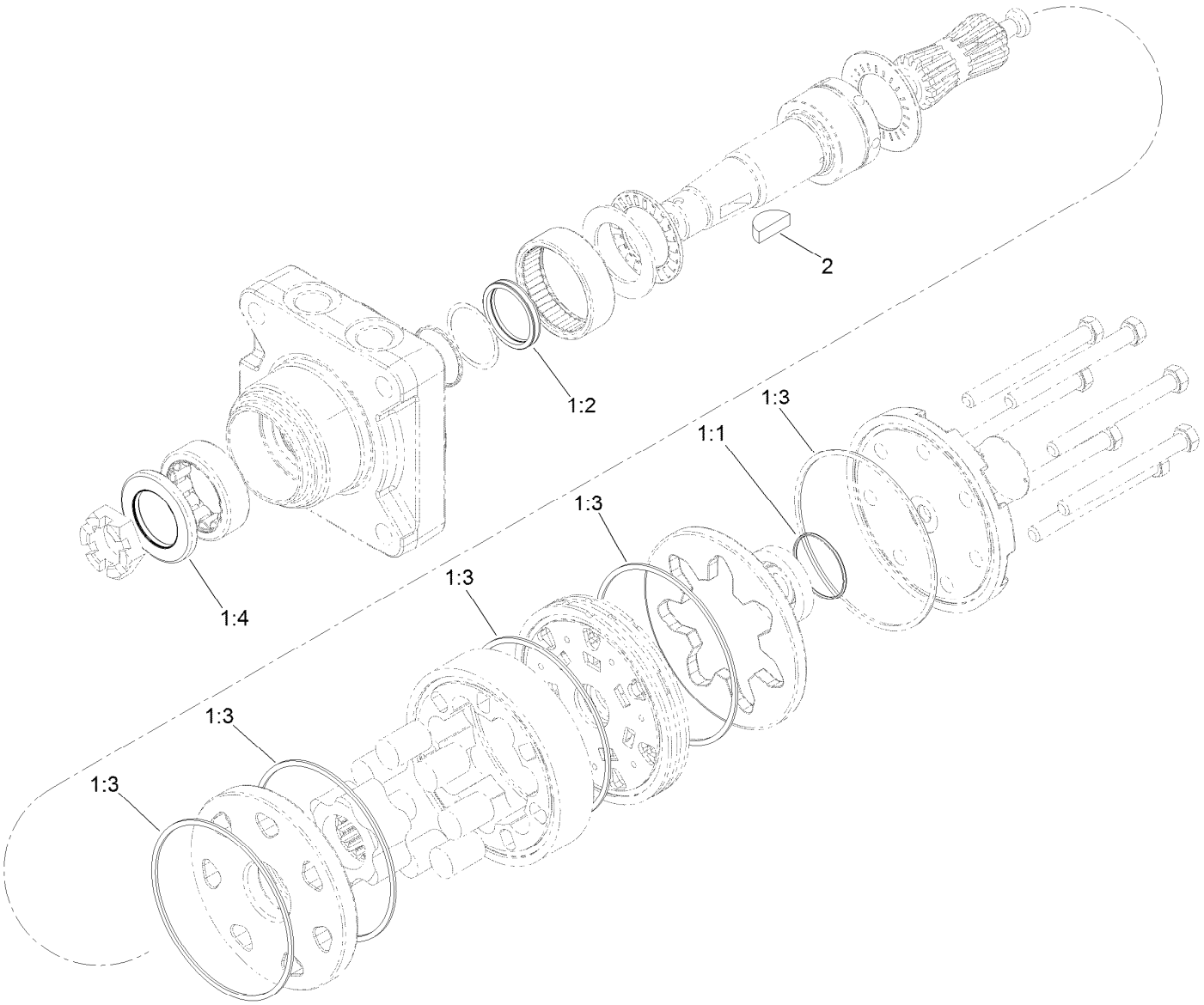

Hydraulic Motor Assembly No. 138-0436

Ref.	*Part Number*	*Qty.*	*Description*
1	110-8897	1	Seal Kit ●
1:1		1	Seal-Commutator, Vespel ■
1:2		1	Seal-Shaft ■
1:3		5	Seal-Body, Buna ■
1:4		1	Seal-Dirt / Water ■
2	3257-42	1	Key-Woodruff

● Not illustrated

■ Not serviced separately

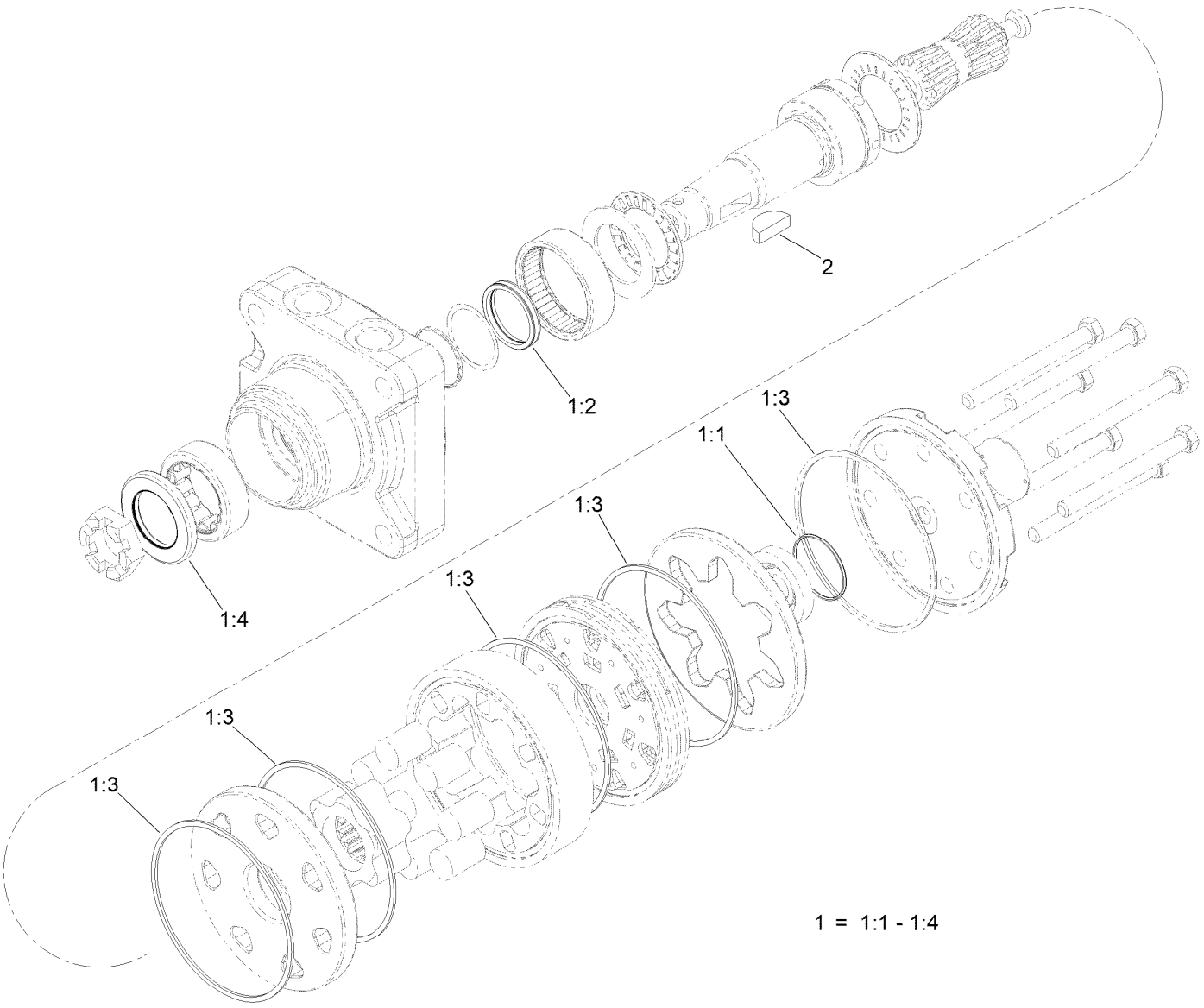

Hydraulic Motor Assembly No. 138-0435

Ref.	*Part Number*	*Qty.*	*Description*
1	110-8897	1	Seal Kit ●
1:1		1	Seal-Commutator, Vespel ■
1:2		1	Seal-Shaft ■
1:3		5	Seal-Body, Buna ■
1:4		1	Seal-Dirt / Water ■
2	3257-42	1	Key-Woodruff

● Not illustrated

■ Not serviced separately

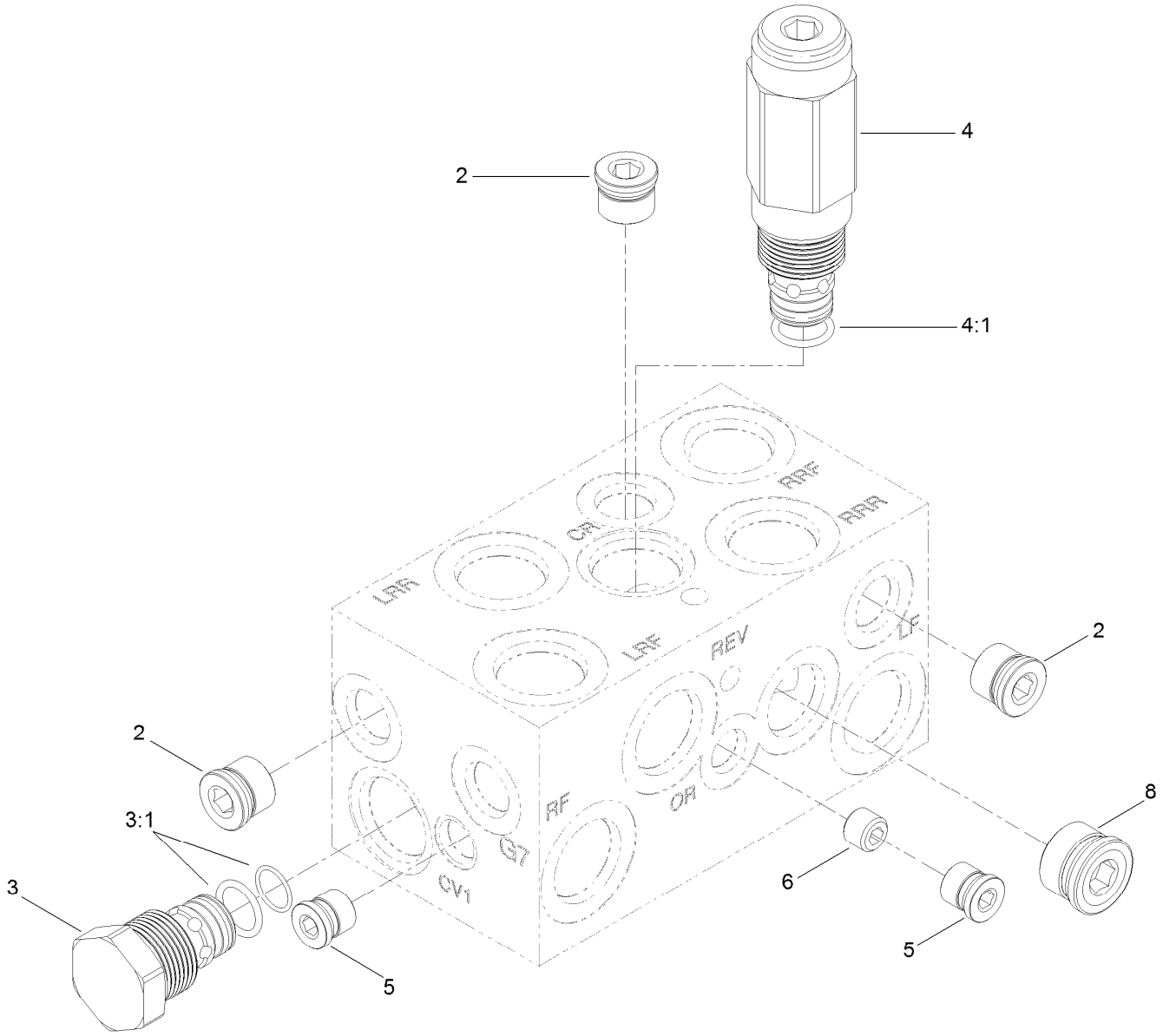

Four Wheel Drive Manifold Assembly No. 108-1825

Ref.	*Part Number*	*Qty.*	*Description*
2	106-1026	3	Plug-HYD
3	110-8881	2	Valve-Check
3:1	105-9159	1	Seal Kit ●
4	110-8882	1	Valve-Relief, Cross Over
4:1	110-6316	1	Seal Kit
5	106-1025	2	Plug-HYD
6	110-8883	1	Plug-Orifice (0.040)
8	106-1027	1	Plug

● Not illustrated

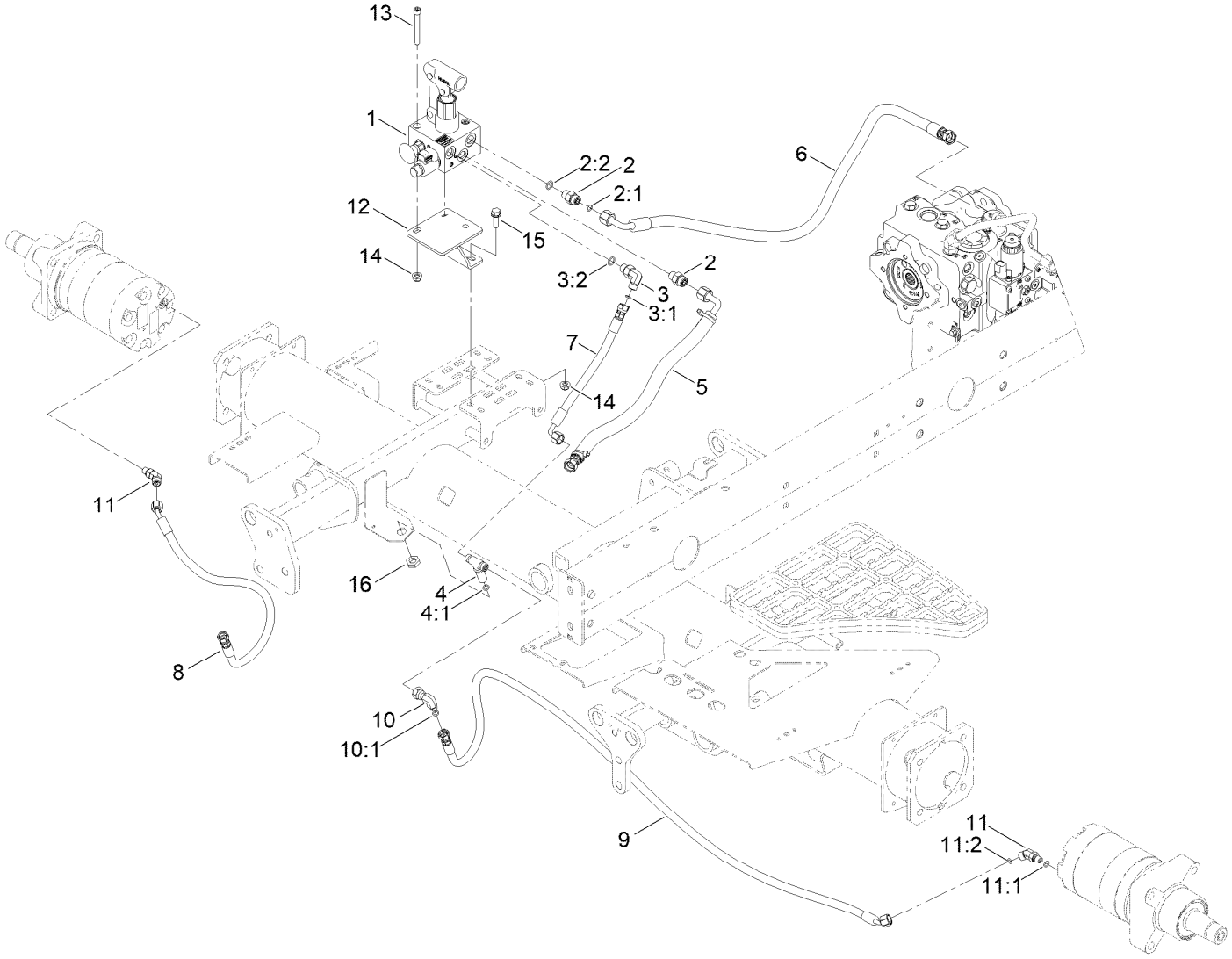

Hydraulic Brake Assembly

Ref.	Part Number	Qty.	Description
1	139-6046	1	Manifold-Brake Release
2	340-2	2	Fitting-Straight
2:1	237-22	1	O-Ring
2:2	237-42	1	O-Ring
3	340-82	1	Fitting-Elbow, 90 DEG
3:1	237-42	1	O-Ring
3:2	237-21	1	O-Ring
4	140-7452	1	Fitting-Tee, Bulkhead
4:1	237-21	3	O-Ring
5	163-3508	1	Hose ASM-HYD
6	145-2455	1	Hose ASM-Hydraulic
7	121-4455	1	Hose-HYD
8	145-2599	1	Hose ASM-HYD HP

Ref.	Part Number	Qty.	Description
9	115-2029	1	HYD Hose ASM
10	92-2745	1	Elbow-90
10:1	237-21	1	O-Ring
11	340-103	2	Fitting-HYD, 45 DEG
11:1	237-78	1	O-Ring
11:2	237-21	1	O-Ring
12	145-2459-03	1	Mount - Brake Release [black]
13	3274-40	3	Screw-HSH
14	119-4041	5	Nut-HF
15	3234-29	2	Screw-HHF
16	340-78	1	Nut-Lock

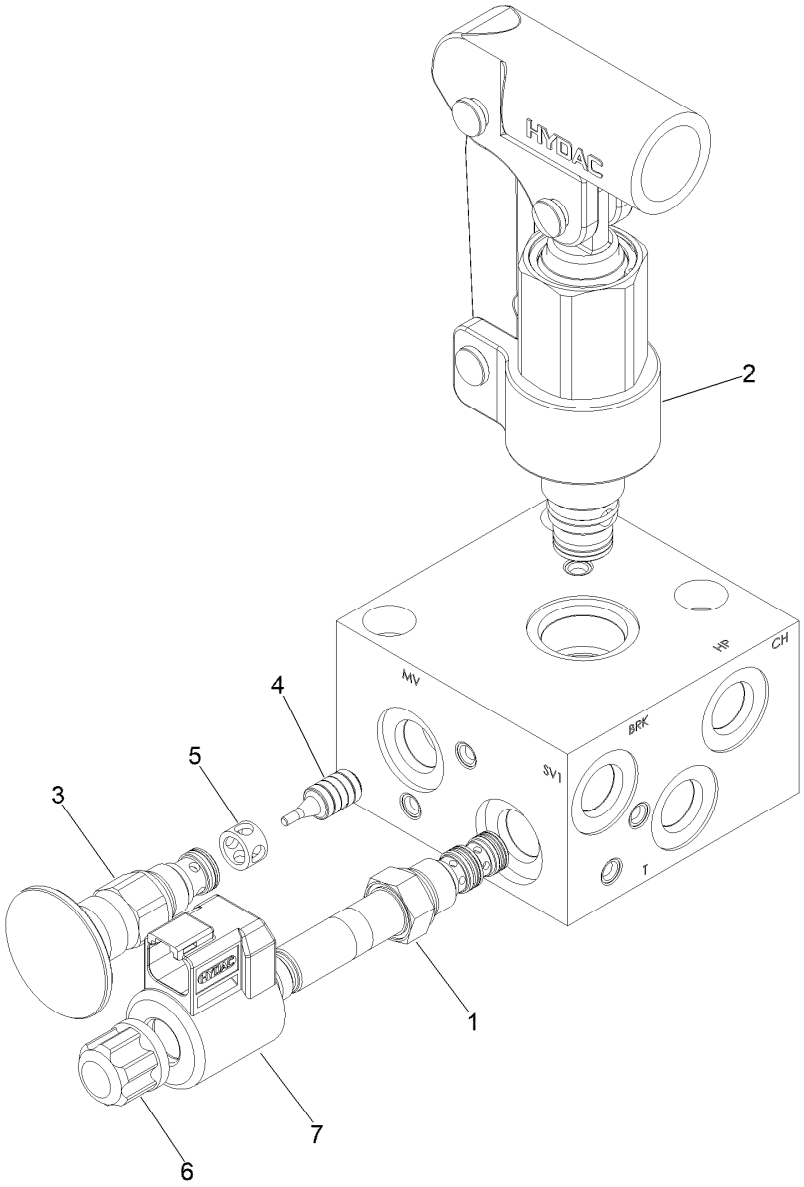

Brake Release Manifold Assembly No. 139-6046

Ref.	*Part Number*	*Qty.*	*Description*
1	145-2563	1	Directional Valve, 3W/2P
2	145-2564	1	Hand Pump
3	145-2565	1	Manual Valve, N.O.
4	145-2566	1	Pilot Piston Assy, Rvs06
5	145-2567	1	Spacer
6	145-2569	1	Coil Nut, Tall (06 Valves)
S1	145-2568	1	Coil 12Dn01-32-1329

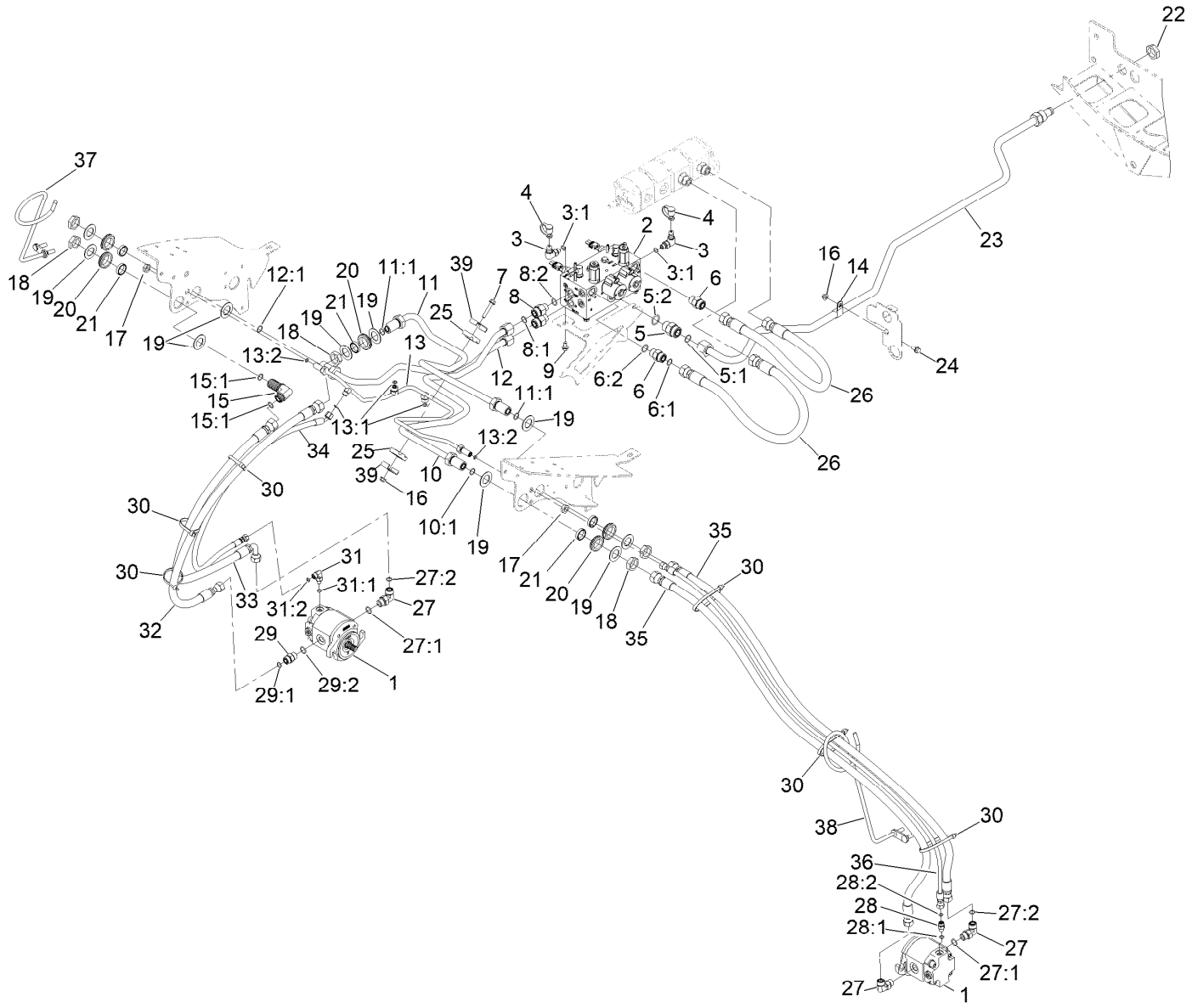

No. 1, 4 and 5 Reel Drive Hydraulic Assembly

Ref.	Part Number	Qty.	Description
1	120-6272	3	HYD Motor ASM
2	121-5628	1	Hydraulic Manifold ASM
3	59-7410	2	Fitting-Diagnostic
3:1	237-42	1	O-Ring
4	354-79	2	Cap-Dust
5	340-9	1	Fitting-STR
5:1	237-58	1	O-Ring
5:2	237-81	1	O-Ring
6	340-7	2	Fitting-Straight
6:1	237-65	1	O-Ring
6:2	237-80	1	O-Ring
7	94-5780	1	Screw-HWH
8	340-155	2	Fitting-Straight
8:1	237-79	1	O-Ring
8:2	237-151	1	O-Ring
9	3234-14	3	Screw-HHF
10	145-2530	1	Hydraulic Tube ASM
10:1	237-65	1	O-Ring
11	117-0137	1	Tube ASM
11:1	237-65	2	O-Ring
12	145-2529	1	Hydraulic Tube ASM

Ref.	Part Number	Qty.	Description
12:1	237-65	1	O-Ring
13	163-3513	1	Hydraulic Tube ASM
13:1	237-22	2	O-Ring
13:2	237-21	3	O-Ring
14	2412-4	1	Clamp-R
15	340-72	1	Fitting-Bulkhead, 90 DEG
15:1	237-65	2	O-Ring
16	119-4041	2	Nut-HF
17	340-78	2	Nut-Lock
18	340-74	5	Nut-Lock, Bulkhead
19	69-9010	10	Washer
20	240-3	5	Grommet-Rubber
21	125-1984	5	Spacer
22	340-126	1	Nut-Bulkhead
23	108-1700	1	Tube ASM
24	3234-5	1	Screw-HHF
25	56-7970	2	Clamp-Tube
26	108-1686	2	Hose-HYD
27	340-98	5	Fitting-Elbow, 90 DEG
27:1	237-79	1	O-Ring
27:2	237-30	1	O-Ring

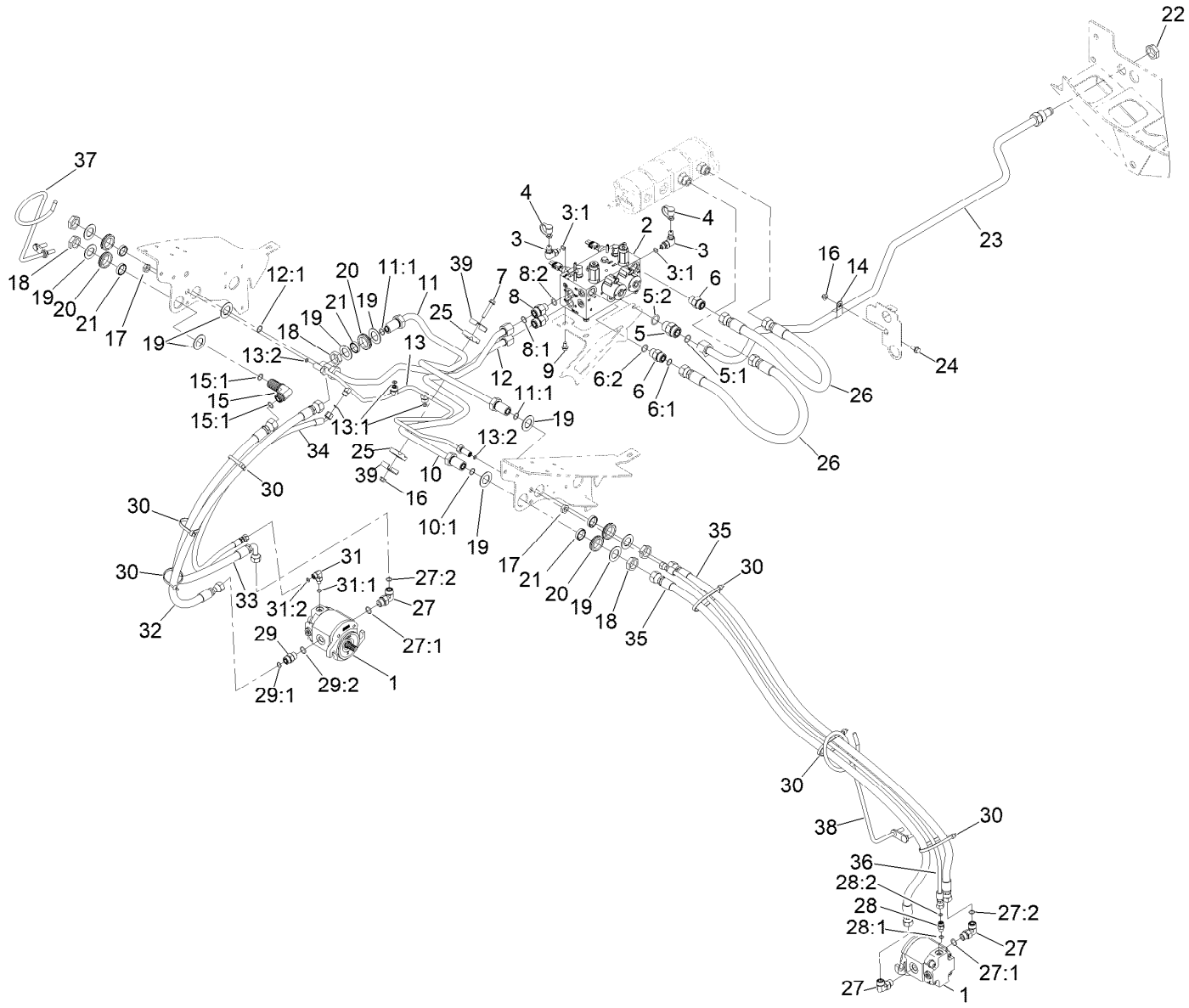

No. 1, 4 and 5 Reel Drive Hydraulic Assembly (continued)

Ref.	Part Number	Qty.	Description
28	340-92	2	Fitting-Straight
28:1	237-78	1	O-Ring
28:2	237-21	1	O-Ring
29	340-4	1	Fitting-Straight
29:1	237-30	1	O-Ring
29:2	237-79	1	O-Ring
30	3334-945	9	Tie-Cable
31	340-132	1	Fitting-Elbow, 90 DEG
31:1	237-78	1	O-Ring
31:2	237-21	1	O-Ring
32	114-0633	1	Hose-HYD
33	117-5190	1	Hose-HYD
34	140-7456	1	Hose ASM
35	117-5188	4	Hose-HYD
36	106-3680	2	Hose-HYD
37	139-5995	1	Guide-Hose, RH
38	139-5996	1	Hose Guide ASM-LH
39	119-1419	2	Plate-Clamp

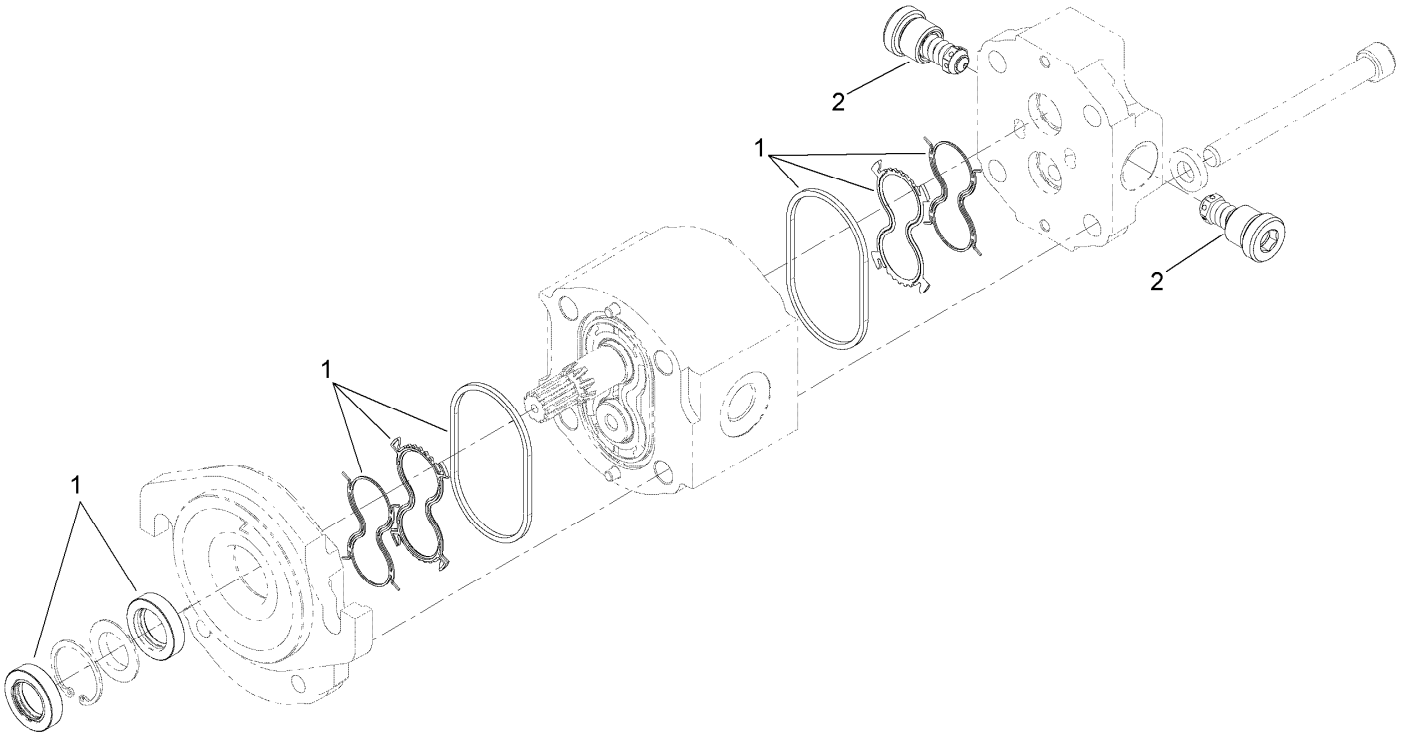

Hydraulic Motor Assembly No. 120-6272

Ref.	*Part Number*	*Qty.*	*Description*
1	145-2786	1	Seal Kit
2	117-5107	1	Valve-Check

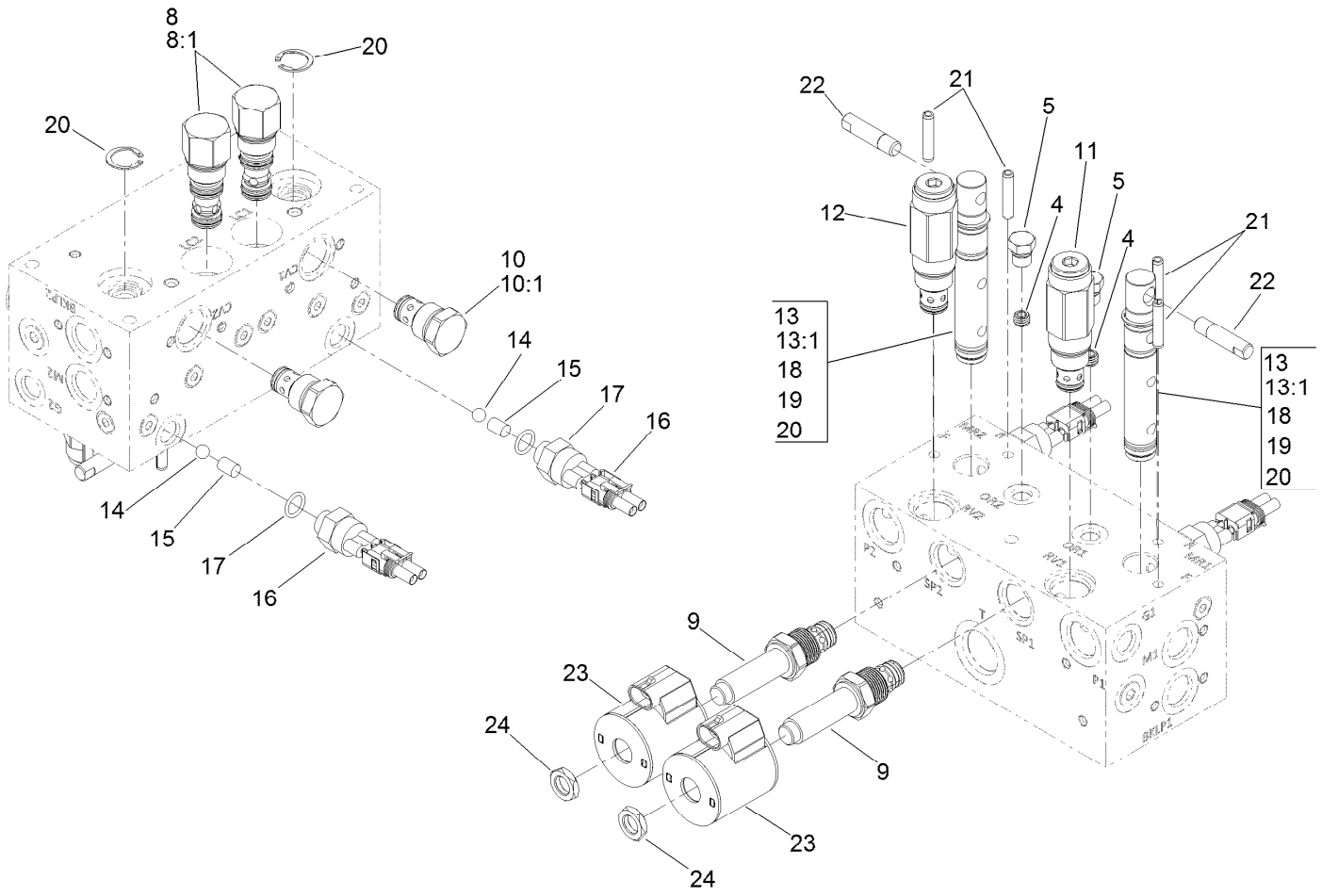

Manifold Assembly No. 121-5628

Ref.	Part Number	Qty.	Description
4	110-8883	1	Plug-Orifice (0.040)
5	117-0115	1	Plug
8	120-1693	2	Compensator-Pressure
8:1	119-2159	1	Seal Kit
9	138-6961	2	Valve-Proportional, NC
10	110-8881	2	Valve-Check
10:1	105-9159	1	Seal Kit ●
11	138-6962	1	Valve-Relief, 2500 PSI
12	138-6963	1	Valve-Relief, 3500 PSI
13	117-0108	2	Spool-Rotary
13:1	117-0109	1	Seal Kit

Ref.	Part Number	Qty.	Description
14	117-4605	2	Ball-SS
15	120-1650	2	Pin
16	72-4310	2	Switch-Ball
17	110-8757	2	O-Ring
18	117-4606	6	O-Ring
19	112-6534	4	Ring-Back Up
20	112-6532	4	Ring-Retaining
21	112-6531	4	Pin-Spring
22	110-8758	2	Handle-Spool
23	110-6344	2	Coil-12V, DC
24	110-2634	2	Nut-Coil

● Not illustrated

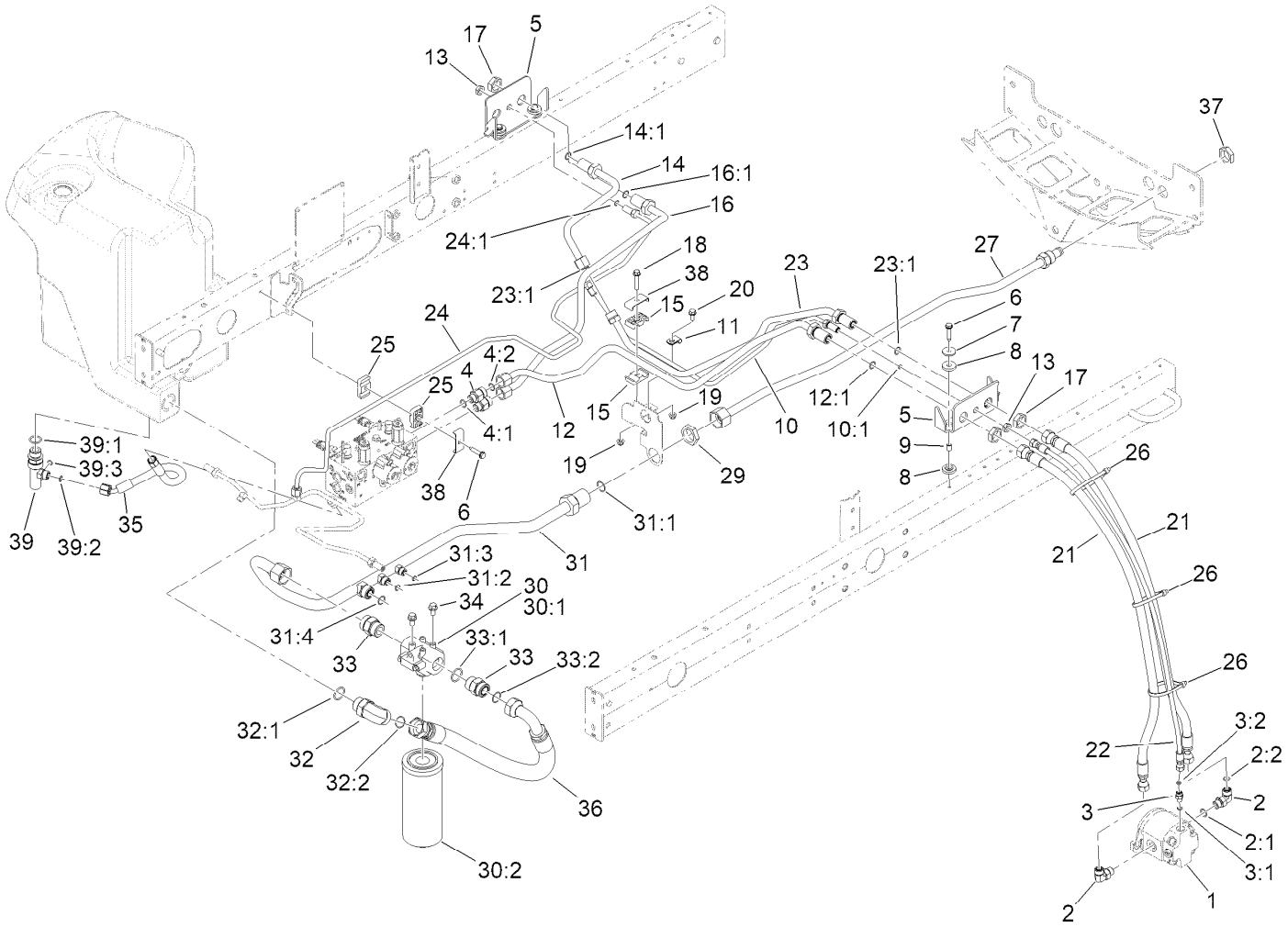

No. 2 and 3 Reel Drive Hydraulic Assembly

Ref.	Part Number	Qty.	Description
1	120-6272	2	HYD Motor ASM
2	340-98	4	Fitting-Elbow, 90 DEG
2:1	237-79	1	O-Ring
2:2	237-30	1	O-Ring
3	340-92	2	Fitting-Straight
3:1	237-78	1	O-Ring
3:2	237-21	1	O-Ring
4	340-155	2	Fitting-Straight
4:1	237-79	1	O-Ring
4:2	237-151	1	O-Ring
5	117-0174-03	2	Bracket-Bulkhead
6	32144-57	5	Screw-Thd Roll
7	105-3048	4	Washer-Flat
8	240-11	8	Bushing-Flange
9	99-8611	4	Spacer
10	145-2532	1	Hydraulic Tube ASM
10:1	237-21	1	O-Ring
11	2412-113	1	Clamp-R

Ref.	Part Number	Qty.	Description
12	145-2528	1	Hydraulic Tube ASM
12:1	237-65	1	O-Ring
13	340-78	2	Nut-Lock
14	117-0140	1	Tube ASM
14:1	237-65	1	O-Ring
15	56-7971	2	Clamp-Tube
16	145-2527	1	Hydraulic Tube ASM
16:1	237-65	1	O-Ring
17	340-74	4	Nut-Lock, Bulkhead
18	94-5780	1	Screw-HWH
19	119-4041	2	Nut-HF
20	3234-5	1	Screw-HHF
21	114-0633	4	Hose-HYD
22	98-4590	2	Hose-HYD
23	117-0177	1	Tube ASM
23:1	237-65	2	O-Ring
24	145-2533	1	Hydraulic Tube ASM
24:1	237-21	1	O-Ring

● Not illustrated

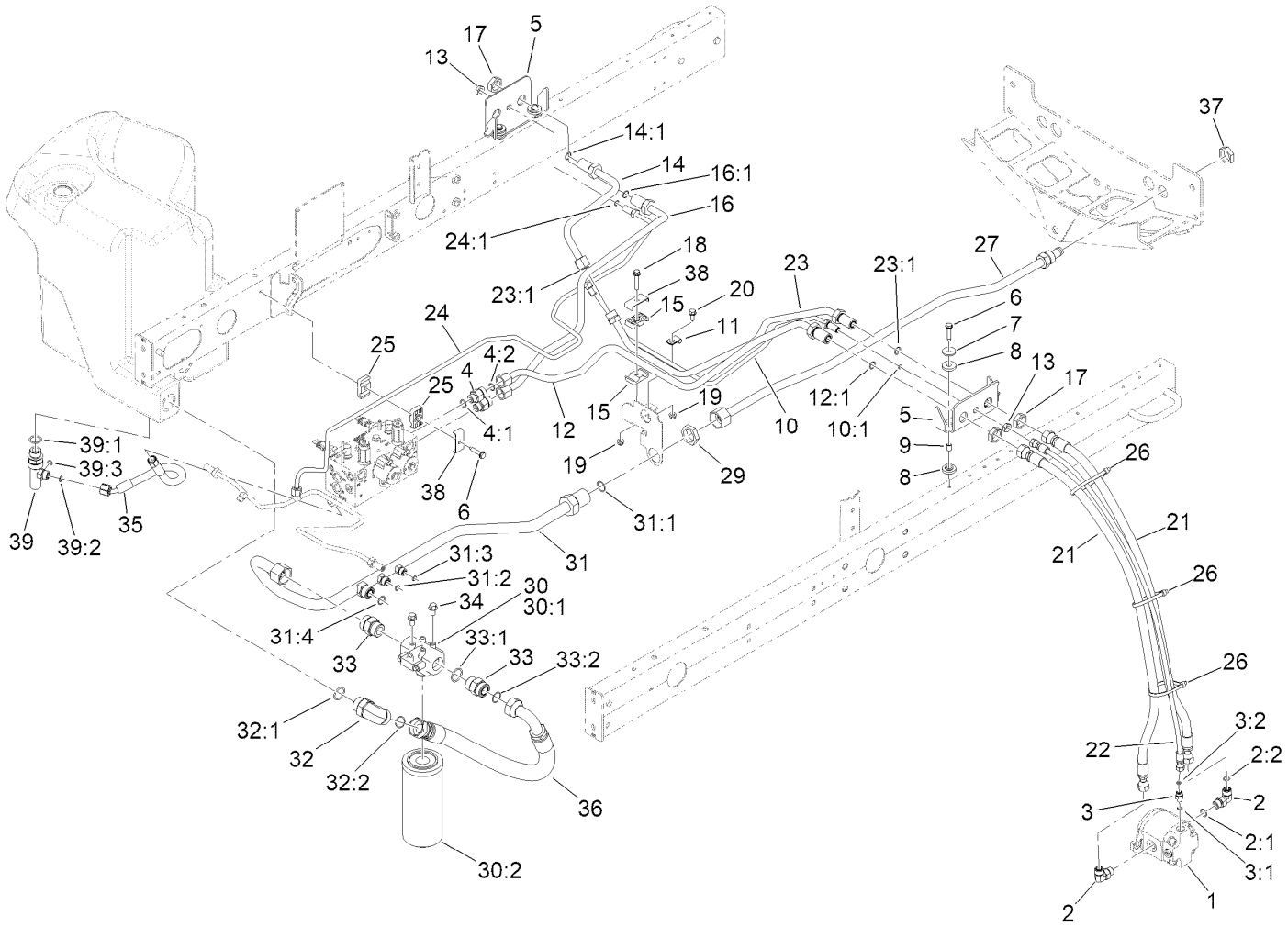

No. 2 and 3 Reel Drive Hydraulic Assembly (continued)

Ref.	Part Number	Qty.	Description
24:2	237-22	1	O-Ring ●
25	56-7972	2	Clamp-Tube
26	3334-945	6	Tie-Cable
27	108-1691	1	Tube ASM
29	340-128	1	Nut-Bulkhead
30	98-3923	1	Oil Filter ASM
30:1	104-0080	1	Filter Head ASM
30:2	94-2621	1	Element-Filter
31	144-2055	1	Tube ASM-Hydraulic
31:1	340-65	1	O-Ring
31:2	237-30	1	O-Ring
31:3	237-22	1	O-Ring
31:4	237-58	1	O-Ring
32	340-129	1	Fitting-Elbow, 90 DEG

Ref.	Part Number	Qty.	Description
32:1	237-146	1	O-Ring
32:2	340-65	1	O-Ring
33	104-3797	2	Fitting-Straight
33:1	237-146	1	O-Ring
33:2	340-65	1	O-Ring
34	3234-1	2	Screw-HHF
35	163-3514	1	Hose ASM-HYD
36	108-1689	1	Hose-HYD
37	340-126	1	Nut-Bulkhead
38	119-1419	2	Plate-Clamp
39	144-2080	1	Fitting-Manifold
39:1	237-81	1	O-Ring
39:2	237-30	1	O-Ring
39:3	237-22	1	O-Ring

● Not illustrated

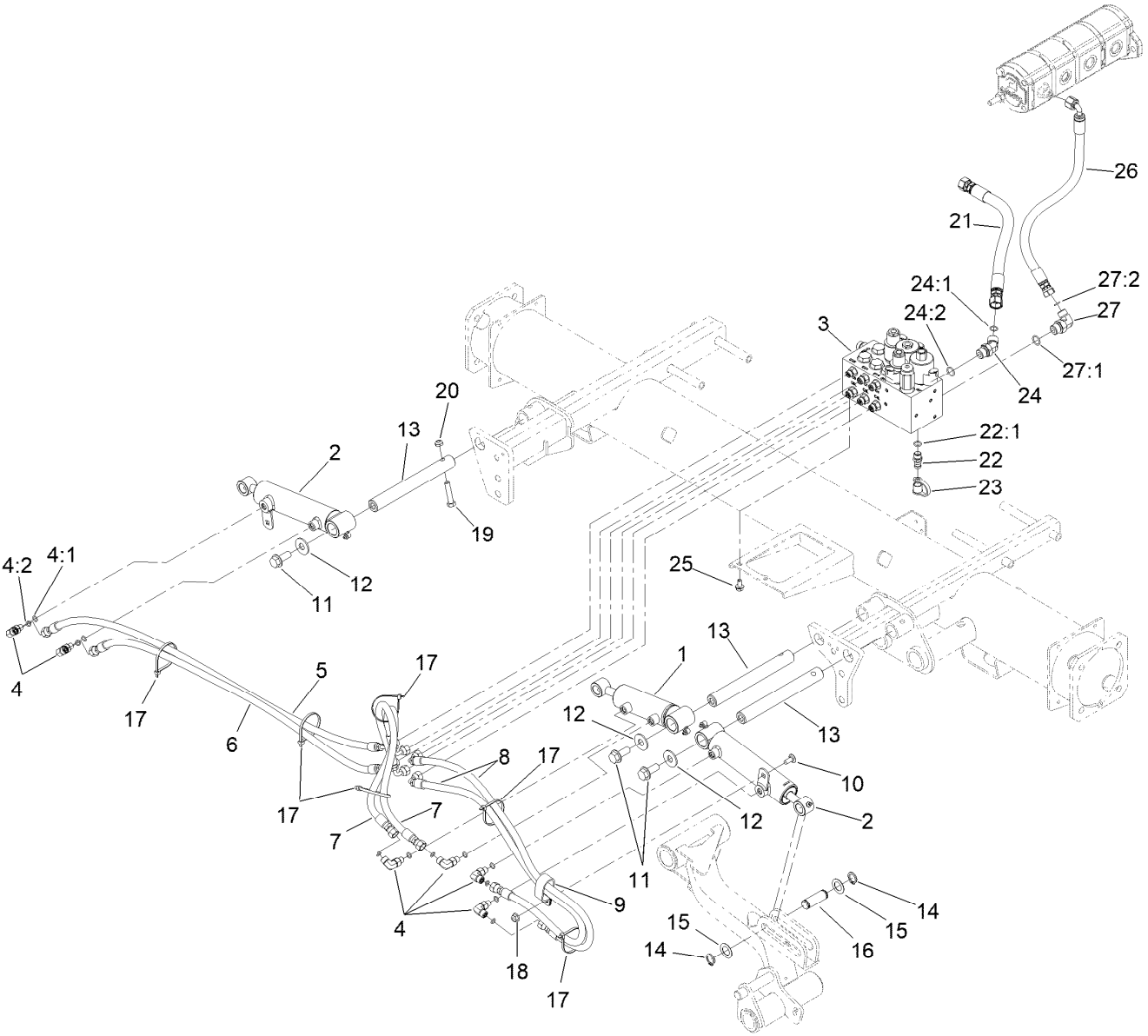

No. 1, 4 and 5 Lift Arm Hydraulic Assembly

Ref.	Part Number	Qty.	Description
1	163-2624	1	Cylinder-Hydraulic
2	163-3534	2	Cylinder-Hydraulic
3	105-7577	1	HYD Lift Block Manifold ASM
4	340-132	6	Fitting-Elbow, 90 DEG
4:1	237-78	1	O-Ring
4:2	237-21	1	O-Ring
5	106-3692	1	Hose-HYD
6	106-3693	1	Hose-HYD
7	93-6887	2	Hose-HYD
8	85-4940	2	Hose-HYD
9	2412-137	1	Clamp-R, Double
10	137-3061	1	Bolt-CARR
11	3234-38	3	Screw-HHF
12	3256-6	3	Washer-Flat
13	117-0148	3	Pin-Cylinder
14	32120-93	6	Ring-Retaining
15	3-6498	6	Washer-Thrust
16	104-0046	3	Pin-Slide, Cylinder
17	3290-379	6	Tie-Cable
18	119-4041	1	Nut-HF
19	323-9	3	Screw-HH
20	3296-59	3	Nut-Lock, NI
21	117-0729	1	Hose ASM
22	59-7410	1	Fitting-Diagnostic
22:1	237-42	1	O-Ring
23	354-79	1	Cap-Dust
24	340-101	1	Fitting-HYD, 45 DEG
24:1	237-30	1	O-Ring
24:2	237-79	1	O-Ring
25	3234-14	2	Screw-HHF
26	145-2585	1	Hose ASM-HYD
27	340-18	1	Fitting-HYD, 90 DEG
27:1	237-79	1	O-Ring
27:2	237-22	1	O-Ring

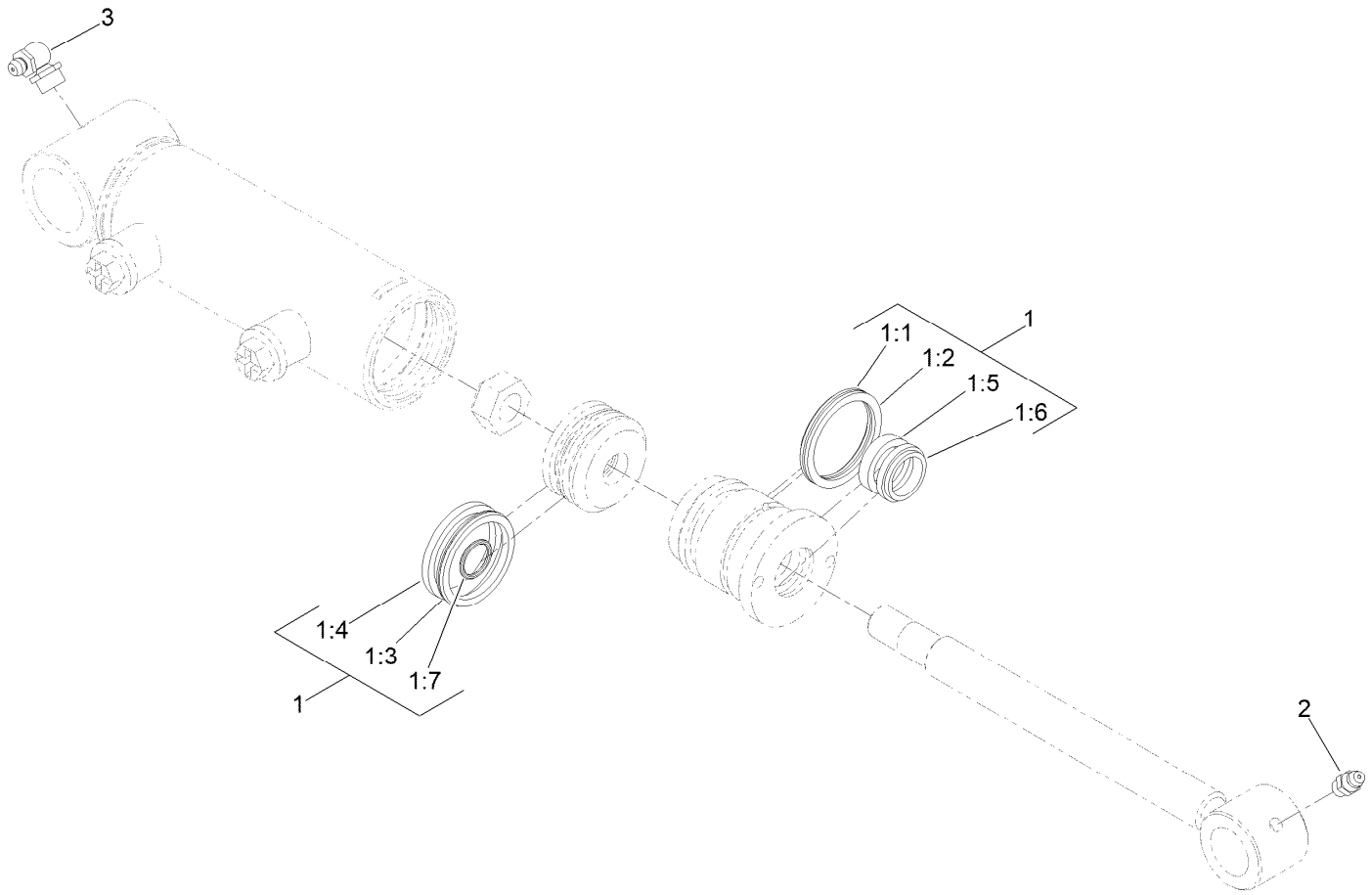

Hydraulic Cylinder Assembly No. 163-2624

Ref.	*Part Number*	*Qty.*	*Description*
1	163-3529	1	Seal Kit
1:1		1	O-Ring ●
1:2		1	Backup ●
1:3		1	Pps Seal ●
1:4		1	Wear Ring-Ht ●
1:5		1	Bt Seal ●
1:6		1	Dust Seal-Dt ●
1:7		1	O-Ring ●
2	302-5	1	Fitting-Grease
3	302-33	1	Fitting-Grease

● Not serviced separately

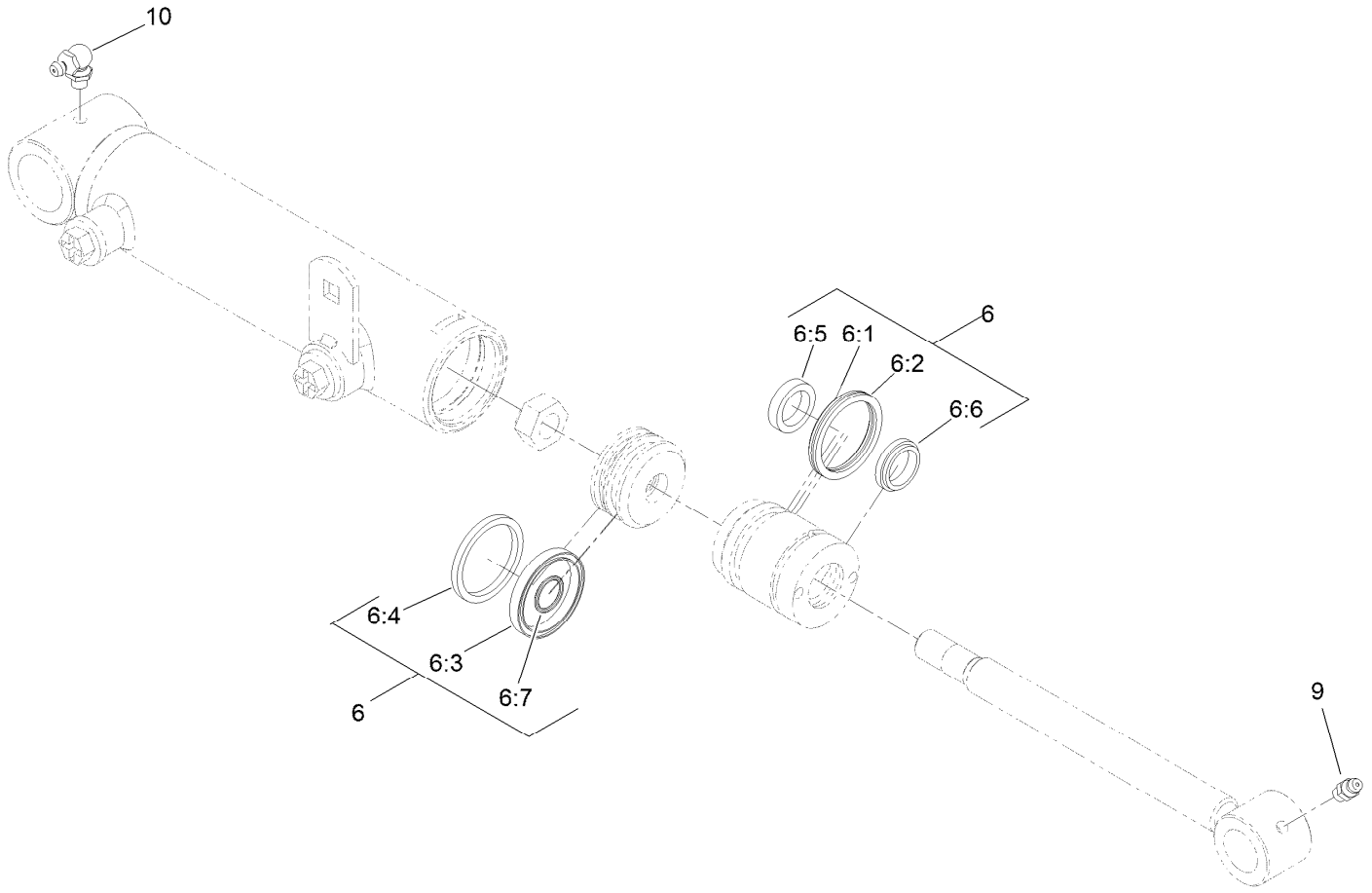

Hydraulic Cylinder Assembly No. 163-3534

Ref.	*Part Number*	*Qty.*	*Description*
6	163-3529	1	Seal Kit
6:1		1	O-Ring ●
6:2		1	Backup ●
6:3		1	Pps Seal ●
6:4		1	Wear Ring-Ht ●
6:5		1	Bt Seal ●
6:6		1	Dust Seal-Dt ●
6:7		1	O-Ring ●
9	302-5	1	Fitting-Grease
10	302-60	1	Fitting-Grease

● Not serviced separately

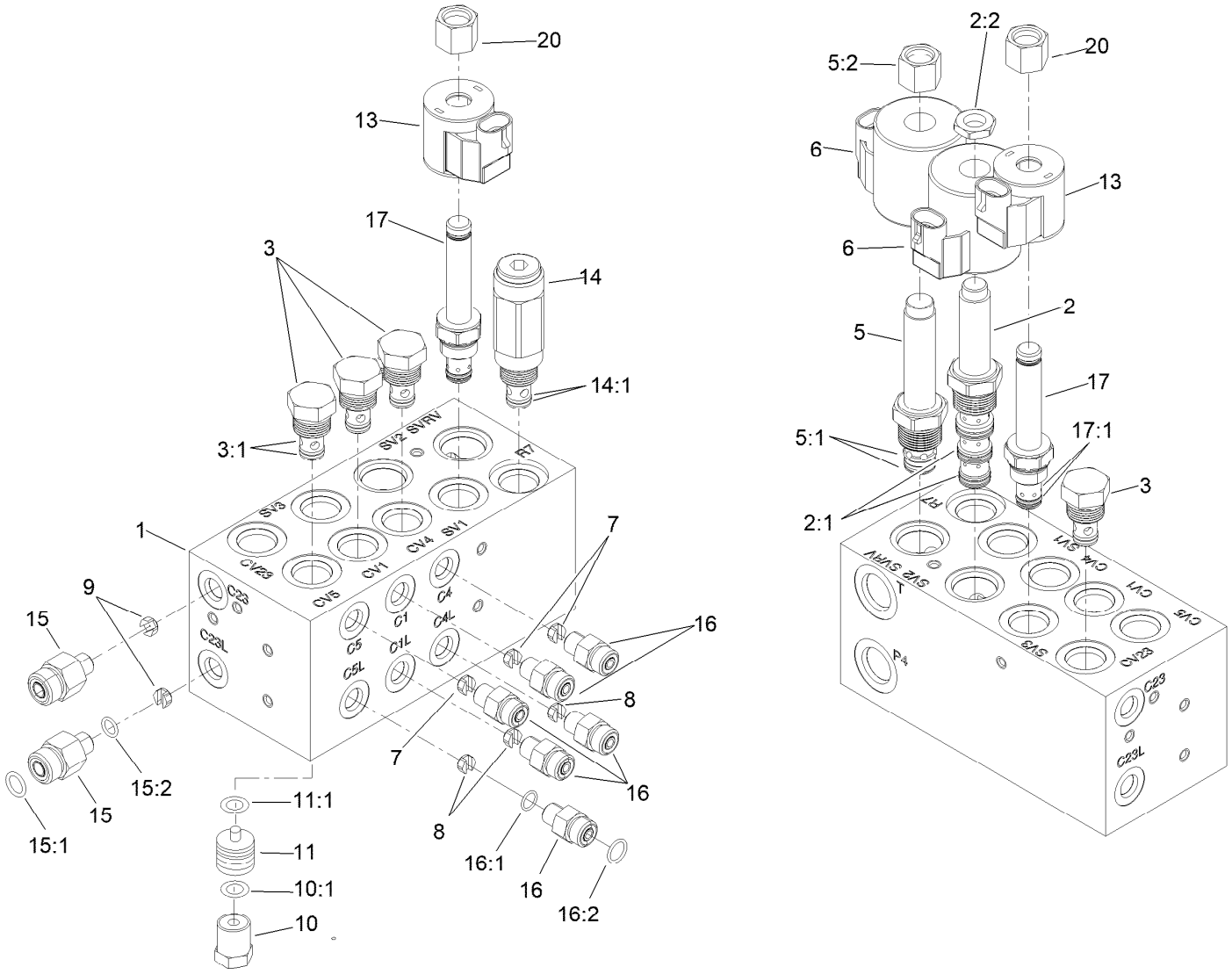

Hydraulic Manifold Block Assembly No. 105-7577

Ref.	Part Number	Qty.	Description
1		1	Block-Manifold ●
2	110-8906	1	Valve-Solenoid
2:1	110-8908	1	Spool Valve Seal Kit
2:2	110-2634	1	Nut-Coil
3	110-9006	4	Valve-Check
3:1	105-9156	1	Seal Kit
5	110-8905	1	Valve-Relief, Solenoid
5:1	110-6316	1	Seal Kit
5:2	130-8180	1	Nut-Coil (9/16-24 Unef-2B)
6	110-6344	2	Coil-12V, DC
7	110-8904	3	Orifice-Control, Flow (0.028)
8	110-8903	3	Orifice-Control, Flow (0.055)
9	110-8902	2	Orifice-Control, Flow (0.046)
10	354-70	4	Plug-Hex, Hollow
10:1	237-80	1	O-Ring

Ref.	Part Number	Qty.	Description
11	110-8901	4	Piston-Pilot
11:1	110-8900	1	O-Ring
13	110-0497	2	Coil-Solenoid
14	110-8899	1	Valve-Relief
14:1	105-9156	1	Seal Kit
15	340-88	2	Fitting-Straight
15:1	237-22	1	O-Ring
15:2	237-78	1	O-Ring
16	340-92	6	Fitting-Straight
16:1	237-78	1	O-Ring
16:2	237-21	1	O-Ring
17	147-3090	2	Valve-Solenoid
17:1	107-7527	1	Seal Kit
20	107-7812	2	Nut-Solenoid

● Not serviced separately

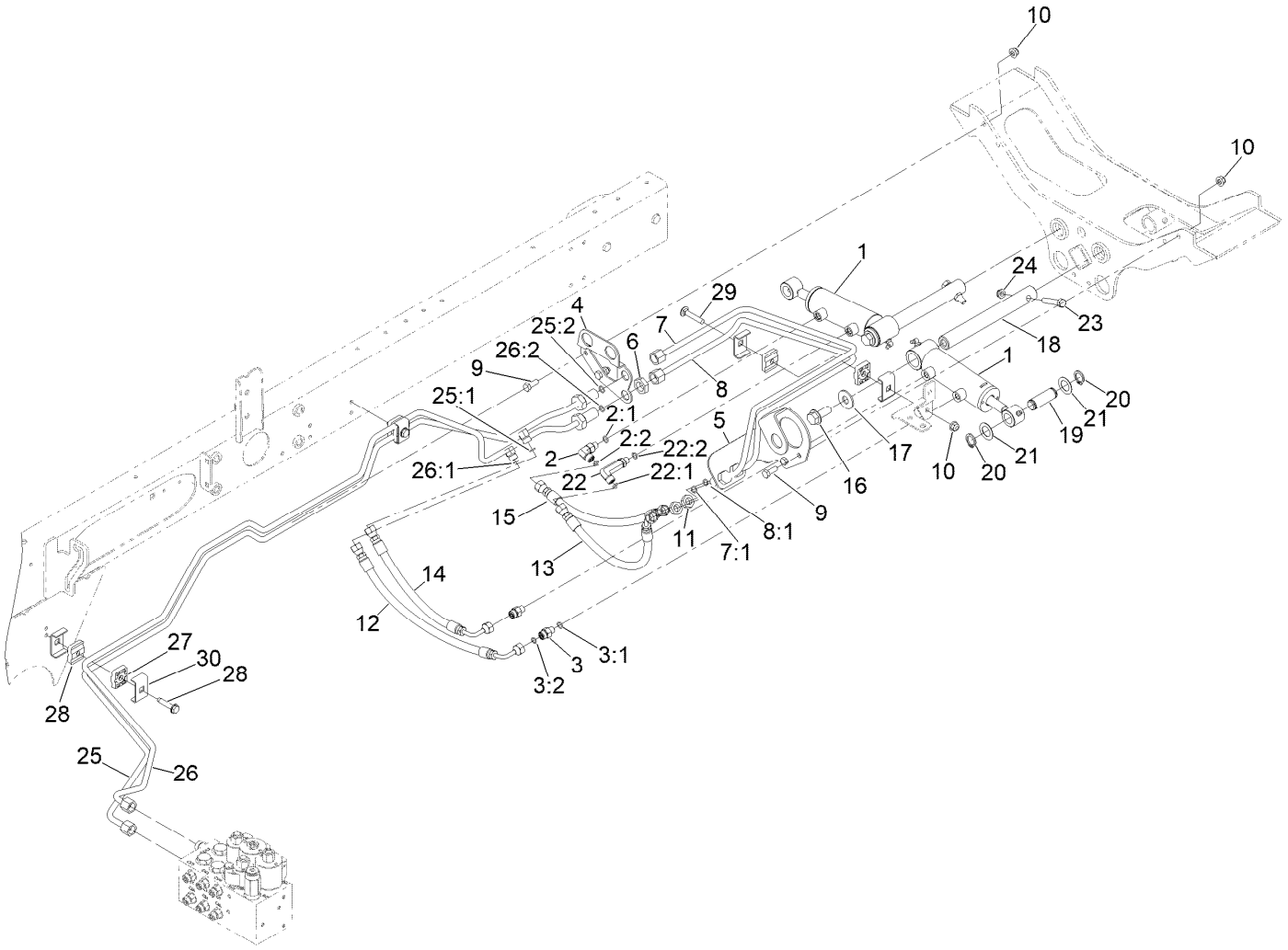

Rear Lift Hydraulic Assembly

Ref.	Part Number	Qty.	Description
1	163-2624	2	Cylinder-Hydraulic
2	340-132	1	Fitting-Elbow, 90 DEG
2:1	237-78	1	O-Ring
2:2	237-21	1	O-Ring
3	340-92	2	Fitting-Straight
3:1	237-78	1	O-Ring
3:2	237-21	1	O-Ring
4	120-3782-0P	1	Brkt-Bulhead, RH
5	110-0917-0P	1	Bracket-Bulkhead, LH
6	340-70	2	Nut-Lock
7	133-2987	1	Tube-ASM
7:1	237-21	1	O-Ring
8	133-2986	1	Tube-ASM
8:1	237-21	1	O-Ring
9	322-4	4	Screw-HH
10	119-4041	5	Nut-HF
11	340-78	2	Nut-Lock
12	110-0930	1	Hose-HYD
13	110-8966	1	Hose-HYD
14	110-0929	1	Hose-HYD
15	110-0931	1	Hose-HYD

Ref.	Part Number	Qty.	Description
16	3234-38	2	Screw-HHF
17	3256-6	2	Washer-Flat
18	117-0148	2	Pin-Cylinder
19	104-0046	2	Pin-Slide, Cylinder
20	32120-93	4	Ring-Retaining
21	3-6498	4	Washer-Thrust
22	100-7695	1	Fitting-Elbow 90
22:1	237-78	1	O-Ring
22:2	237-21	1	O-Ring
23	323-9	2	Screw-HH
24	3296-59	2	Nut-Lock, NI
25	145-2552	1	Hydraulic Tube ASM
25:1	237-21	1	O-Ring
25:2	237-22	1	O-Ring
26	145-2553	1	Hydraulic Tube ASM
26:1	237-21	1	O-Ring
26:2	237-22	1	O-Ring
27	32144-57	2	Screw-Thd Roll
28	56-7973	6	Clamp-Tube
29	3230-5	1	Bolt-CARR
30	119-1418	4	Plate-Clamp, Short

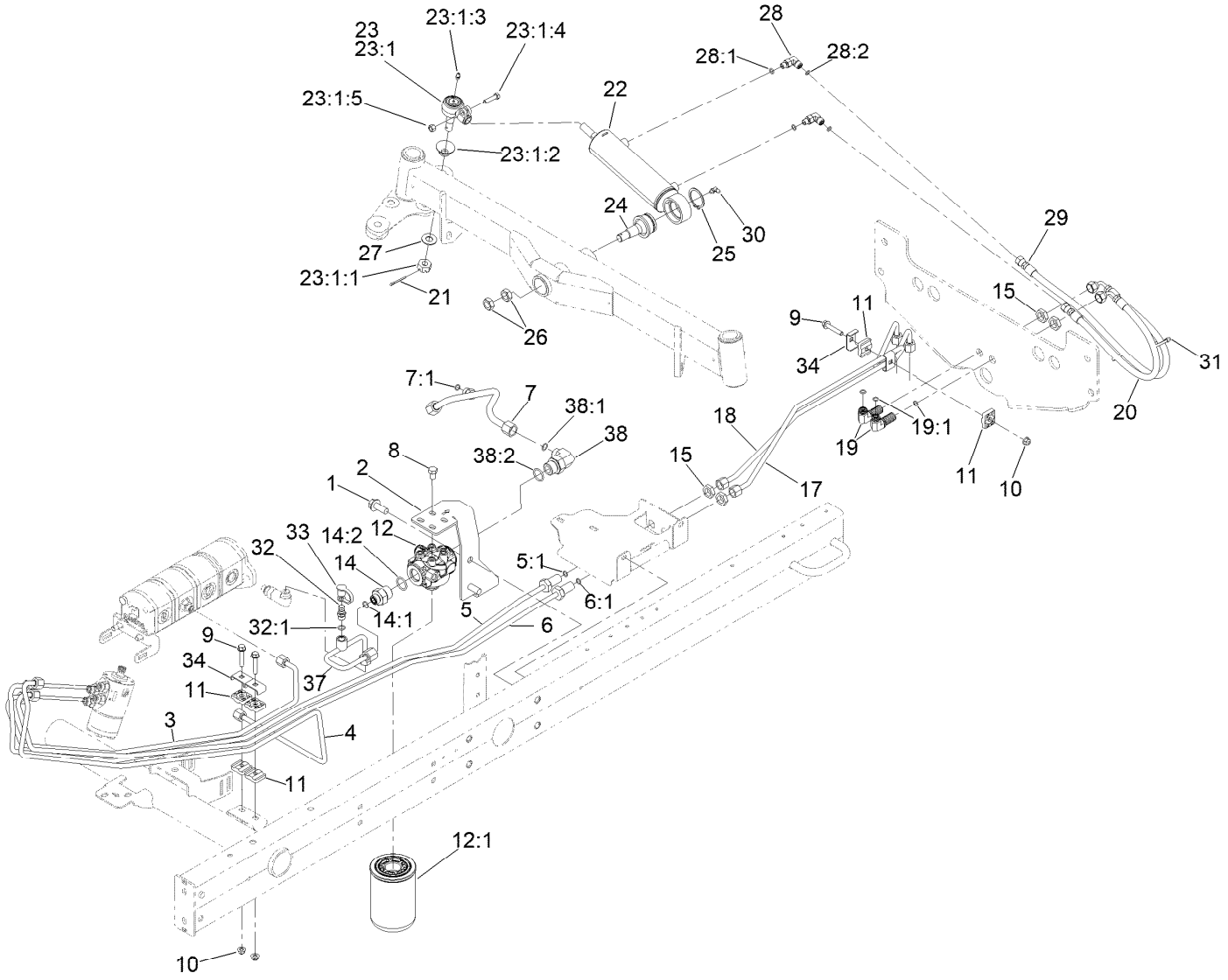

Steering Hydraulic Assembly

Ref.	Part Number	Qty.	Description
1	3234-38	2	Screw-HHF
2	145-2477-0P	1	Bracket-Mount, Filter
3	144-2096	1	Tube ASM-Hydraulic
4	144-2054	1	Tube ASM-Hydraulic
5	144-2097	1	Tube ASM-Hydraulic
5:1	237-22	1	O-Ring
6	144-2098	1	Tube ASM-Hydraulic
6:1	237-22	1	O-Ring
7	145-2562	1	Hydraulic Tube ASM
7:1	237-22	1	O-Ring
8	33115-016	4	Screw-HH
9	94-5780	3	Screw-HWH
10	119-4041	3	Nut-HF
11	56-7973	6	Clamp-Tube
12	93-2242	1	Oil Filter ASM
12:1	75-1310	1	Filter-HYD
14	100-4240	1	Fitting-STR
14:1	237-30	1	O-Ring

Ref.	Part Number	Qty.	Description
14:2	237-81	1	O-Ring
15	340-70	4	Nut-Lock
17	110-9019	1	Tube-HYD
18	110-9020	1	Tube-HYD
19	340-154	2	Union-Bulkhead
19:1	237-22	2	O-Ring
20	110-0928	1	Hose-HYD
21	3272-12	1	Pin-Cotter
22	110-9035	1	HYD Cylinder ASM
23	106-6895-03	1	Ball Joint ASM
23:1		1	Joint-Ball ●
23:1:1	32136-13	1	Nut-SHH
23:1:2	106-6896	1	Seal
23:1:3	302-5	1	Fitting-Grease
23:1:4	3210-7	1	Screw-HH
23:1:5	32152-5	1	Nut-Hex
24	106-6774	1	Joint-Ball
25	32151-104	1	Ring-Retaining, External

● Not serviced separately

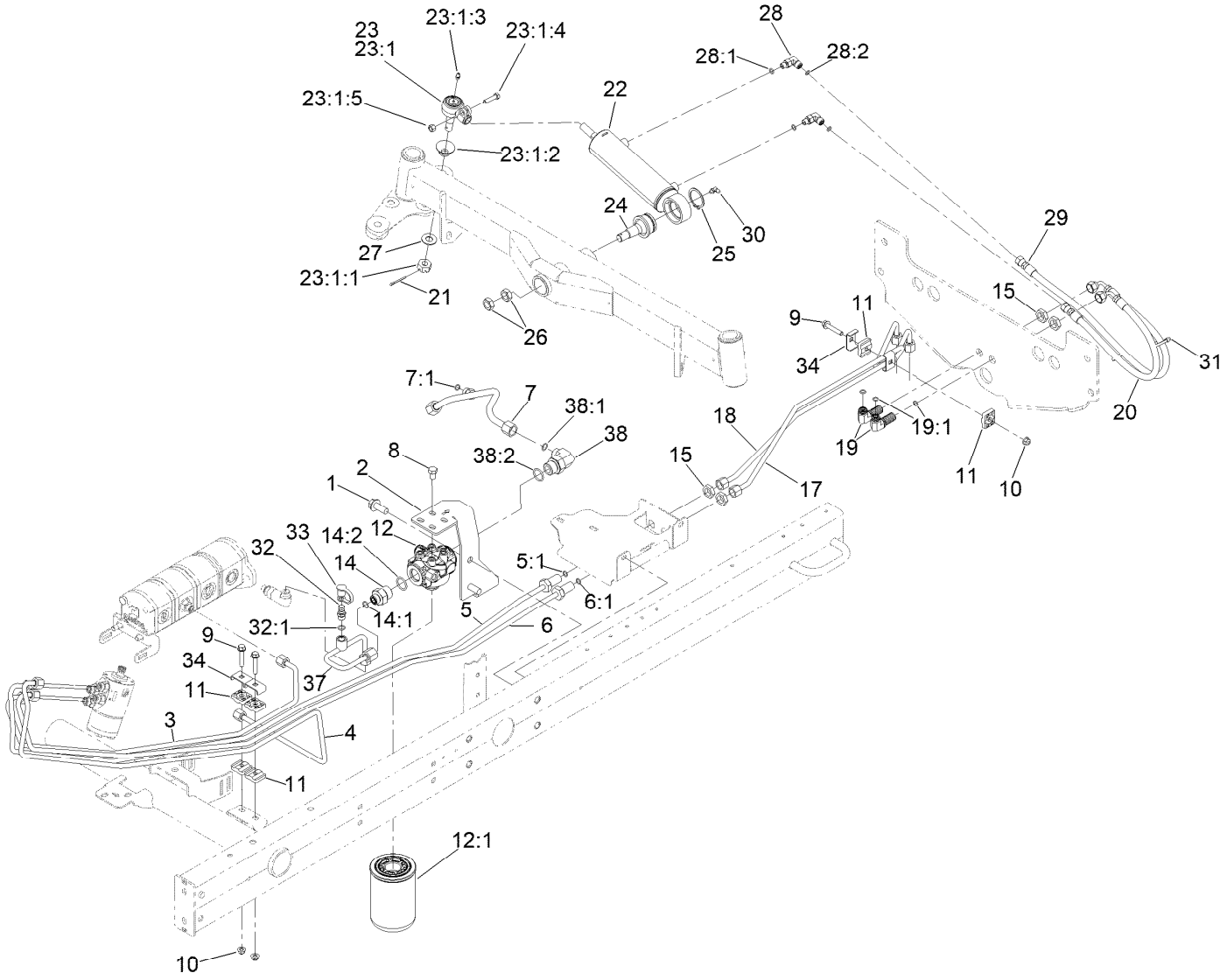

Steering Hydraulic Assembly (continued)

Ref.	Part Number	Qty.	Description
26	3220-6	2	Nut-Jam
27	69-8980	1	Washer
28	340-132	2	Fitting-Elbow, 90 DEG
28:1	237-78	1	O-Ring
28:2	237-21	1	O-Ring
29	110-0973	1	Hose-HYD
30	302-40	1	Fitting-Grease, 90 DEG
31	3290-378	2	Tie-Cable

Ref.	Part Number	Qty.	Description
32	59-7410	1	Fitting-Diagnostic
32:1	237-42	1	O-Ring
33	353-947	1	Cap-Dust, Black
34	119-1418	4	Plate-Clamp, Short
37	145-2478	1	Tube ASM-Hydraulic
38	340-131	1	Fitting-HYD, 90 DEG
38:1	237-30	1	O-Ring
38:2	237-81	1	O-Ring

● Not serviced separately

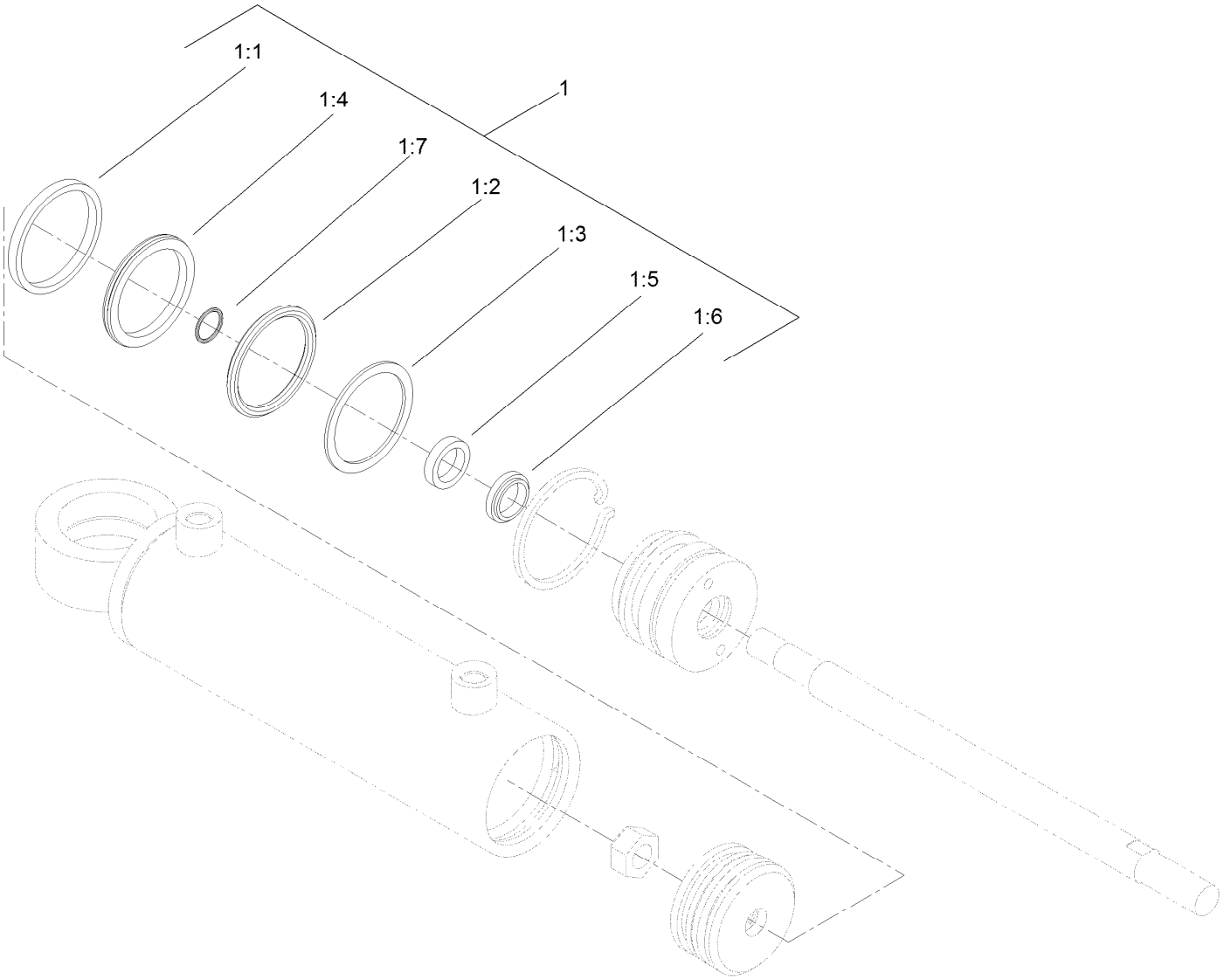

Hydraulic Cylinder Assembly No. 110-9035

Ref.	*Part Number*	*Qty.*	*Description*
1	114-8875	1	Seal Kit
1:1		1	O-Ring ●
1:2		1	Backup ●
1:3		1	Bp Seal ●
1:4		1	Wear Ring ●
1:5		1	Bt Seal ●
1:6		1	Dust Seal ●
1:7		1	O-Ring ●

● Not serviced separately

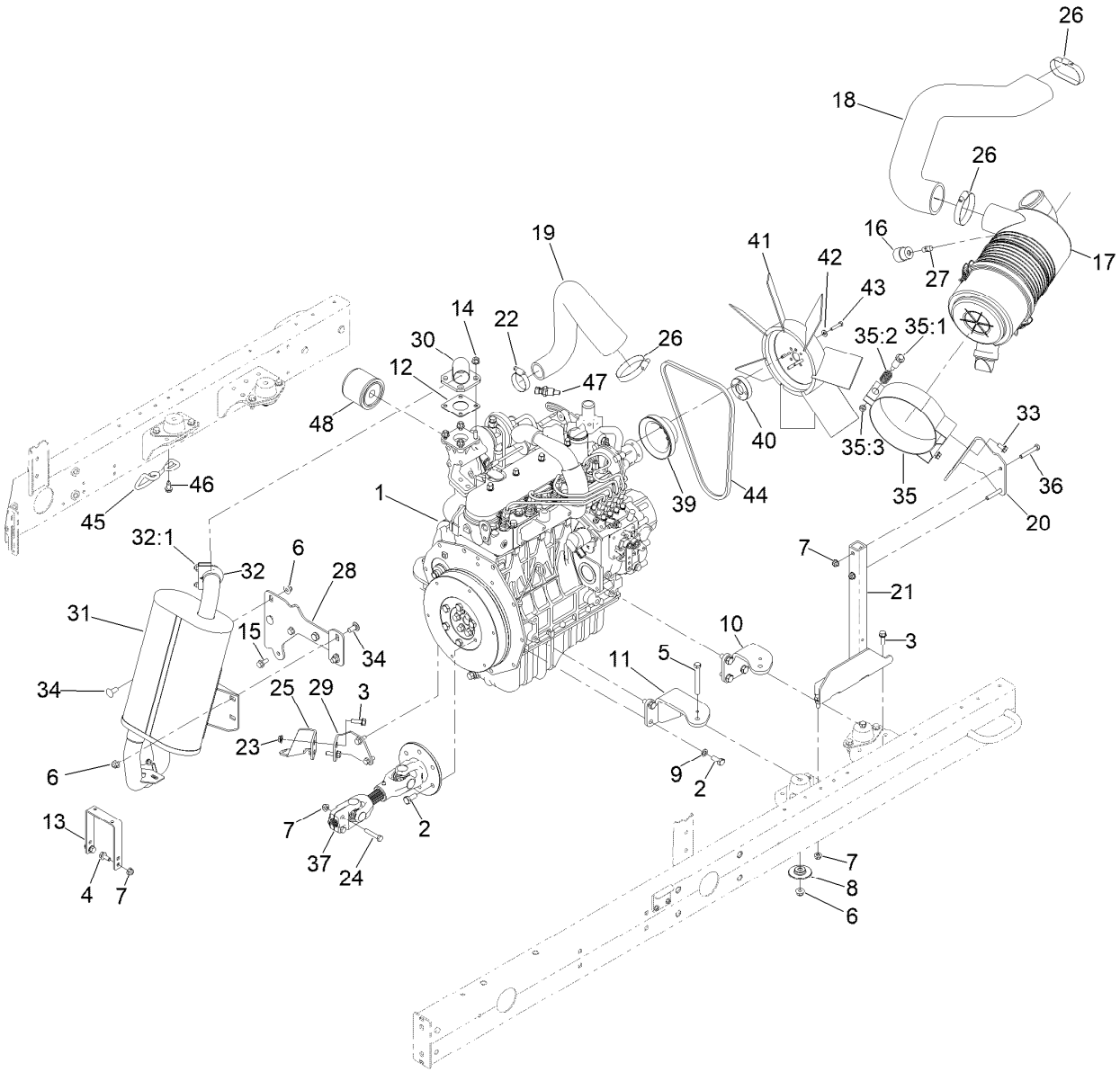

Engine, Air Cleaner and Drive Shaft Assembly

Ref.	Part Number	Qty.	Description
1	132-5209	1	Engine-Kubota, V1505T
2	43-0090	19	Screw-HH
3	3234-29	5	Screw-HHF
4	3234-5	2	Screw-HHF
5	323-14	4	Screw-HH
6	119-4042	10	Nut-HF, NI
7	119-4041	9	Nut-HF
8	138-6462	4	Support-Isolator
9	48-9590	13	Washer-Lock
10	115-8066-0P	2	Mount-Engine
11	120-3812-0P	2	Mount ASM [primed]
12	99-8343	1	Gasket-Muffler
13	108-1799-0P	1	Hoop - Guard
14	104-2612	4	Nut-HF
15	33104-020	4	Screw-HHF
16	93-9164	1	Indicator-Mini
17	110-8917	1	Air Cleaner ASM
18	110-8944	1	Hose-Formed
19	117-8061	1	Hose-Turbo
20	110-8981-0P	1	Bracket-Mnt AC Turbo

Ref.	Part Number	Qty.	Description
21	121-5611-0P	1	Stand W.A. -Air Cleaner [primed
22	2412-3	1	Clamp-Hose
23	32128-20	2	Nut-HF
24	323-9	2	Screw-HH
25	117-0286	1	Bracket-Tailpipe
26	2412-125	3	Clamp-Hose
27	94-1416	1	Adapter-Indicator
28	108-1785-0P	1	Bracket -Support, Muffler
29	117-0288	1	Bracket-Tailpipe
30	108-1783	1	Header ASM
31	108-7643	1	Muffler
32	2112-9	2	Clamp
32:1	32128-20	2	Nut-HF
33	3234-14	2	Screw-HHF
34	3231-27	4	Screw-CARR
35	93-7486	1	Clamp ASM
35:1	94-3653	1	Bolt
35:2	94-3654	1	Spring
35:3	33024-00	1	Nut-Lock, NI
36	322-10	2	Screw-HH

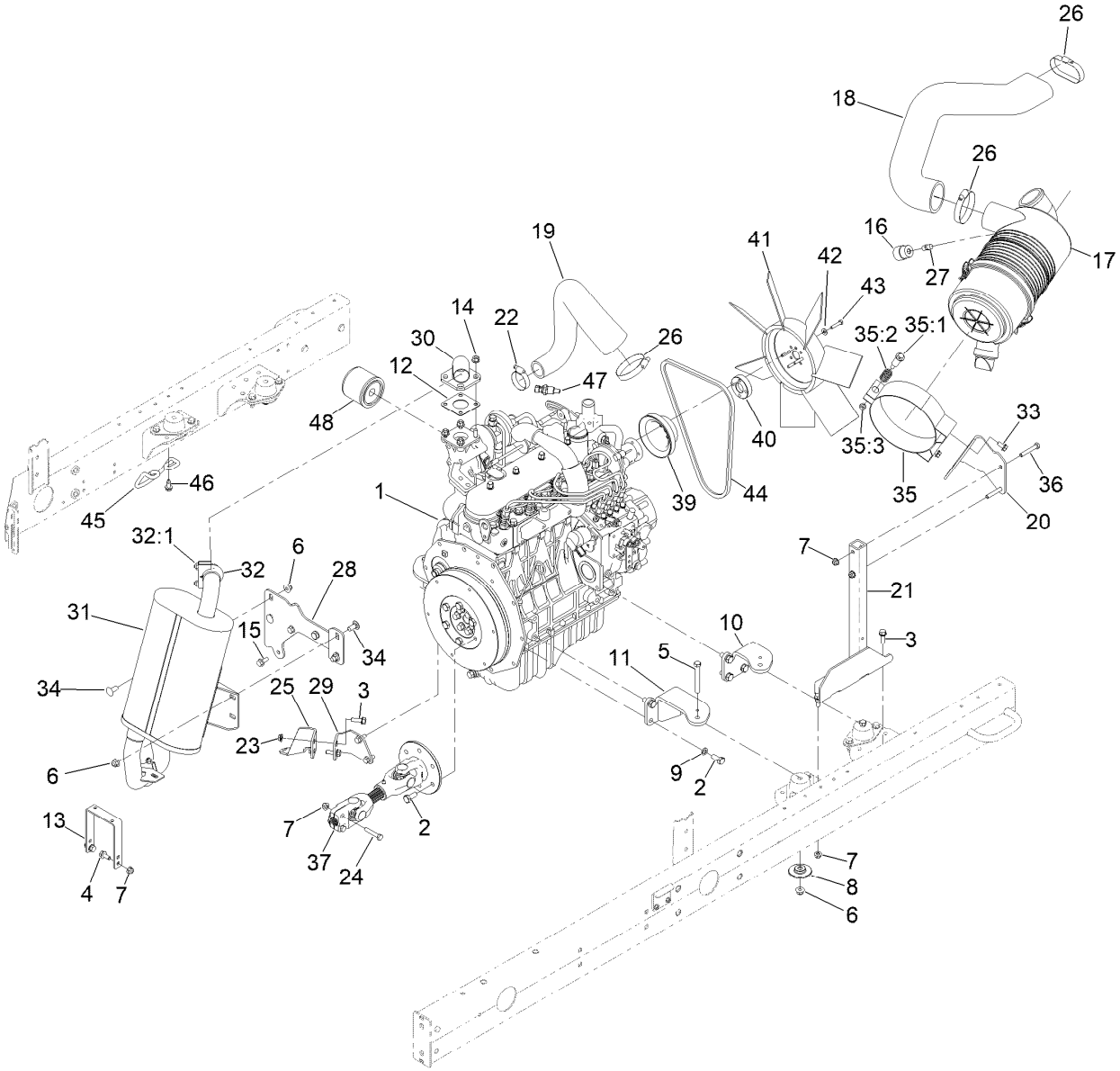

Engine, Air Cleaner and Drive Shaft Assembly (continued)

Ref.	Part Number	Qty.	Description
37	144-2053	1	Driveshaft ASM
39	110-0972	1	Pulley
40	105-0000	1	Spacer-Fan
41	110-8852	1	Fan-Cooling
42	3256-22	4	Washer-Flat
43	33113-030	4	Screw-HH

Ref.	Part Number	Qty.	Description
44	98-9676	1	V-Belt
45	127-2612	1	Guard-Pipe, Tail
46	32104-32	2	Screw-HWH
47	119-4478	1	Sender-Temperature
48	108-3841	1	Filter-Oil

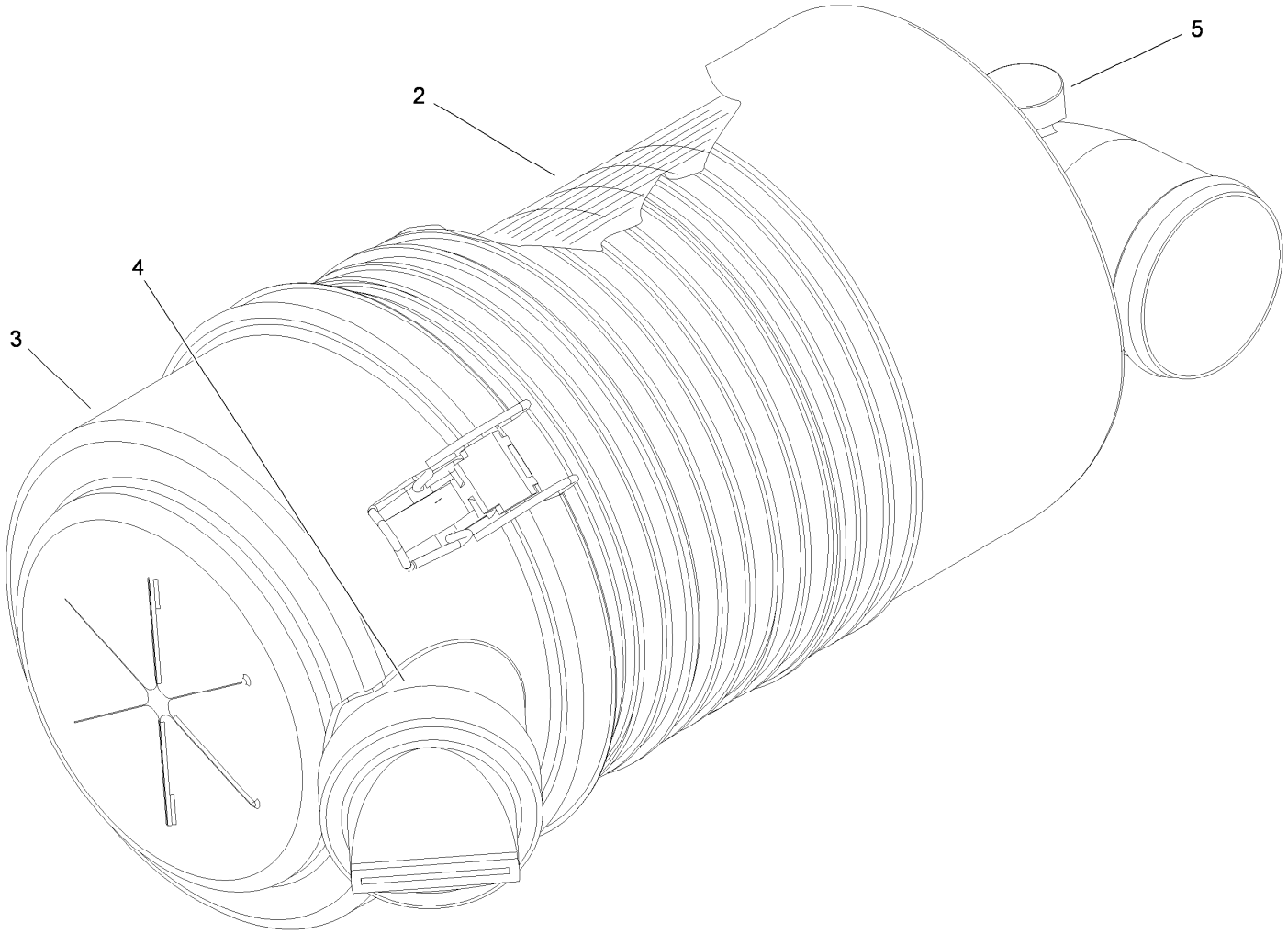

Air Cleaner Assembly No. 110-8917

Ref.	*Part Number*	*Qty.*	*Description*
2	108-3812	1	Filter-Air
3	93-5986	1	Cover ASM
4	87-9400	1	Valve-Vacuator
5	285-17	1	Plug-Pipe ●

● Not illustrated

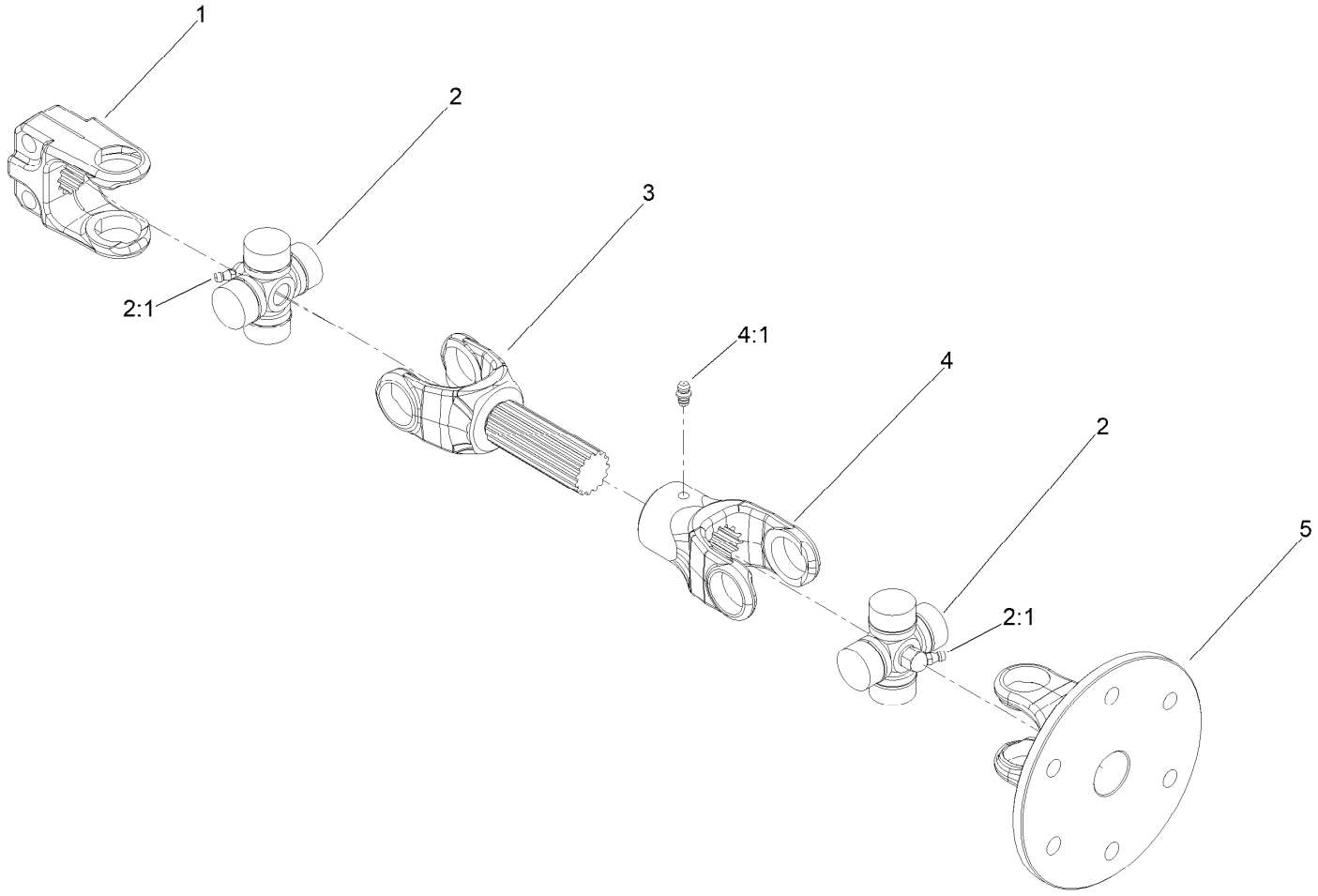

Drivershaft Assembly No. 144-2053

Ref.	*Part Number*	*Qty.*	*Description*
1	145-2543	1	Yoke And Shaft ASM
2	54-9180	2	U-Joint Kit
2:1	62-3820	1	Fitting-Grease
3	127-2553	1	Yoke-Shaft
4	127-2554	1	Yoke-Telescoping
4:1	302-22	1	Fitting-Grease
5	145-2535	1	Yoke-Driveshaft, 13T

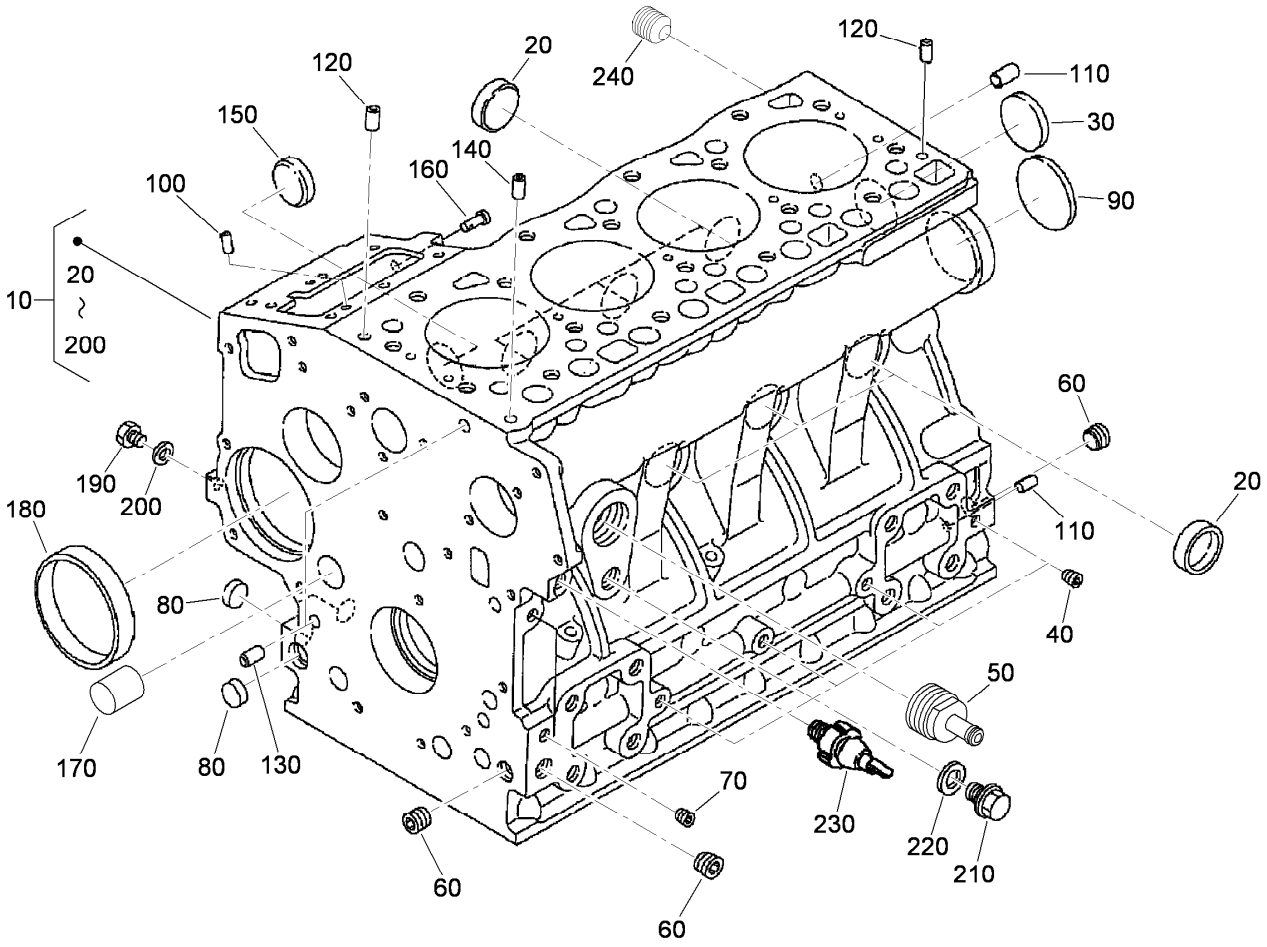

Crankcase Assembly

Ref.	*Part Number*	*Qty.*	*Description*
10	115-4115	1	Crankcase ASM
20	98-9398	6	Cap-Sealing
30	98-7539	1	Cap-Sealing
40	98-7540	4	Plug
50	99-8347	1	Joint-Pipe, Drain
60	98-9597	3	Plug
70	98-7487	2	Plug
80	98-9379	3	Plug-Expansion
90	98-9668	1	Plug-Expansion
100	98-9375	1	Pin-Straight
110	98-9377	1	Pin-Straight
120	98-9376	2	Pin-Straight
130	98-9387	2	Pin-Pipe
140	98-9539	1	Pin-Pipe
150	98-9599	1	Plug
160	105-3796	1	Pin-Spring, Start
170	98-9675	1	Plug
180	98-9656	1	Bushing-Governor, Gear
190	98-7507	1	Plug
200	98-7428	1	Gasket
210	99-3447	1	Plug
220	106-7056	1	Gasket
230	98-9416	1	Switch-Oil
240	98-9444	1	Plug

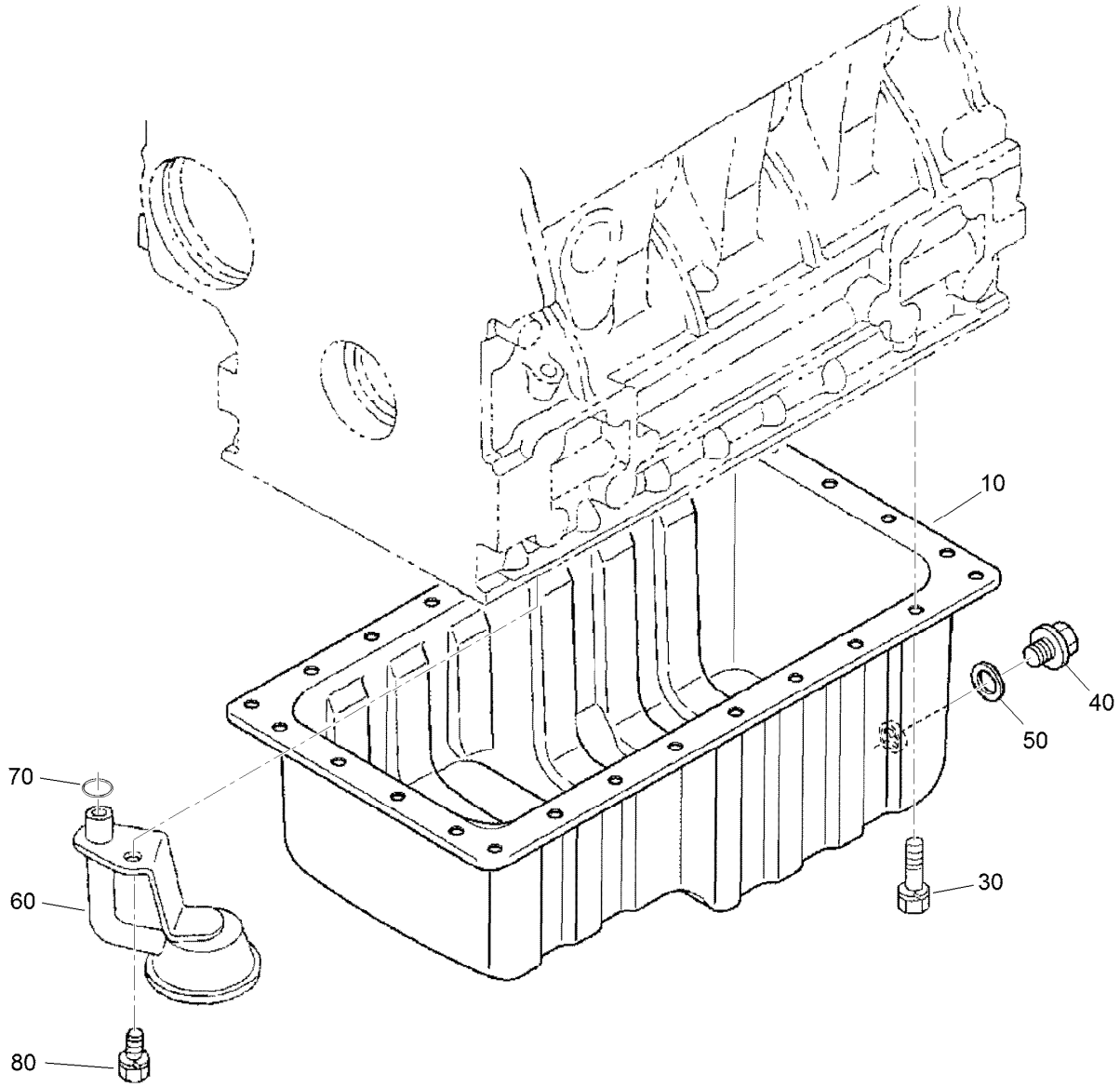

Oil Pan Assembly

Ref.	*Part Number*	*Qty.*	*Description*
10	112-0186	1	Oil Pan ASM
30	98-9351	26	Bolt
40	114-8151	1	Plug-Drain
50	98-7524	1	Gasket
60	112-7003	1	Head-Filter, Oil
70	105-3776	1	O-Ring
80	98-7526	1	Bolt

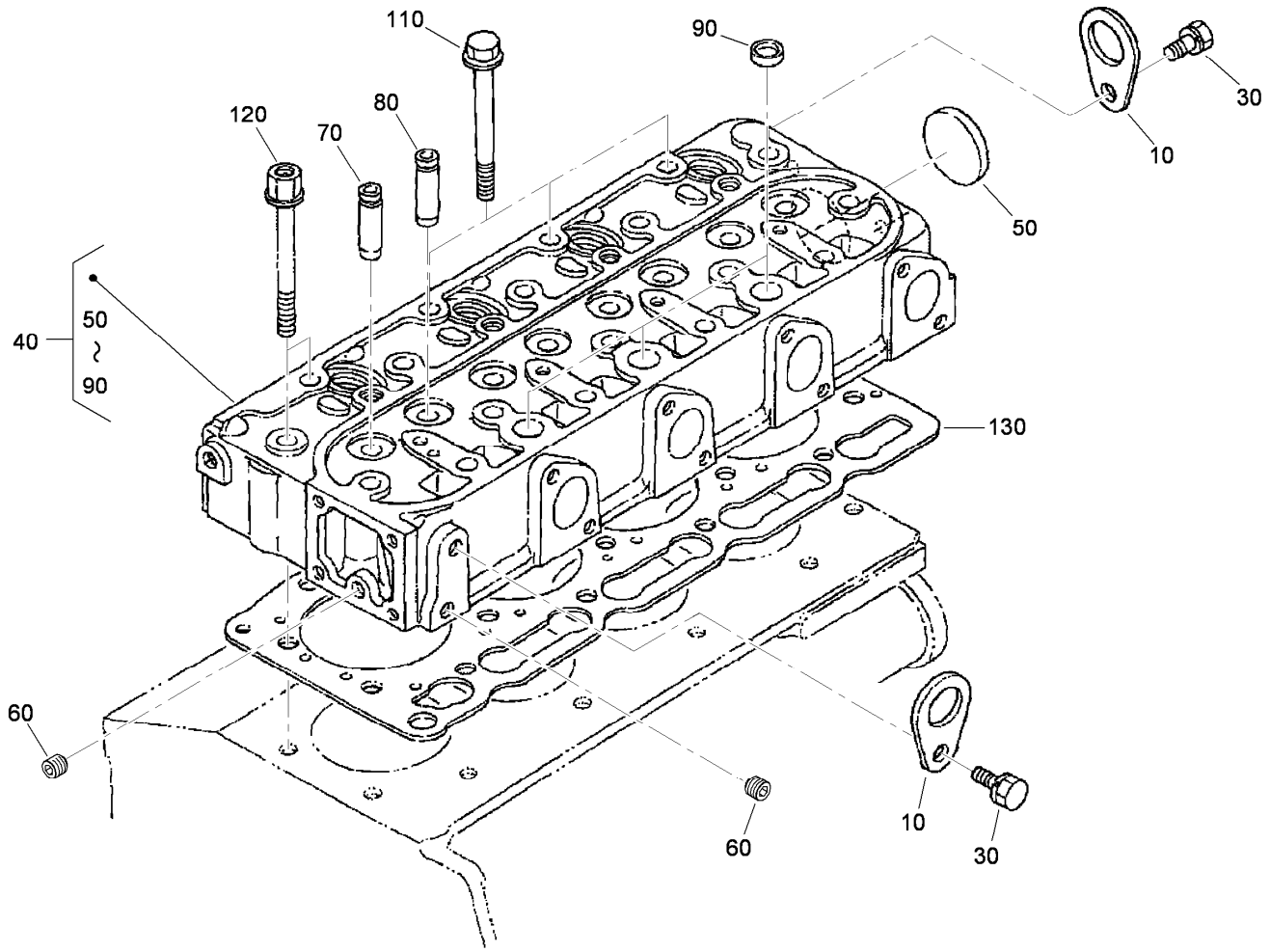

Cylinder Head Assembly

Ref.	*Part Number*	*Qty.*	*Description*
10	98-7531	2	Hook-Engine
30	100-9195	2	Bolt
40	108-2854	1	Cylinder Head ASM
50	105-3705	1	Cap-Sealing
60	98-7540	2	Plug
70	107-9066	4	Guide-Valve, Inlet
80	107-9067	4	Guide-Valve, Exhaust
90	98-9389	3	Cap-Sealing
110	98-9479	16	Bolt-Head, Cylinder
120	98-9647	2	Bolt-Head, Cylinder
130	108-2855	1	Gasket-Head, Cylinder

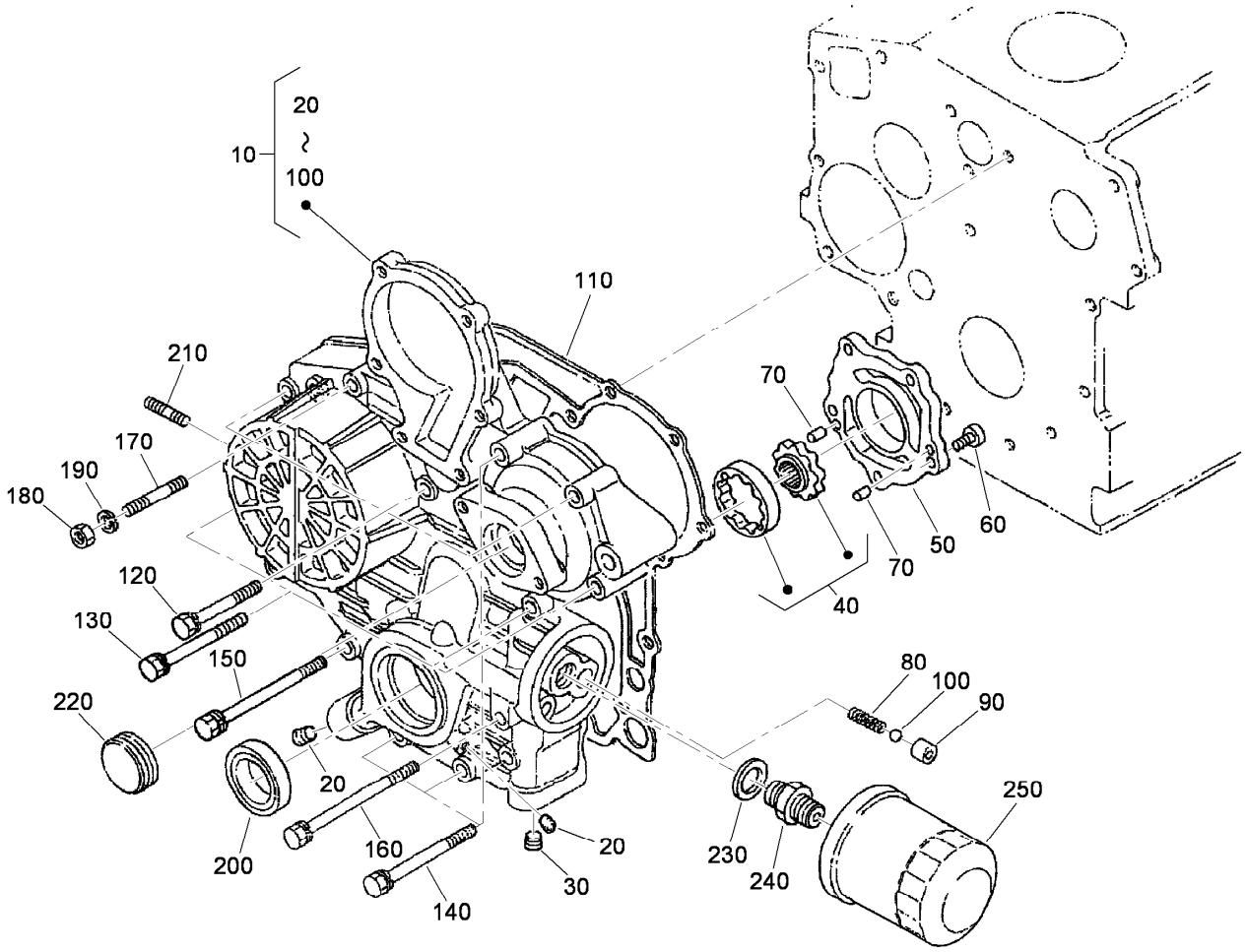

Gear Case Assembly

Ref.	Part Number	Qty.	Description
10	115-4111	1	Gear Case ASM
20	98-9598	5	Plug
30	98-7487	1	Plug
40	98-9540	1	Oil Pump Rotor ASM
50	107-9069	1	Cover-Pump, Oil
60	107-9071	1	Screw
70	107-9072	1	Pin-Straight
80	98-9544	1	Spring
90	98-9543	1	Seat-Valve
100	98-9380	1	Ball
110	98-9633	1	Gasket-Case, Gear
120	98-7496	3	Bolt
130	105-3797	4	Bolt

Ref.	Part Number	Qty.	Description
140	98-9356	2	Bolt
150	107-9074	1	Bolt
160	98-9586	1	Bolt
170	105-3709	1	Stud
180	98-7572	1	Nut
190	98-7699	1	Washer-Spring
200	98-9482	1	Seal-Oil
210	105-3710	2	Stud
220	98-9641	1	Cover-Case, Gear
230	98-9727	1	Collar
240	104-5159	1	Holder ASM
250	108-3841	1	Filter-Oil

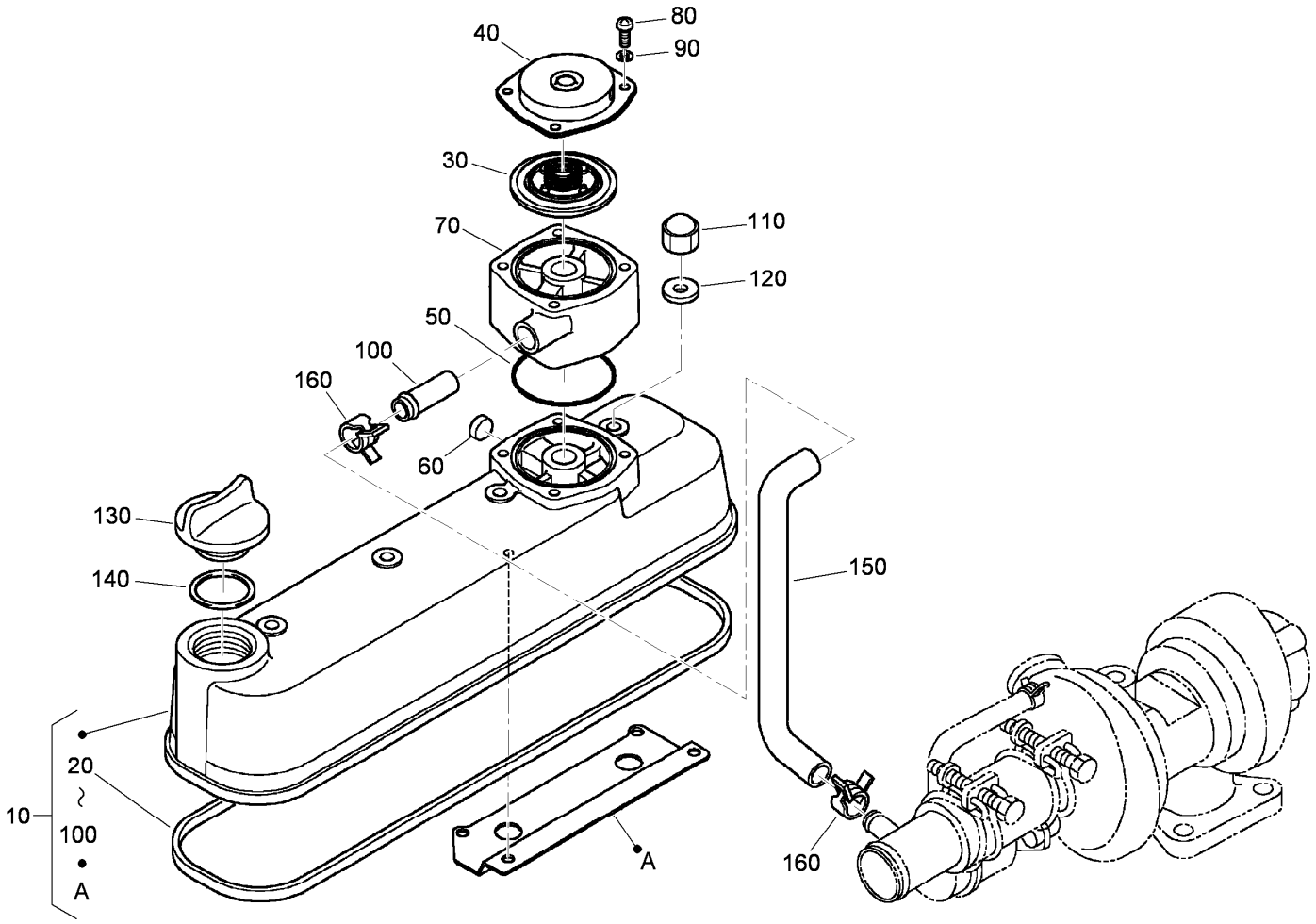

Cylinder Head Cover Assembly

Ref.	*Part Number*	*Qty.*	*Description*
10	115-3041	1	Cylinder Head Cover ASM
20	105-3712	1	Gasket-Cover, Head
30	110-3715	1	Valve-Breather
40	110-3714	1	Cover-Breather
50	110-3846	1	O Ring-Breather
60	115-3042	1	Cap-Sealing
70	115-3043	1	Spacer-Breather
80	115-3044	4	Screw-Pan Head
90	100-2204	4	Washer-Spring
100	98-7766	1	Pipe-Return, Water
110	98-9455	4	Nut-Cap
120	98-9454	4	Gasket
130	107-9075	1	Plug-Filler, Oil
140	99-3446	1	O-Ring
150	115-4119	1	Tube-Breather, Turbo
160	108-2859	2	Clamp-Hose

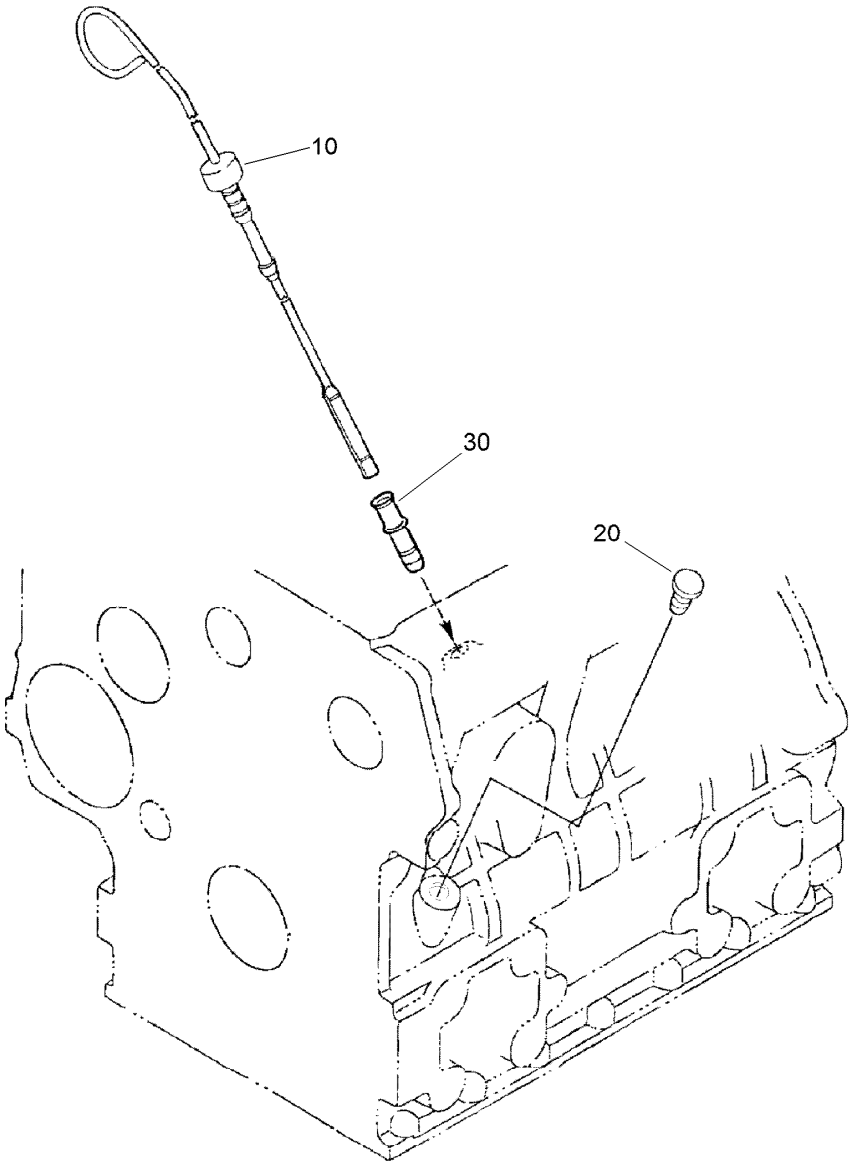

Dipstick and Guide Assembly

Ref.	*Part Number*	*Qty.*	*Description*
10	105-3714	1	Gauge-Oil
20	110-3720	1	Plug-Gauge, Oil
30	105-4580	1	Guide-Gauge, Oil

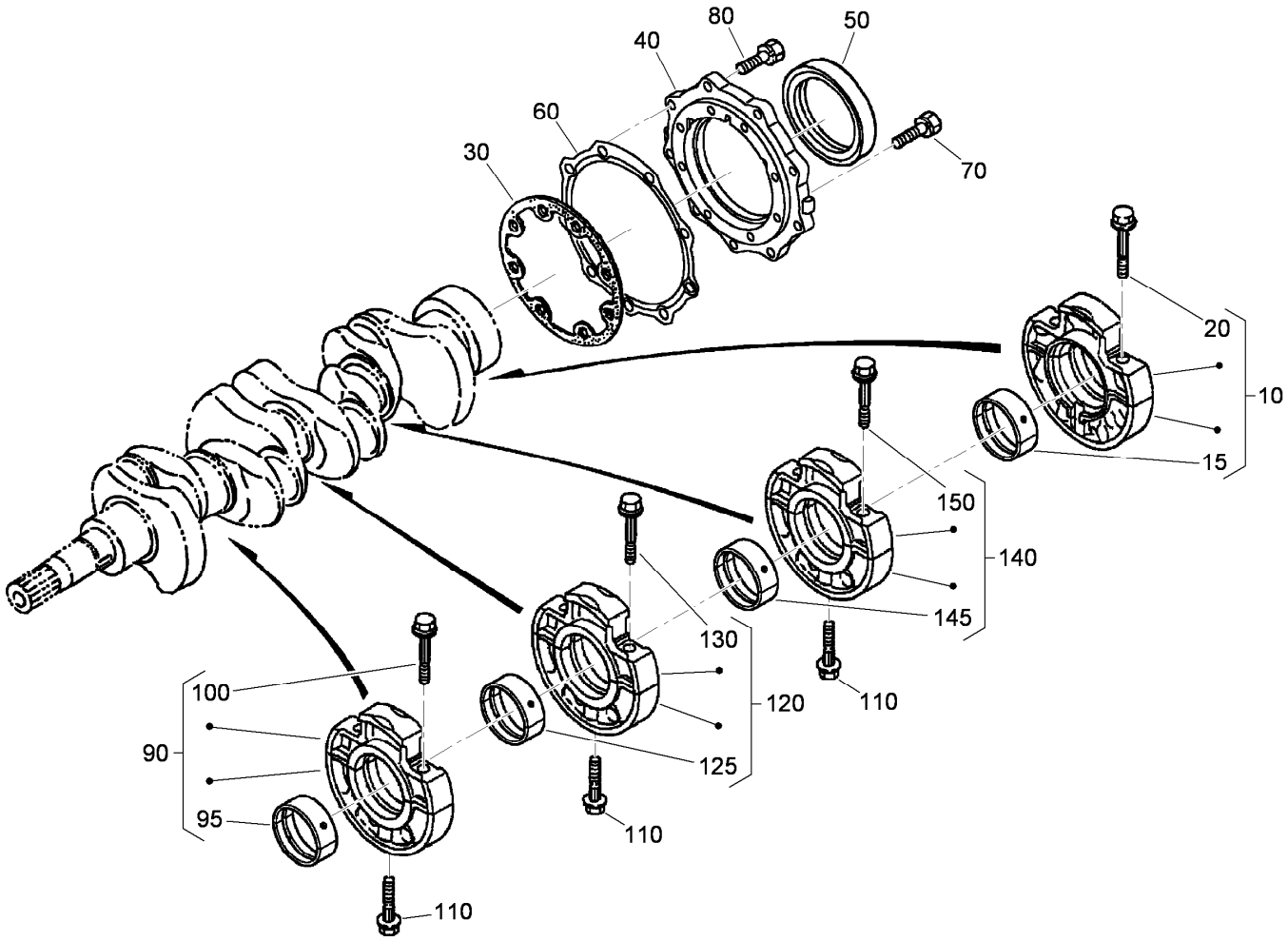

Main Bearing Case Assembly

Ref.	*Part Number*	*Qty.*	*Description*
10	112-7026	1	Wheel Bearing Case ASM
15	112-7045	1	Metal-Crankshaft
20	98-9484	2	Bolt-Case, Bearing
30	98-9634	1	Gasket-Case, Bearing
40	112-7046	1	Cover-Case, Bearing
50	112-0180	1	Seal-Oil
60	112-7037	1	Gasket-Cover, Case
70	98-9352	8	Bolt
80	98-7568	9	Bolt
90	112-7028	1	Bearing ASM
95	112-7011	1	Bearing-Main (STD)
100	98-9484	2	Bolt-Case, Bearing
110	98-9485	3	Bolt-Case, Bearing
120	112-7027	1	Bearing ASM
125	112-7011	1	Bearing-Main (STD)
130	98-9484	2	Bolt-Case, Bearing
140	115-4120	1	Bearing Case ASM
145	112-7011	1	Bearing-Main (STD)
150	98-9484	2	Bolt-Case, Bearing

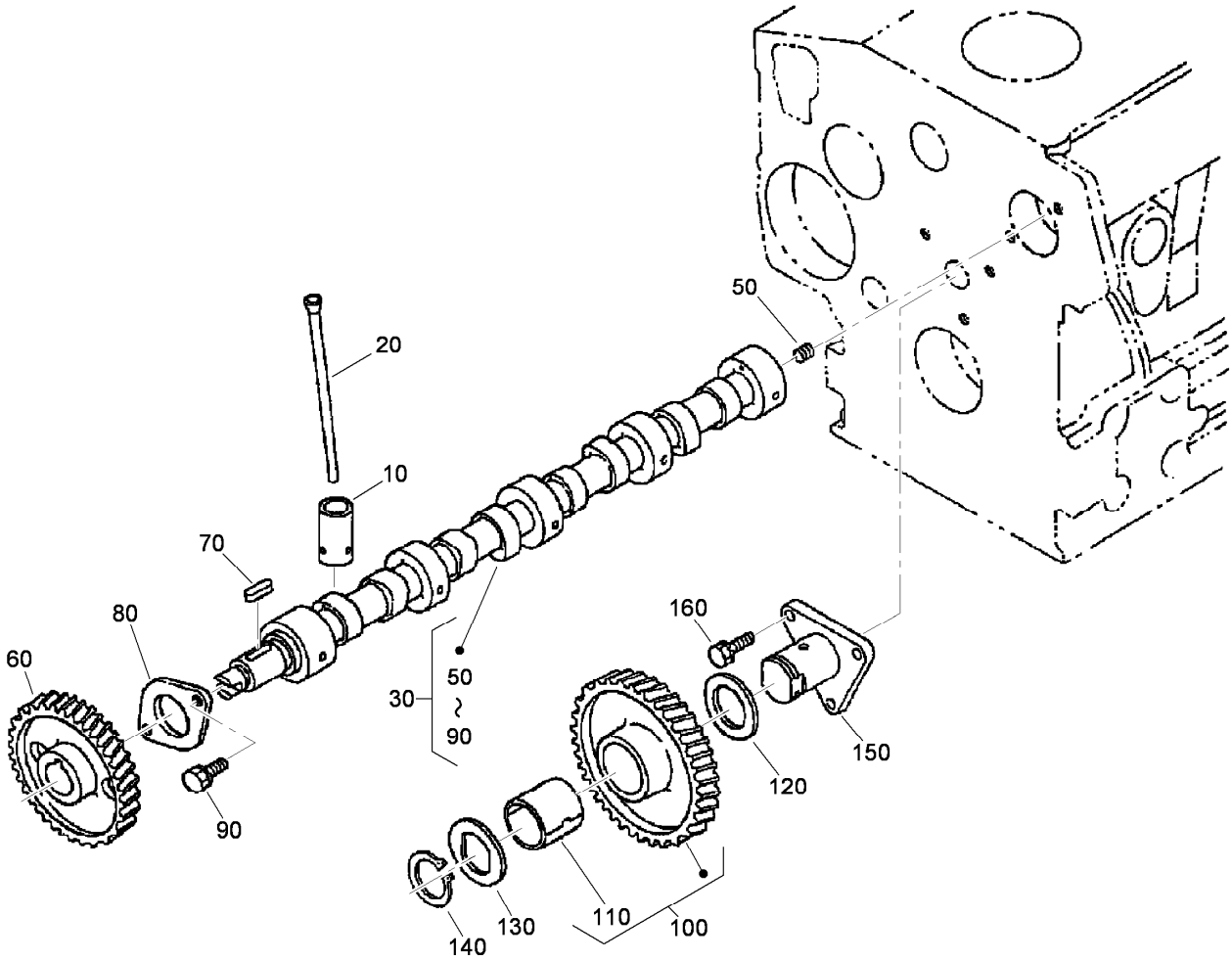

Cam Shaft and Idle Gear Shaft Assembly

Ref.	*Part Number*	*Qty.*	*Description*
10	112-0185	8	Tappet
20	98-9509	8	Rod-Push
30	112-8402	1	Camshaft ASM
50	98-7449	1	Screw-Set
60	120-3116	1	Camshaft ASM
70	98-9378	1	Key-Feather
80	98-9510	1	Stopper-Camshaft
90	98-7692	2	Bolt
100	98-9649	1	Idle Gear ASM
110	98-9650	1	Bushing-Gear, Idle
120	98-9535	1	Collar-Gear, Idle
130	98-9536	1	Collar-Gear, Idle
140	98-9534	1	Circlip-Gear, Idle
150	98-9533	1	Shaft-Gear, Idle
160	98-7692	3	Bolt

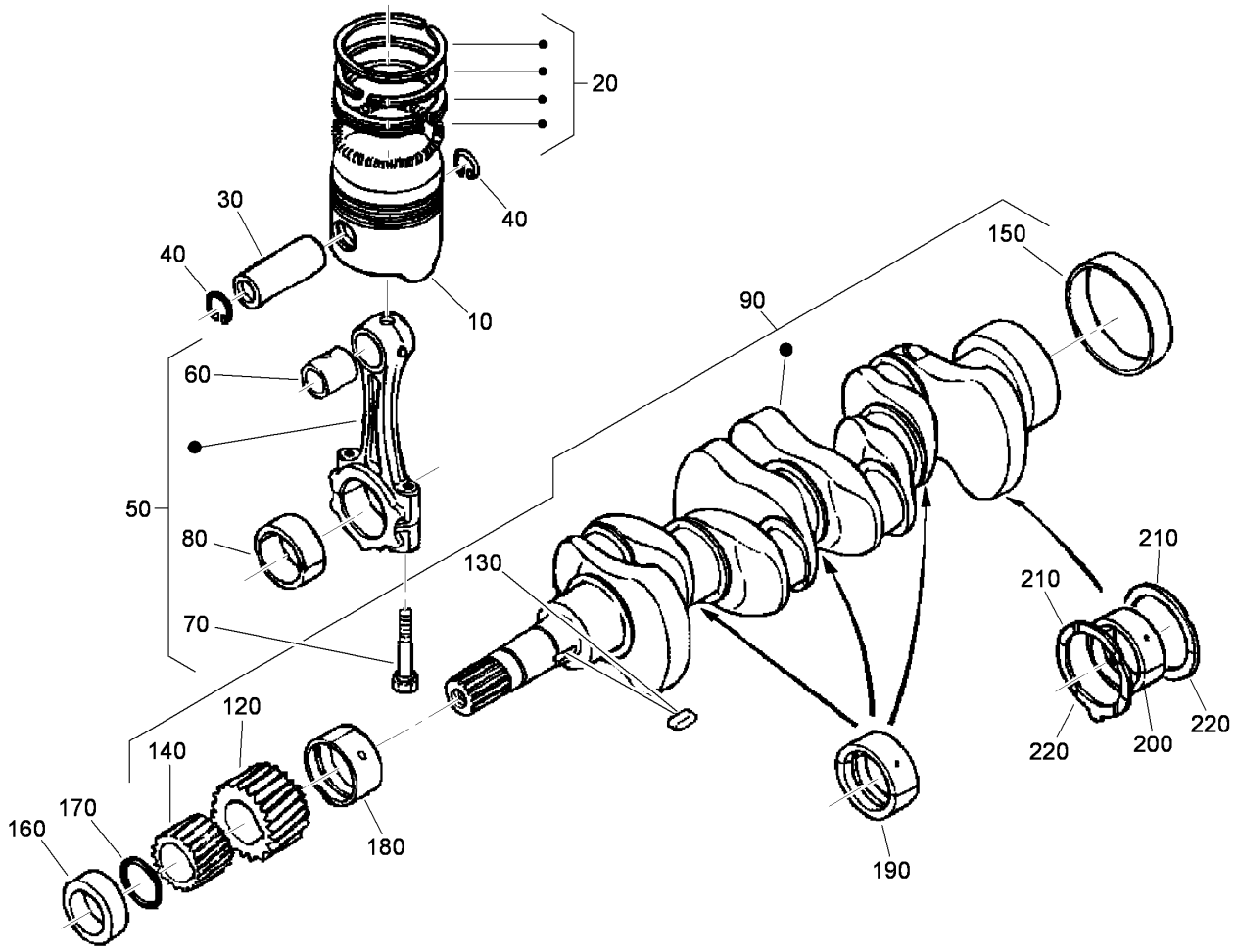

Piston and Crankshaft Assembly

Ref.	Part Number	Qty.	Description
10	98-9550	4	Piston (STD)
10	108-1417	4	Piston (+0.5MM)
20	98-9551	4	Piston Ring ASM (STD)
20	108-1404	4	Piston Ring ASM (+0.5MM)
30	98-9513	4	Pin-Piston
40	98-9514	8	Circlip-Pin, Piston
50	98-9552	4	Connecting Rod ASM
60	115-3014	4	Bushing-Pin, Piston
70	98-9517	8	Bolt-Rod, Connecting
80	98-9553	4	Bearing-Rod (STD)
80	108-1405	4	Metal-Crankpin (-0.2MM)
80	108-1406	4	Metal-Crankpin (-0.4MM)
90	105-3718	1	Crankshaft ASM
120	98-9532	1	Gear-Crankshaft
130	98-9666	1	Key
140	98-9542	1	Gear-Drive, Oil Pump
150	98-9522	1	Sleeve-Crankshaft

Ref.	Part Number	Qty.	Description
160	98-9521	1	Collar-Crankshaft
170	105-3783	1	O-Ring
180	112-7005	1	Bearing-Main (STD)
180	112-7009	1	Metal-Crankpin (-0.2MM)
180	112-7010	1	Metal-Crankpin (-0.4MM)
190	112-7011	3	Bearing-Main (STD)
190	127-0433	3	Metal-Crankshaft (-0.2MM)
190	112-7013	3	Metal-Crankpin (-0.4MM)
200	112-7006	1	Bearing-Main (STD)
200	112-7007	1	Metal-Crankshaft (.2MM)
200	112-7040	1	Metal-Crankshaft (-0.4Mm)
210	98-9413	2	Bearing-Thrust (STD)
210	98-9414	2	Bearing-Thrust (0.2MM)
210	98-9415	2	Bearing-Thrust (0.4MM)
220	98-9688	2	Bearing-Thrust (STD)
220	98-9689	2	Bearing-Thrust (0.2MM)
220	127-0438	2	Metal-Side (+0.40MM)

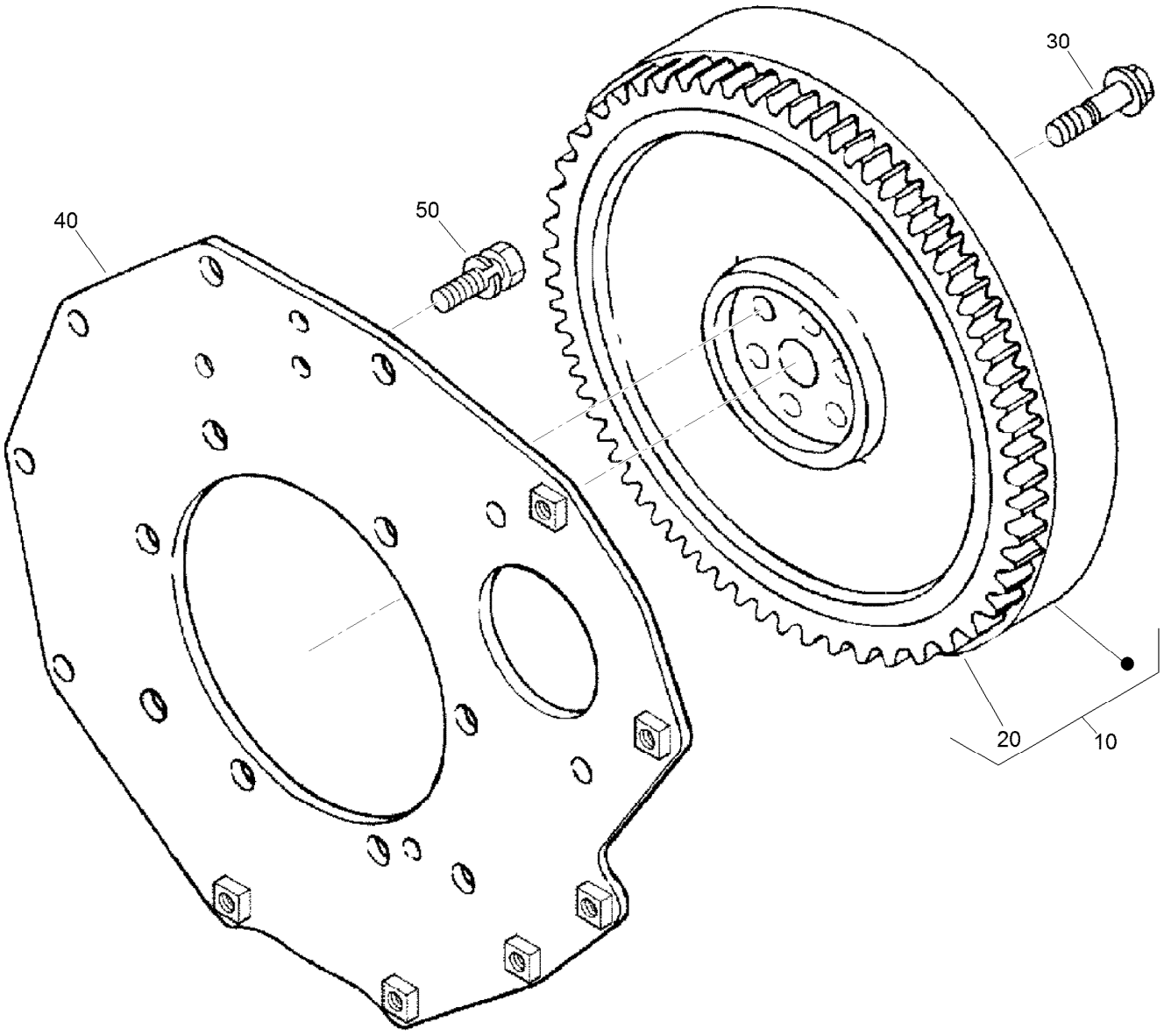

Flywheel Assembly

Ref.	*Part Number*	*Qty.*	*Description*
10	105-3721	1	Flywheel ASM
20	115-3015	1	Gear-Ring
30	98-9537	6	Bolt-Flywheel
40	98-9486	1	Plate-End, Rear
50	98-9392	8	Bolt

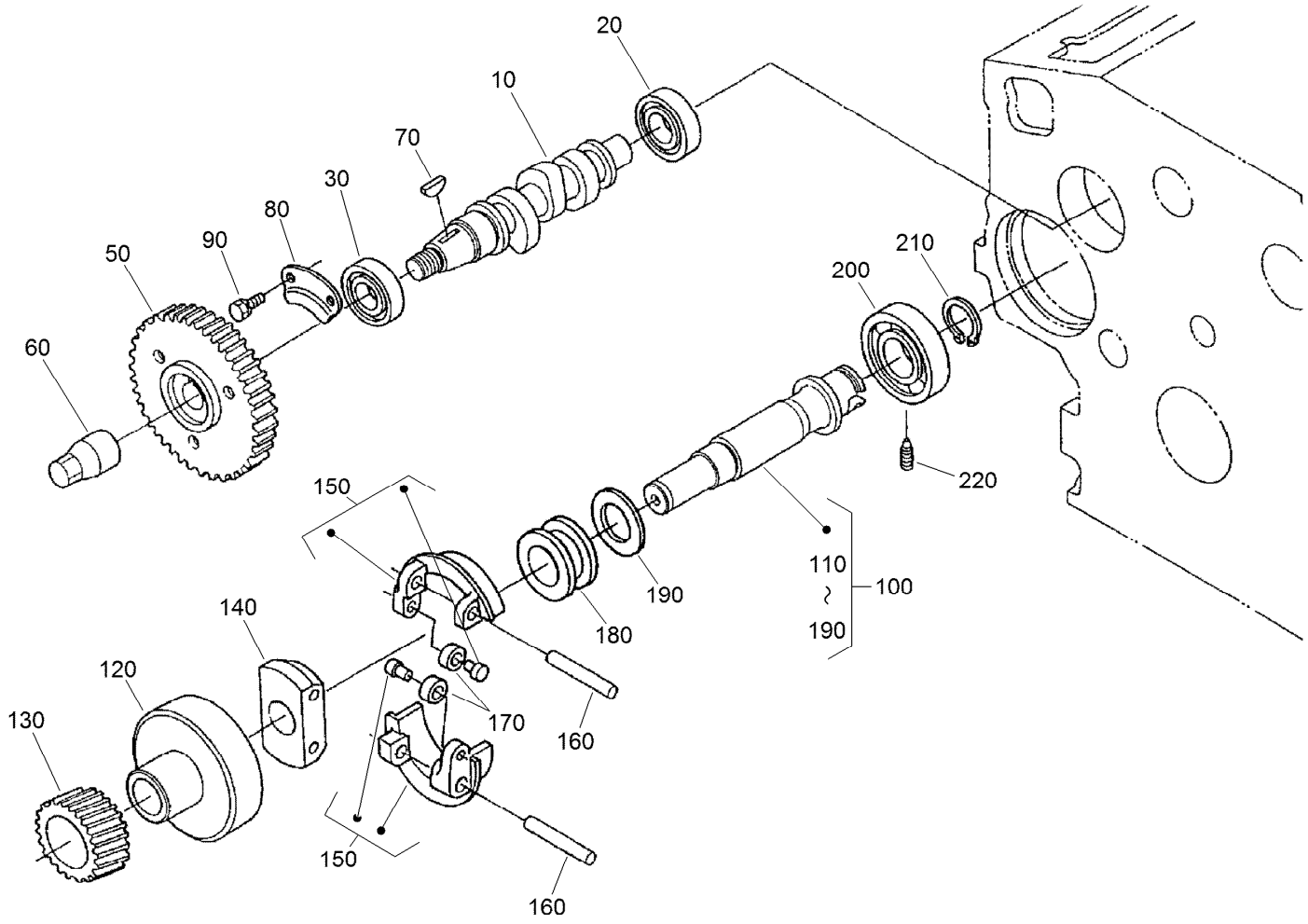

Fuel Camshaft and Governor Shaft Assembly

Ref.	Part Number	Qty.	Description
10	105-3723	1	Camshaft-Fuel
20	107-9077	1	Bearing-Ball
30	107-9078	1	Bearing-Ball
50	98-9669	1	Gear-Pump, Injection
60	98-9590	1	Nut-Cap
70	98-9595	1	Key-Woodruff
80	98-9511	1	Stopper-Fuel, Camshaft
90	98-7692	2	Bolt
100	105-3724	1	Governor Shaft ASM
110	105-3725	1	Shaft-Governor
120	98-9562	1	Holder-Gear, Governor

Ref.	Part Number	Qty.	Description
130	98-9673	1	Gear-Governor
140	98-9561	1	Holder-Weight, Governor
150	98-9559	2	Governor Weight ASM
160	98-9560	2	Shaft-Weight, Governor
170	98-9692	2	Roller
180	98-9563	1	Sleeve-Governor
190	98-9564	1	Washer-Thrust
200	107-9079	1	Bearing-Ball
210	98-9657	1	Circlip-Shaft, Governor
220	98-9565	1	Screw-Set

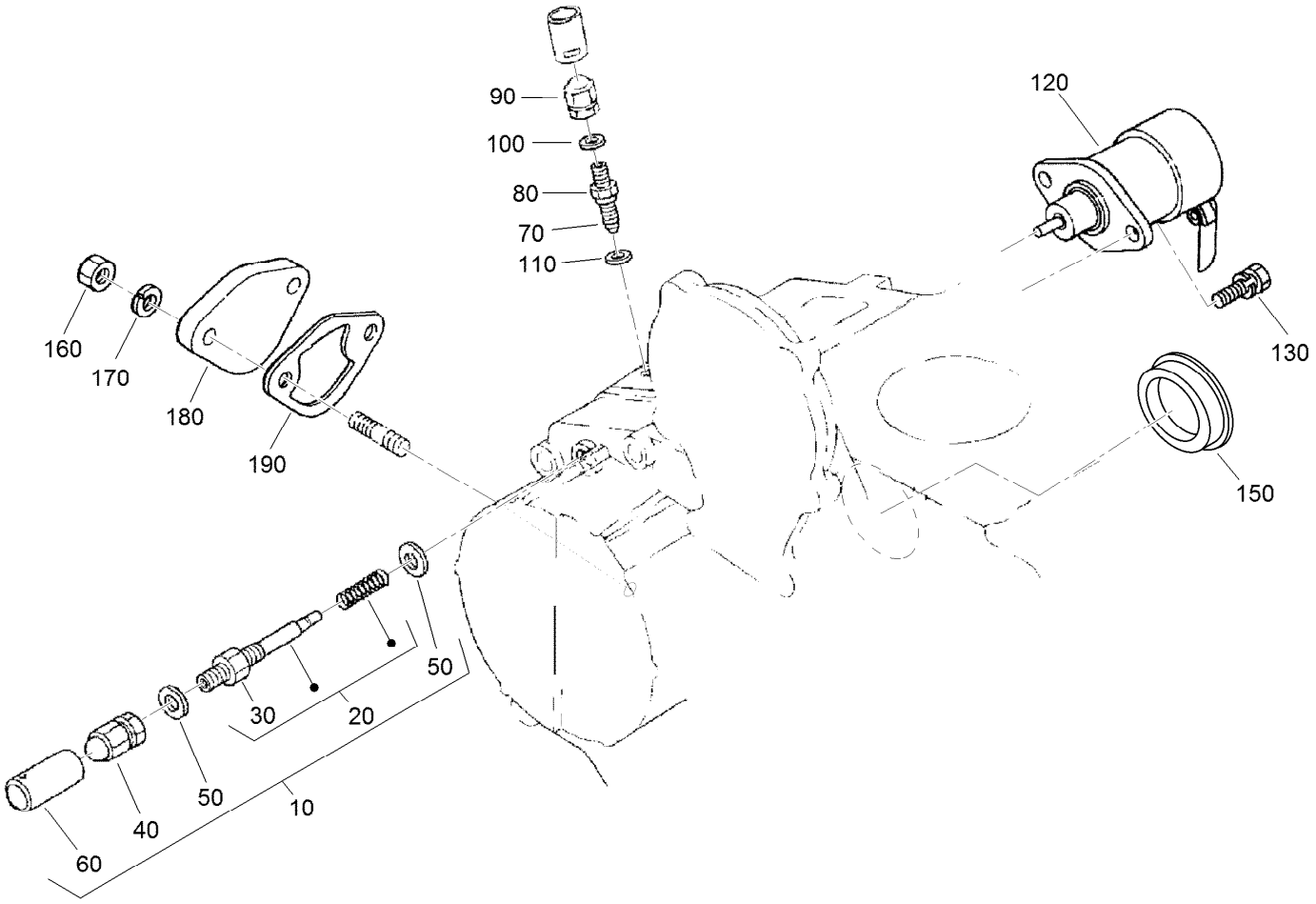

Idle Apparatus Assembly

Ref.	*Part Number*	*Qty.*	*Description*
10	98-9678	1	Idle Apparatus ASM
20	112-7014	1	Adjusting Bolt ASM
30	98-9439	1	Nut
40	112-0181	1	Nut
50	98-7654	2	Gasket
60	98-7656	1	Cap
70	112-7015	1	Bolt-Adjusting
80	100-2175	1	Nut-Lock
90	112-0181	1	Nut
100	98-7654	1	Gasket
110	107-9081	1	Gasket
120	104-5155	1	Solenoid-Stop
130	115-3039	2	Bolt-HSH
150	112-7016	1	Cover-Pump
160	98-7572	2	Nut
170	98-7699	2	Washer-Spring
180	99-3514	1	Cover
190	98-9636	1	Gasket-Pump, Fuel

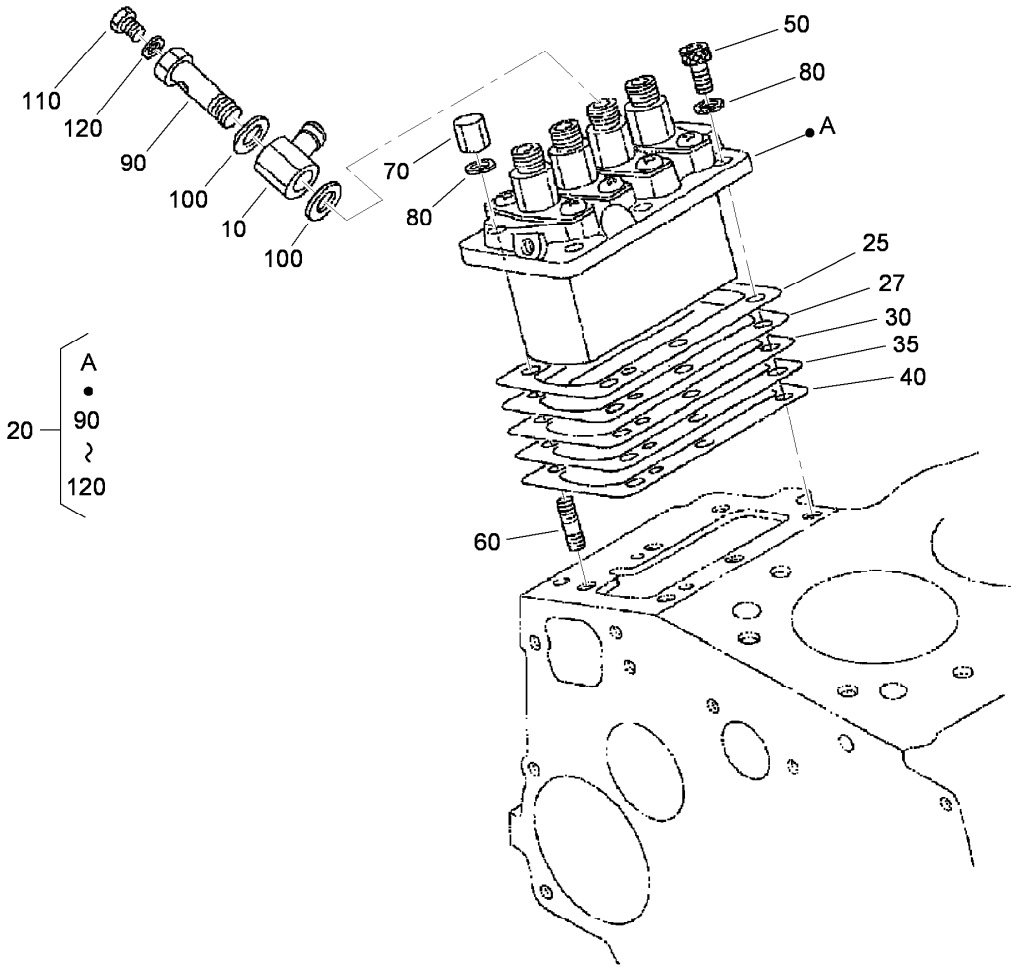

Injection Pump Assembly

Ref.	*Part Number*	*Qty.*	*Description*
10	98-9596	1	Joint-Eye
20	105-3727	1	Injection Pump ASM
25	115-3016	1	Shim-Pump, Injection (.350MM)
27	115-3017	1	Shim-Pump, Injection (.175MM)
30	105-3728	1	Shim-Pump, Injection (.20MM)
35	105-3729	1	Shim-Pump, Injection (.25MM)
40	105-3730	1	Shim-Pump, Injection (.30MM)
50	98-9361	3	Bolt-HSH
60	98-9438	3	Stud
70	98-9440	3	Nut-Cap
80	98-7699	6	Washer-Spring
90	98-9464	1	Bolt-Joint
100	98-9445	2	Gasket
110	98-9430	1	Screw
120	98-9446	1	Gasket

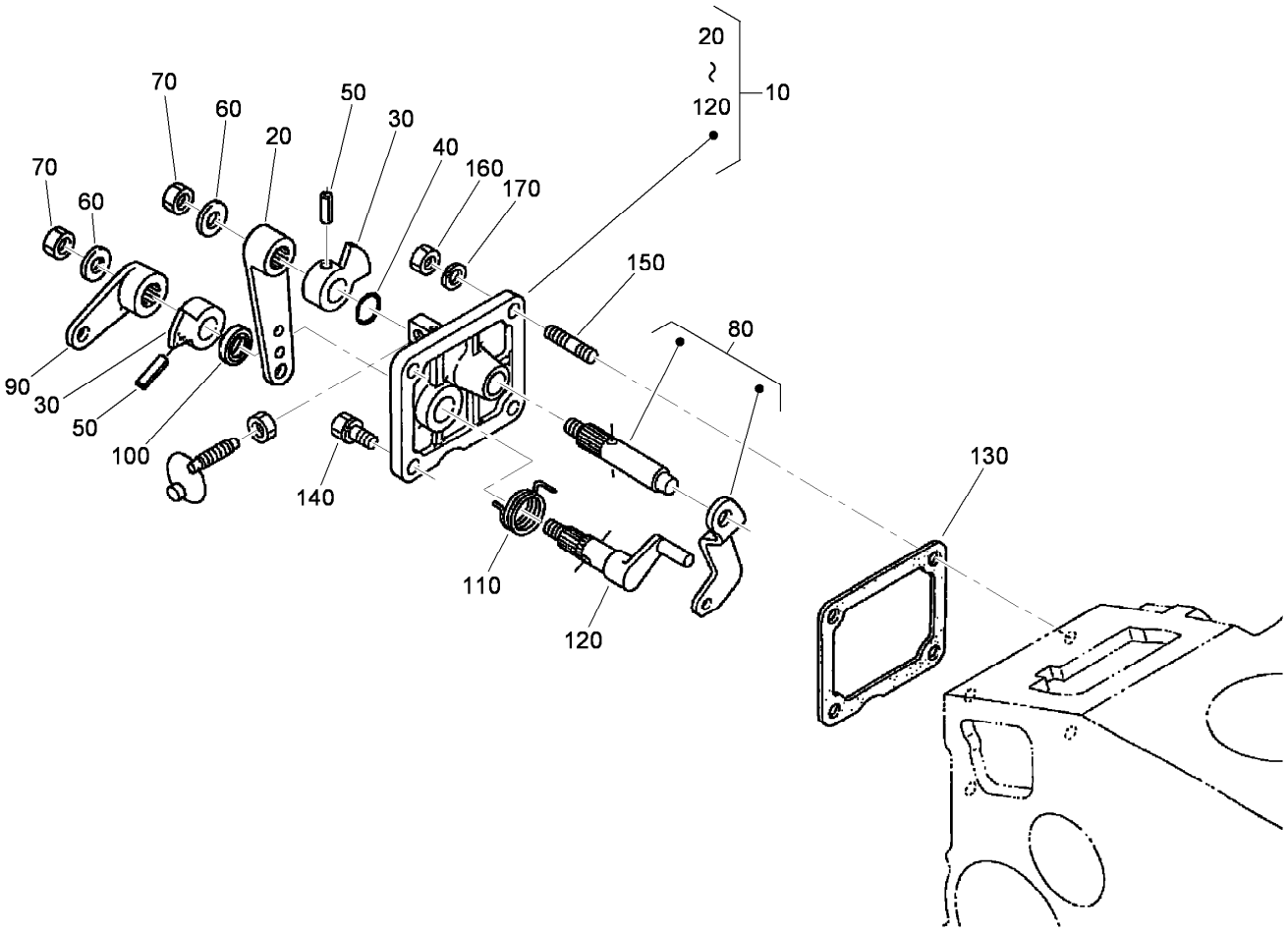

Speed Control Plate Assembly

Ref.	*Part Number*	*Qty.*	*Description*
10	105-3735	1	Control Plate ASM
20	98-9662	1	Lever-Control, Speed
30	98-9572	2	Lever-Control, Speed
40	105-3788	1	O-Ring
50	98-7602	2	Pin-Spring
60	98-9594	2	Washer-Plain
70	98-9589	2	Nut
80	98-9658	1	Governor Lever ASM
90	98-9663	1	Lever-Stop, Engine
100	98-7601	1	Seal-Oil
110	98-9472	1	Spring-Return
120	98-9664	1	Shaft-Lever, Stop
130	98-9637	1	Gasket
140	98-7692	2	Bolt
150	105-3710	2	Stud
160	98-7572	2	Nut
170	98-7699	2	Washer-Spring

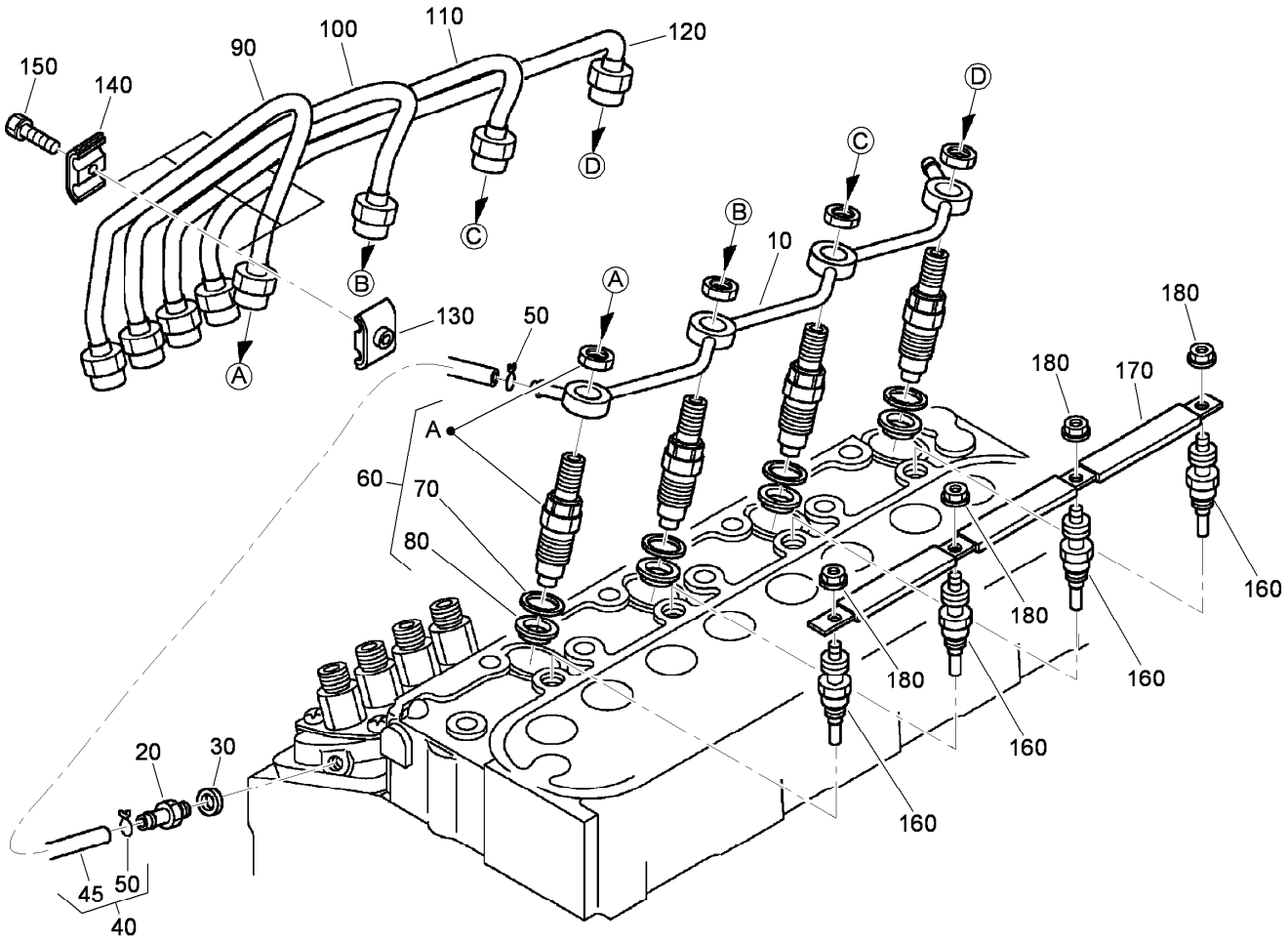

Nozzle Holder and Glow Plug Assembly

Ref.	*Part Number*	*Qty.*	*Description*
10	105-3737	1	Over Flow Pipe ASM
20	98-9431	1	Screw-Bleeder, Air
30	98-7654	1	Gasket
40	98-9420	1	Overflow Pipe ASM
45	112-0182	1	Pipe-Overflow
50	98-7671	2	Clip-Pipe
60	108-2866	4	Nozzle Holder Kit
70	98-7676	4	Gasket
80	98-7677	4	Seal-Heat
90	98-9622	1	Pipe-Injection
100	98-9654	1	Pipe-Injection
110	98-9655	1	Pipe-Injection
120	105-3738	1	Pipe-Injection
130	98-7682	3	Clamp-Pipe
140	98-7683	3	Clamp-Pipe
150	98-7684	3	Screw (W/Washer)
160	98-9623	4	Plug-Glow
170	105-3739	1	Cord-Plug, Glow
180	99-8377	4	Nut-Flange

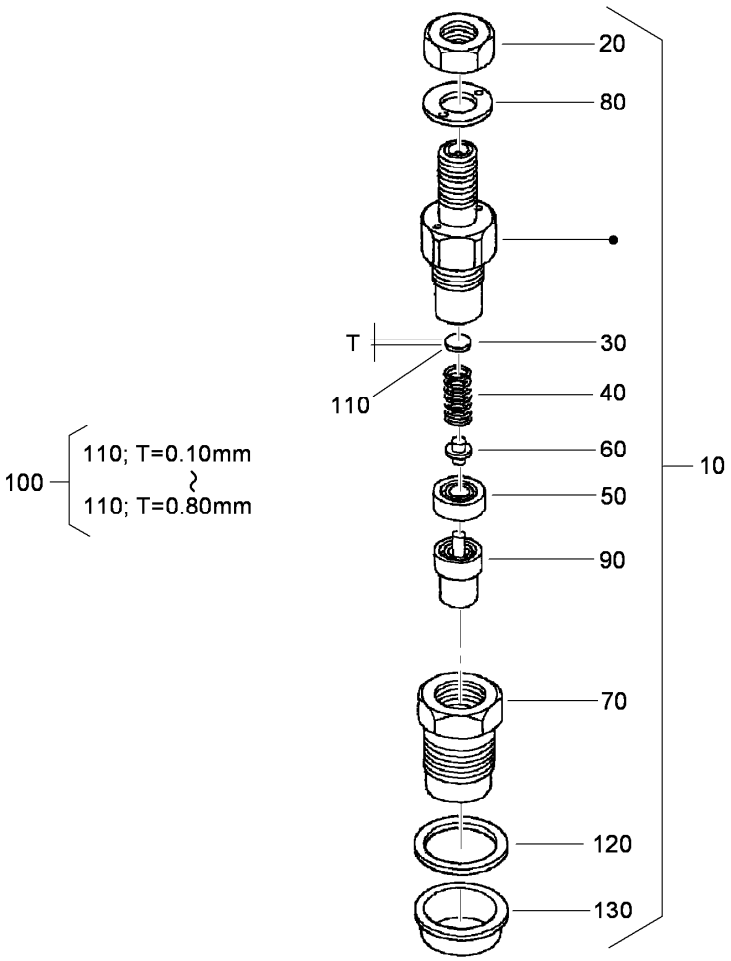

Nozzle Holder Component Assembly

Ref.	*Part Number*	*Qty.*	*Description*
10	108-2866	4	Nozzle Holder Kit
20	99-8301	4	Nut
30	99-8302	4	Washer-Adjusting
40	99-8303	4	Spring-Nozzle
50	99-8304	4	Spacer-Distance
60	99-8305	4	Rod-Push
70	99-8306	4	Nut-Nozzle
80	99-8307	4	Washer-Plain
90	107-7826	4	Piece-Nozzle
100	99-8309	4	Adjusting Washer ASM
110	99-8310	4	Washer-Adjust (0.10MM)
110	99-8311	4	Washer-Adjust (0.20MM)
110	99-8312	4	Washer-Adjust (0.30MM)
110	99-8313	4	Washer-Adjust (0.40MM)
110	99-8314	4	Washer-Adjust (0.50MM)
110	99-8315	4	Washer-Adjust (0.52MM)
110	99-8316	4	Washer-Adjust (0.54MM)
110	99-8317	4	Washer-Adjust (0.56MM)
110	99-8318	4	Washer-Adjust (0.58MM)
110	99-8319	4	Washer-Adjust (0.80MM)
120	98-7676	4	Gasket
130	98-7677	4	Seal-Heat

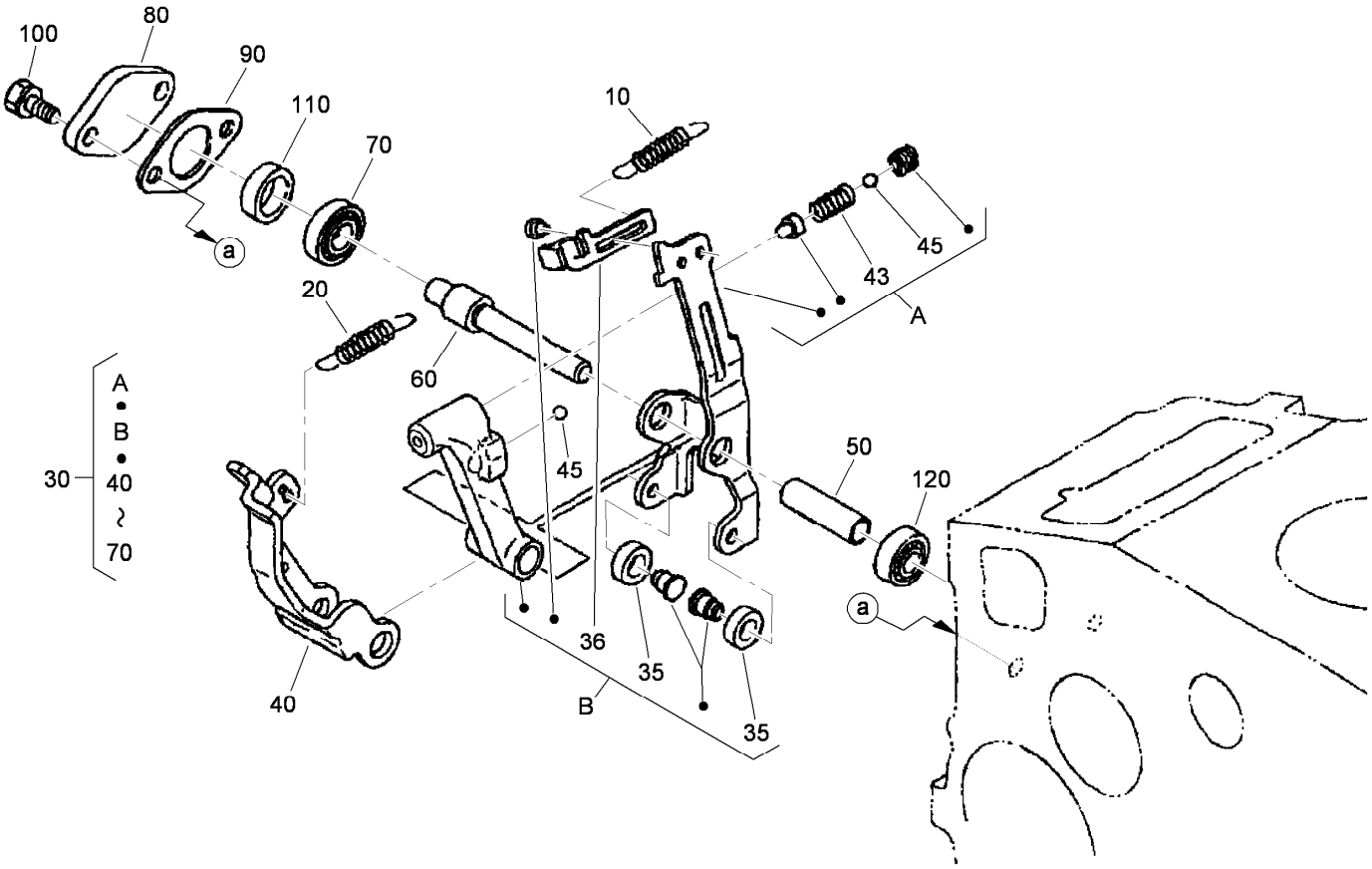

Governor Assembly

Ref.	*Part Number*	*Qty.*	*Description*
10	105-3741	1	Spring-Start
20	98-9681	1	Spring-Governor
30	108-4427	1	Fork Lever ASM
35	98-9692	2	Roller
36	107-9083	1	Lever-Thrust
40	107-9084	1	Lever-Fork
43	108-2867	1	Spring
45	98-7580	2	Ball
50	107-9085	1	Shaft-Lever, Fork
60	107-9086	1	Shaft-Lever, Fork
70	98-9570	1	Bearing-Miniaturize
80	115-4122	1	Cover-Shaft, Fork Lever
90	98-9682	1	Gasket
100	98-9350	2	Bolt
110	98-9567	1	Collar
120	98-9571	1	Bearing-Miniaturize

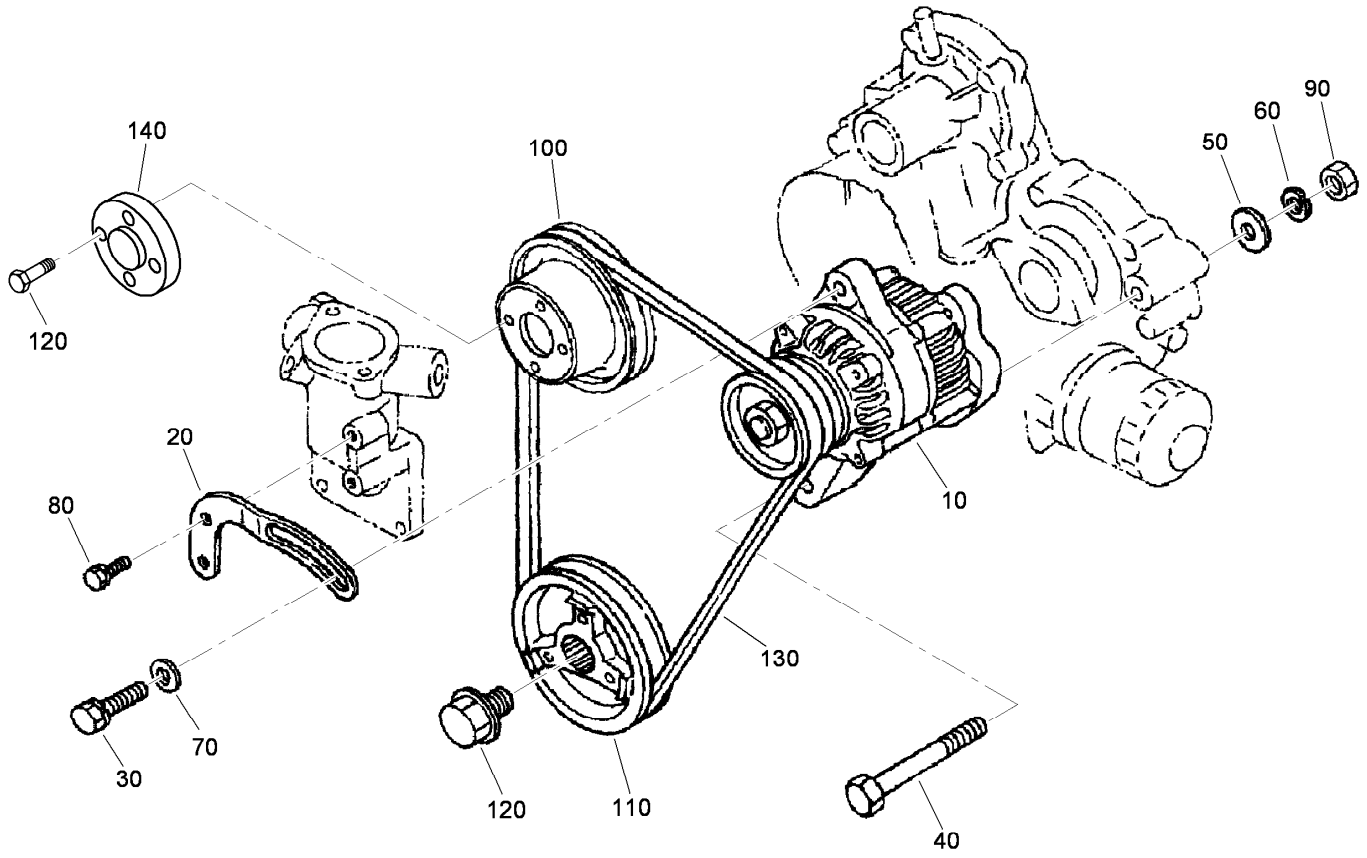

Alternator and Pulley Assembly

Ref.	*Part Number*	*Qty.*	*Description*
10	98-9474	1	Alternator ASM
20	112-7047	1	Stay-Dynamo
30	108-7088	1	Bolt
40	98-9360	1	Bolt
50	98-7696	1	Washer-Plain
60	98-7738	1	Washer-Spring
70	100-9233	1	Washer-Plain
80	98-7692	1	Bolt
90	98-7737	1	Nut
100	110-0972	1	Pulley
110	105-3745	1	Pulley-Drive, Fan
120	98-9585	1	Bolt
130	98-9676	1	V-Belt
140	108-2872	1	Collar-Fan

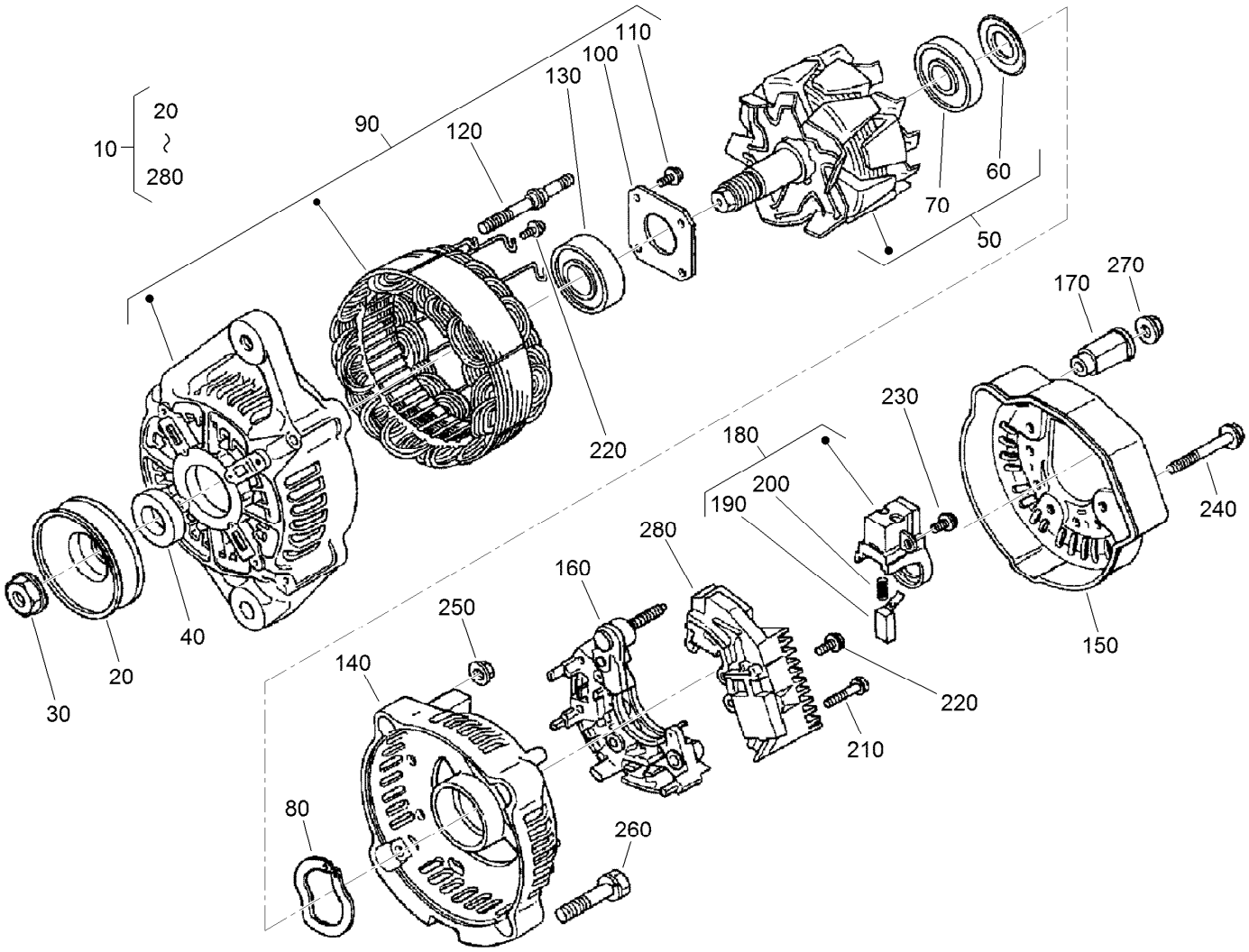

Alternator Components Assembly

Ref.	Part Number	Qty.	Description
10	98-9474	1	Alternator ASM
20	98-9453	1	Pulley-Dynamo
30	98-7708	1	Nut
40	98-7709	1	Collar
50	107-0136	1	Rotor ASM
60	98-7711	1	Cover-Bearing
70	107-0138	1	Bearing-Ball
80	98-7713	1	Washer-Thrust
90	107-0139	1	Drive End Frame ASM
100	98-7715	1	Plate-Retainer
110	98-7716	4	Screw-Head, Round
120	98-7717	2	Bolt-Through
130	133-2811	1	Bearing
140	107-9087	1	Frame-End

Ref.	Part Number	Qty.	Description
150	107-0140	1	Cover-End
160	98-7721	1	Rectifier ASM
170	98-7722	1	Bushing-Insulation
180	107-0141	1	Brush Holder ASM
190	98-7724	2	Brush
200	98-7725	2	Spring-Brush
210	98-7726	2	Screw-Head, Round
220	98-7727	6	Screw-Head, Round
230	98-7728	1	Screw-Head, Round
240	98-7729	3	Bolt
250	98-7730	2	Nut
260	98-7731	2	Bolt
270	98-7732	1	Nut
280	110-3799	1	Regulator ASM

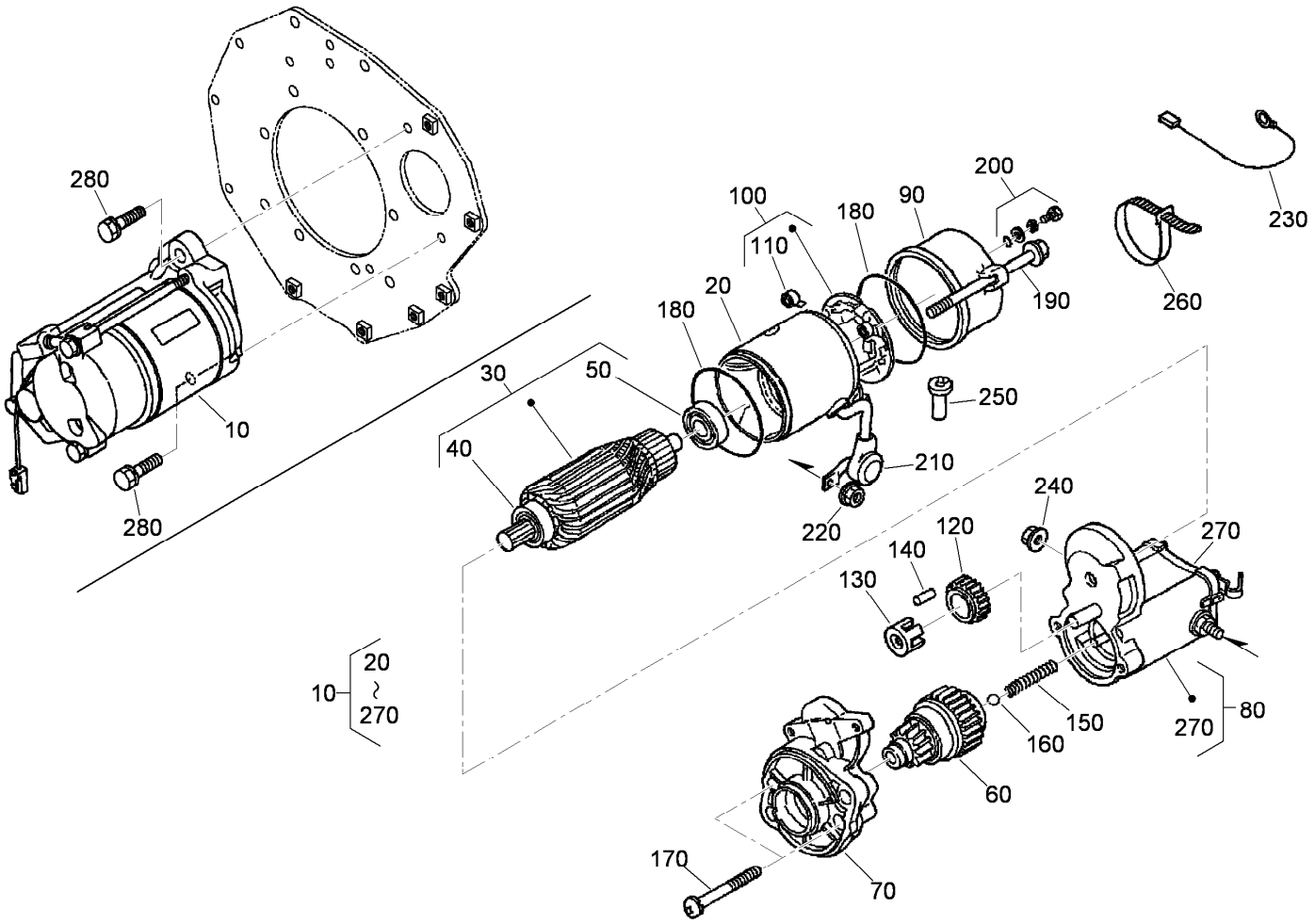

Starter Assembly

Ref.	Part Number	Qty.	Description
10	98-9705	1	Starter ASM
20	104-8608	1	Yoke ASM
30	98-7742	1	Armature ASM
40	98-7744	1	Bearing
50	98-7743	1	Bearing
60	99-8373	1	Clutch-Running, Over
70	99-8374	1	Frame-End, Drive
80	105-3746	1	Magnetic Switch ASM
90	98-7748	1	Frame-End
100	98-7749	1	Brush Holder ASM
110	98-7750	4	Spring-Brush
120	98-7751	1	Gear
130	98-7752	1	Retainer
140	98-7753	5	Roller

Ref.	Part Number	Qty.	Description
150	98-7754	1	Spring
160	98-7755	1	Ball
170	98-7756	2	Bolt
180	98-7757	2	O-Ring
190	100-9240	2	Bolt
200	98-7758	2	Bolt ASM
210	99-8375	1	Cover
220	99-8371	1	Nut-Hex
230	98-9711	1	Cord-Solenoid, Stop
240	99-8376	1	Nut-Hex
250	98-7759	1	Pipe-Drain
260	98-9712	1	Band-Cover
270	105-2886	1	Cover ASM
280	98-7697	2	Bolt

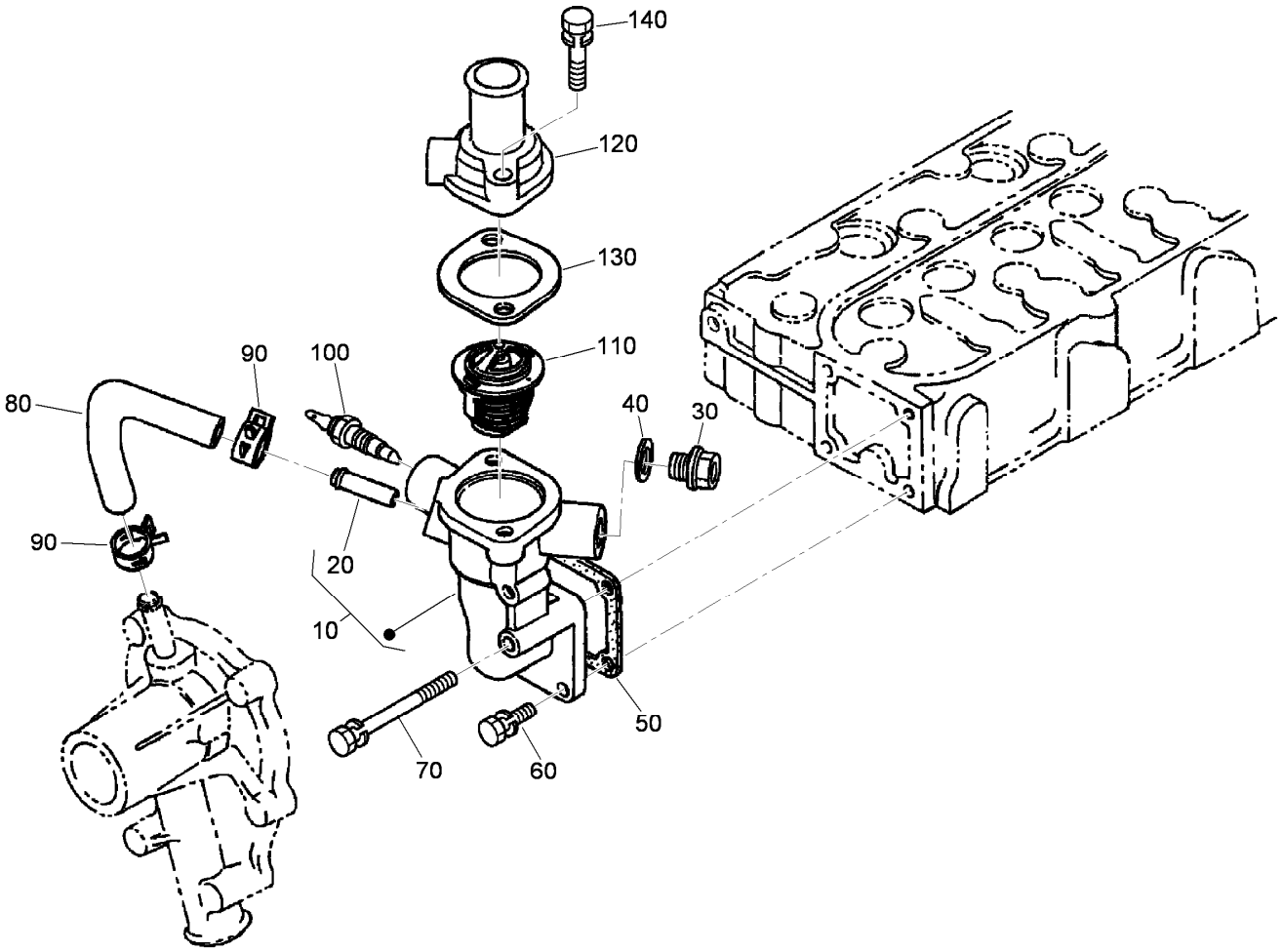

Water Flange and Thermostat Assembly

Ref.	*Part Number*	*Qty.*	*Description*
10	98-9713	1	Water Flange ASM
20	98-9580	1	Pipe-Return, Water
30	105-3747	1	Plug
40	99-3583	1	Gasket
50	98-9638	1	Gasket-Flange, Water
60	98-7692	3	Bolt
70	98-9356	1	Bolt
80	98-9578	1	Pipe-Return, Water
90	98-9579	2	Band-Pipe
100	112-0183	1	Switch-Thermometer
110	98-7778	1	Thermostat ASM
120	98-9471	1	Cover-Thermostat
130	105-3748	1	Gasket-Thermostat
140	98-7777	2	Bolt

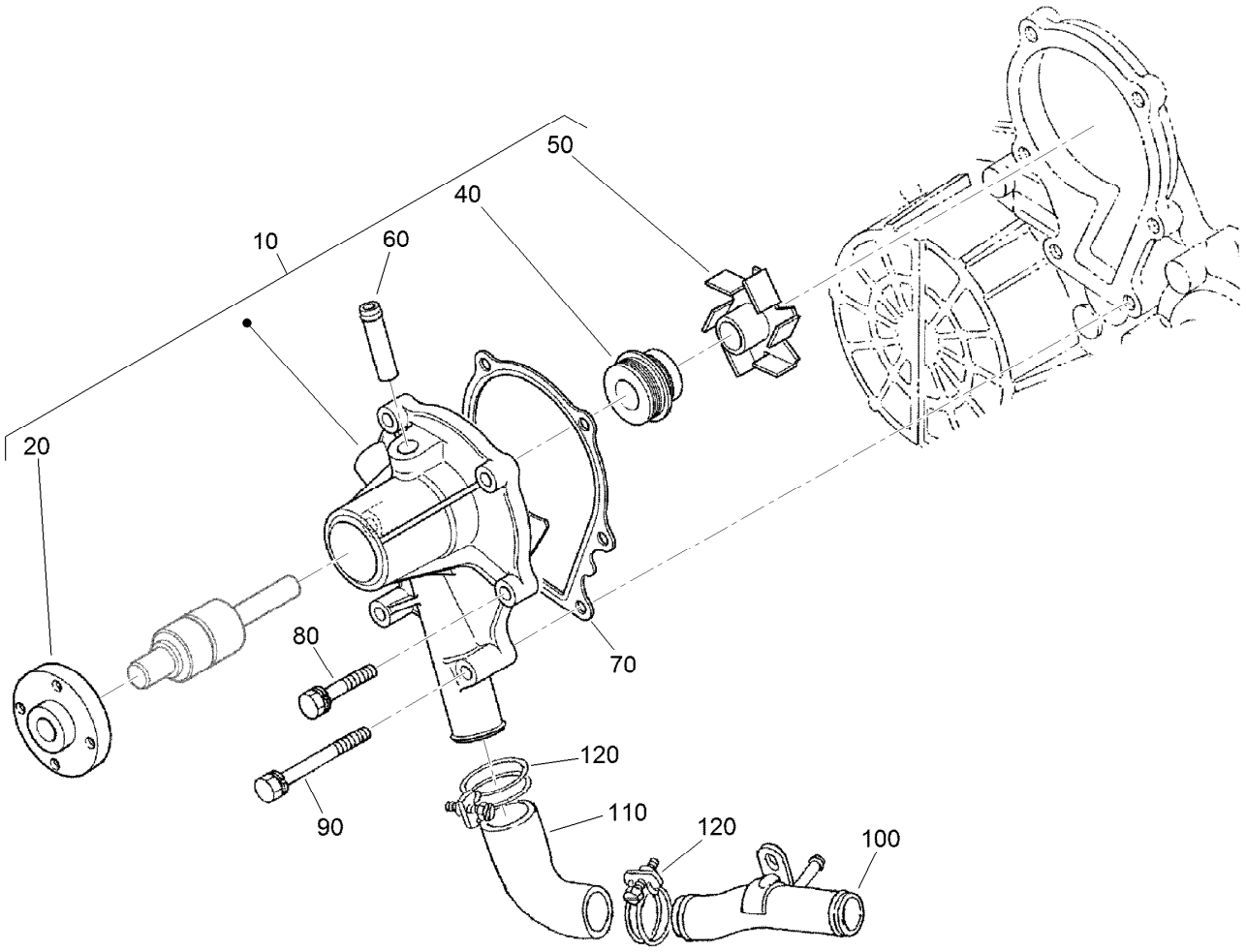

Water Pump Assembly

Ref.	*Part Number*	*Qty.*	*Description*
10	107-9089	1	Water Pump ASM
20	99-3516	1	Flange-Pump, Water
40	105-3750	1	Mechanical Seal ASM
50	112-7017	1	Impeller-Pump, Water
60	100-1932	1	Pipe-Return, Water
70	99-3454	1	Gasket-Pump, Water
80	98-9353	4	Bolt
90	107-9090	2	Bolt
100	99-8379	1	Pipe-Water
110	107-9091	1	Pipe-Water
120	98-9717	2	Clamp

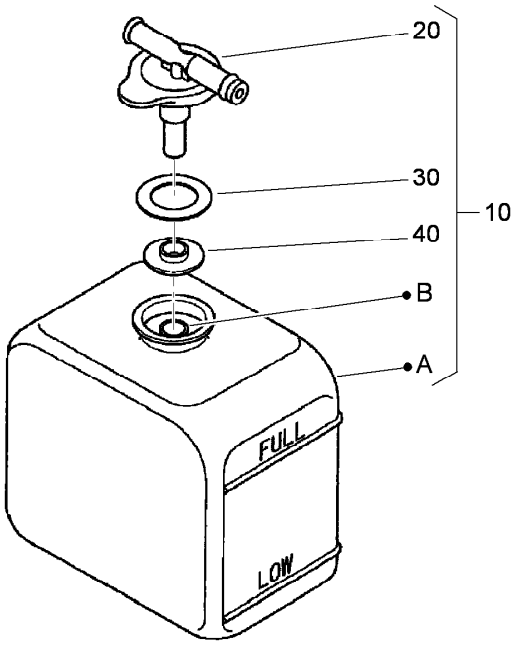

Overflow Bottle Assembly

Ref.	*Part Number*	*Qty.*	*Description*
10	104-9318	1	Bottle-Overflow
20	115-4132	1	Cap
30	105-3755	1	Gasket
40	105-3756	1	Plate

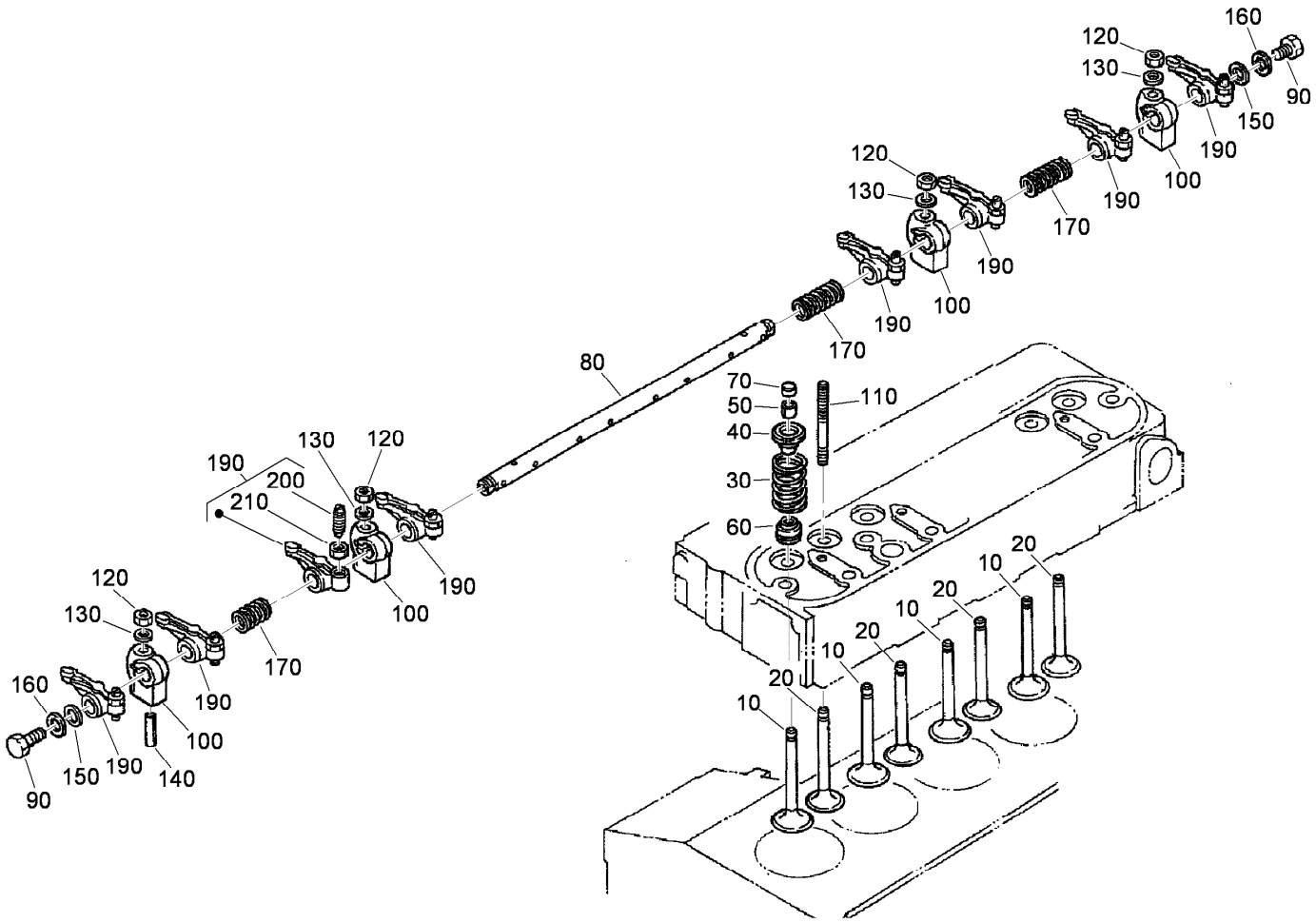

Valve and Rocker Arm Assembly

Ref.	*Part Number*	*Qty.*	*Description*
10	112-7018	4	Valve-Inlet
20	112-7019	4	Valve-Exhaust
30	98-9626	8	Spring-Valve
40	107-9092	8	Retainer-Spring
50	98-9390	8	Collet-Spring, Valve
60	99-8385	8	Seal-Stem, Valve
70	98-9497	8	Cap-Valve
80	105-3757	1	Shaft-Arm, Rocker
90	100-9265	2	Bolt
100	98-9505	4	Bracket-Arm, Rocker
110	98-9506	4	Stud
120	98-9393	4	Nut
130	98-9385	4	Washer-Flat
140	105-3758	2	Pin-Spring
150	98-9507	2	Washer-Shaft, Rocker Arm
160	110-3832	2	Washer-Plain
170	98-9504	3	Spring-Arm, Rocker
190	112-7020	8	Rocker Arm ASM
200	98-9502	8	Screw-Adjusting
210	98-9503	8	Nut

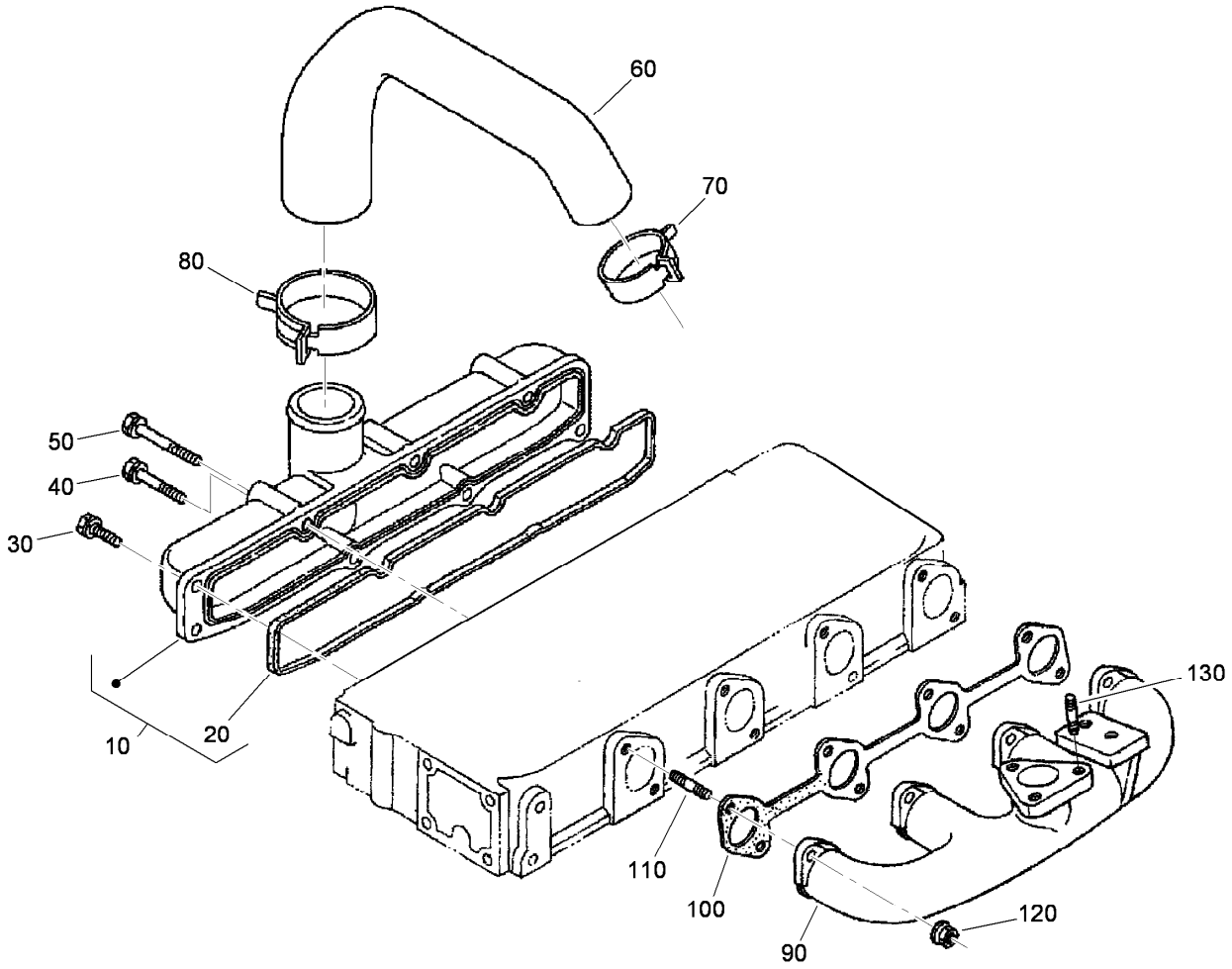

Inlet and Exhaust Manifold Assembly

Ref.	*Part Number*	*Qty.*	*Description*
10	105-3759	1	Inlet Manifold ASM
20	105-3760	1	Gasket-Manifold, Intake
30	98-7605	3	Bolt
40	98-9353	2	Bolt
50	105-3797	3	Bolt
60	115-4123	1	Hose-Inlet
70	115-3048	1	Clamp-Hose
80	115-3049	1	Clamp-Hose
90	108-4425	1	Manifold-Exhaust
100	105-3765	1	Gasket-Manifold, Exhaust
110	98-9588	8	Stud
120	98-9665	8	Nut
130	99-8342	3	Stud

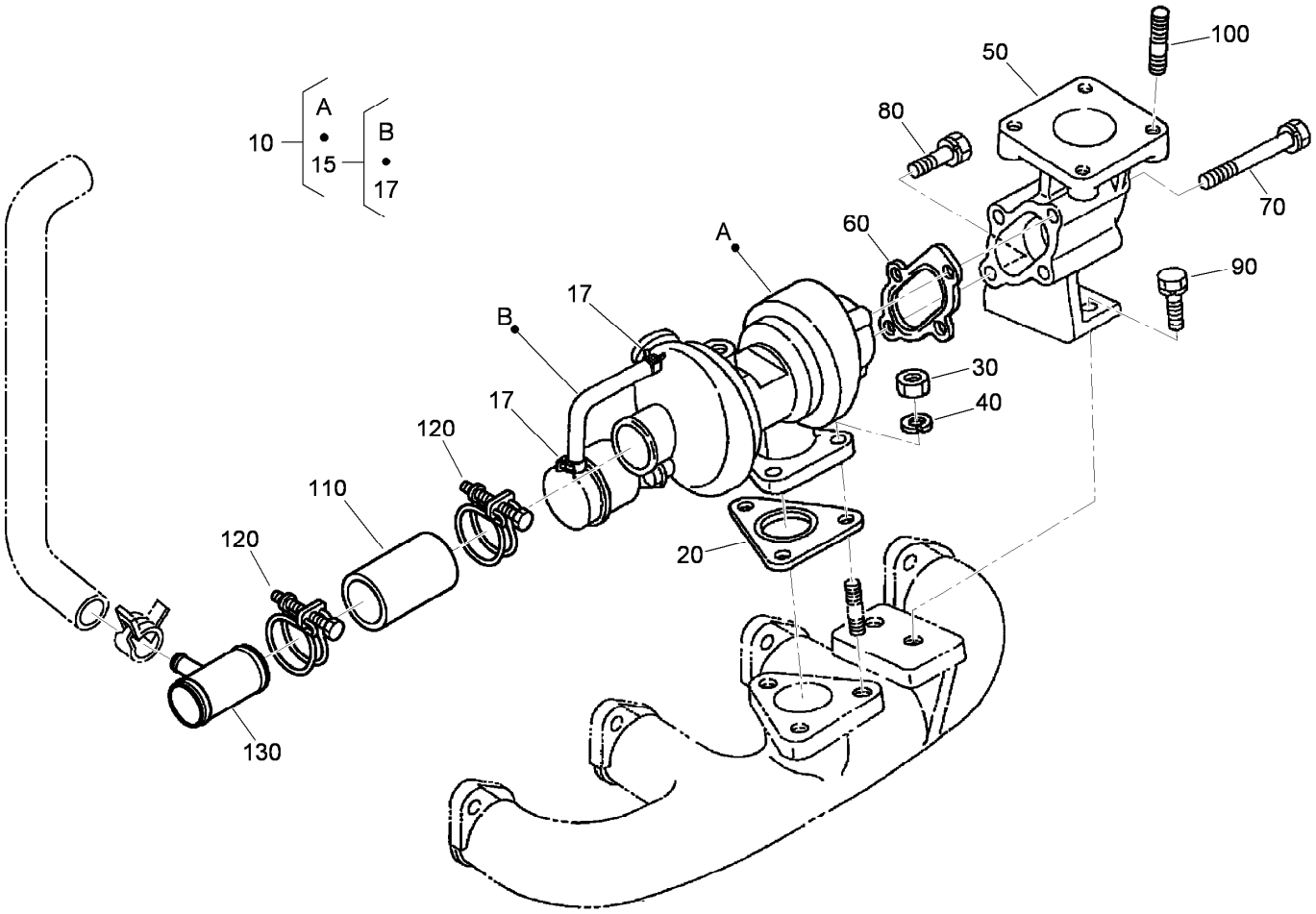

Turbo Charger Assembly

Ref.	*Part Number*	*Qty.*	*Description*
10	108-1412	1	Turbo Charger ASM
15	108-1413	1	Hose ASM
17	108-1414	2	Clamp-Hose
20	105-3767	1	Gasket
30	98-7534	3	Nut
40	105-2893	3	Washer-Spring
50	99-8335	1	Flange-Muffler
60	105-3768	1	Gasket
70	99-8336	3	Bolt
80	105-2895	1	Bolt
90	98-7610	2	Bolt
100	98-7769	4	Stud
110	115-4101	1	Tube-Inlet, Turbo
120	115-4102	2	Band
130	115-4103	1	Pipe-Inlet, Breather

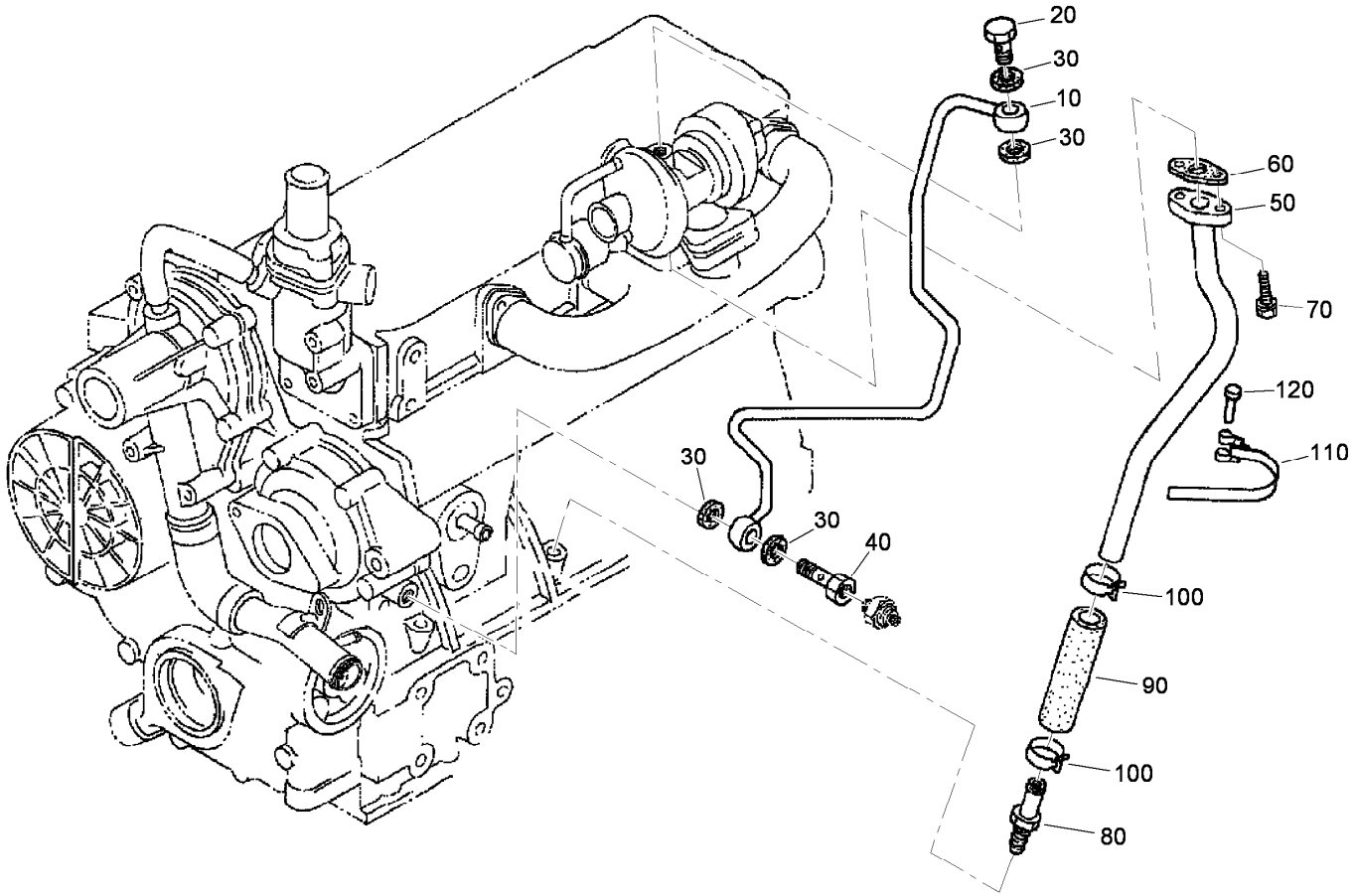

Oil Pipe (Turbo Charger) Assembly

Ref.	*Part Number*	*Qty.*	*Description*
10	108-4424	1	Oil Pipe ASM
20	115-4126	1	Bolt-Joint, Eye
30	99-8346	4	Gasket
40	98-9417	1	Bolt-Joint, Eye
50	108-4423	1	Oil Pipe ASM
60	108-4422	1	Gasket
70	98-7605	2	Bolt
80	105-3771	1	Oil Pipe ASM
90	98-9721	1	Pipe-Oil
100	98-9714	2	Clamp-Hose
110	98-9601	1	Clamp-Pipe
120	98-9591	1	Pin-Band

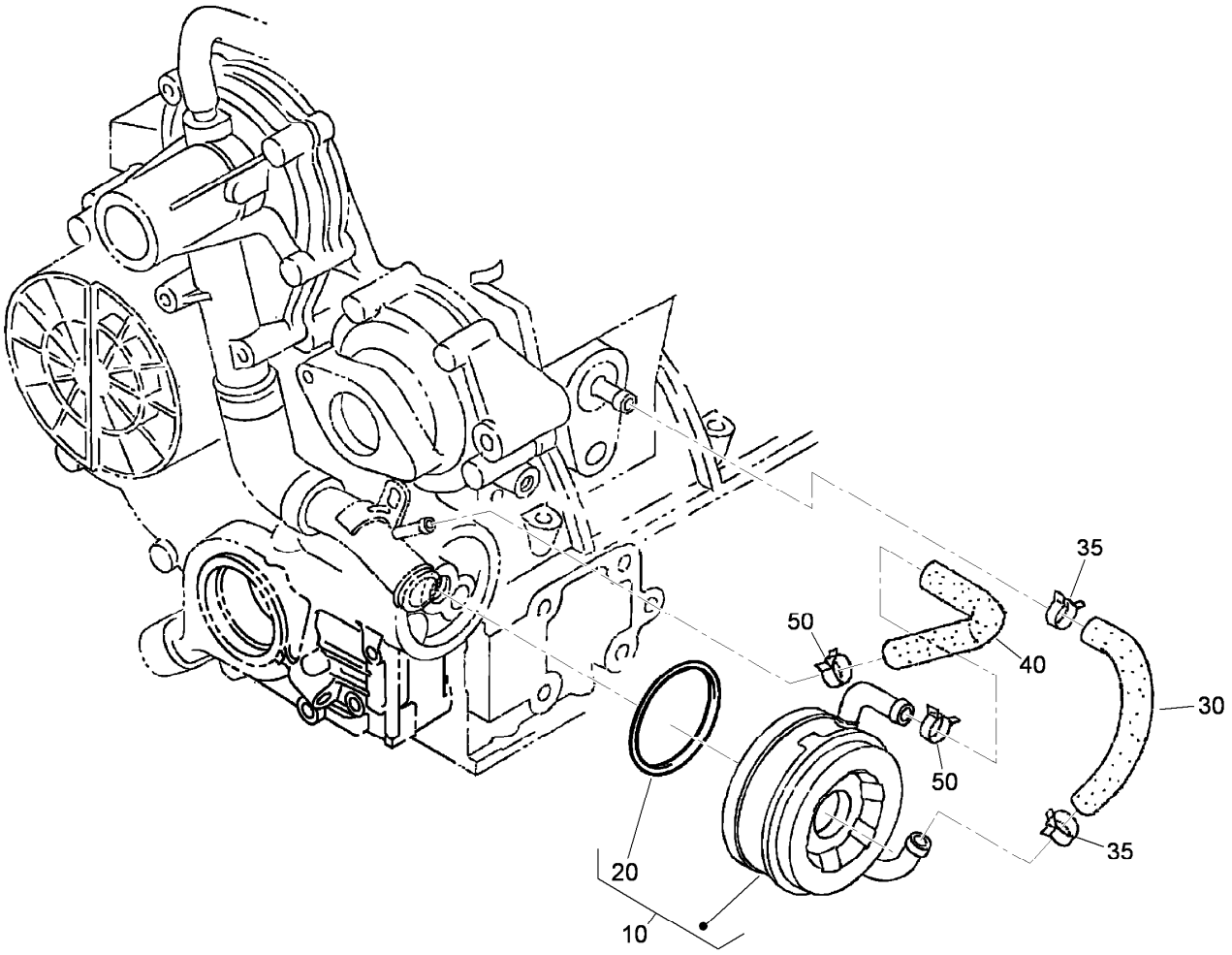

Oil Cooler Assembly

Ref.	*Part Number*	*Qty.*	*Description*
10	104-5158	1	Oil Cooler ASM
20	112-7030	1	O-Ring
30	98-9724	1	Pipe-Cooler, Oil
35	98-9579	2	Band-Pipe
40	98-9578	1	Pipe-Return, Water
50	98-9579	2	Band-Pipe

Attachments and Accessories

For 03966 — Reelmaster 5610-D Traction Unit

Product Name	Model/Part
Operator Cooling Fan	03247
Switch Panel-Universal Sunshade	03248
Operator Golf Ball Guard, Reelmaster 3100/3500/5010 or Groundsmaster 3500/4300 Series Traction Unit	03614
Verticutter for 7in Reel Cutting Unit	03619
8-Blade Radial Reel DPA Cutting Unit with 7in Reel	03638
8-Blade Forward Swept Reel DPA Cutting Unit with 7in Reel	03639
11-Blade Forward Swept Reel DPA Cutting Unit with 7in Reel	03641
7-in, 11 Blade ES (RR) DPA Cutting Unit	03643
Air Ride Seat Suspension Kit	03667
Turf Evaluator	04399
Wheel Weight Kit	104-1478
Premium All Purpose Grease (Tube)	108-1190
Rear Lift Cylinder Limit Kit	110-9604
Premium Engine Oil 10w30 (55 Gallon Drum)	121-6392
Premium Engine Oil 10w30 (5 Gallon Pail)	121-6393
Smooth Rear Tire	127-2796
Hi-Back Seat Cover	133-1308
Smooth Front Tire	133-2940
PX Hydraulic Fluid (5 Gal)	133-8086
PX Hydraulic Fluid (55 Gal)	133-8087
Pin and Lanyard Asm	136-8045
Beacon Kit	138-2699
Power Harness Kit (RM5XXX)	138-2994
Work Lights Kit, Groundsmaster and Reelmaster Traction Units with Universal Sunshade	140-1554
MVP Kit-Hyd Hose	145-2576
Mvp Kit 1000 Hour-rm5610 Kubota V1505	145-2579
Brush and Handle Kit	29-9100
White Universal Sunshade	30669
Red Universal Sunshade	30671
EU Light Kit	31579
New Red Paint - Gallon	361-11
Dark Metallic Gray Aerosol Paint	361-12
Semi-Gloss Black Spray Paint	361-9
Air Dry Red Paint - Qt	5340
Spark Arrestor	98-9099

Notes:

Notes:

Notes:



Count on it.