Form No. 3351-291

22″ Recycler®
Lawn Mower

Model No. 20008—Serial No. 240000001 and Up

Operator's Manual

Introduction

Read this manual carefully to learn how to operate and maintain your product properly and to avoid injury and product damage. You are responsible for operating the product properly and safely.

You may contact Toro directly at www.Toro.com for product and accessory information, help finding a dealer, or to register your product.

Whenever you need service, genuine Toro parts, or additional information, contact an Authorized Service Dealer or Toro Customer Service and have the model and serial numbers of your product ready. The illustration below identifies the location of the model and serial numbers on the product. Write the numbers in the space provided below:

Model #:

Serial #:

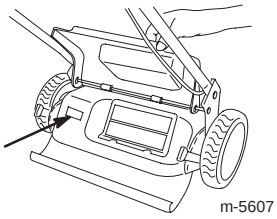

m-5607

This manual identifies potential hazards and has safety messages identified by the following words:

- **Danger** signals an extreme hazard that **will** cause serious injury or death if you do not follow the recommended precautions.
- **Warning** signals a hazard that **may** cause serious injury or death if you do not follow the recommended precautions.
- **Caution** signals a hazard that may cause minor or moderate injury if you do not follow the recommended precautions.

This manual uses two other words to highlight information. **Important:** calls attention to special mechanical information and **Note:** emphasizes general information worthy of special attention.

Warning

The engine exhaust from this product contains chemicals known to the State of California to cause cancer, birth defects, or other reproductive harm.

Important: This engine is not equipped with a spark arrester muffler. It is a violation of California Public Resource Code Section 4442 to use or operate this engine on any forest-covered, brush-covered or grass-covered land. Other states or federal areas may have similar laws.

This spark ignition system complies with Canadian ICES-002.

The enclosed Engine Owner's Manual is supplied for information regarding The U.S. Environmental Protection Agency (EPA) and the California Emission Control Regulation of emission systems, maintenance and warranty. Replacements may be ordered through the engine manufacturer.

Safety

This lawn mower meets or exceeds the CPSC blade safety requirements for walk-behind rotary lawn mowers and the B71.1 specifications of the American National Standards Institute in effect at the time of production.

Read and understand the contents of this manual before the engine is ever started.

⚠ **This is the safety alert symbol. It is used to alert you to potential personal injury hazards. Obey all safety messages that follow this symbol to avoid possible injury or death.**

Improperly using or maintaining this mower could result in injury or death. To reduce this potential, comply with the following safety instructions.

The following instructions have been adapted from the ANSI/OPEI standard B71.1—1998.

General Operation

- Read, understand, and follow all instructions on the machine and in the manual. Be thoroughly familiar with the controls and the proper use of the mower before starting.
- Do not put hands or feet near or under rotating parts. Keep clear of the discharge opening at all times.
- Only allow responsible individuals, who are familiar with the instructions, to operate the mower.
- Clear the area of objects such as rocks, toys, wire, bones, sticks etc., which could be picked up and thrown by the blade.

© 2003—The Toro Company
8111 Lyndale Ave., Bloomington, MN 55420, USA
Printed in the USA
All Rights Reserved
Original Instructions (EN)
Register your product at www.Toro.com

- Be sure the area is clear of other people before mowing. Stop mower if anyone enters the area.
- Do not operate the mower when barefoot or wearing open sandals. Always wear substantial foot wear.
- Do not pull mower backwards unless absolutely necessary. Look down and behind before and while moving backwards.
- Do not operate the mower without proper guards, plates, grass catcher or other safety protective devices in place.
- See the Toro instructions for proper operation and installation of accessories. Only use Toro accessories.
- Stop the blade when crossing gravel drives, walks, or roads.
- Stop the engine whenever you leave the equipment, before cleaning the mower or unclogging the chute.
- Shut the engine off and wait until the blade comes to complete stop before removing grass catcher.
- Mow only in daylight or good artificial light.
- Do not operate the mower while under the influence of alcohol or drugs.
- Never operate mower in wet grass. Always be sure of your footing; keep a firm hold on the handle and walk; never run.
- Disengage the self-propelled mechanism before starting the engine.
- If the equipment should start to vibrate abnormally, stop the engine and check immediately for the cause. Vibration is generally a warning of trouble.
- Always wear safety goggles or safety glasses with side shields when operating mower.

Slope Operation

- Slopes are a major factor related to slip and fall accidents which can result in severe injury. All slopes require extra caution. If you feel uneasy on a slope, do not mow it.
- Mow across the face of slopes; never up and down. Exercise extreme caution when changing direction on slopes.
- Remove objects such as rocks, tree limbs, etc. Watch for holes, ruts, or bumps. Tall grass can hide obstacles.
- Do not mow near drop-offs, ditches, or embankments. The operator could lose footing or balance.
- Do not mow excessively steep slopes.
- Do not mow on wet grass. Reduced footing could cause slipping.

Children

Tragic accidents can occur if the operator is not alert to the presence of children. Children are often attracted to the mower and the mowing activity. Never assume that children will remain where you last saw them.

- Keep children out of the mowing area and under the watchful care of a responsible adult
- Be alert and turn mower off if children enter the area.
- Before and while moving backwards, look behind and down for small children.
- Never allow children to operate the mower.
- Use extra care when approaching blind corners, shrubs, trees, or other objects that may obscure vision.

Service

- Use extra care in handling gasoline. It is flammable and vapors are explosive.
  - Use only an approved container.
  - Never remove gas cap or add fuel with the engine running. Allow engine to cool before refueling. Do not smoke.
  - Never refuel the machine indoors.
  - Never store the machine or fuel container inside where there is an open flame, such as a water heater.
- Never run an engine inside a closed area.

Warning

Exhaust contains carbon monoxide, an odorless, deadly poison that can kill you.

Do not run the engine indoors or in an enclosed area.

- Never make adjustments or repairs with the engine running. Disconnect the spark plug wire, and keep the wire away from the plug to prevent accidental starting.
- Keep all nuts and bolts, especially blade attachment bolts, tight and keep equipment in good condition.
- Never tamper with safety devices. Check their proper operation regularly.

- Keep mower free of grass, leaves, or other debris build-up. Clean up oil or fuel spillage. Allow mower to cool before storing.
- Stop and inspect the equipment if you strike an object. Repair, if necessary, before restarting.
- Never attempt to make wheel height adjustments while the engine is running.
- Grass catcher components are subject to wear, damage, and deterioration, which could expose moving parts or allow objects to be thrown. Frequently check components and replace with genuine Toro parts, when necessary.
- Mower blades are sharp and can cut. Wrap the blade or wear gloves, and use extra caution when servicing them.
- Do not change the engine governor setting or overspeed the engine.

Safety/Instruction Decals

Important: Safety and instruction decals are located near areas of potential danger. Replace damaged decals.

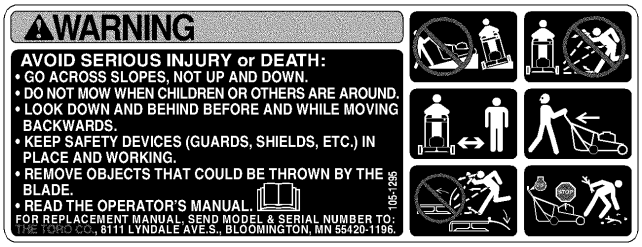

105-1295



105-6838

Product Overview

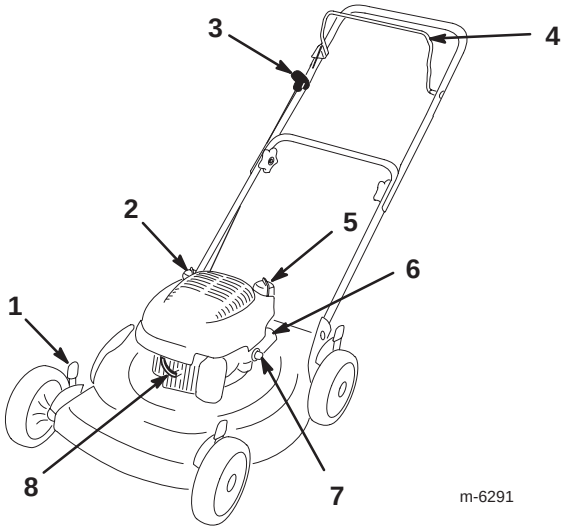

1. Cutting height lever
2. Oil fill/Dipstick
3. Recoil start handle
4. Blade control bar
5. Fuel tank cap
6. Air filter
7. Primer
8. Spark plug

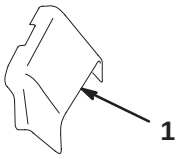

1. Side discharge chute

Setup

Important: Remove and discard the protective plastic sheet that covers the engine.

Unfolding the Handle

Warning

Folding or unfolding the handle improperly can damage the cables, causing an unsafe operating condition.

- **Do not damage the cables when folding or unfolding the handle.**
- **If a cable is damaged, contact an Authorized Service Dealer.**

1. Carefully move the upper handle forward until the handle halves are in line and nest together as shown.

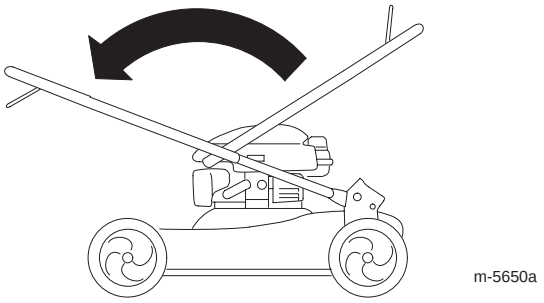

2. Tighten the handle knobs.

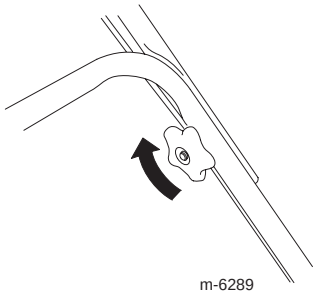

3. Rotate the handle rearward (as shown) until it clicks into place.

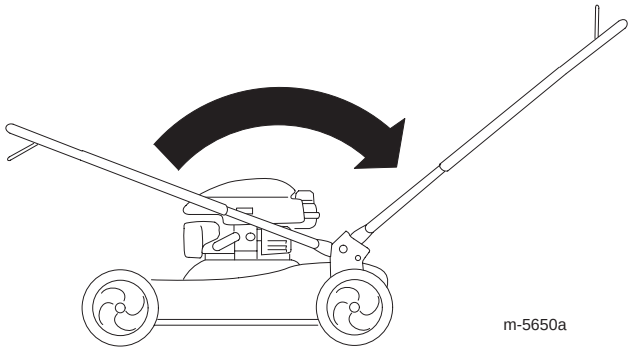

Filling the Engine with Oil

Your mower does not come with oil in the engine, but it does come with a 20 oz. (0.59 l) bottle of oil.

1. Remove the dipstick.

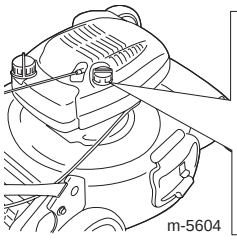
m-5604

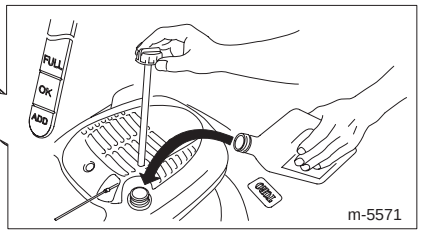

m-5571

2. **Slowly** pour oil into the oil fill tube to raise the oil level to the **Full** mark on the dipstick. **Do not overfill.**

3. Install the dipstick securely.

Important: **Change the engine oil after the first 2 operating hours;** change it yearly thereafter. Refer to Changing the Engine Oil on page 10.

Max. fill: 20 oz., type: SAE 30W detergent oil with an API service classification of SJ or SL.

Before Operating

Danger

Gasoline is extremely flammable and explosive. A fire or explosion from gasoline can burn you and others.

- **To prevent a static charge from igniting the gasoline, place the container and/or mower directly on the ground before filling, not in a vehicle or on an object.**
- **Fill the tank outdoors when the engine is cold. Wipe up spills.**
- **Do not handle gasoline when smoking or around an open flame or sparks.**
- **Store gasoline in an approved fuel container, out of the reach of children.**

Warning

Adjusting the cutting height may bring you into contact with the moving blade, causing serious injury.

- **Stop the engine and wait for all moving parts to stop.**
- **Do not put your fingers under the housing when adjusting the cutting height.**

Filling the Fuel Tank

Fill the fuel tank with fresh unleaded regular gasoline from a major name-brand service station.

Important: To reduce starting problems next season, add fuel stabilizer to the fuel all season, mixing it with gasoline less than 30 days old.

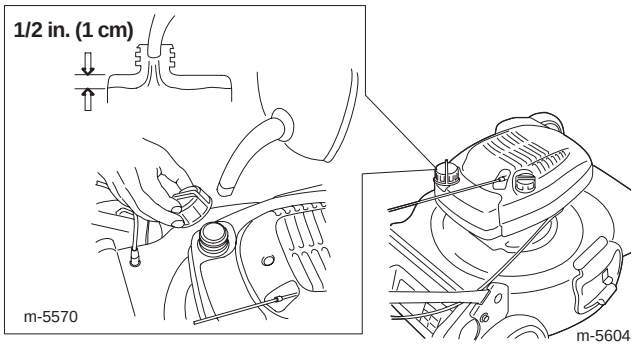

Checking the Engine Oil Level

1. Remove the dipstick, wipe it clean, and fully install the dipstick.

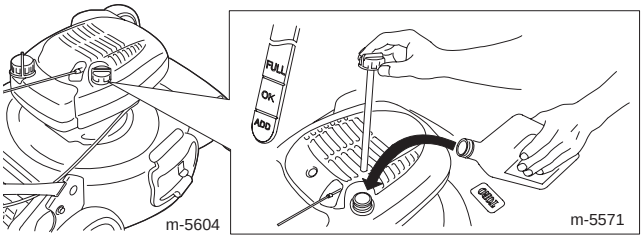

2. Remove the dipstick and check the oil level. If the oil level is below the **Add** mark on the dipstick, **slowly** pour oil into the oil fill tube to raise the oil level to the **Full** mark on the dipstick. **Do not overfill.** (Max. fill: 20 oz., type: SAE 30 detergent oil with an API service classification of SJ or SL.)

3. Install the dipstick.

Adjusting the Cutting Height

Caution

If the engine has been running, the muffler will be hot and can severely burn you.

Keep away from the hot muffler.

Adjust the cutting height as desired. Set all four wheels to the same height.

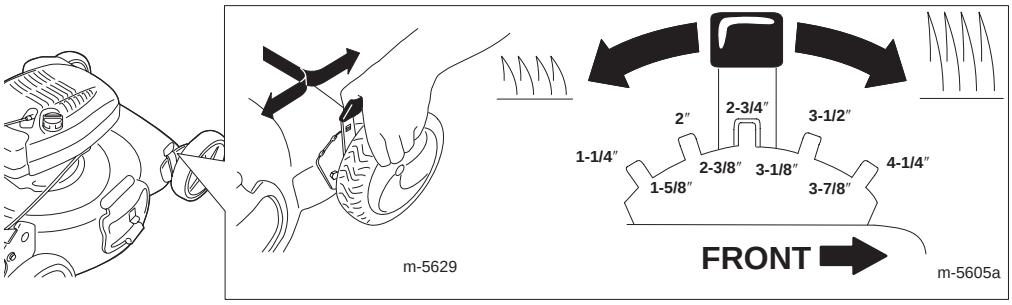

Adjusting the Handle Height

Squeeze the bottom of the handle halves together (as shown) and change the handle holes in which the pins (A) are mounted, as follows:

- Raise the handle using hole (B).
- Lower the handle using hole (C).

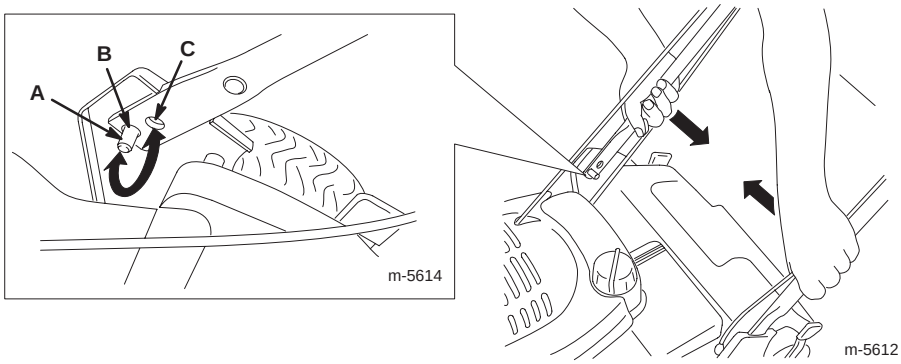

Operation

Starting the Engine

1. Firmly push in the primer 3 times with your thumb, holding the primer in for a second before releasing it each time.

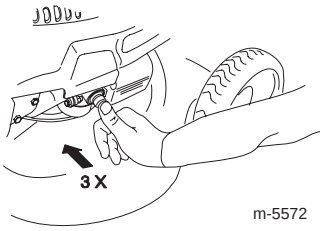

m-5572

Note: If the air temperature is below 55°F (13°C), firmly push the primer in 5 times.

2. Hold the blade control bar (A) against the handle.

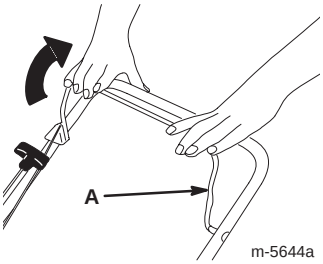

m-5644a

3. Start the engine using the recoil starter.

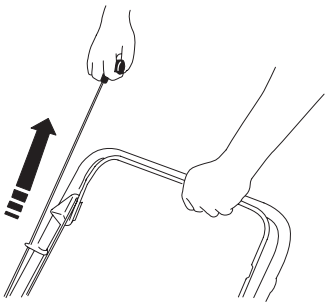
m-5645a

4. If the mower does not start in 1 or 2 pulls, press the primer button 1 or 2 times and try starting it again.

Stopping the Engine

To stop the engine, release the blade control bar.

Important: When you release the blade control bar, both the engine and blade should stop within 3 seconds. If they do not stop properly, stop using your mower immediately and contact your Authorized Service Dealer.

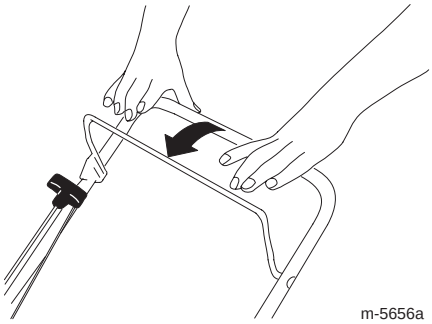
m-5656a

Recycling the Clippings

Your mower comes from the factory ready to recycle the grass and leaf clippings back into the lawn.

If the side discharge chute is on the mower, remove it and lock the side discharge door (refer to Removing the Side Discharge Chute on page 8) before recycling the clippings.

Important: Ensure that the rear discharge plug is in place before you recycle the clippings.

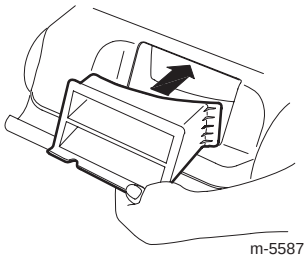
m-5587

Side Discharging the Clippings

Use the side discharge for cutting very tall grass.

Important: Ensure that the rear discharge plug is in place before you side discharge the clippings.

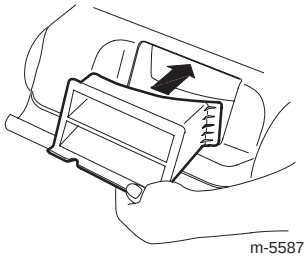
m-5587

Installing the Side Discharge Chute

1. Unlock the side discharge door.

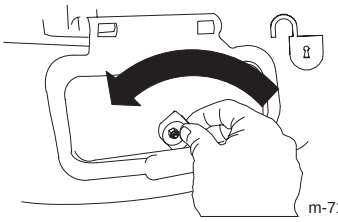
m-7195

2. Lift open the side discharge door.

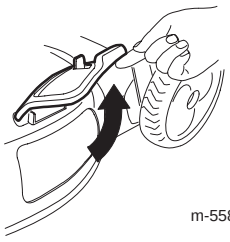
m-5584

3. Install the side discharge chute and close the door onto the chute.

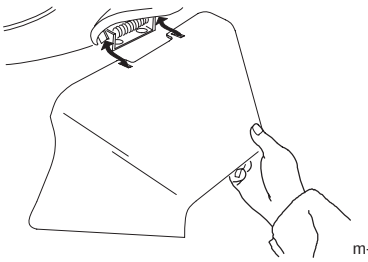
m-5585

Removing the Side Discharge Chute

To remove the side discharge chute, reverse the steps above.

Important: Lock the side discharge door after you close it.

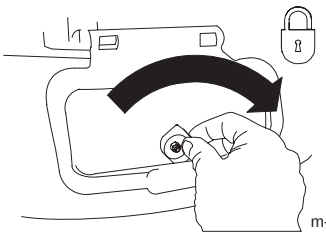
m-7196

Operating Tips

- Clear the area of sticks, stones, wire, branches, and other debris that the blade could hit.
- Avoid striking solid objects with the blade. Never deliberately mow over any object.
- If the mower strikes an object or starts to vibrate, immediately stop the engine, disconnect the wire from the spark plug, and examine the mower for damage.
- For best performance, install a new blade before the cutting season begins.
- Replace the blade when necessary with a Toro replacement blade.

Cutting Grass

- Cut only about a third of the grass blade at a time. Do not cut below the 2-inch (51 mm) setting unless the grass is sparse or it is late fall when grass growth begins to slow down. Refer to Adjusting the Cutting Height on page 6.
- When cutting grass over 6 inches (15 cm) tall, mow at the highest cutting height setting and walk slower; then mow again at a lower setting for the best lawn appearance. If the grass is too long, the mower may plug and cause the engine to stall.
- Mow only dry grass or leaves. Wet grass and leaves tend to clump on the yard and can cause the mower to plug or the engine to stall.

Warning

Wet grass or leaves can cause serious injury if you slip and contact the blade. Mow only in dry conditions.

- Alternate the mowing direction. This helps disperse the clippings over the lawn for even fertilization.

If the finished lawn appearance is unsatisfactory, try one or more of the following:

- Replace the blade or have it sharpened.
- Walk at a slower pace while mowing.
- Raise the cutting height on your mower.
- Cut the grass more frequently.
- Overlap cutting swaths instead of cutting a full swath with each pass.
- Set the cutting height on the front wheels one notch lower than the rear wheels. For example, set the front wheels at 2 inches (51 mm) and the rear wheels at 2-3/8 inches (60 mm).

Cutting Leaves

- After cutting the lawn, ensure that half of the lawn shows through the cut leaf cover. You may need to make more than one pass over the leaves.
- If there are more than 5 inches (13 cm) of leaves on the lawn, set the front cutting height one or two notches higher than the rear cutting height.
- Slow down your mowing speed if the mower does not cut the leaves finely enough.
- If you mow over oak leaves, you can add lime to the grass in the spring to reduce the acidity of the leaves.

Maintenance

Note: Determine the left and right sides of the mower by standing in the operating position.

Recommended Maintenance Schedule

Important: Refer to your engine operator's manual for additional maintenance procedures.

Maintenance Service Interval	Maintenance Procedure
Each Use	• Check the engine oil level. • Remove grass clippings and dirt from under the housing.
1 Year (25 Hours)[1]	• Replace the air filter; replace it more frequently in dusty operating conditions. • Change the engine oil.[2] • Replace the blade or have the blade sharpened; replace it or have it sharpened more frequently if the edge dulls quickly.
4 Years (100 Hours)[1]	• Replace the spark plug (refer to your engine operator's manual). • Clean the cooling system (refer to your engine operator's manual).
Annual Storage	• Empty the fuel tank before repairs as directed or before annual storage.

[1]Whichever comes first

[2]Change the engine oil after the first 2 operating hours.

Preparing for Maintenance

1. Stop the engine and wait for all moving parts to stop.

2. Disconnect the spark plug wire from the spark plug and hook it onto the retaining post (A) before performing any maintenance procedure.

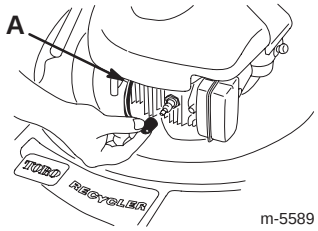

m-5589

3. After performing the maintenance procedure(s), connect the spark plug wire to the spark plug.

Note: Before tipping the mower to change the oil or replace the blade, allow the fuel tank to run dry through normal usage. If you must tip the mower prior to running out of fuel, use a hand fuel pump to remove the fuel. Always tip the mower onto the **right** side.

Warning

Tipping the mower may cause the fuel to leak. Gasoline is flammable, explosive and can cause personal injury.

Run the engine dry or remove the gasoline with a hand pump; never siphon.

Replacing the Air Filter

Replace the air filter yearly; replace it more frequently in dusty operating conditions.

Refer to Preparing for Maintenance on page 9.

1. Rotate the air filter cover to remove it.

2. Replace the air filter.

3. Install the cover.

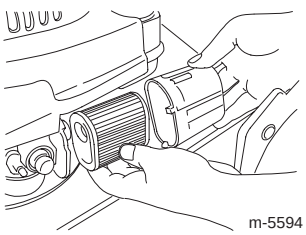
m-5594

Changing the Engine Oil

Change the engine oil after the first 2 operating hours; change it yearly thereafter.

Run the engine a few minutes before changing the oil to warm it. Warm oil flows better and carries more contaminants.

Refer to Preparing for Maintenance on page 9.

1. Remove the dipstick.

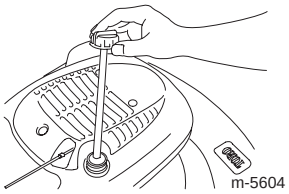
m-5604

2. Tip the mower onto the **right** side to drain the used oil out through the oil fill tube.

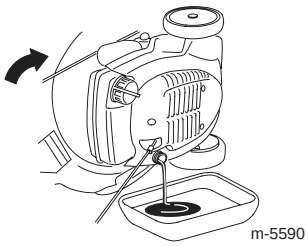
m-5590

3. **Slowly** pour oil into the oil fill tube until the oil level reaches the **Full** line on the dipstick. **Do not overfill.** (Max. fill: 20 oz., type: SAE 30W detergent oil with an API service classification of SJ or SL.)

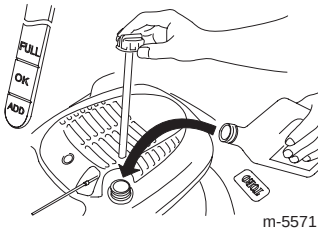

m-5571

4. Install the dipstick securely.

5. Dispose of the used oil properly at a local recycling center.

Replacing the Blade

Important: **You will need a torque wrench to install the blade properly.** If you do not have a torque wrench or are uncomfortable performing this procedure, contact an Authorized Service Dealer.

Examine the blade whenever you run out of gasoline. If the blade is damaged or cracked, replace it immediately. If the blade edge is dull or nicked, have it sharpened or replace it.

Warning

The blade is sharp; contacting the blade can result in serious personal injury.

Wear cloth or leather gloves when servicing the blade.

1. Disconnect the spark plug wire from the spark plug and hook it onto the retaining post. Refer to Preparing for Maintenance on page 9.

2. Tip the mower onto the **right** side.

3. Use a block of wood to hold the blade steady.

4. Remove the blade, saving all mounting hardware.

5. Install the new blade and all mounting hardware.

Important: Position the curved ends of the blade to point toward the mower.

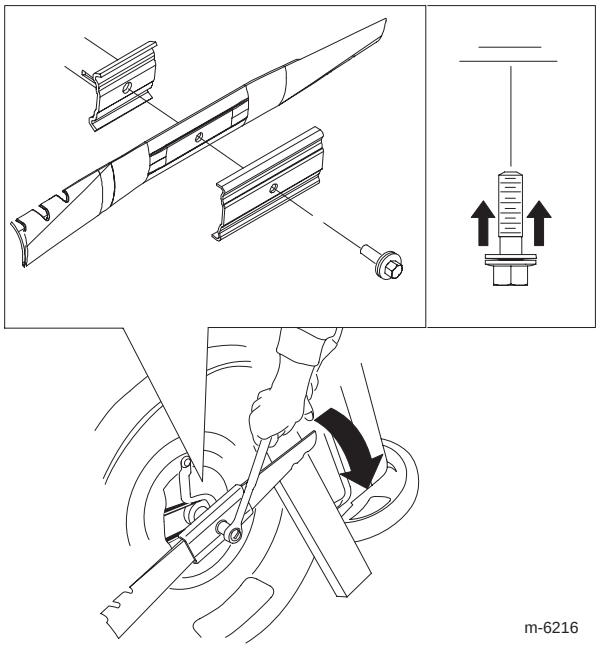
m-6216

6. **Use a torque wrench** to tighten the blade bolt to 60 ft-lb (82 N·m).

Important: **A bolt torqued to 60 ft-lb (82 N·m) is *very* tight. While holding the blade with a block of wood, put your weight behind the ratchet or wrench and tighten the bolt securely. This bolt is very difficult to overtighten.**

Cleaning the Mower

1. With the engine running on a flat paved surface, spray a stream of water in front of the **right rear** wheel.


1093

The water will splash into the path of the blade, cleaning out the clippings.

2. When no more clippings come out, stop the water and move the mower to a dry area.

Storage

Store the mower in a cool, clean, dry place.

Preparing the Mower for Storage

Warning

Gasoline vapors can explode.

- **Do not store gasoline more than 30 days.**
- **Do not store the mower in an enclosure near an open flame.**
- **Allow the engine to cool before storing it.**

1. On the last refueling of the year, add fuel stabilizer to the fuel as directed by the engine manufacturer.

2. Run the mower until the engine stops from running out of fuel.

3. Prime the engine and start it again.

4. Allow the engine to run until it stops. When you can no longer start the engine, it is sufficiently dry.

5. Disconnect the wire from the spark plug and connect the wire onto the retaining post.

6. Remove the spark plug, add 1 oz. (30 ml) of oil through the spark plug hole, and pull the starter rope **slowly** several times to distribute oil throughout the cylinder to prevent cylinder corrosion during the off-season.

7. Loosely install the spark plug.

8. Tighten all nuts, bolts, and screws.

Folding the Handle

Warning

Folding or unfolding the handle improperly can damage the cables, causing an unsafe operating condition.

- **Do not damage the cables when folding or unfolding the handle.**
- **If a cable is damaged, contact an Authorized Service Dealer.**

1. Loosen the handle knobs until you can move the upper handle freely.

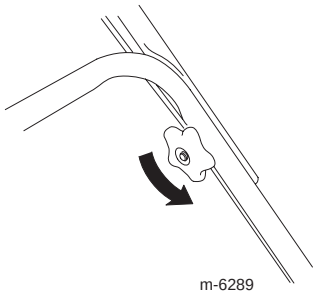

m-6289

2. Fold the upper handle forward as shown.

Important: Route the cables to the outside of the handle knobs as you fold the upper handle.

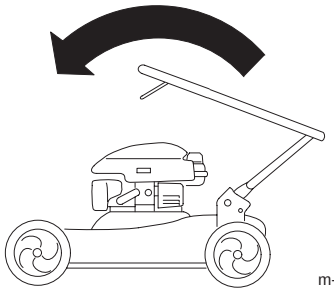

m-5659a

3. To unfold the handle, reverse the steps above.

Removing the Mower from Storage

1. Remove the spark plug and spin the engine rapidly using the starter to blow the excess oil from the cylinder.

2. Install the spark plug and tighten it with a torque wrench to 15 ft-lb (20 N·m).

3. Connect the wire to the spark plug.

The Toro Total Coverage Guarantee
and
The Toro Starting Guarantee on GTS-2 (Guaranteed to Start) Engines

A Full Two-Year Warranty (Limited Warranty for Commercial Use)

Conditions and Products Covered under The Toro Total Coverage Guarantee

The Toro Company and its affiliate, Toro Warranty Company, promise to repair any Toro Product used for residential purposes* if defective in materials or workmanship or if it stops functioning due to the failure of a component. The following time periods apply from the date of purchase:

Products	Warranty Period
• Recycler® Walk Mowers	2 year full warranty
• Batteries	1 year full warranty

This warranty covers the cost of parts and labor, but you must pay transportation costs. This warranty applies to all steel deck Toro Recycler Walk Mowers.

Conditions and Products Covered under The Toro Starting Guarantee

The Toro Company and its affiliate, Toro Warranty Company, guarantee that your Toro GTS-2 Engine, when used for residential purposes*, will start on the first or second pull for two years from the date of purchase, if you provide the routine maintenance it requires, or we will fix it free of charge.

This warranty covers the cost of parts and labor, but you must pay transportation costs. This warranty applies to all steel deck Toro Recycler Walk Mowers.

Limited Warranty for Commercial Use

Toro Recycler Walk Mowers used for commercial, institutional, or rental use are warranted for 45 days against defects in materials or workmanship. Components failing due to normal wear are not covered by this warranty. The Toro Starting Guarantee does not apply when the product is used commercially.

Items and Conditions Not Covered

There is no other express warranty. This express warranty does not cover the following:

- Cost of regular maintenance service or parts, such as filters, fuel, lubricants, oil changes, spark plugs, air filter, blade sharpening, worn blade, cable/linkage adjustments, or brake and clutch adjustments
- Any product or part which has been altered or misused or required replacement or repair due to accidents or lack of proper maintenance
- Repairs necessary due to improper battery care, electrical supply irregularities, or failure to properly prepare the mower prior to any period of non-use over three months
- Pickup and delivery charges
- Operational misuse, neglect, or accidents
- Repairs or attempted repairs by anyone other than a Toro Service outlet
- Repairs or adjustments to correct starting difficulties due to the following:
  - failure to follow proper maintenance procedures
  - rotary mower blade striking an object
  - contaminants in the fuel system
  - improper fuel or fuel/oil mixture (consult your Operator's Manual if in doubt)
  - failure to drain the fuel system prior to any period of non-use over three months
- Special operational conditions where starting may require more than two pulls:
  - first time starts after extended period of non-use over three months or seasonal storage
  - cool temperature starts such as those found in early spring and late autumn
  - improper starting procedures

If you are having difficulty starting your unit, please check the Operator's Manual to ensure that you are using the correct starting procedures. This can save an unnecessary visit to a Service Dealer.

Owner Responsibilities

You must maintain your Toro Product by following the maintenance procedures described in the Operator's Manual. Such routine maintenance, whether performed by a dealer or by you, is at your expense.

Instructions for Obtaining Warranty Service

If you think that your Toro Product contains a defect in materials or workmanship, or if a normal, able-bodied adult can no longer start your product's engine in one or two pulls, follow this procedure:

1. Contact any Toro Authorized or Master Service Dealer to arrange service at their dealership. To locate a dealer convenient to you, refer to the Yellow Pages of your telephone directory (look under "Lawn Mowers") or access our website at www.Toro.com. U.S. Customers may also call 800-421-9684 to use our 24-hour Toro dealer locator system.
2. Bring the product and your proof of purchase (sales receipt) to the Service Dealer.
3. If for any reason you are dissatisfied with the Service Dealer's analysis or with the assistance provided, contact us at: Customer Care Department, Consumer Division, Toro Warranty Company, 8111 Lyndale Avenue South, Bloomington, MN 55420-1196; or call us toll free at 866-214-9807 (U.S. customers) or 866-214-9808 (Canada customers).

General Conditions

All repairs covered by these warranties must be performed by an Authorized or Master Toro Service Dealer using Toro approved replacement parts. Repair by a Toro Service Dealer is your sole remedy under these warranties.

Neither The Toro Company nor Toro Warranty Company is liable for indirect, incidental, or consequential damages in connection with the use of the Toro Products covered by these warranties, including any cost or expense of providing substitute equipment or service during reasonable periods of malfunction or non-use pending completion of repairs under these warranties.

Some states do not allow exclusions of incidental or consequential damages, or limitations on how long an implied warranty lasts, so the above exclusions and limitations may not apply to you.

Countries Other than the United States or Canada

Customers who have purchased Toro products exported from the United States or Canada should contact their Toro Distributor (Dealer) to obtain guarantee policies for your country, province, or state. If for any reason you are dissatisfied with your Distributor's service or have difficulty obtaining guarantee information, contact the Toro importer. If all other remedies fail, you may contact us at Toro Warranty Company.

Part No. 374–0052 Rev. –

* Residential purposes means use of the product on the same lot as your home. Use at more than one location is considered commercial use, and the commercial use warranty would apply.