Form No. 3421-469 Rev B

Groomer Pull Link Kit

for Serial Number 401500000 and After Greensmaster® 3120 or Greensmaster® 3150 Traction Unit

Model No. 138-4976

Installation Instructions

Determine the left and right sides of the machine from the normal operating position.

Important: **Roller shaft part number 136-8440 must be installed with this kit. Contact your authorized Toro distributor for this roller shaft.**

Ensure that the roller shaft has coarse threads. If it does not, contact your authorized Toro distributor.

1. Park the machine on a level surface, lower the cutting units, shut off the engine, engage the parking brake, remove the ignition key, and disconnect the spark plug.
2. Remove the roller, spring washers, pull link assemblies, flat washers, lockwashers, and grease screws from the pull frame (Figure 1).

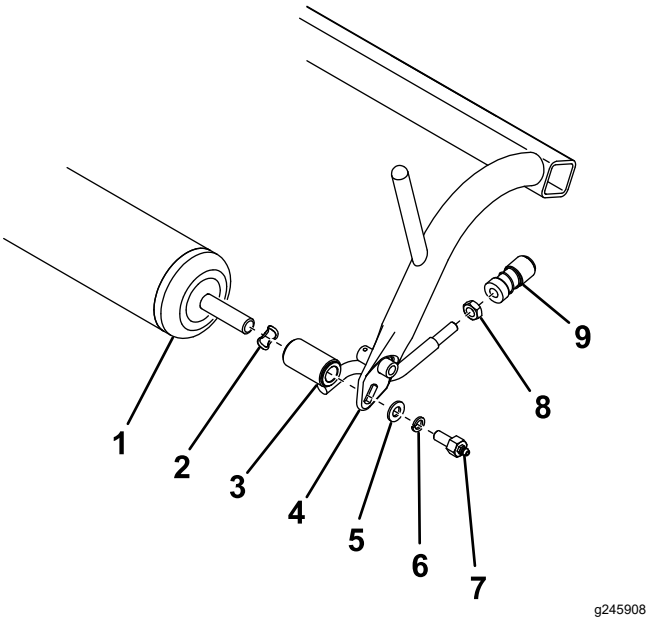

Figure 1

1. Roller
2. Spring washer
3. Pull link assembly
4. Pull frame
5. Flat washer
6. Lock washer
7. Grease screw
8. Jam nut
9. Ball joint receiver

3. Remove and retain the ball joint receivers from the pull link assemblies (Figure 1). Discard all of the previously removed hardware except the roller and ball joint receivers.
4. If the pull frame does not have 2 holes in the underside, drill them at the location shown in Figure 2 using a 0.221 inch drill bit.

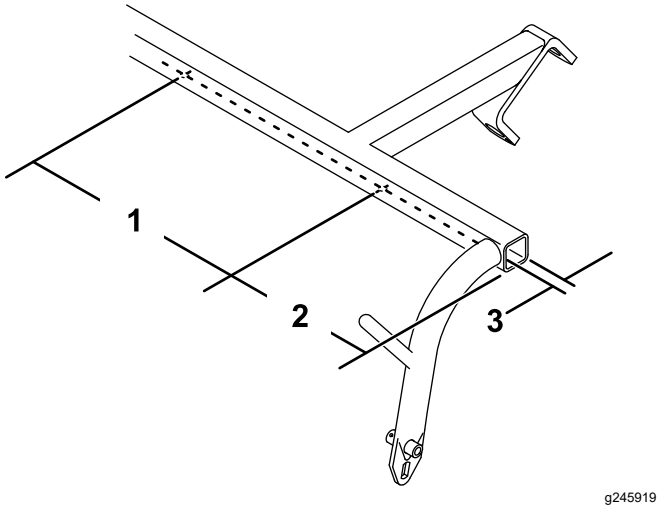

Figure 2

1. 49.4 cm (19-7/16 inches)
2. 8.8 cm (3-1/2 inches)
3. 1.9 cm (3/4 inch)

5. Secure 2 bumpers to the underside of the pull frame using 2 self tapping screws (Figure 3).

© 2026—The Toro® Company
8111 Lyndale Avenue South
Bloomington, MN 55420

Register at www.Toro.com.

Original Instructions (EN)
Printed in the USA
All Rights Reserved

3421-469

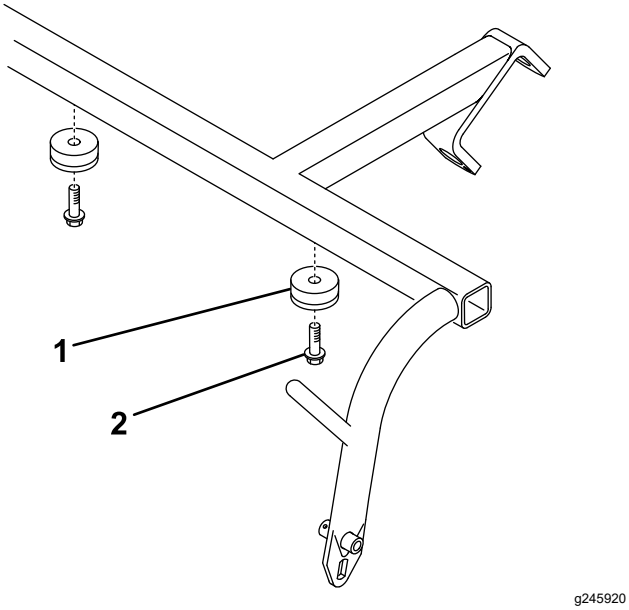

Figure 3

1. Bumper
2. Self tapping screw

6. Slide a frame spacer onto each end of the roller (Figure 4).

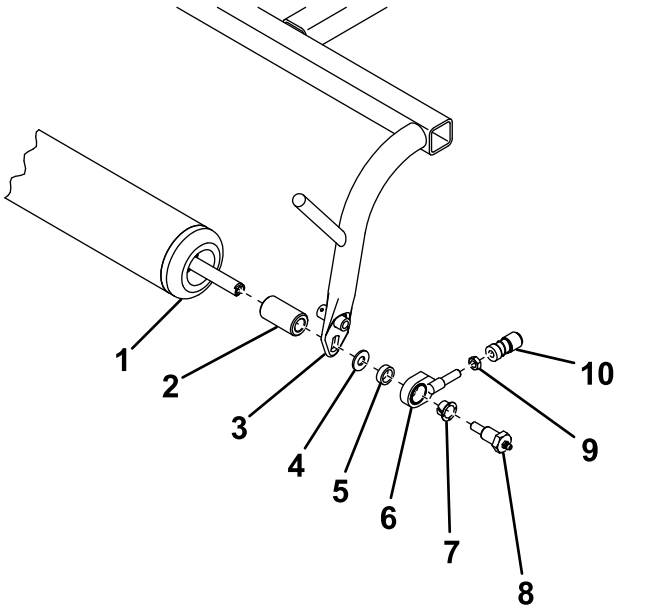

Figure 4

1. Roller
2. Frame spacer
3. Pull frame
4. Flat washer
5. Pull link spacer
6. Pull link assembly
7. Flange bushing
8. Grease screw
9. Jam nut
10. Ball joint receiver

7. Secure the roller to the pull frame as shown in Figure 4.
8. Thread a jam nut and the previously removed ball joint receiver onto the pull link assembly (Figure 4). Do not tighten the jam nut at this time.
9. Adjust the ball joint receiver so that the distance between the grease screw and the opening in the ball joint receiver is 9.1 cm (3.6 inches) and tighten the jam nut to secure it in place (Figure 5).

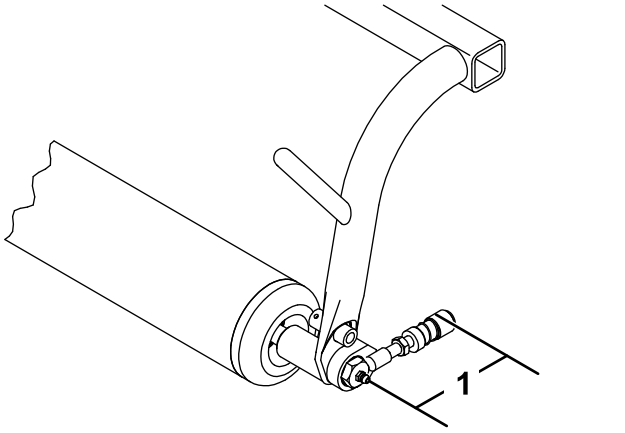

Figure 5

1. 9.1 cm (3.6 inches)

10. Thread a ball stud onto each end of the groomer front rollers (Figure 6).

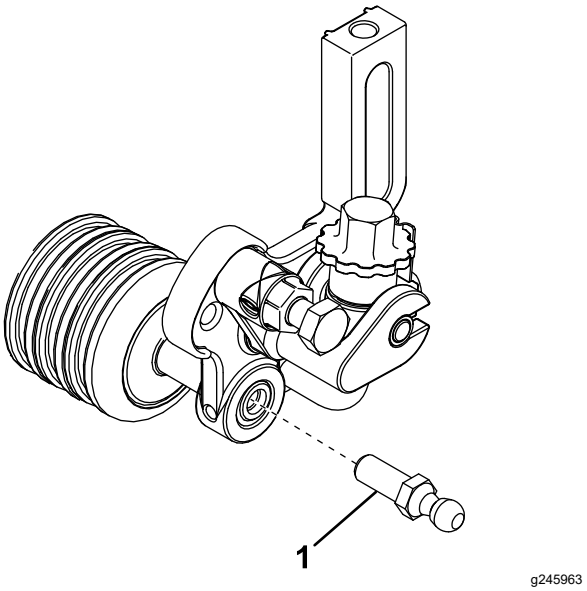

Figure 6

1. Ball stud

11. Slide the sleeve on the ball joint receivers back and hook them onto the groomer ball studs.