FORM NO. 3312-587

TORO®

MODEL NO. 20680-5000001 & UP

PARTS CATALOG

# 21" S.P. REAR BAGGER

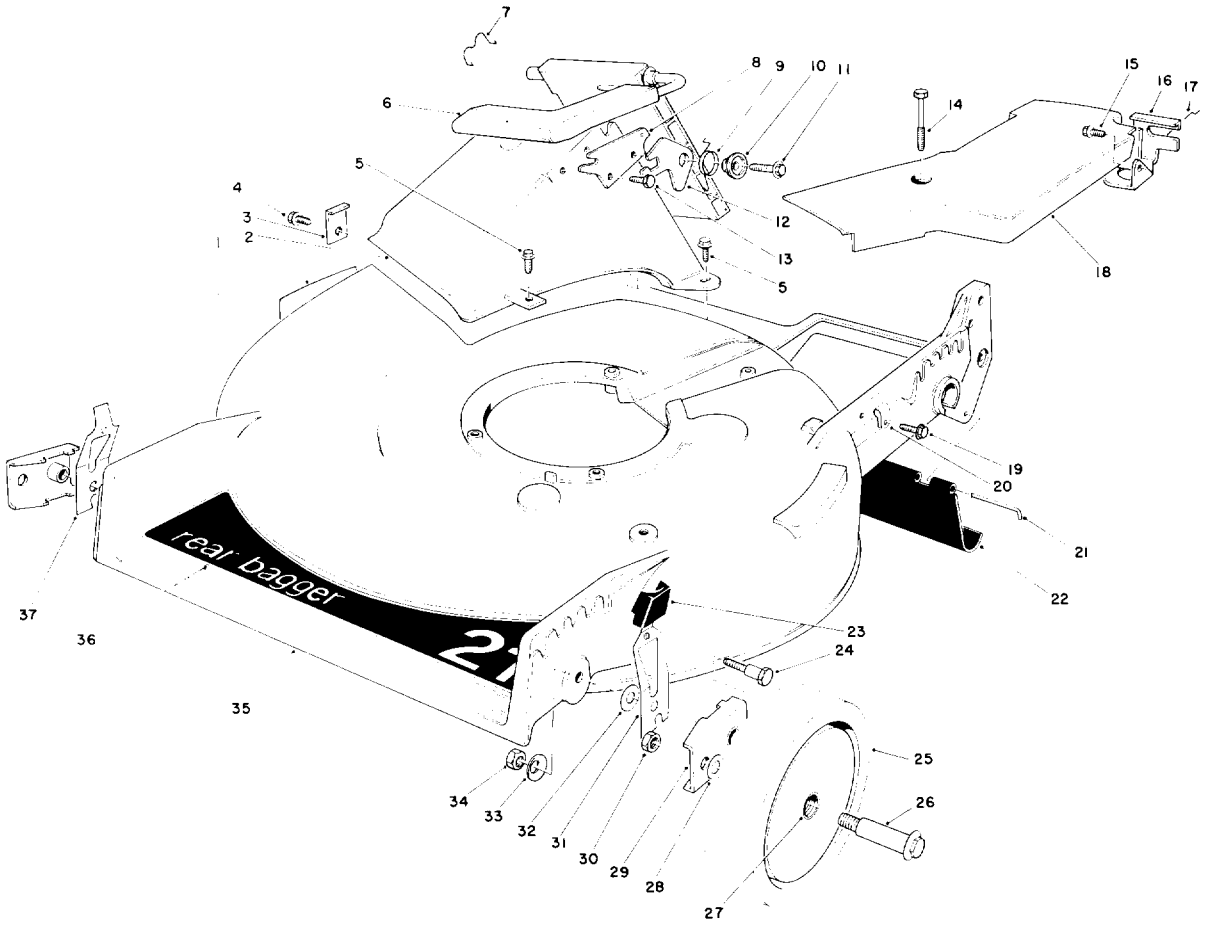


## HOUSING ASSEMBLY

| Ref. No. | Part No. | Description | No. Used |
|---|---|---|---|
| 1 | 39-5770 | Decal — Danger | 1 |
| 2 | 46-3500 | Tunnel — Discharge | 1 |
| 3 | 47-6540 | Clip — Tunnel | 1 |
| 4 | 12-3270 | Screw — Thread Forming Hex Washer Hd. | 1 |
| 5 | 46-6811 | Screw — Thread Forming Hex Washer Hd. | 3 |
| 6 | 51-0200 | Discharge Door Assembly | 1 |
| 7 | 47-5840 | Door — Retainer | 1 |
| 8 | 23-1040 | Plate — Latch | 1 |
| 9 | 33-4860 | Spring — Torsion | 1 |
| 10 | 43-4840 | Spacer — Latch | 1 |
| 11 | 46-8091 | Screw — Self Tapping Hex Washer Hd. | 1 |
| 12 | 42-4010 | Latch — Safety | 1 |

| Ref. No. | Part No. | Description | No. Used |
|---|---|---|---|
| 13 | 46-8090 | Screw — Self Tapping Hex Washer Hd. | 1 |
| 14 | 37-7260 | Capscrew — Special | 2 |
| 15 | 32144-11 | Screw — Thread Forming Hex Washer Hd. | 1 |
| 16 | 46-5870 | Bracket — Traction Adj. | 1 |
| 17 | 46-7030 | Retainer — Cable | 1 |
| 18 | 52-7390 | Cover — Belt | 1 |
| 19 | 12-5450 | Screw — Thread Forming Hex Washer Hd. | 1 |
| 20 | 2412-83 | Cable Clamp | 1 |
| 21 | 33-3208 | Rod — Shield | 1 |
| 22 | 44-0580 | Shield — Trailing | 1 |
| 23 | 25-7740 | Knob Arm | 2 |
| 24 | 44-5270 | Screw — Pivot | 2 |

PRICE $1.00

© The Toro Company — 1985

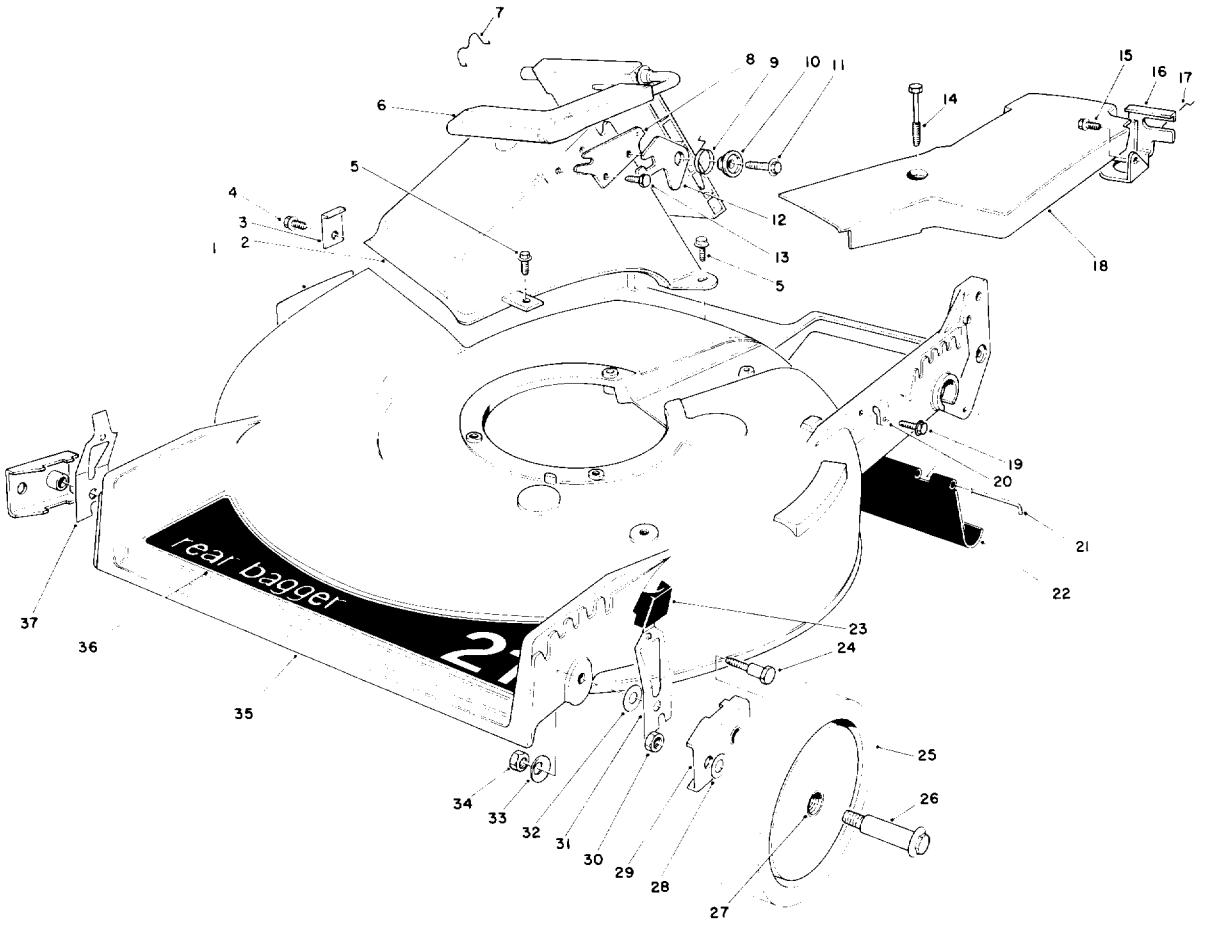


# HOUSING ASSEMBLY (Continued)

| Ref. No. | Part No. | Description | No. Used |
|---|---|---|---|
| 25 | 11-9509 | Wheel & Tire Assembly (Incl. Ref. #27) | 2 |
| 26 | 27-6231 | Wheel Bolt | 2 |
| 27 | 27-6250 | Bushing — Wheel | 4 |
| 28 | 40-1940 | Washer — Wheel Bolt | 2 |
| 29 | 47-2940 | Pivot Arm Assembly | 2 |
| 30 | 3296-6 | Nut — Lock | 2 |

| Ref. No. | Part No. | Description | No. Used |
|---|---|---|---|
| 31 | 52-7480 | Spring Arm Assembly (L.H.) | 1 |
| 32 | 5-4460 | Washer — Pivot | 2 |
| 33 | 3290-456 | Washer — Bellville | 2 |
| 34 | 3296-29 | Nut — Lock | 2 |
| 35 | 11-4089 | Housing (Incl. Ref. #1) | 1 |
| 36 | 44-0450 | Decal — 21" Rear Bagger | 1 |
| 37 | 52-7490 | Spring Arm Assembly (R.H.) | 1 |

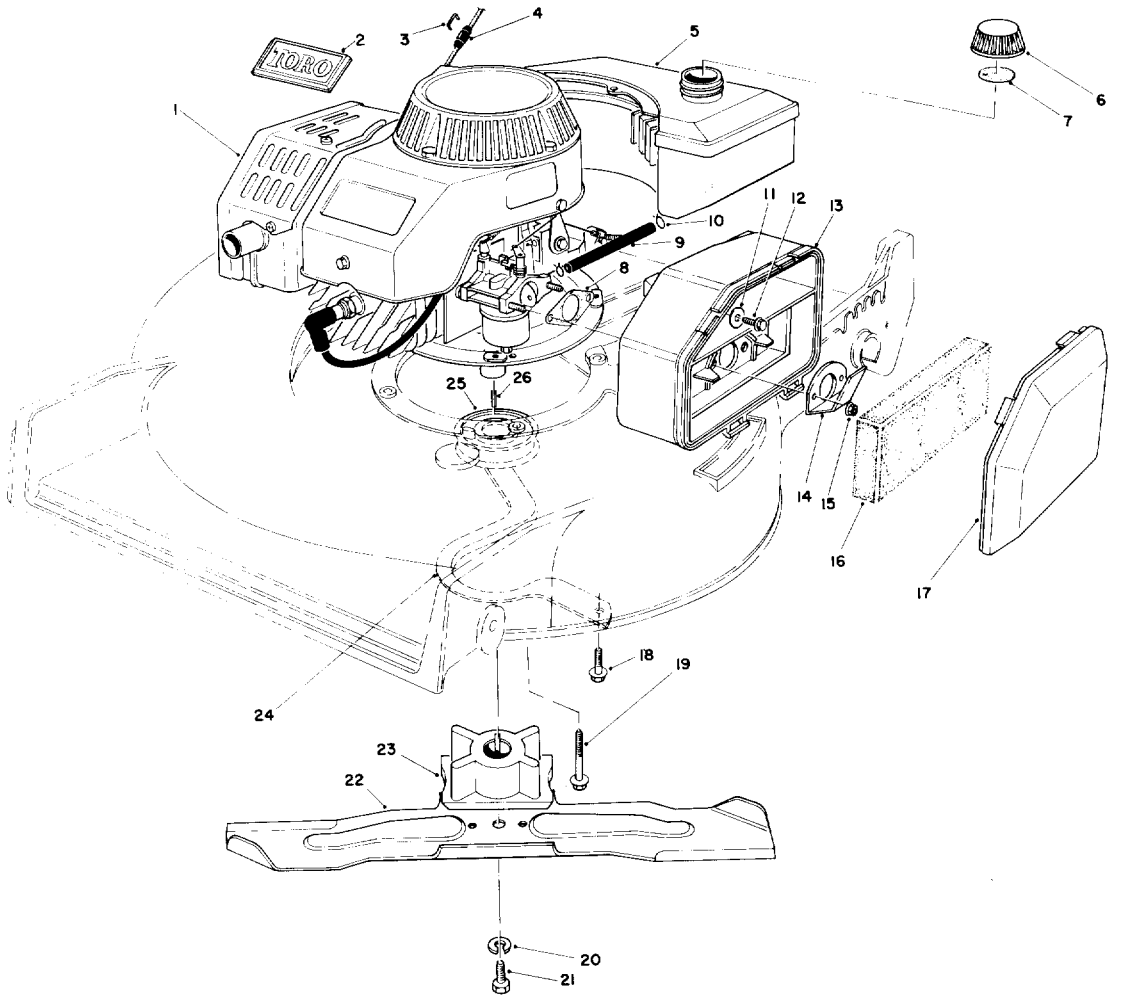


# ENGINE ASSEMBLY

| Ref. No. | Part No. | Description | No. Used |
|---|---|---|---|
| 1 | 59257 | Engine (Complete) | 1 |
| 2 | 46-8290 | Plate — Toro Logo | 1 |
| 3* | | Staple | 1 |
| 4 | 47-2480 | Stop — Rope | 1 |
| 5 | 81-0040 | Fuel Tank Assembly | 1 |
| 6 | 42-0681 | Gas Cap Assembly (Incl. Ref. #7) | 1 |
| 7 | 20-4620 | Gasket — Gas Cap | 1 |
| 8 | 81-0090 | Gasket — Air Cleaner | 1 |
| 9 | 81-2310 | Fuel Line | 1 |
| 10 | 2412-80 | Clamp — Fuel Line | 2 |
| 11 | 3256-16 | Washer — Flat | 1 |
| 12 | 51-2690 | Screw — Cap Hex Washer Hd | 1 |
| 13 | 81-0110 | Air Cleaner | 1 |

| Ref. No. | Part No. | Description | No. Used |
|---|---|---|---|
| 14 | 81-0140 | Deflector | 1 |
| 15 | 49-7810 | Nut — Lock | 2 |
| 16 | 81-0100 | Foam Element — Air Cleaner | 1 |
| 17 | 81-0120 | Cover — Air Cleaner | 1 |
| 18 | 11-9760 | Screw — Thread Forming Hex Washer Hd. | 2 |
| 19 | 3234-11 | Screw — Hex Flange | 4 |
| 20 | 3253-22 | Washer — Lock | 1 |
| 21 | 26-0670 | Screw — Blade | 1 |
| 22 | 42-1000 | Blade 21" | 1 |
| 23 | 46-7810 | Retainer — Blade | 1 |
| 24 | 40-5720 | Guide — Belt | 1 |
| 25 | 46-7910 | Pulley — Driver | 1 |
| 26 | 7-0036 | Key — Square | 1 |

*Obtain Locally

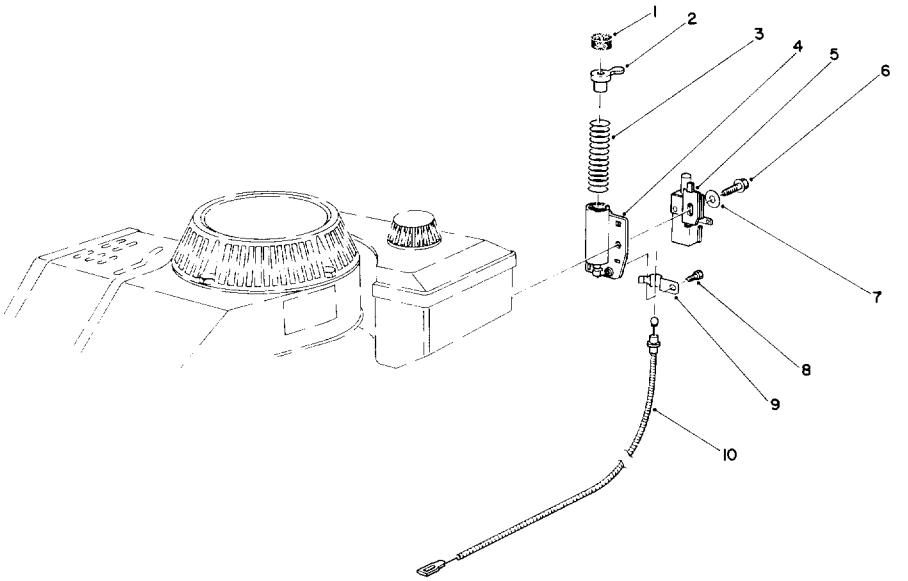


# BRAKE ASSEMBLY

| Ref. No. | Part No. | Description | No. Used |
|---|---|---|---|
| 1 | | Pad — Friction | 1 |
| 2 | 47-7350 | Plunger Assembly (Incl. Ref. #1) | 1 |
| 3 | 46-9130 | Spring — Compression | 1 |
| 4 | 46-5840 | Tube | 1 |
| 5 | 47-6520 | Switch — Push Button | 1 |

| Ref. No. | Part No. | Description | No. Used |
|---|---|---|---|
| 6 | 46-0790 | Screw — Self Tapping | 1 |
| 7 | 3256-22 | Washer — Plain | 1 |
| 8 | 12-5450 | Screw — Thread Forming Hex Washer Hd. | 1 |
| 9 | 46-6530 | Cable Clamp | 1 |
| 10 | 43-4531 | Cable — Brake | 1 |

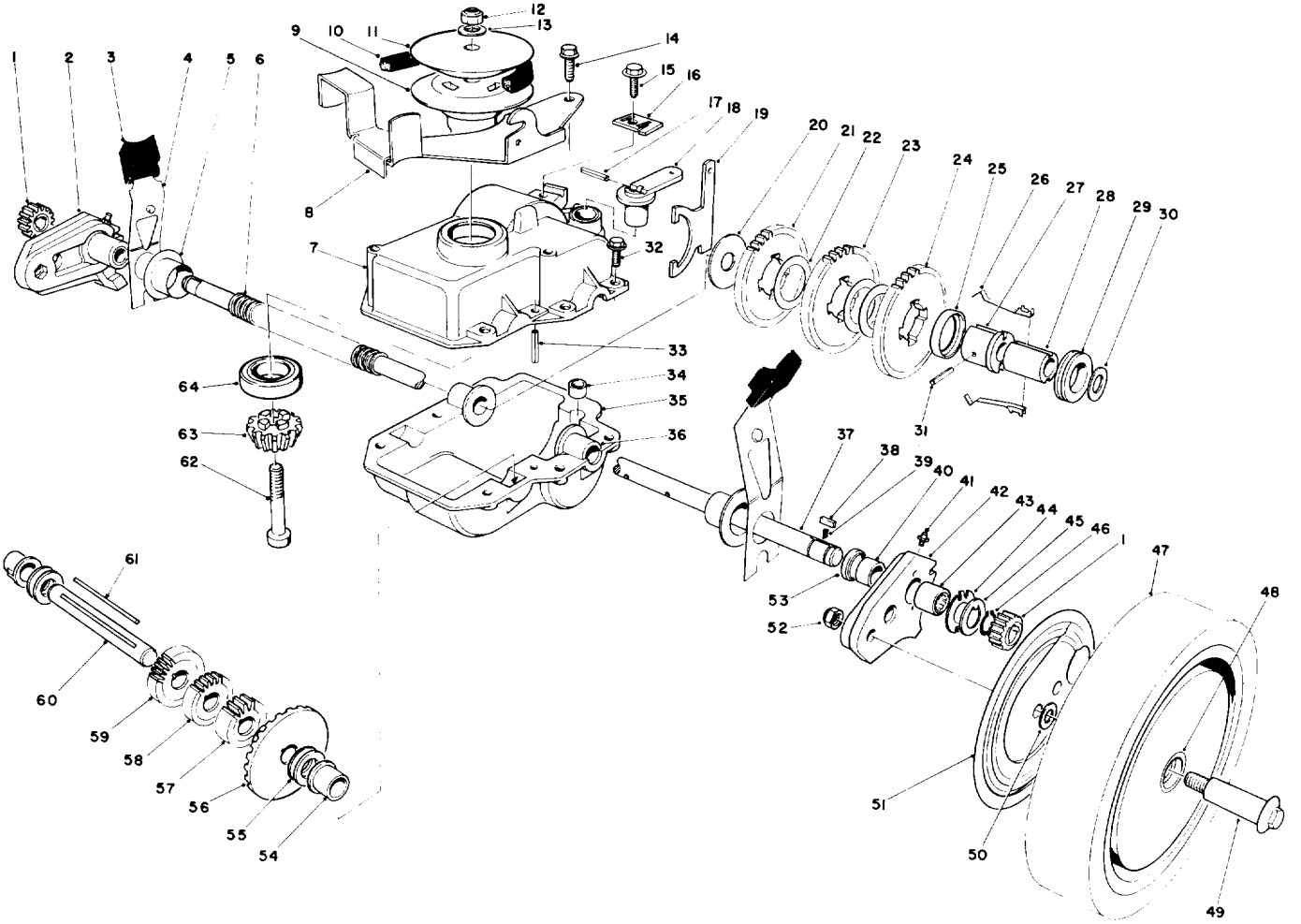

# GEAR CASE ASSEMBLY

| Ref. No. | Part No. | Description | No. Used |
|---|---|---|---|
| 1 | 39-9160 | Pinion | 2 |
| 2 | 49-7720 | Pivot Arm Assembly — R.H. (Incl. Ref. #40, 41, 43 & 53) | 1 |
| 3 | 25-7740 | Knob — Arm | 2 |
| 4 | 44-1010 | Spring Arm Assembly | 2 |
| 5 | 42-3520 | End Cap | 2 |
| 6 | 24-7922 | Cover — Drive Shaft | 1 |
| 7 | 49-8370 | Case — Upper | 1 |
| 8 | 49-8460 | Bracket — Belt Guide | 1 |
| 9 | 49-8330 | Pulley — Lower | 1 |
| 10 | 36-8070 | V-Belt | 1 |
| 11 | 49-8340 | Pulley — Upper | 1 |
| 12 | 3296-29 | Locknut | 1 |
| 13 | 3256-2 | Washer — Flat | 1 |
| 14 | 12-3270 | Screw — Special | 2 |
| 15 | 32144-11 | Screw — Thread Forming | 1 |
| 16 | 46-5610 | Clamp — Cable | 1 |
| 17 | 32121-99 | Pin — Coil | 1 |
| 18 | 29-9560 | Lever — Shift | 1 |
| 19 | 29-9520 | Yoke — Shift | 1 |
| 20 | 29-9690 | Washer | 1 |
| 21 | 42-4740 | Gear — 38T | 1 |

| Ref. No. | Part No. | Description | No. Used |
|---|---|---|---|
| 22 | 36-4770 | Spacer — Gear | 3 |
| 23 | 29-9271 | Gear — 42T | 1 |
| 24 | 46-3560 | Gear — 52T | 1 |
| 25 | 55-8020 | Retainer — Key | 1 |
| 26 | 29-9330 | Key — Shift | 2 |
| 27 | 55-8010 | Body — Sleeve | 1 |
| 28 | 39-6720 | Sleeve | 1 |
| 29 | 29-9340 | Collar — Shift | 1 |
| 30 | 36-4780 | Washer | 1 |
| 31 | 32121-106 | Pin — Coil | 1 |
| 32 | 49-2040 | Screw — Self Tapping | 6 |
| 33 | 32121-100 | Pin — Coil | 1 |
| 34 | 29-9570 | Bushing — Yoke | 1 |
| 35 | 29-9410 | Case — Lower | 1 |
| 36 | 47-5220 | Bushing — Output Shaft | 2 |
| 37 | 44-0850 | Shaft — Output | 1 |
| 38 | 39-9680 | Key — Rectangular | 2 |
| 39 | 39-9650 | Spring | 2 |
| 40 | 47-2890 | Bushing | 2 |
| 41 | 302-56 | Grease Fitting | 2 |
| 42 | 49-7710 | Pivot Arm Assembly — L.H. (Incl. Ref. #40, 41, 43 & 53) | 1 |

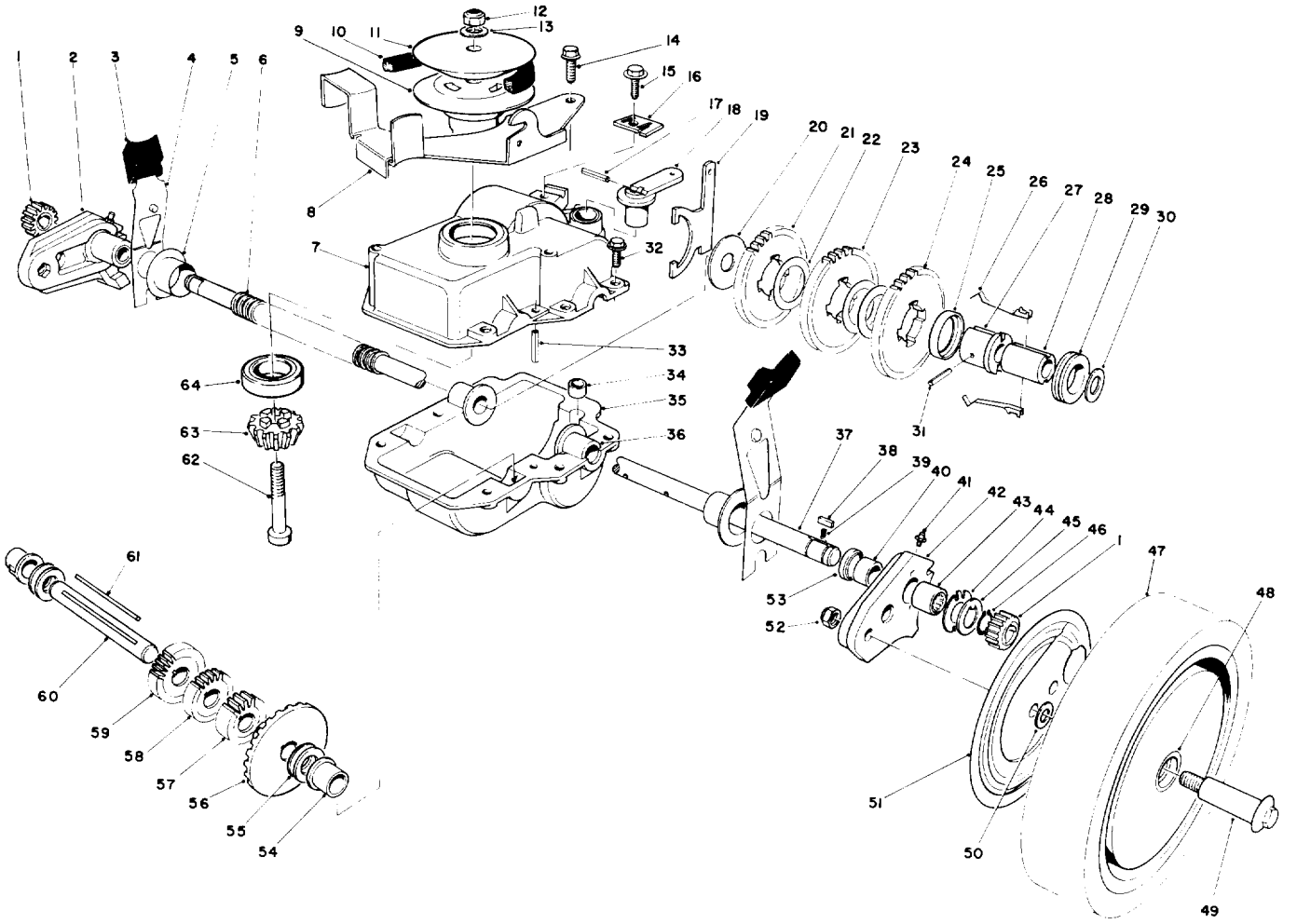

# GEAR CASE ASSEMBLY (Continued)

| Ref. No. | Part No. | Description | No. Used |
|---|---|---|---|
| 43 | 48-2060 | Bearing — Roller | 2 |
| 44 | 49-7690 | Washer — Thrust, Inner | 2 |
| 45 | 49-7700 | Washer — Thrust, Outer | 2 |
| 46 | 32151-68 | Retaining Ring | 4 |
| 47 | 11-9519 | Wheel, Tire & Gear Assembly (Incl. Ref. #48) | 2 |
| 48 | 27-6250 | Bushing — Wheel | 4 |
| 49 | 27-6231 | Bolt — Wheel | 2 |
| 50 | 40-1940 | Washer — Wheel Bolt | 2 |
| 51 | 52-4860 | Cover — Wheel | 2 |
| 52 | 3296-6 | Locknut | 2 |
| 53 | 47-6730 | Bushing — Short Shaft | 2 |

| Ref. No. | Part No. | Description | No. Used |
|---|---|---|---|
| 54 | 52-5410 | Bushing — Short Shaft | 2 |
| 55 | 36-4791 | Washer — Thrust | 4 |
| 56 | 39-6670 | Gear — Bevel | 1 |
| 57 | 46-3540 | Gear — 12T | 1 |
| 58 | 46-3550 | Gear — 14T | 1 |
| 59 | 39-6650 | Gear — 18T | 1 |
| 60 | 46-9470 | Shaft — Intermediate | 1 |
| 61 | 39-7843 | Key — Square | 1 |
| 62 | 3274-61 | Screw — Socket Head | 1 |
| 63 | 49-8350 | Pinion — Bevel | 1 |
| 64 | 38-7820 | Bearing — Ball | 1 |
| * | 49-8610 | Gear Case Complete | 1 |

*Not Illustrated

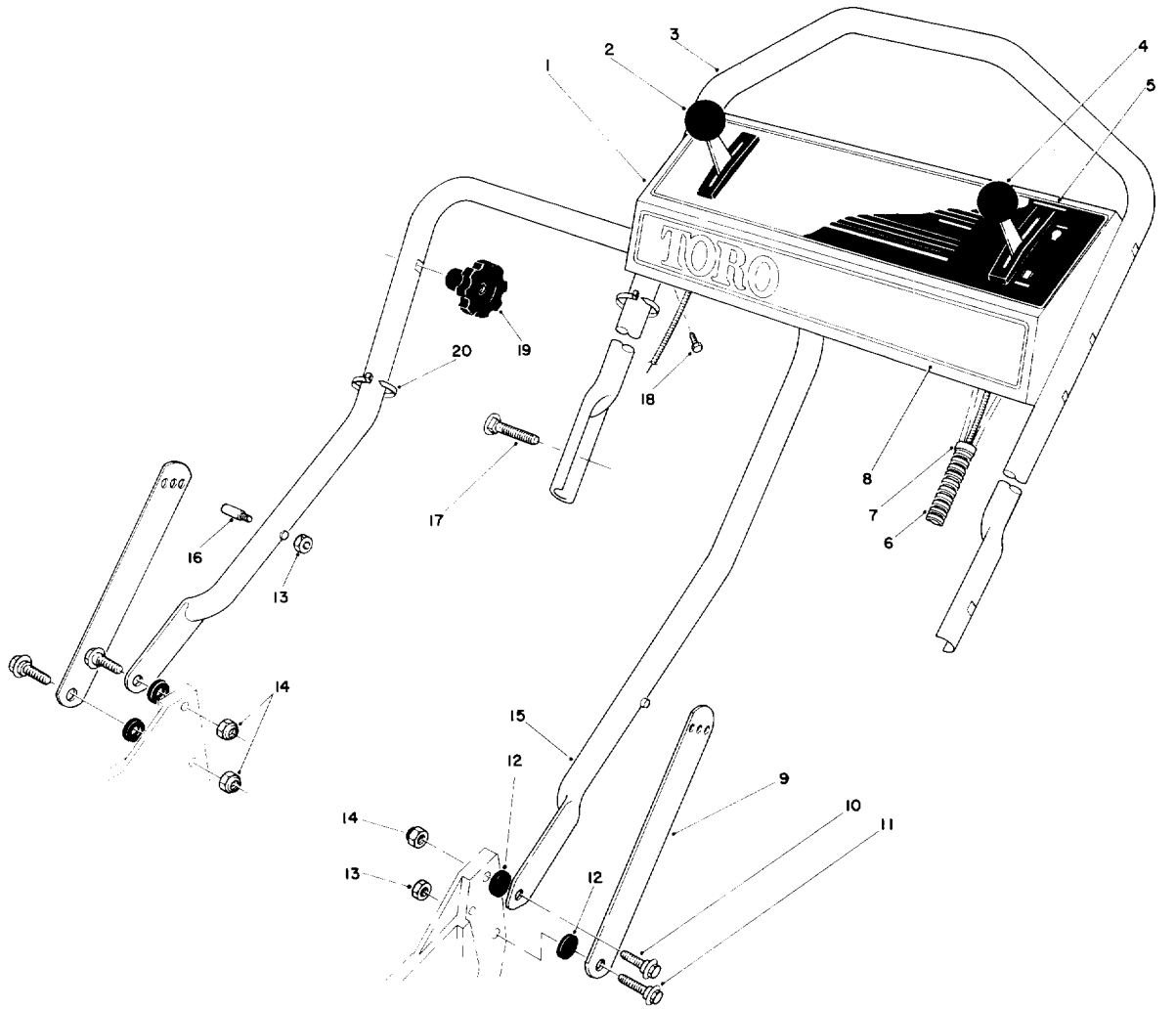


# HANDLE ASSEMBLY

| Ref. No. | Part No. | Description | No. Used |
|---|---|---|---|
| 1 | 11-6759 | Panel — Control (Incl. Ref. #5) | 1 |
| 2 | 46-5430 | Control — Ground Speed (Bend Type #1) (Sheath Lg. 42¼ inch) (Wire Lg. 2¼ inch) | 1 |
| 3 | 46-5411 | Handle — Upper | 1 |
| 4 | 49-4193 | Control — Throttle (Bend Type #2) (Sheath Lg. 54¼ inch) (Wire Lg. 2⅜ inch) | 1 |
| 5 | 49-7780 | Decal — Instruction Panel | 1 |
| 6 | 46-6440 | Cover Control Cables | 1 |
| 7 | 2412-50 | Clip — Convoluted Tubing | 4 |

| Ref. No. | Part No. | Description | No. Used |
|---|---|---|---|
| 8 | 46-7380 | Decal — Toro Panel | 1 |
| 9 | 43-1370 | Latch — Handle | 2 |
| 10 | 27-7211 | Screw — Shoulder | 2 |
| 11 | 27-7210 | Screw — Shoulder | 2 |
| 12 | 3-3287 | Spacer — Handle Latch | 4 |
| 13 | 3296-47 | Nut — Lock | 3 |
| 14 | 3296-29 | Nut — Lock | 3 |
| 15 | 43-1360 | Lower Handle Assembly | 1 |
| 16† | 49-2750 | Pin — Handle | 2 |
| 17 | 17-9421 | Screw — Handle | 2 |
| 18 | 32104-76 | Screw — Self Tap Slotted | 5 |
| 19 | 19-4050 | Knob — Handle Release | 2 |
| 20 | 3290-378 | Cable Tie | 2 |

† Service Replacement Parts

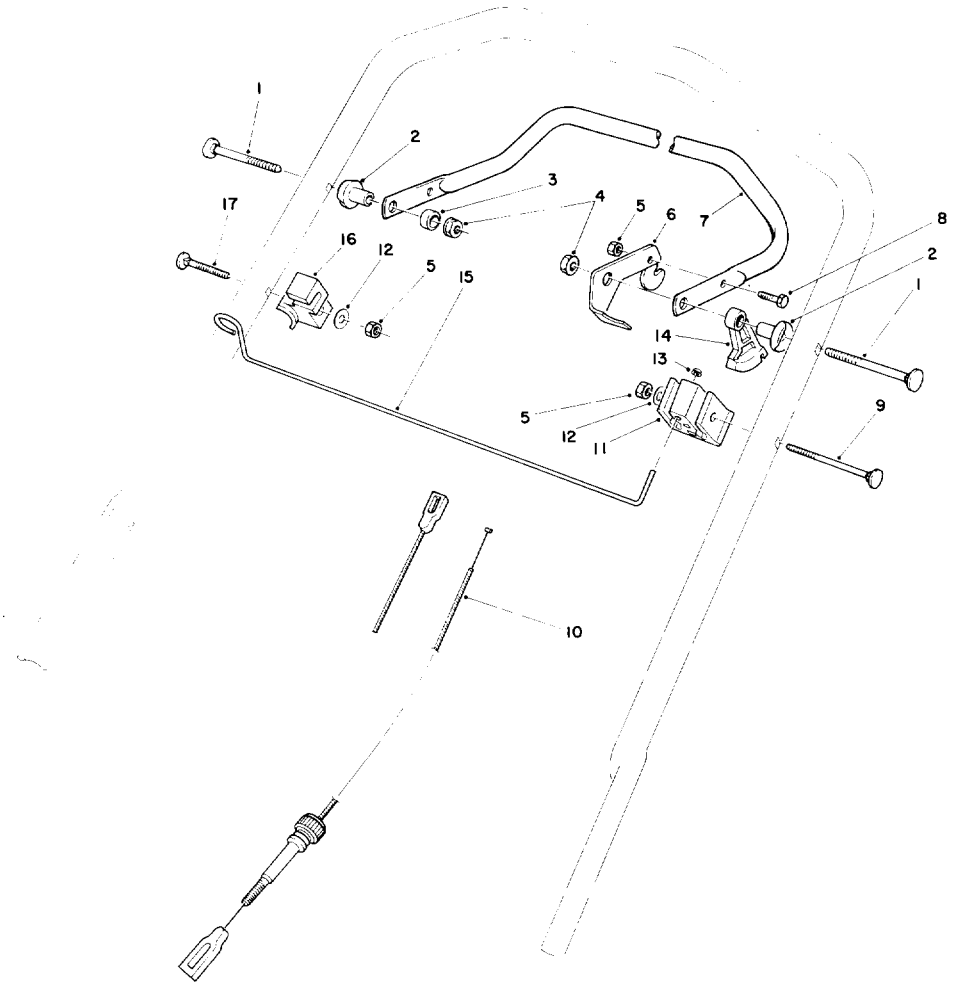


# TRACTION CONTROL ASSEMBLY

| Ref. No. | Part No. | Description | No. Used |
|---|---|---|---|
| 1 | 17-9421 | Screw — Handle | 2 |
| 2 | 49-1630 | Support — Spacer | 2 |
| 3 | 256-276 | Spacer — Nylon | 1 |
| 4 | 3296-58 | Nut — Flange Lock | 2 |
| 5 | 3296-42 | Nut — Lock | 3 |
| 6 | 46-7950 | Lever — Control | 1 |
| 7 | 52-7430 | Control Bar Assembly | 1 |
| 8 | 321-3 | Screw — Cap Hex Hd. | 1 |
| 9 | 46-6434 | Screw — Handle | 1 |

| Ref. No. | Part No. | Description | No. Used |
|---|---|---|---|
| 10 | 46-5481 | Cable — Traction | 1 |
| 11 | 46-6980 | Support Cable | 1 |
| 12 | 3256-22 | Washer — Plain | 2 |
| 13 | 3290-337 | Push Nut | 1 |
| 14 | 46-5520 | Lever Traction | 1 |
| 15 | 46-7970 | Rod — Rope | 1 |
| 16 | 46-7960 | Catch — Rod | 1 |
| 17 | 46-6430 | Screw — Handle | 1 |

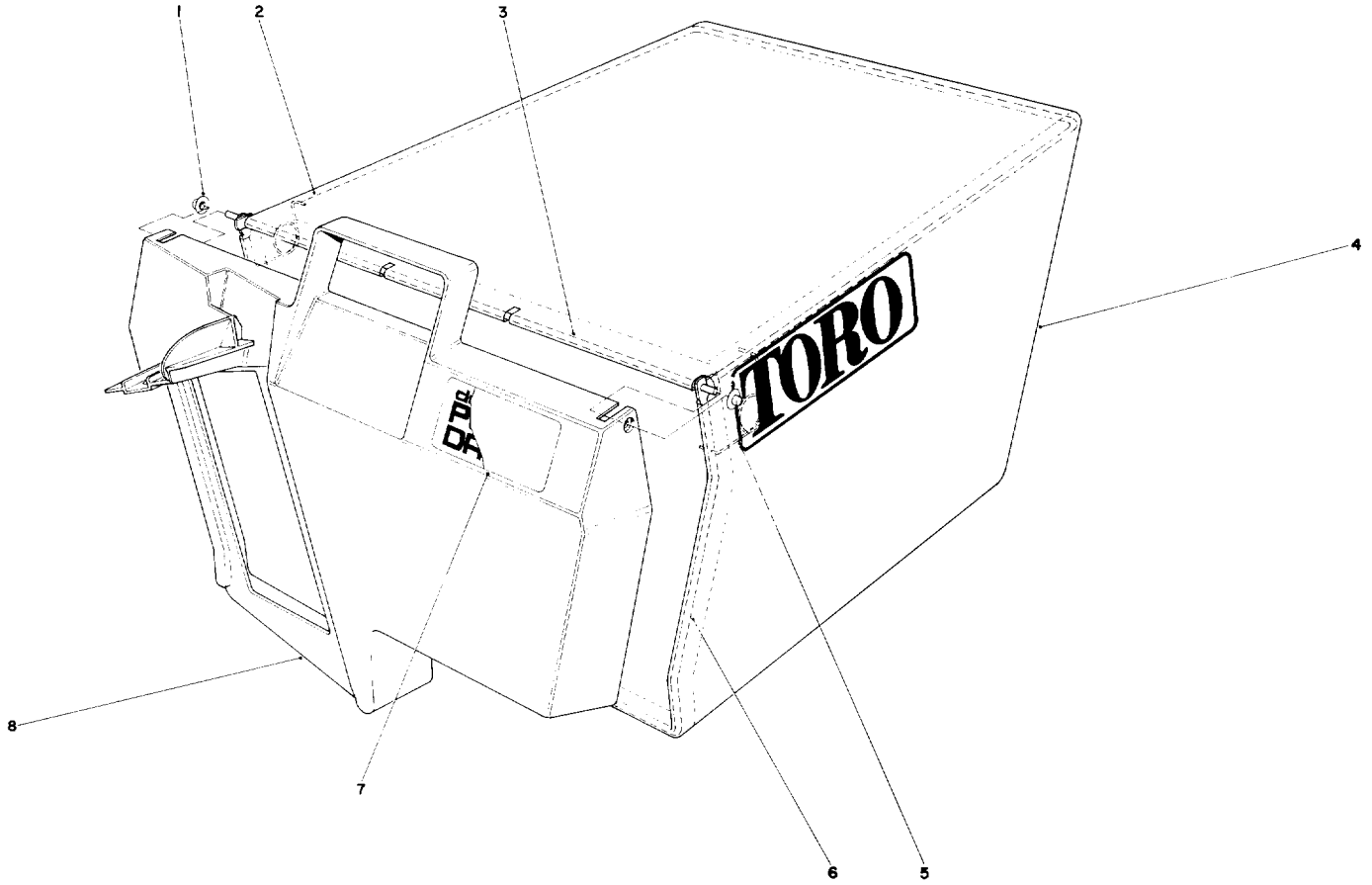


# GRASS BAG ASSEMBLY NO. 11-0189

| Ref. No. | Part No. | Description | No. Used |
|---|---|---|---|
| 1 | 3290-422 | Nut — Push | 2 |
| 2 | 42-4030 | Bag Frame — Upper | 1 |
| 3 | 33-4820 | Hinge — Bag Door | 1 |
| 4 | 8-2759 | Grass Bag | 1 |

| Ref. No. | Part No. | Description | No. Used |
|---|---|---|---|
| 5 | 36-6910 | Spring | 2 |
| 6 | 42-4020 | Frame — Bag | 1 |
| 7 | 40-2240 | Decal — Bag Door | 1 |
| 8 | 37-1392 | Door — Grass Bag | 1 |

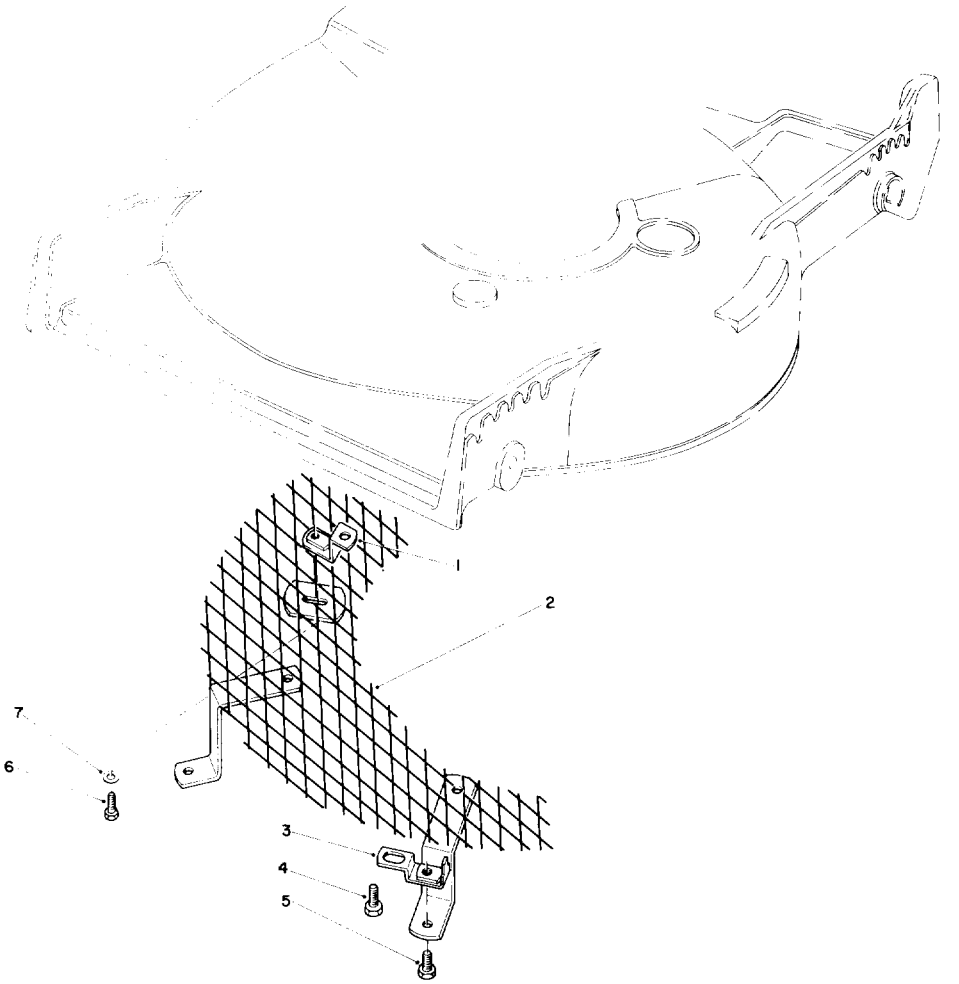


# LEAF SHREDDER KIT MODEL NO. 59157 (Optional)

| Ref. No. | Part No. | Description | No. Used |
|---|---|---|---|
| 1 | 47-6260 | Bracket | 1 |
| 2 | 47-6230 | Screen | 1 |
| 3 | 46-4880 | Mounting Bracket | 2 |
| 4 | 32144-11 | Screw — Self Tapping | 3 |

| Ref. No. | Part No. | Description | Ref. No. |
|---|---|---|---|
| 5 | 321-3 | Capscrew, Hex Hd. | 2 |
| 6 | 321-5 | Capscrew, Hex Hd. | 1 |
| 7 | 3256-1 | Washer | 1 |

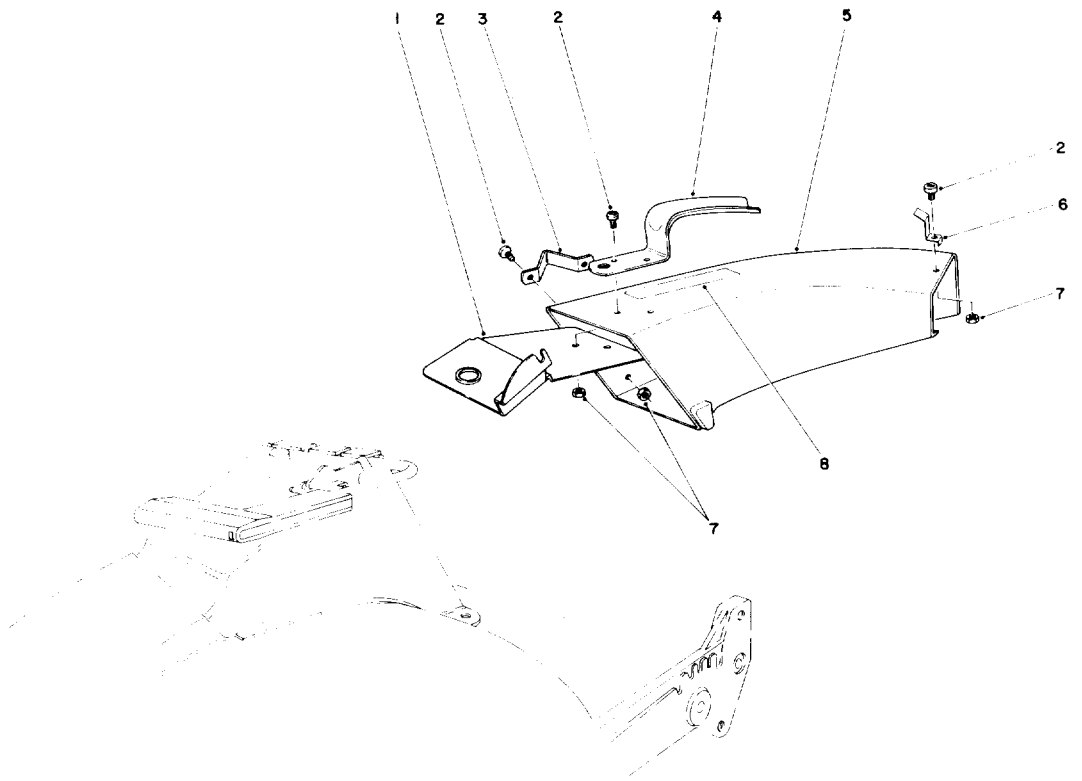


# SIDE DISCHARGE CHUTE MODEL NO. 59108 (Optional)

| Ref. No. | Part No. | Description | No. Used |
|---|---|---|---|
| 1 | 44-2330 | Plate — Discharge Chute | 1 |
| 2 | 3251-3 | Screw | 5 |
| 3 | 46-6580 | Bracket — Side | 1 |
| 4 | 42-1340 | Handle — Grass Chute | 1 |
| 5 | 11-7149 | Chute — Discharge (Incl. Ref. #8) | 1 |

| Ref. No. | Part No. | Description | No. Used |
|---|---|---|---|
| 6 | 49-2630 | Clip — Cable Stop | 1 |
| 7 | 3296-12 | Locknut | 5 |
| 8 | 39-9120 | Decal — Caution | 1 |

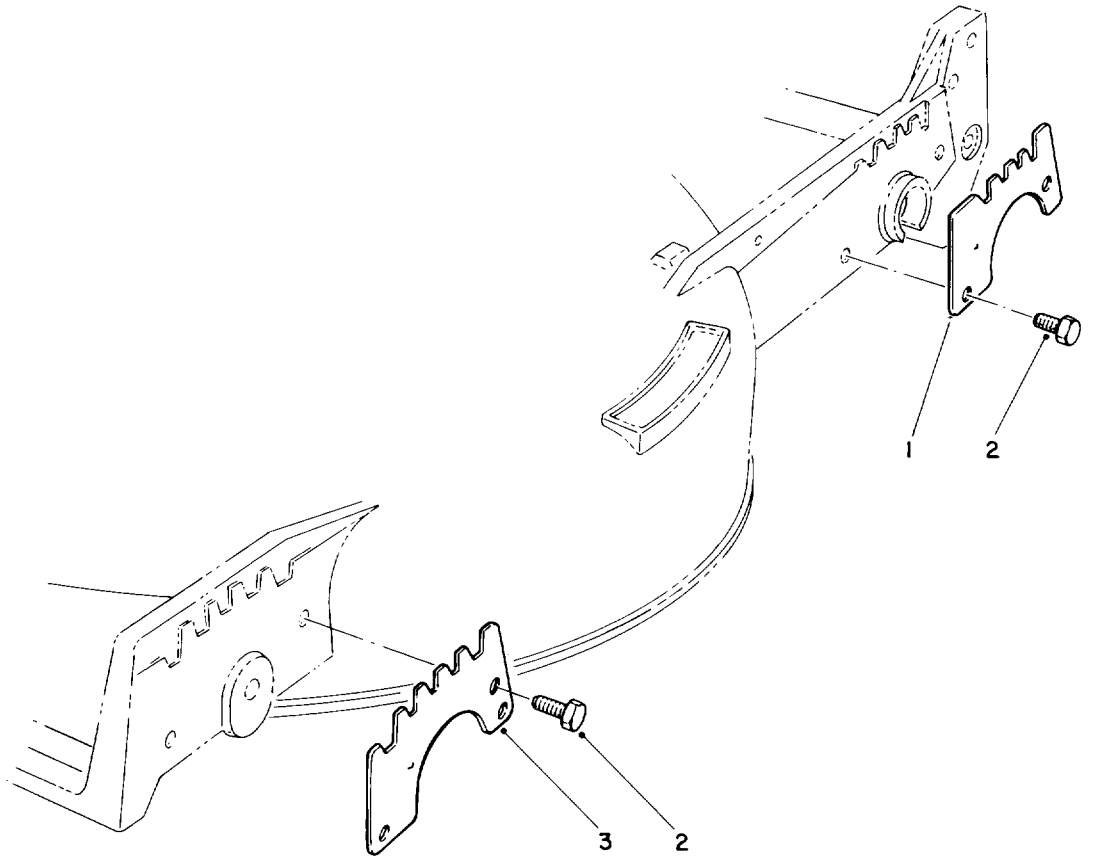


# WEAR PLATE KIT NO. 49-4080 (Optional)

| Ref. No. | Part No. | Description | No. Used |
|---|---|---|---|
| 1 | 49-4070 | Plate — Wear, Rear | 2 |
| 2 | 32104-17 | Screw — Thread Forming | 8 |

| Ref. No. | Part No. | Description | No. Used |
|---|---|---|---|
| 3 | 43-5050 | Plate — Wear, Front | 2 |

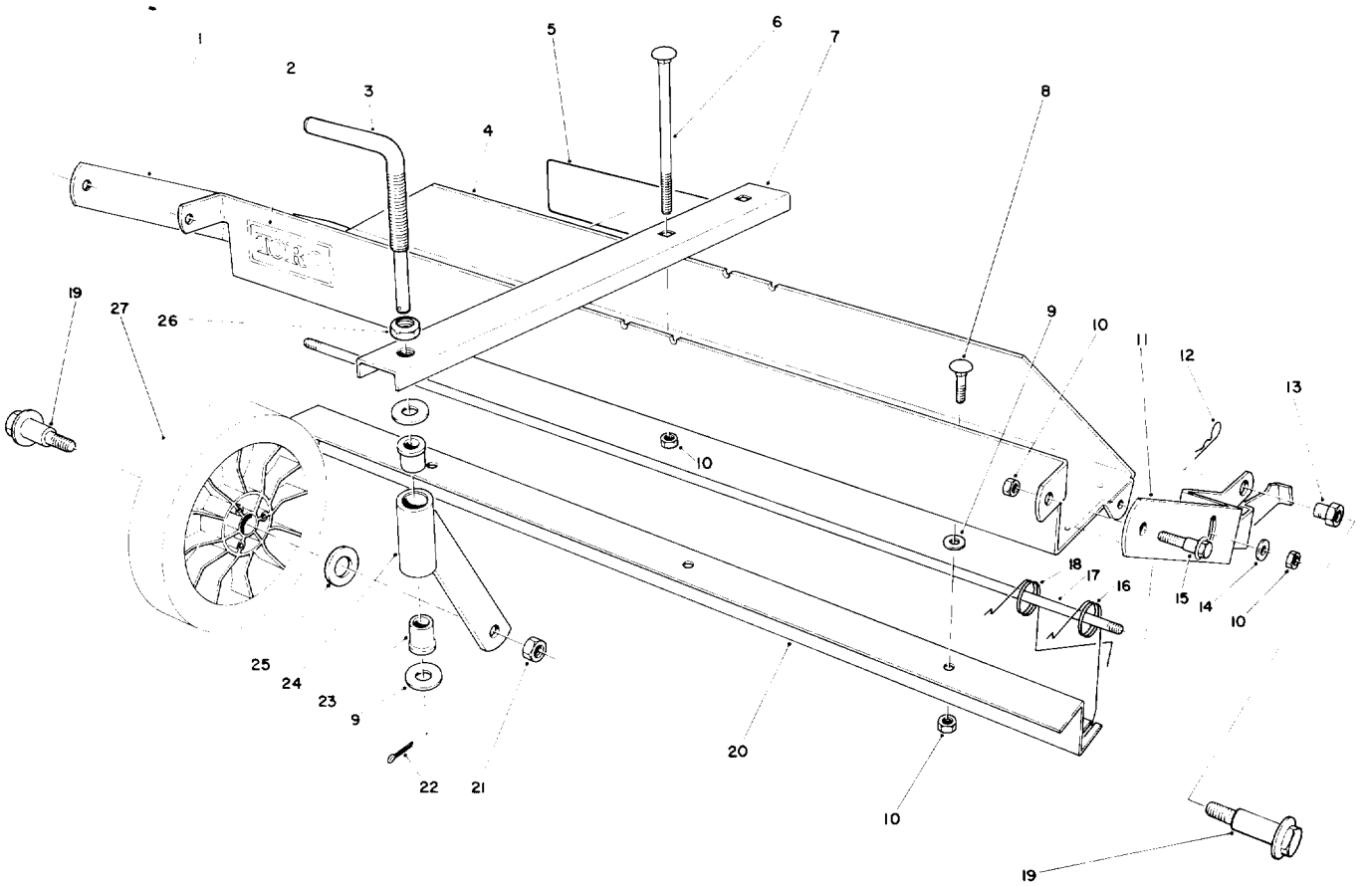

# DETHATCHER KIT MODEL NO. 59126 (Optional)

| Ref. No. | Part No. | Description | No. Used |
|---|---|---|---|
| 1 | 47-6030 | Frame Mount — R.H. | 1 |
| 2 | 44-0810 | Decal — Toro | 1 |
| 3 | 47-6120 | Rod — Castor Adjust | 1 |
| 4 | 47-2390 | Frame — Main (Incl. Ref. #2) | 1 |
| 5 | 47-7500 | Decal — Instruction | 1 |
| 6 | 3230-13 | Carriage Bolt | 2 |
| 7 | 47-6090 | Castor Frame | 1 |
| 8 | 3230-1 | Carriage Bolt | 3 |
| 9 | 3256-23 | Washer | 5 |
| 10 | 32153-3 | Locknut | 9 |
| 11 | 47-6020 | Frame Mount — L.H. | 1 |
| 12 | 3290-255 | Hairpin Cotter | 2 |
| 13 | 47-6130 | Pivot Nut | 2 |
| 14 | 3256-24 | Washer — Plain | 2 |

| Ref. No. | Part No. | Description | No. Used |
|---|---|---|---|
| 15 | 37-8771 | Screw — Shoulder | 2 |
| 16 | 47-6040 | Spring — Dethatcher | 6 |
| 17 | 47-6050 | Rod — Spring Support | 1 |
| 18 | 47-6041 | Spring — Dethatcher | 6 |
| 19 | 27-6230 | Wheel Bolt | 3 |
| 20 | 47-6010 | Strap — Spring Guide | 1 |
| 21 | 3296-6 | Locknut | 1 |
| 22 | 3272-10 | Cotter Pin | 1 |
| 23 | 47-6110 | Bushing — Flange | 2 |
| 24 | 47-6060 | Castor Tube & Support | 1 |
| 25 | 40-1940 | Washer — Wheel | 1 |
| 26 | 3220-5 | Nut — Jam | 1 |
| 27 | 34-0380 | Wheel Assembly | 1 |
| * | 11-5239 | Loose Parts | 1 |

*Not Illustrated

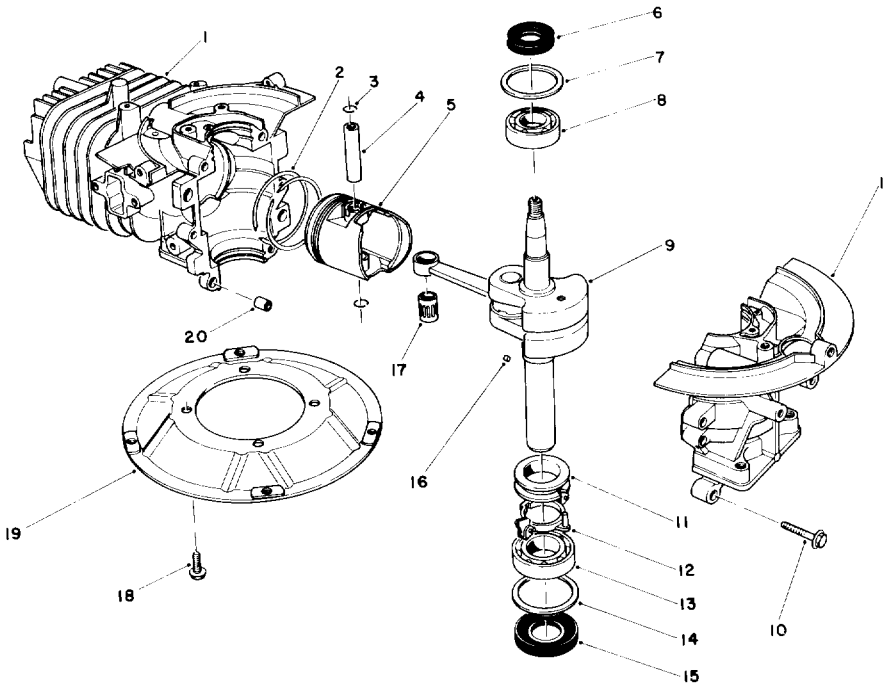


# CRANKSHAFT ASSEMBLY

| Ref. No. | Part No. | Description | No. Used |
|---|---|---|---|
| 1 | 81-2060 | Crankcase/Cylinder Assy. | 1 |
| 2 | 81-0590 | Ring Set | 1 |
| 3 | 81-0620 | Circlip | 2 |
| 4 | 81-0600 | Pin — Wrist | 1 |
| 5 | 81-0580 | Piston (58 mm) | 1 |
| 6 | 81-0720 | Oil Seal — Upper | 1 |
| 7 | 81-0710 | Thrust Washer — Upper | 1 |
| 8 | 81-0690 | Bearing — Upper (20 mm) | 1 |
| 9 | 81-1550 | Crankshaft/Connecting Rod Assembly | 1 |
| 10 | 81-0540 | Bolt (30 mm Lg.) | 6 |

| Ref. No. | Part No. | Description | No. Used |
|---|---|---|---|
| 11 | 81-0770 | Spacer — Governor | 1 |
| 12 | 81-0750 | Bracket — Governor Arm | 1 |
| 13 | 81-0700 | Bearing — Lower (25 mm) | 1 |
| 14 | 81-0730 | Thrust Washer — Lower | 1 |
| 15 | 81-0740 | Oil Seal — Lower | 1 |
| 16 | 81-0760 | Pin — Crankshaft | 1 |
| 17 | 81-0610 | Bearing — Wrist Pin | 1 |
| 18 | 81-0570 | Bolt (20 mm Lg.) | 4 |
| 19 | 81-0560 | Plate — Mounting | 1 |
| 20 | 81-0520 | Pin — Crankcase | 2 |
| * | 11-6289 | Short Block Assembly | 1 |

*Not Illustrated

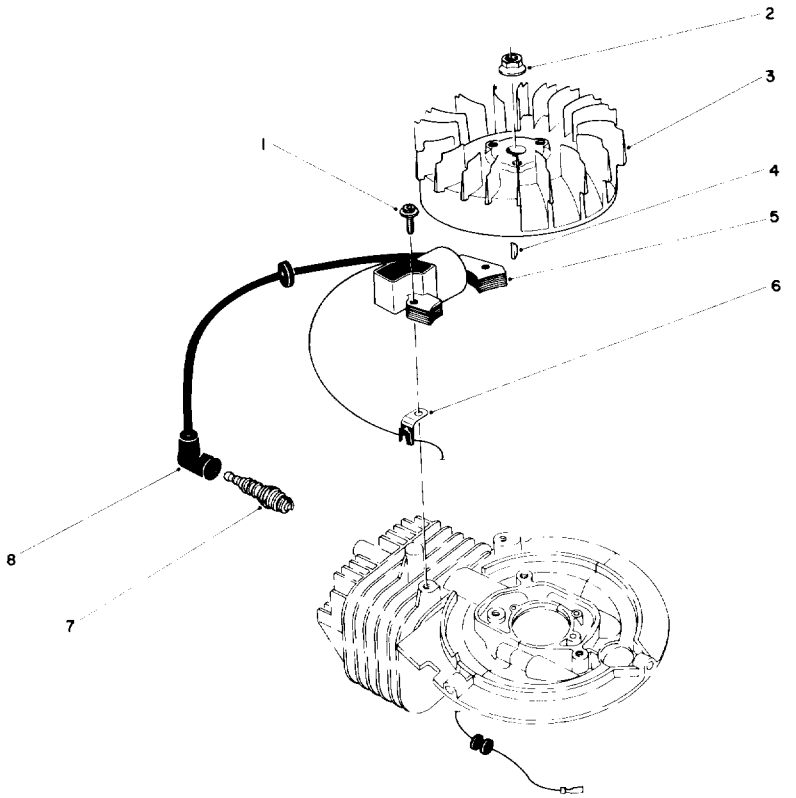


# FLYWHEEL & MAGNETO ASSEMBLY

| Ref. No. | Part No. | Description | No. Used |
|---|---|---|---|
| 1 | 81-2050 | Capscrew — Allenhead | 2 |
| 2 | 81-1330 | Nut | 1 |
| 3 | 81-1980 | Flywheel — Magneto | 1 |
| 4 | 81-1320 | Key — Flywheel | 1 |
| 5 | 81-1990 | Coil/Ignition Assembly | 1 |
| 6 | 81-1480 | Clamp | 1 |
| 7 | 81-0181 | Spark Plug | 1 |
| 8 | 81-1500 | Cover — Spark Plug | 1 |
| * | 41-7650 | Puller — Flywheel | 1 |

*Not Illustrated

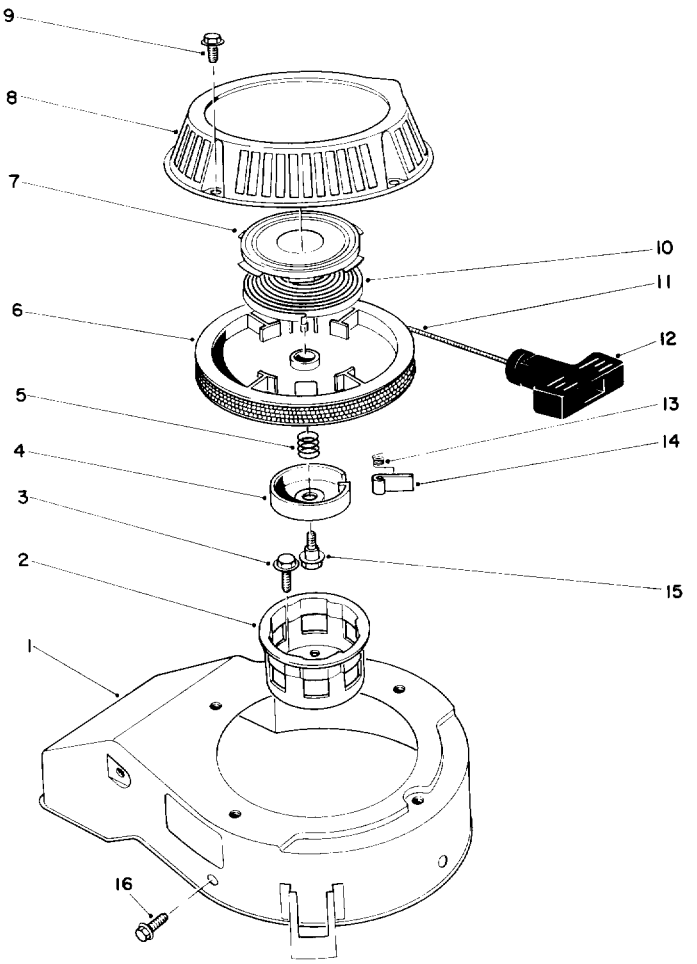


# RECOIL ASSEMBLY

| Ref. No. | Part No. | Description | No. Used |
|---|---|---|---|
| 1 | 81-2070 | Cover — Cooling Fan | 1 |
| 2 | 81-1290 | Cup — Starter Pulley | 1 |
| 3 | 81-1300 | Bolt (16 mm Lg.) | 3 |
| 4 | 81-1250 | Retainer — Dog | 1 |
| 5 | 81-1240 | Spring — Compression | 1 |
| 6 | 81-1210 | Reel — Rope Pulley | 1 |
| 7 | 81-1640 | Retainer — Recoil Spring | 1 |
| 8 | 81-2090 | Case — Recoil | 1 |
| 9 | 81-1280 | Bolt (10 mm Lg.) | 4 |
| 10 | 81-1200 | Spring — Recoil | 1 |
| 11 | 81-1270 | Rope | 1 |

| Ref. No. | Part No. | Description | No. Used |
|---|---|---|---|
| 12 | 81-1630 | Handle — Recoil | 1 |
| 13 | 81-1220 | Spring — Dog | 1 |
| 14 | 81-1230 | Dog | 1 |
| 15 | 81-1260 | Bolt — Shoulder | 1 |
| 16 | 81-1170 | Bolt — Self Tapping (15 mm Lg.) | 3 |
| * | 47-2480 | Stop — Rope | 1 |
| * | 81-2040 | Starter Assembly (Incl. Ref. #4-8, 10-15) | 1 |
| * | 81-2300 | Spring & Retainer (Incl. Ref. #7 & 10) | 1 |

*Not Illustrated

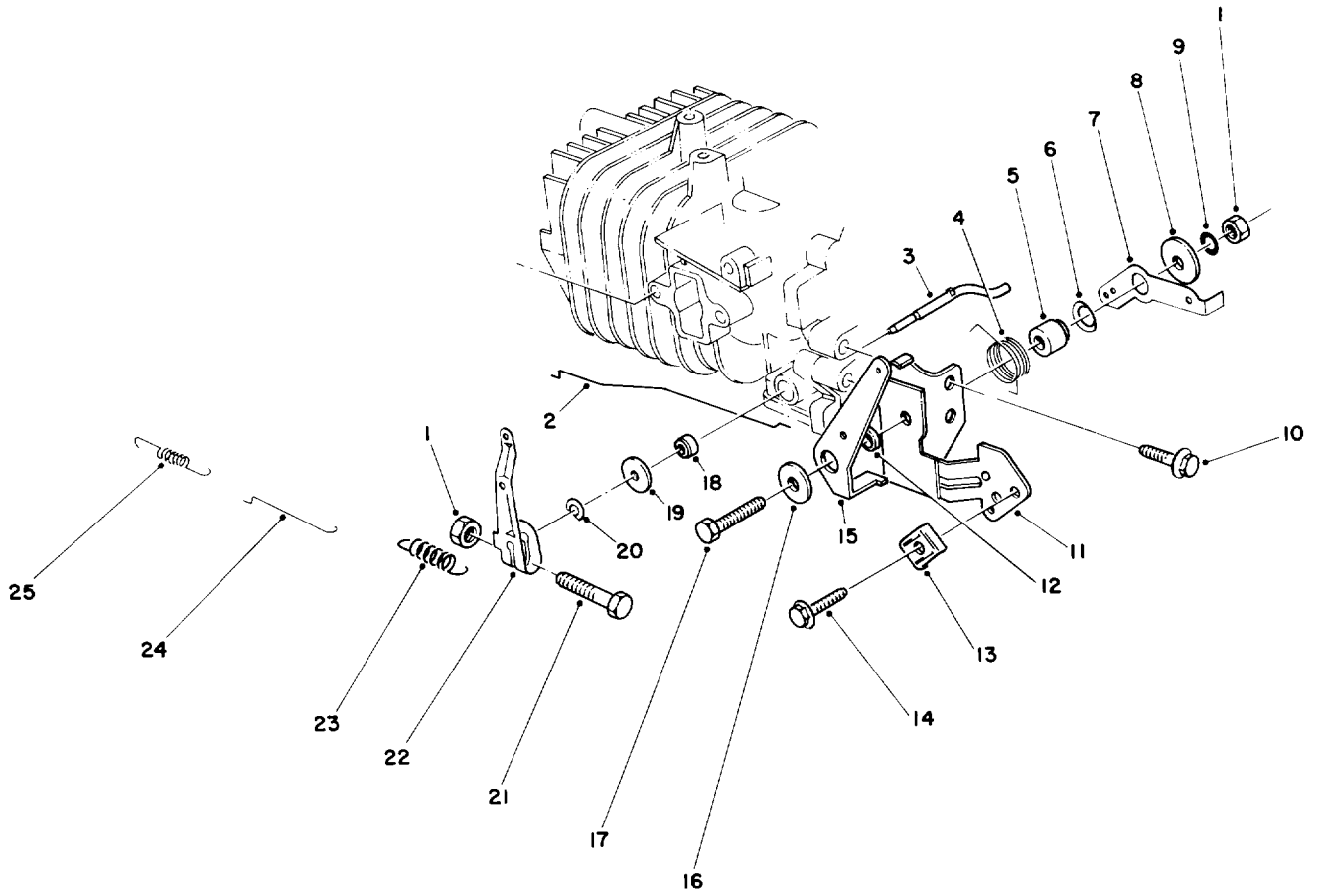


# GOVERNOR ASSEMBLY

| Ref. No. | Part No. | Description | No. Used |
|---|---|---|---|
| 1 | 81-0900 | Nut | 2 |
| 2 | 81-1720 | Rod — Choke | 1 |
| 3 | 81-0840 | Shaft — Governor | 1 |
| 4 | 81-2460 | Spring — Choke Control Lever | 1 |
| 5 | 81-1770 | Spacer — Governor Spring Lever | 1 |
| 6 | 81-1820 | Washer — Governor Spring Lever | 1 |
| 7 | 81-1670 | Lever — Governor Spring | 1 |
| 8 | 81-1750 | Washer — Choke Control Lever | 1 |
| 9 | 81-1450 | Washer — Lock | 1 |
| 10 | 81-1170 | Bolt — Self Tap (15 mm Lg.) | 1 |
| 11 | 81-2420 | Bracket — Throttle Control | 1 |
| 12 | 81-2470 | Spacer — Choke Control Lever | 1 |

| Ref. No. | Part No. | Description | No. Used |
|---|---|---|---|
| 13 | 81-2430 | Clamp — Cable | 1 |
| 14 | 50-0130 | Bolt — Cable Clamp | 1 |
| 15 | 81-1710 | Lever — Choke Control | 1 |
| 16 | 50-0760 | Washer — Choke Control Lever | 1 |
| 17 | 81-1730 | Bolt — Throttle Control Bracket | 1 |
| 18 | 81-0850 | Oil Seal — Governor Shaft | 1 |
| 19 | 81-0860 | Washer | 1 |
| 20 | 81-0870 | E-Ring | 1 |
| 21 | 81-0890 | Bolt — Throttle Lever | 1 |
| 22 | 81-0880 | Lever — Throttle Control | 1 |
| 23 | 81-1970 | Spring — Governor | 1 |
| 24 | 81-0910 | Rod — Carburetor | 1 |
| 25 | 81-0920 | Spring — Carburetor Rod | 1 |

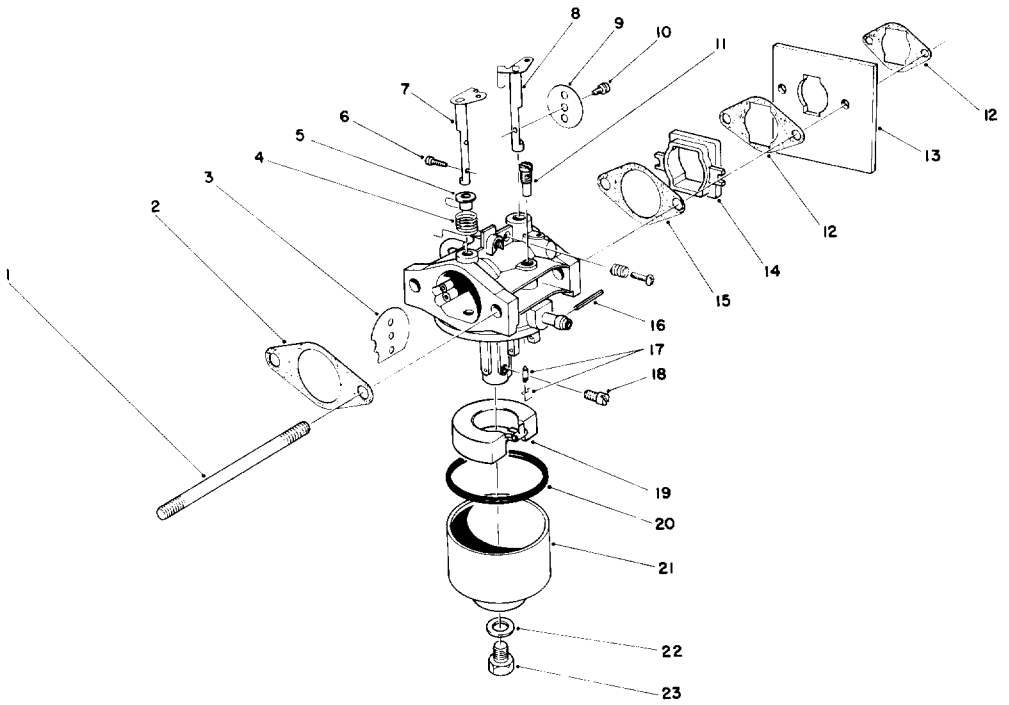


# CARBURETOR ASSEMBLY

| Ref. No. | Part No. | Description | No. Used |
|---|---|---|---|
| 1 | 81-2240 | Stud Bolt — Carburetor | 2 |
| 2 | 81-0090 | Gasket | 1 |
| 3 | 81-0240 | Valve — Choke | 1 |
| 4 | 81-0230 | Spring — Choke | 1 |
| 5 | 81-0220 | Bushing — Choke Valve | 1 |
| 6 | 81-2160 | Screw | 2 |
| 7 | 81-1950 | Shaft — Choke | 1 |
| 8 | 81-0250 | Shaft — Throttle | 1 |
| 9 | 81-0260 | Valve — Throttle | 1 |
| 10 | 81-0270 | Screw — Throttle Valve | 1 |
| 11 | 81-1030 | Jet — Pilot (40) | 1 |
| 12 | 81-2320 | Gasket — Shield | 2 |
| 13 | 81-2330 | Shield — Carburetor | 1 |
| 14 | 81-2190 | Insulator — Carburetor | 1 |
| 15 | 81-0780 | Gasket | 1 |

| Ref. No. | Part No. | Description | No. Used |
|---|---|---|---|
| 16 | 81-0980 | Pin | 1 |
| 17 | 81-1600 | Needle Valve/Spring Wire | 1 |
| 18 | 81-1940 | Jet — Main (76.3) | 1 |
| * | 81-2340 | Jet Main (72.5) High Altitude, Above 6,000 Ft. (Optional) | 1 |
| 19 | 81-0970 | Float | 1 |
| 20 | 81-1010 | Gasket — Float Bowl | 1 |
| 21 | 81-1610 | Bowl — Float | 1 |
| 22 | 81-1020 | Gasket — Bowl Screw | 1 |
| 23 | 81-1000 | Screw — Bowl | 1 |
| * | 81-1960 | Carburetor Kit (Incl. Ref. #2, 15, 17, 20 & 22) | 1 |
| * | 81-1930 | Carburetor Assembly — Complete | 1 |

*Not Illustrated

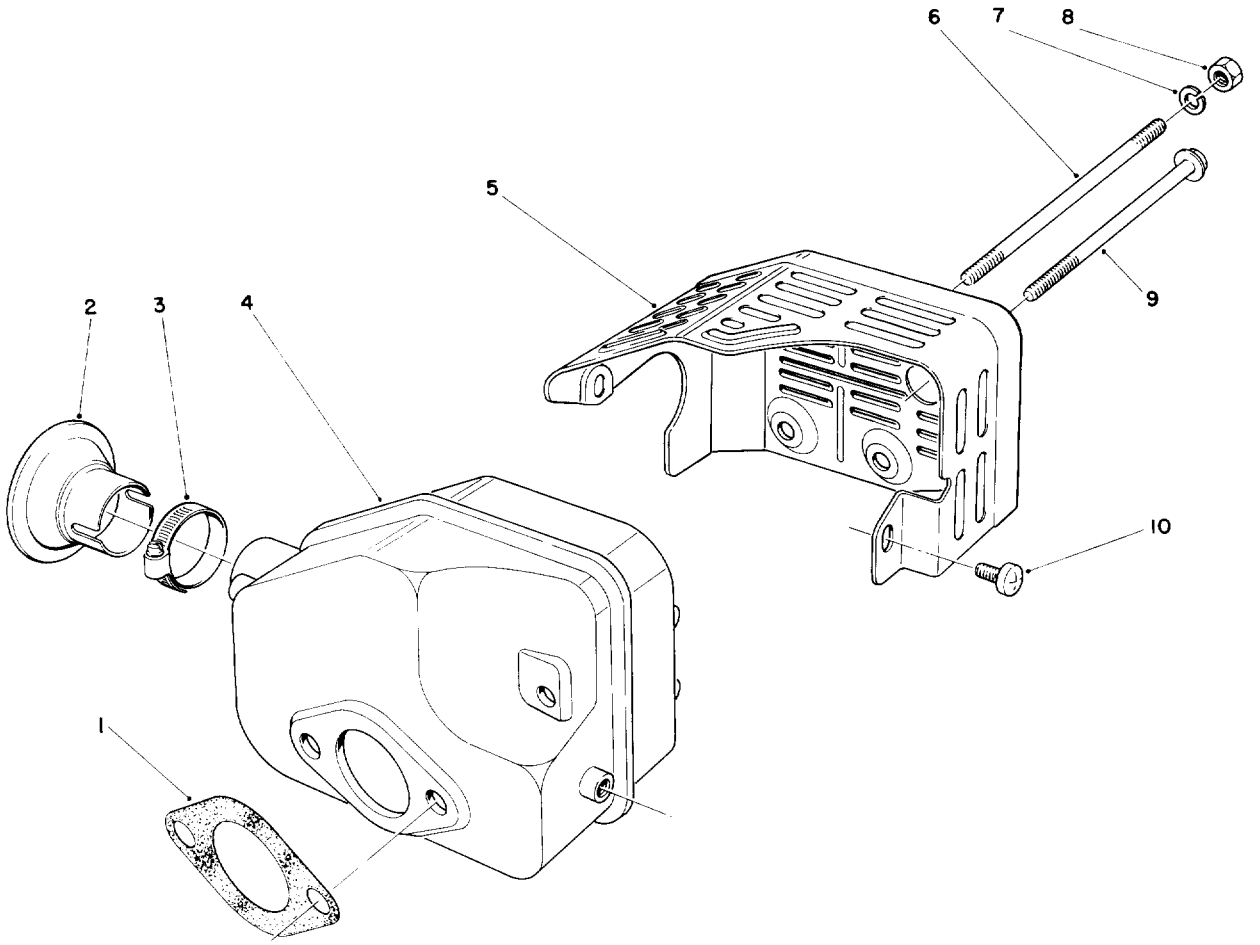


# MUFFLER ASSEMBLY

| Ref. No. | Part No. | Description | No. Used |
|---|---|---|---|
| 1 | 81-1080 | Gasket — Muffler | 1 |
| 2* | 81-0200 | Spark Arrester | 1 |
| 3* | | Clamp | 1 |
| 4 | 81-1090 | Muffler | 1 |
| 5 | 81-2450 | Cover — Muffler | 1 |

| Ref. No. | Part No. | Description | No. Used |
|---|---|---|---|
| 6 | 81-1100 | Bolt | 2 |
| 7 | 81-1120 | Washer — Lock | 2 |
| 8 | 81-1110 | Nut | 2 |
| 9 | 81-1150 | Bolt — Self Tapping | 1 |
| 10 | 81-1140 | Screw — Phillips Hd. | 2 |

*Optional Equipment

NP-587


TORO®