Form Number 3351-331

Greensmaster® 1600

Model No. 04060 - 240000601 and up.

Parts Catalog

Ordering Replacement Parts

To order replacement parts, please supply the part number, the quantity, and the description of each part desired.

Understanding Reference Numbers

Each Identified part in an illustration has a reference number. The reference number for a part also appears in the parts list, along with other information about the part.

This catalog uses two special reference number formats, one to indicate parts in a service assembly and another to indicate the quantity of a given part in an illustration.

Service Assembly Reference Numbers

Parts in service assemblies have reference numbers in the form a:b. The a represents the reference number of the entire service assembly and the b represents a sequential number unique to each part within the service assembly.

For example, a wheel assembly might be identified by reference number 6, the tire by 6:1, the valve by 6:2, and the wheel by 6:3. When you order the assembly identified by reference number 6, you receive all parts identified by reference numbers 6:1, 6:2, and 6:3. However, you may also order any part individually. Reference numbers of this type appear in illustrations and in part lists.

Reference Numbers Indicating Quantity

In an illustration, if a reference number indicates more than one part, the reference number has the form nX y. The n represents the quantity of the part, the X is the multiplication symbol, and the y represents the reference number.

For example, in an illustration, the reference number 2X 37 means that two of the parts identified by reference number 37 are indicated.

©The Toro Company - 2003
All Rights Reserved

Part Description Abbreviations

Part descriptions in this catalog may include the following abbreviations.

AR. . . . . as required
ASM. . . . . assembly
CARR. . . . . carriage
DEG. . . . . degrees
FH. . . . . flat head
GA. . . . . gauge
HF. . . . . hex flange
HH. . . . . hex head
HHF. . . . . hex head flange
HHFTF. . . . . hex head flange thread forming
HJ. . . . . hex jam
HLH. . . . . hex lag head
HOC. . . . . height-of-cut
HS. . . . . hex
HSBH. . . . . hex socket button head
HSFH. . . . . hex socket flat head
HSH. . . . . hex socket head
HWH. . . . . hex washer head
HWHTF. . . . . hex washer head thread forming
HYD. . . . . hydraulic
INC. . . . . incorporated
LH. . . . . left hand
NI. . . . . nylon insert
PPH. . . . . phillips pan head
PTH. . . . . phillips truss head
PTO. . . . . power take off
RH. . . . . right hand
SFH. . . . . slotted fillister head
SHH. . . . . slotted hex head
SHWH. . . . . slotted hex washer head
SPH. . . . . slotted pan head
SQH. . . . . square head
SRH. . . . . slotted round head
STD. . . . . standard
TAP. . . . . self tapping
TTH. . . . . torx truss head
WH. . . . . wing head

Footnotes

❶ Not illustrated

❷ Not serviced separately

❸ Obtain these items directly from OTC 2013 4th St. Owatonna, MN. 55060 1-800-533-0492 (in Minnesota and Canada 1-507-455-7050) Fax. 507-455-7011.

Contents

Description	Page
Frame Assembly	3
Engine Mount and Frame Assembly	4
Reel Drive Assembly	5
Reel Assembly	7
Drum Drive Assembly	8
Drum and Basket Assembly	9
Differential Assembly No. 93-9041	10
Inner Crankshaft Assembly	11
Outer Crankshaft Assembly	12
Engine Assembly	13
Bellcrank Assembly	14
Handle and Control Assembly	15
Roller and Height-of-Cut Bar Assembly	16
Crankcase Assembly	17
Camshaft and Valve Assembly	18
Ignition Assembly	19
Governor Assembly	20
Carburetor Assembly	21
Air Cleaner and Muffler Assembly	22
Fuel Tank Assembly	23
Decals	24
Special Tools Backlapping Brush Assembly No. *TOR299100	25
Special Tool - Bedknife Screw Tool No. *TOR510880	26

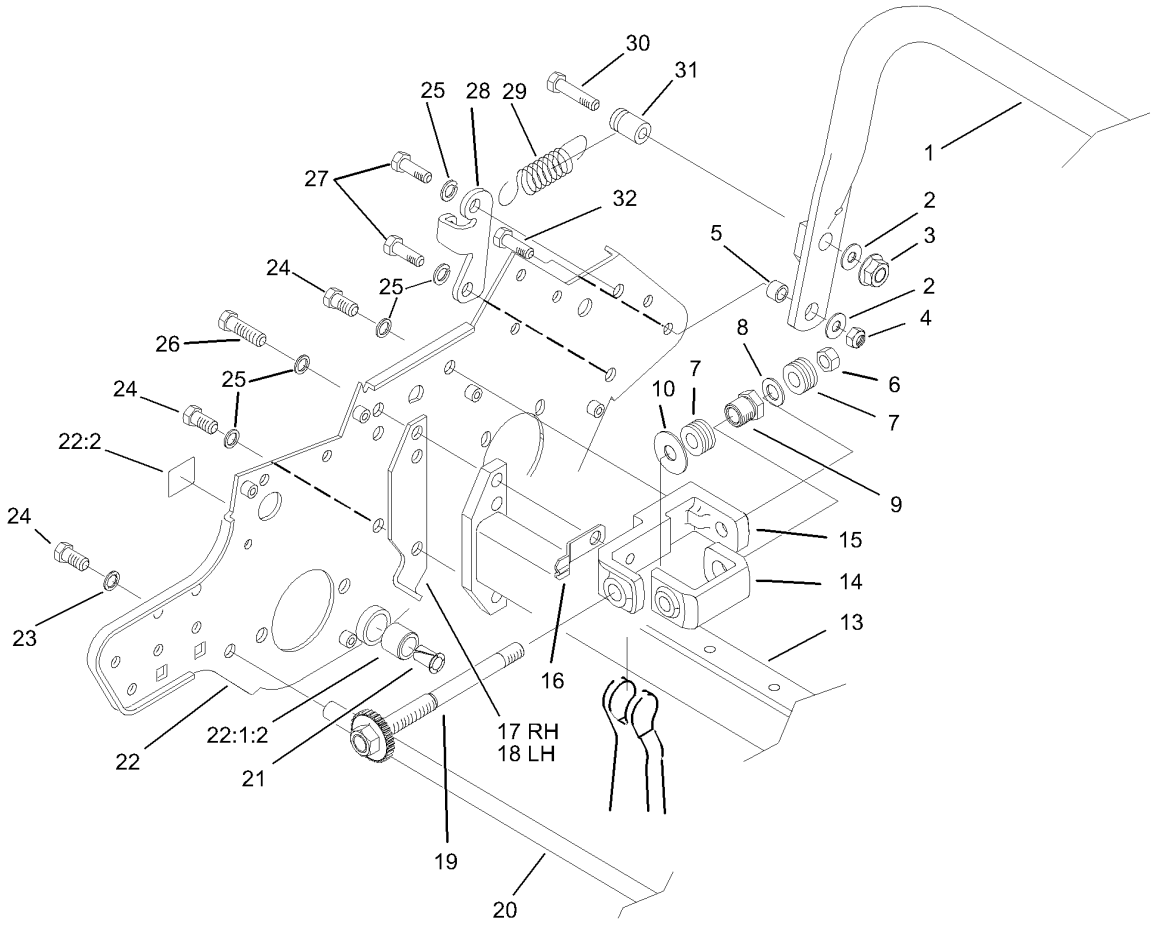

Frame Assembly

Ref	Part No.	Qty.	Description
1	93-9019-03	1	Kickstand
2	3256-2	3	Washer-Flat
3	32128-25	1	Nut-Hex Flange
4	3296-29	2	Nut-Lock, NI
5	65-7910	2	Spacer
6	3296-48	2	Nut-Lock, NI
7	93-9043	32	Washer-Spring, Belleville
8	94-5858	2	Washer
9	105-5379	2	Nut-Spring
10	94-5859	2	Washer-Hardened
13	93-9032-01	1	Frame-Front
14	98-5912	2	Channel-Adjuster, Bedbar
15	94-5854	2	Frame-Adjuster, Bedbar
16	94-5856	2	Spring-Detent
17	88-7100	1	Spacer-RH
18	88-7090	1	Spacer-LH
19	94-5873	2	Screw ASM
20	94-5867	1	Rod-Frame
21	52-2890	2	Bushing-Nylon
22	94-9004	1	RH Side Plate ASM
❶❷22:1		1	RH Side Plate / Bushing ASM
22:1:2	63-9510	1	Bushing
22:2	93-9356	2	Decal-Warning, Belt
22:2	93-9389	2	Decal-Warning, Belt (Japan)

Ref	Part No.	Qty.	Description
23	3254-6	2	Washer-Lock, Internal
24	323-4	6	Screw-HH
25	3253-21	8	Washer-Lock
26	323-6	2	Screw-HH
27	323-5	2	Screw-HH
28	65-7890	1	Bracket
29	65-7880	1	Spring-Extension
30	322-10	1	Screw-HH
31	65-7900	1	Retainer-Spring
32	322-5	2	Screw-HH

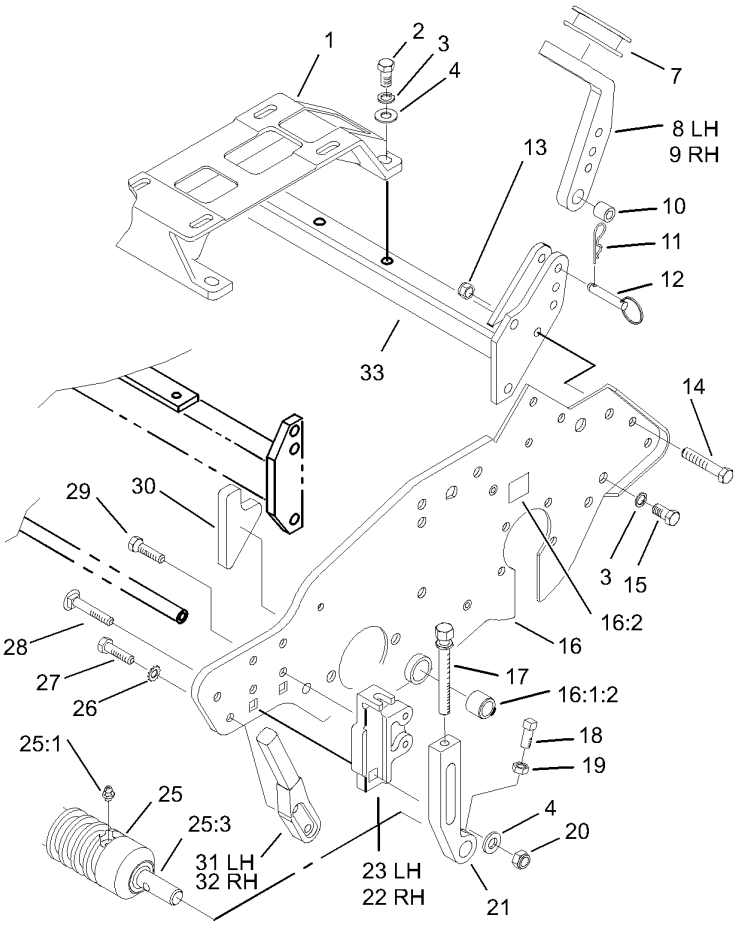

Engine Mount and Frame Assembly

Ref	Part No.	Qty.	Description
1	88-7670	1	Mount-Engine
2	323-5	4	Screw-HH
3	3253-21	8	Washer-Lock
4	3256-24	6	Washer-Flat
7	65-7510	2	Grommet-Handle
8	93-6038	1	Arm-Handle Support, LH
9	93-6037	1	Arm-Handle Support, RH
10	93-6024	2	Bushing-Support, Handle
11	3290-467	2	Pin-Hair
12	93-6029	2	Pin-Clevis, Ring
13	3296-29	2	Nut-Lock, NI
14	322-9	2	Screw-HH
15	323-4	4	Screw-HH
16	94-9005	1	LH Side Plate ASM
❷16:1		1	LH Side Plate / Bushing ASM
16:1:2	63-9510	1	Bushing
16:2	93-9356	1	Decal-Warning, Belt
16:2	93-9389	1	Decal-Warning, Belt (Japan)
17	93-6051	2	Screw-HOC
18	3242-4	2	Screw-Set, SQH
19	3218-2	2	Nut-Jam
20	32128-21	2	Nut-HF
21	93-6090	2	Arm-HOC
21	99-4286	2	Arm-Hoc, Extended

Ref	Part No.	Qty.	Description
22	93-6048	1	Bracket-Hoc, RH
23	93-6049	1	Bracket-Hoc, LH
25	93-9039	1	Weihle Roller ASM
25:1	302-5	2	Fitting-Grease
25:3	52-3180	2	Bearing-Roller, Front
26	3255-8	4	Washer-Lock
27	322-2	4	Screw-HH
28	3231-5	2	Screw-CARR
29	92-8914	4	Bolt-Face, Tapered
30	93-6064	1	Seal-Catcher, Grass
31	93-9018	1	Rod-Basket, LH
32	93-9017	1	Rod-Basket, RH
33	93-9026-01	1	Frame-Rear

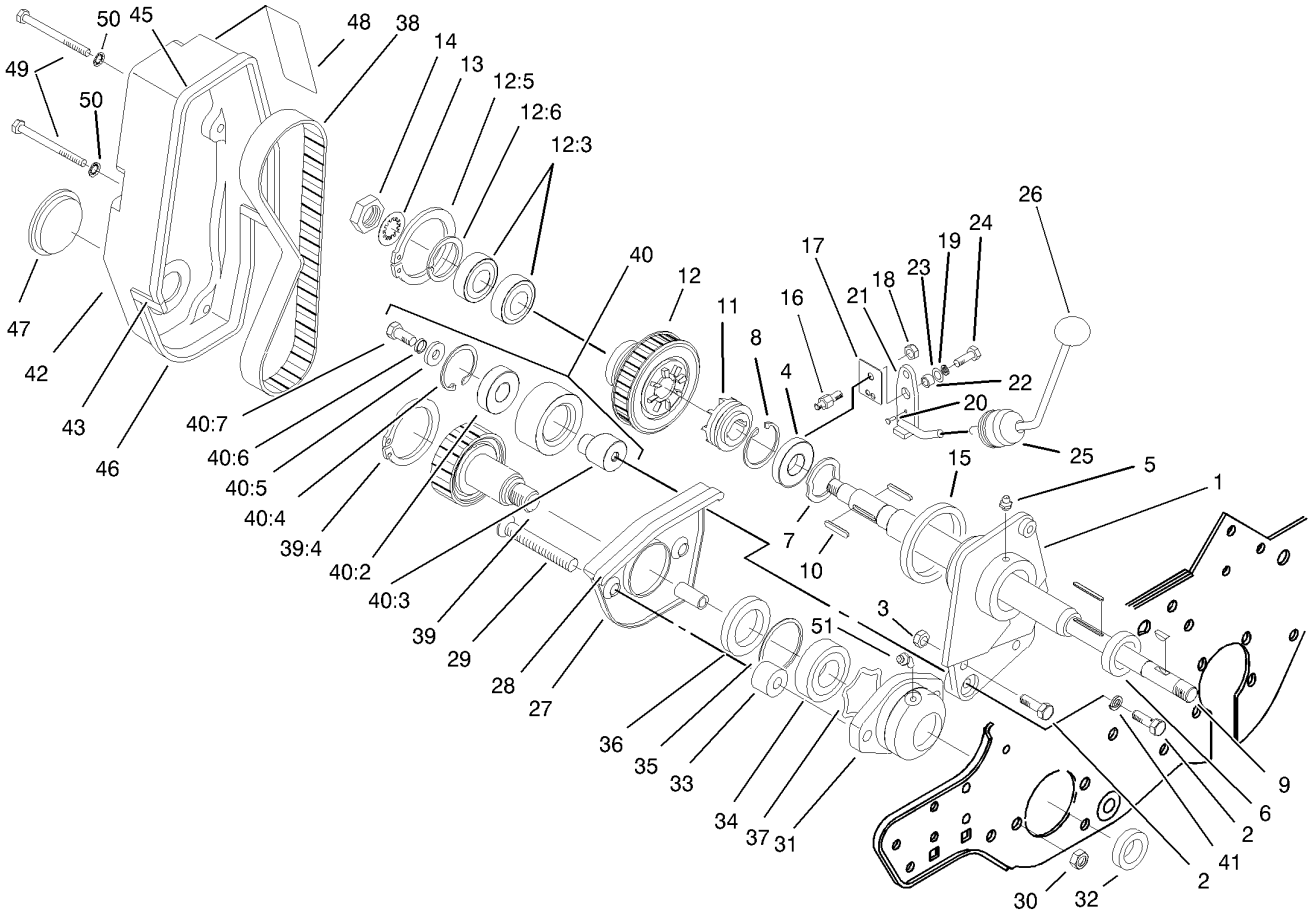

Reel Drive Assembly

Ref	Part No.	Qty.	Description
1	92-8013	1	Housing-Clutch
2	322-5	3	Screw-HH
3	3296-29	2	Nut-Lock, NI
4	251-318	1	Bearing
5	302-5	1	Fitting-Grease
6	253-118	1	Seal-Oil
7	88-7720	1	Spring-Wave
8	32151-75	1	Ring-Retaining
9	94-5872	1	Shaft-Power
10	88-7150	2	Key
11	65-6940	1	Clutch-Slider, Jaw
12	88-7830	1	Clutch And Pulley ASM
12:3	251-336	2	Bearing-Ball
12:5	32151-95	1	Ring-Retaining
12:6	32151-89	1	Ring-Retaining, Bowed
13	3254-4	1	Washer-Lock/int
14	3220-5	1	Nut-Jam
15	65-6970	1	Seal-Felt
16	93-9014	1	Pin-Clutch, Actuator
17	65-6290	1	Spring-Detent, Clutch
18	3296-42	1	Nut-Lock, NI
19	3253-3	1	Washer-Lock
20	95-5731	1	Screw-Drive
21	88-7170	1	Lever-Clutch

Ref	Part No.	Qty.	Description
22	88-7860	1	Spacer-Clutch
23	3290-414	1	Washer-Belleville
24	321-4	1	Screw-HH
25	65-8960	1	Boot-Clutch
26	233-69	1	Knob
27	65-7190-01	1	Cover-Arm, Groomer
28	65-7131	1	Seal-Cover, Strip
29	3289-23	2	Capscrew
30	3296-39	2	Nut-Lock, NI
31	65-8640	1	Housing-Bearing
32	253-96	1	Seal-Oil
33	65-8290	2	Standoff-Cover
34	251-342	1	Bearing-Ball
35	32151-92	1	Ring-Retaining
36	253-163	1	Seal
37	3290-485	1	Washer-Wave
38	65-6200	1	Belt
39	88-7840	1	Pulley And Drive ASM
39:4	32151-95	1	Ring-Retaining
40	88-7850	1	Idler Pulley ASM
40:2	38-7820	1	Bearing-Ball
40:3	88-7190	1	Spacer
40:4	32120-42	1	Ring-Retaining
40:5	88-7200	1	Washer-Flat

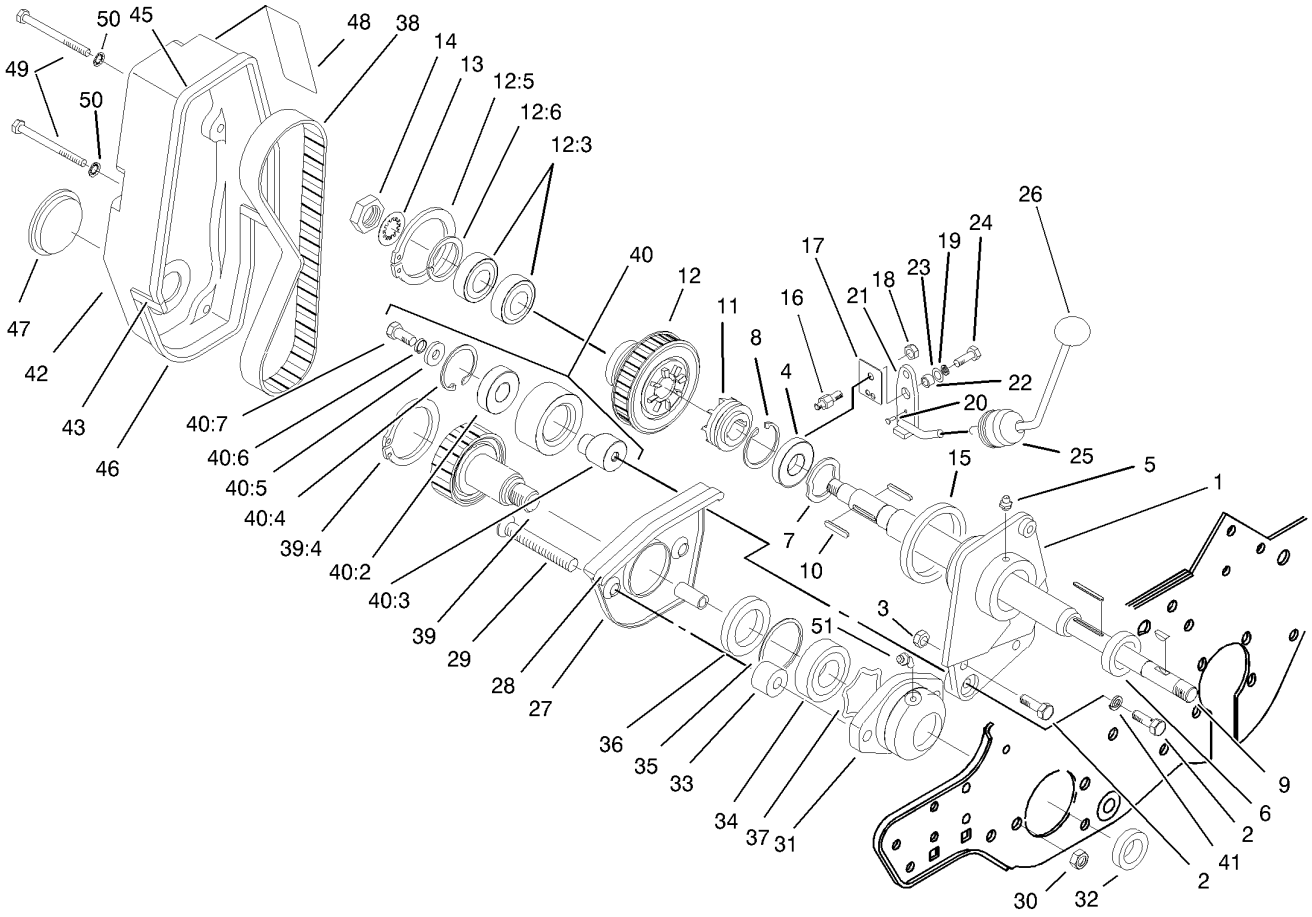

Reel Drive Assembly (continued)

Ref	Part No.	Qty.	Description
40:6	3253-4	1	Washer-Lock
40:7	322-3	1	Screw-HH
41	3253-4	1	Washer-Lock
42	88-7700-01	1	Cover-Reel, Drive
43	88-7770	2	Strip-Seal, Front
45	88-7790	1	Strip-Seal, Upper
46	88-7800	1	Strip-Seal, Lower
47	237-160	1	Plug-Rubber
48	92-4817	1	Decal-Engagement, Reel (Japan)
48	93-7346	1	Decal-Engagement, Reel
49	321-20	4	Screw-HH
50	3254-8	4	Washer-Lock
51	302-11	1	Fitting-Lube, 45 DEG

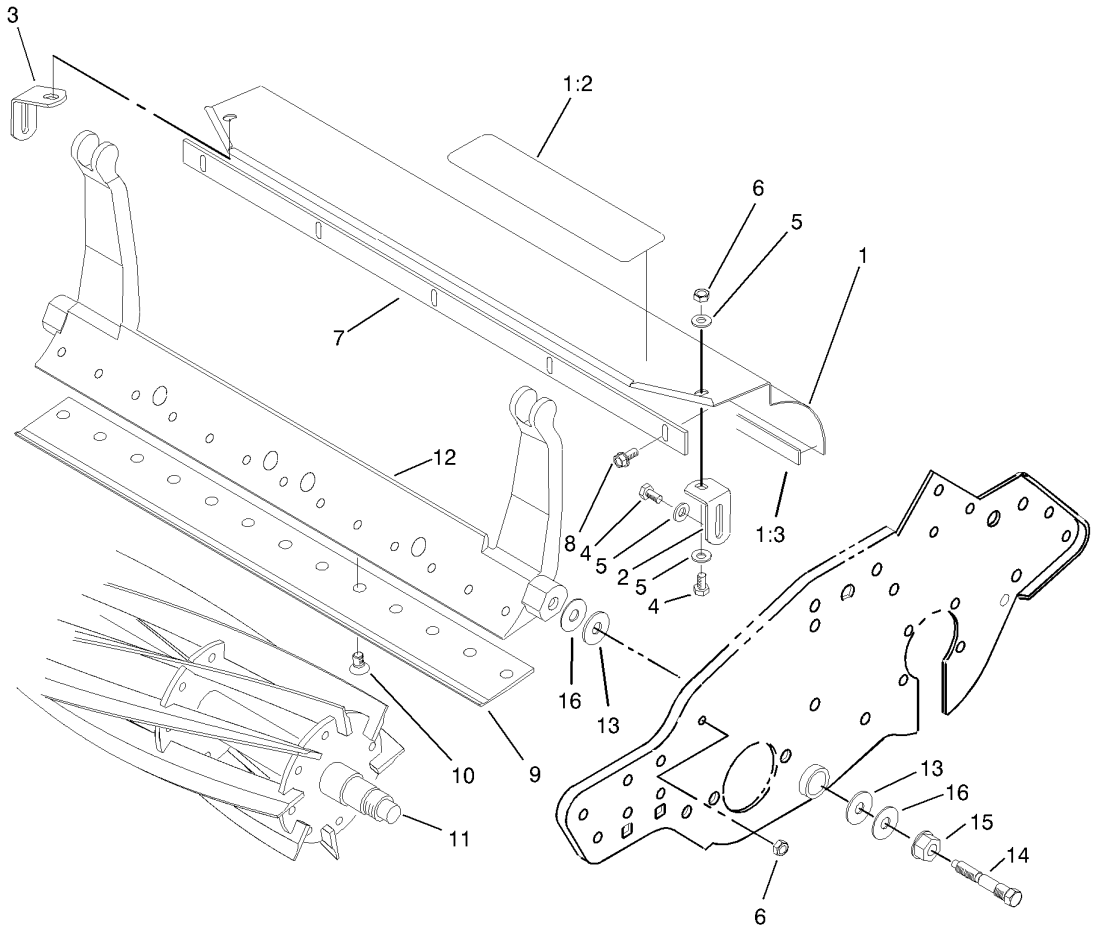

Reel Assembly

Ref	Part No.	Qty.	Description
1	94-9009	1	Grass Shield ASM
1:2	84-6560	1	Decal-Warning (Japan)
1:2	93-8064	1	Decal-Danger, Ce
1:3	95-1636	1	Strip-Seal
2	65-6450	1	Bracket-LH
3	65-6460	1	Bracket-RH
4	321-3	4	Screw-HH
5	3256-22	6	Washer-Flat
6	3296-42	4	Nut-Lock, NI
7	94-5879	1	Bar-Cut Off
8	104-2065	6	Screw-HWH
❶9	104-2646	1	Bedknife-Highcut
9	93-9015	1	Bedknife-Lowcut
❶9	94-5885	1	Bedknife-Tournament Cut
10	57-4910	16	Screw
11	95-0900	1	8 Blade Reel ASM
12	93-9049-01	1	Bedbar-Machine
13	52-2900	4	Washer
14	65-6270	2	Bolt-Bedbar
15	32128-48	2	Nut-HHF
16	52-2860	4	Washer

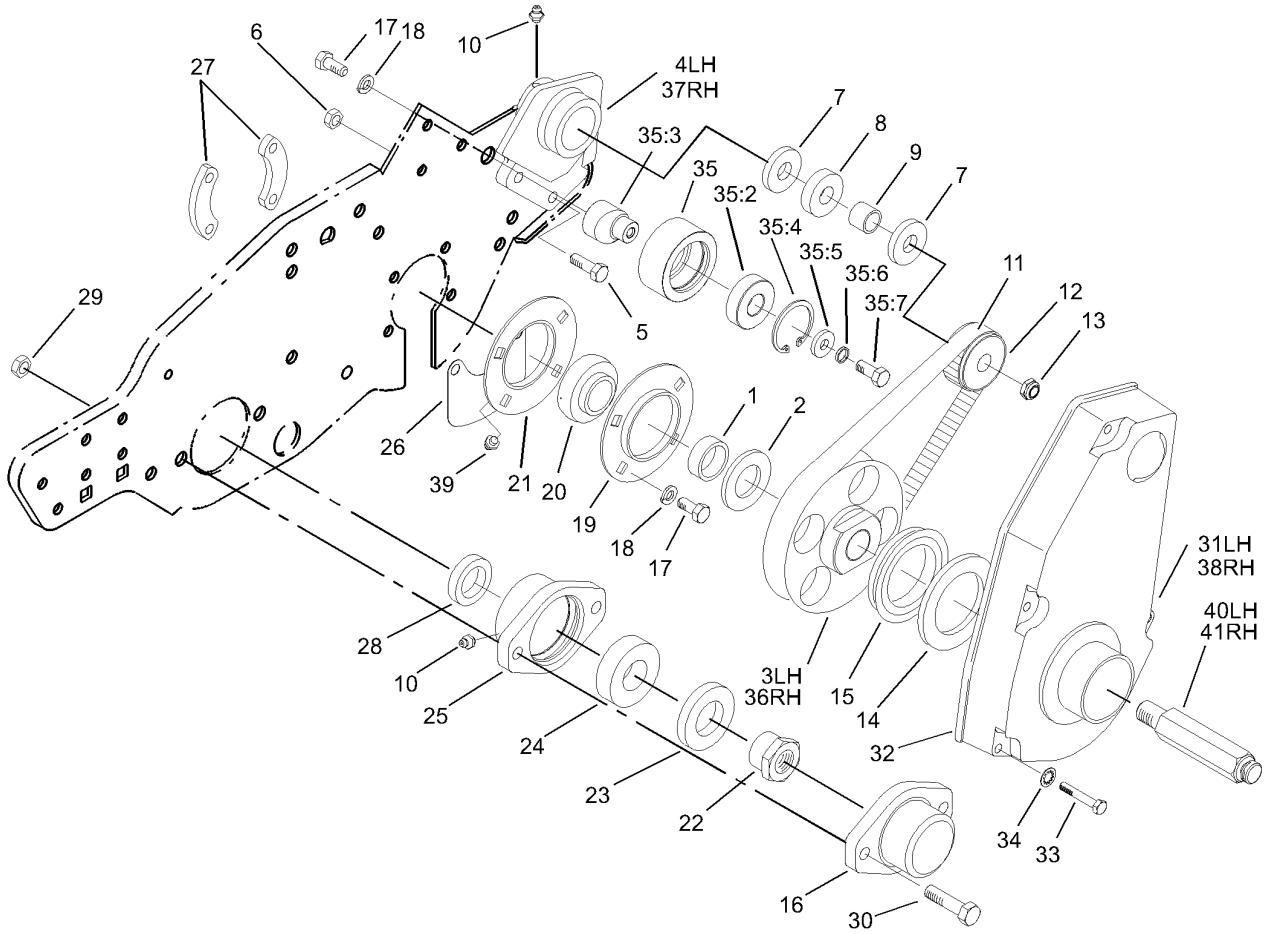

Drum Drive Assembly

Ref	Part No.	Qty.	Description
1	88-7530	2	Spacer
2	88-7540	2	Washer-Backup
3	105-5365	1	Pulley-Drum, LH
4	88-7470	1	Housing-LH
5	322-5	4	Screw-HH
6	3296-29	4	Nut-Lock, NI
7	253-160	4	Seal-Grease
8	251-338	2	Bearing-Ball
9	86-7130	2	Spacer-Pulley
10	302-5	2	Fitting-Grease
11	65-6210	2	Belt
12	65-6660	2	Pulley
13	3296-57	2	Nut-Lock, NI
14	94-9018	2	Washer-Plastic
15	253-161	2	Seal-V-Ring
16	65-6220-01	1	Cover-End, Reel
17	322-3	10	Screw-HH
18	3253-4	10	Washer-Lock
19	65-6590	2	Flangette-Bearing
20	88-7880	2	Bearing
21	95-0923	2	Flangette
22	92-7302	1	Nut-Bearing, Lock
23	253-163	1	Seal
24	251-342	1	Bearing-Ball

Ref	Part No.	Qty.	Description
25	65-8640	1	Housing-Bearing
26	65-8720	2	Closure-Plate, Side
27	65-8730	4	Clamp-Bearing
28	253-96	1	Seal-Oil
29	3296-39	2	Nut-Lock, NI
30	323-7	2	Screw-HH
31	88-7680-01	1	Cover-Belt Drum, LH
32	88-7810	2	Seal-Strip, Drum Cover
33	321-11	8	Screw-HH
34	3254-8	8	Washer-Lock
35	88-7850	2	Idler Pulley ASM
35:2	38-7820	1	Bearing-Ball
35:3	88-7190	1	Spacer
35:4	32120-42	1	Ring-Retaining
35:5	88-7200	1	Washer-Flat
35:6	3253-4	1	Washer-Lock
35:7	322-3	1	Screw-HH
36	105-5364	1	Pulley-Drum, RH
37	88-7490	1	Housing-RH
38	88-7690-01	1	Cover-Drum Belt, RH
39	302-40	2	Fitting-Grease
40	88-7580	1	Shaft-Wheel, Transport LH
41	88-7590	1	Shaft-Wheel, Transport RH
42	302-11	1	Fitting-Lube, 45 DEG

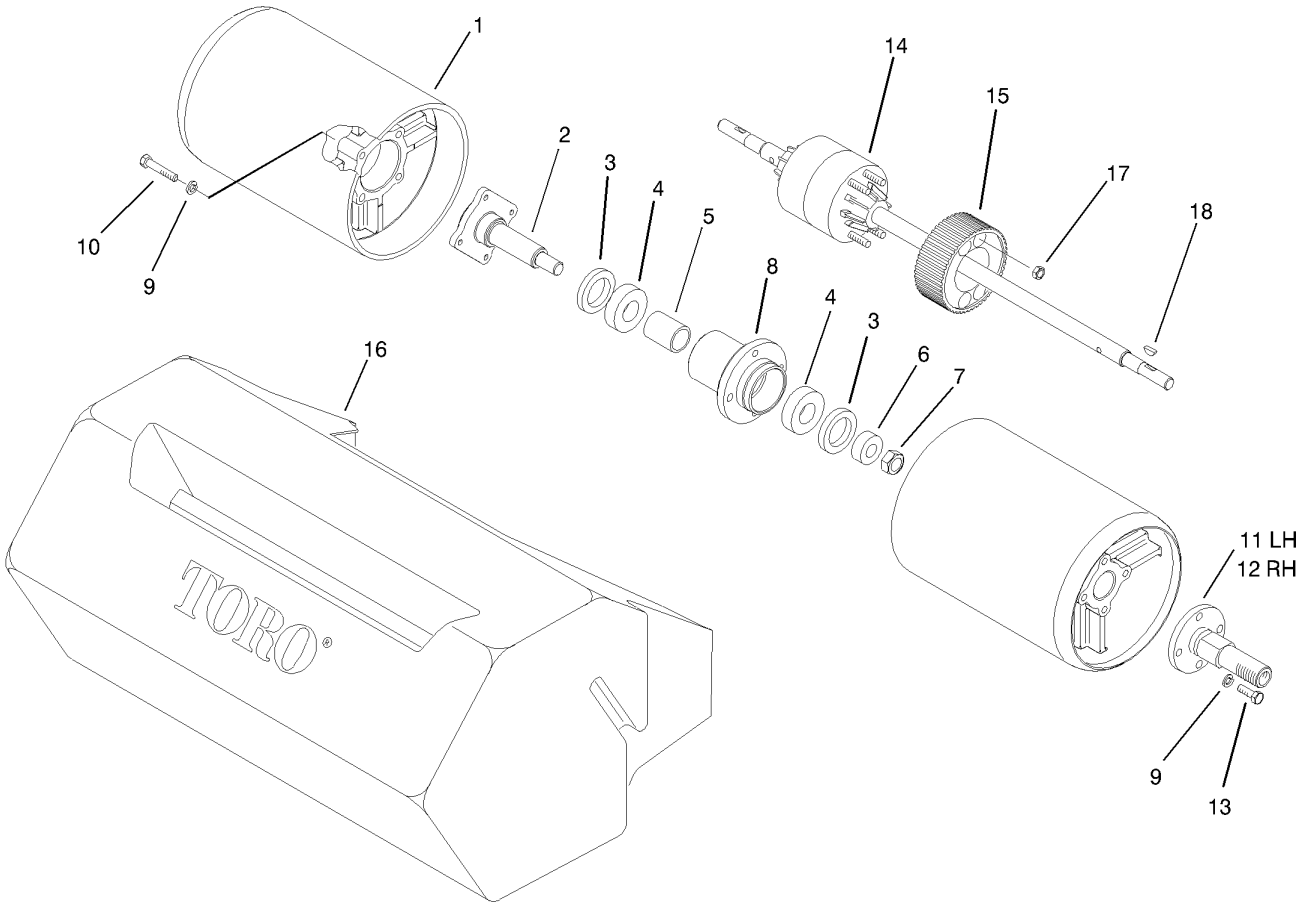

Drum and Basket Assembly

Ref	Part No.	Qty.	Description
1	93-9042	2	Drum-Long
2	94-5850	1	Spindle-Drum
3	253-159	2	Seal
4	251-82	2	Bearing-Ball
5	65-6520	1	Spacer
6	65-6530	1	Spacer-Ride, Seal
7	3296-33	1	Nut-Lock, NI
8	94-5852	1	Hub-Drum
9	3253-4	16	Washer-Lock
10	322-9	8	Screw-HH
11	88-7520	1	Shaft-Extension, Drum
12	88-7510	1	Shaft-Extension, Drum
13	322-5	8	Screw-HH
14	93-9041	1	Differential
15	65-9120	1	Pulley-Housing, Differential
16	94-5893	1	Basket ASM
❶16:1	3290-409	9	Rivet
❶16:3	94-5894	1	Channel-Basket
17	3296-47	4	Nut-Lock, NI
18	3257-30	2	Key-Woodruff

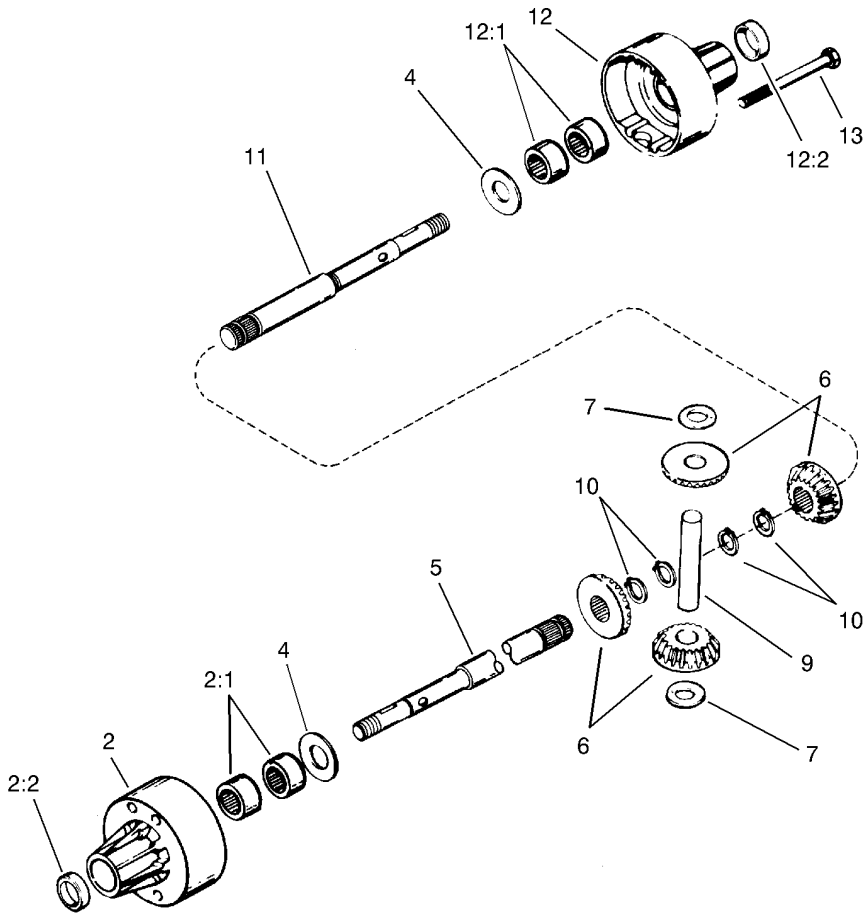

Differential Assembly No. 93-9041

Ref	Part No.	Qty.	Description
2	95-5741	1	Carrier-Differential
2:1	95-5738	4	Bearing-Needle
2:2	95-5737	2	Seal-Oil
4	95-5745	2	Washer
5	95-5743	1	Axle-Long
6	104-0503	1	Gear Set-Differential
7	95-5744	2	Washer-Flat
9	95-5747	1	Pin-Drive
10	95-5746	4	Ring-Retaining
11	95-5742	1	Axle-Short
12	95-5740	1	Carrier-Differential
12:1	95-5738	4	Bearing-Needle
12:2	95-5737	2	Seal-Oil
13	95-5739	4	Screw
❶14	95-5734	1	Grease

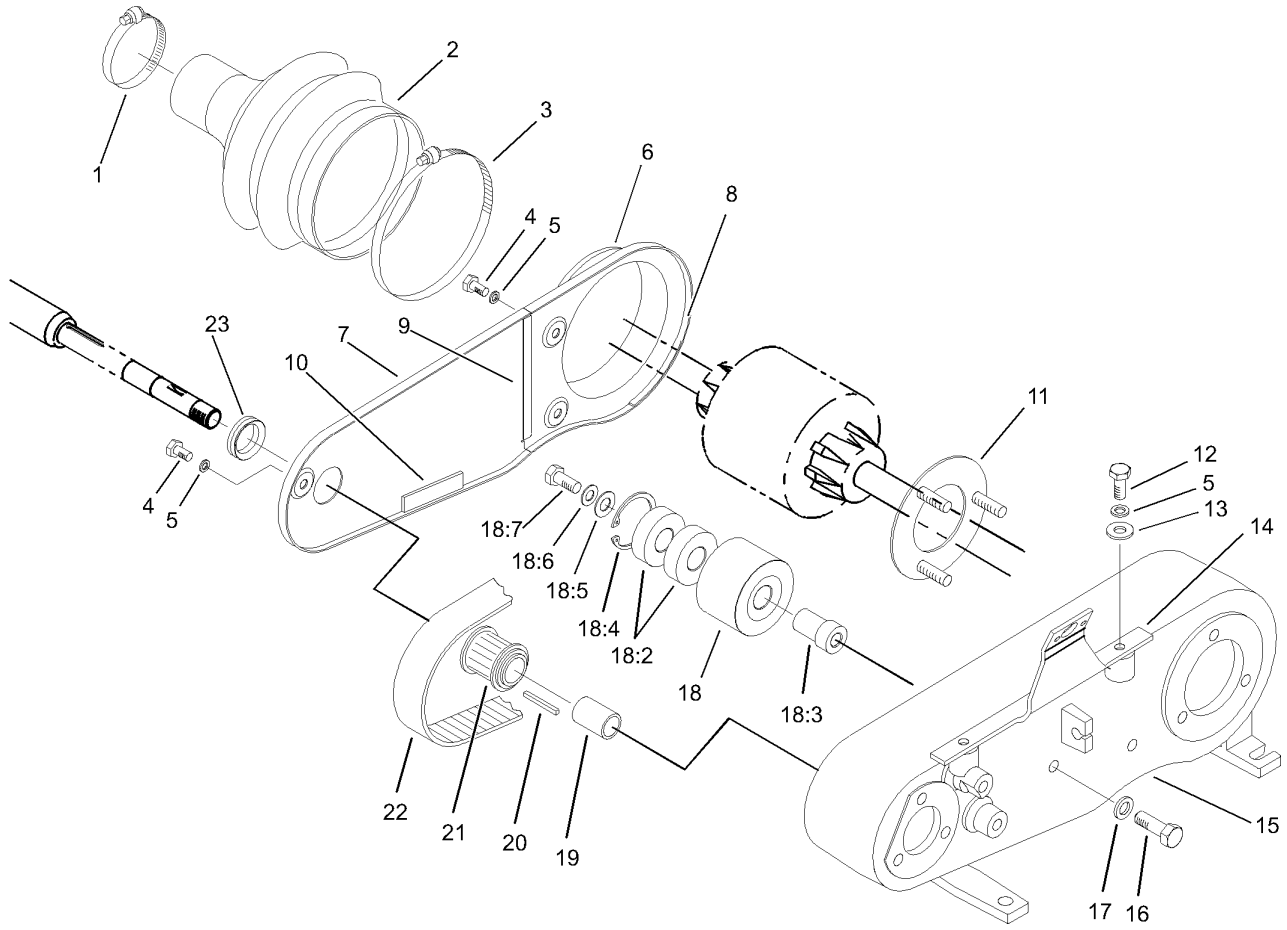

Inner Crankshaft Assembly

Ref	Part No.	Qty.	Description
1	2412-139	1	Clamp-Hose
2	94-5866	1	Boot-Differential
3	2412-140	1	Clamp-Hose
4	321-2	3	Screw-HH
5	3253-3	5	Washer-Lock
6	88-7250-03	1	Cover-Box, Rear
7	88-7240-03	1	Cover-Box, Front
8	65-6902	1	Strip-Seal, Cover
9	65-6903	1	Strip-Seal, Cover
10	65-6901	1	Strip-Seal, Cover
11	65-6720	1	Plate-Screw
12	321-3	2	Screw-HH
13	3256-22	2	Washer-Flat
14	93-1448	1	Bracket Cover ASM
15	88-7230	1	Housing-Shaft, Counter
16	322-5	1	Screw-HH
17	3253-4	1	Washer-Lock
18	88-7870	1	Idler Pulley ASM
18:2	38-7820	2	Bearing-Ball
18:3	88-7380	1	Spacer-Pulley
18:4	32120-42	1	Ring-Retaining
18:5	88-7200	1	Washer-Flat
18:6	3253-4	1	Washer-Lock
18:7	322-3	1	Screw-HH

Ref	Part No.	Qty.	Description
19	86-7140	1	Spacer
20	65-6850	1	Key-Square
21	65-8910	1	Pulley-Countershaft
22	65-9080	1	Belt
23	88-7710	1	Seal-V-Ring

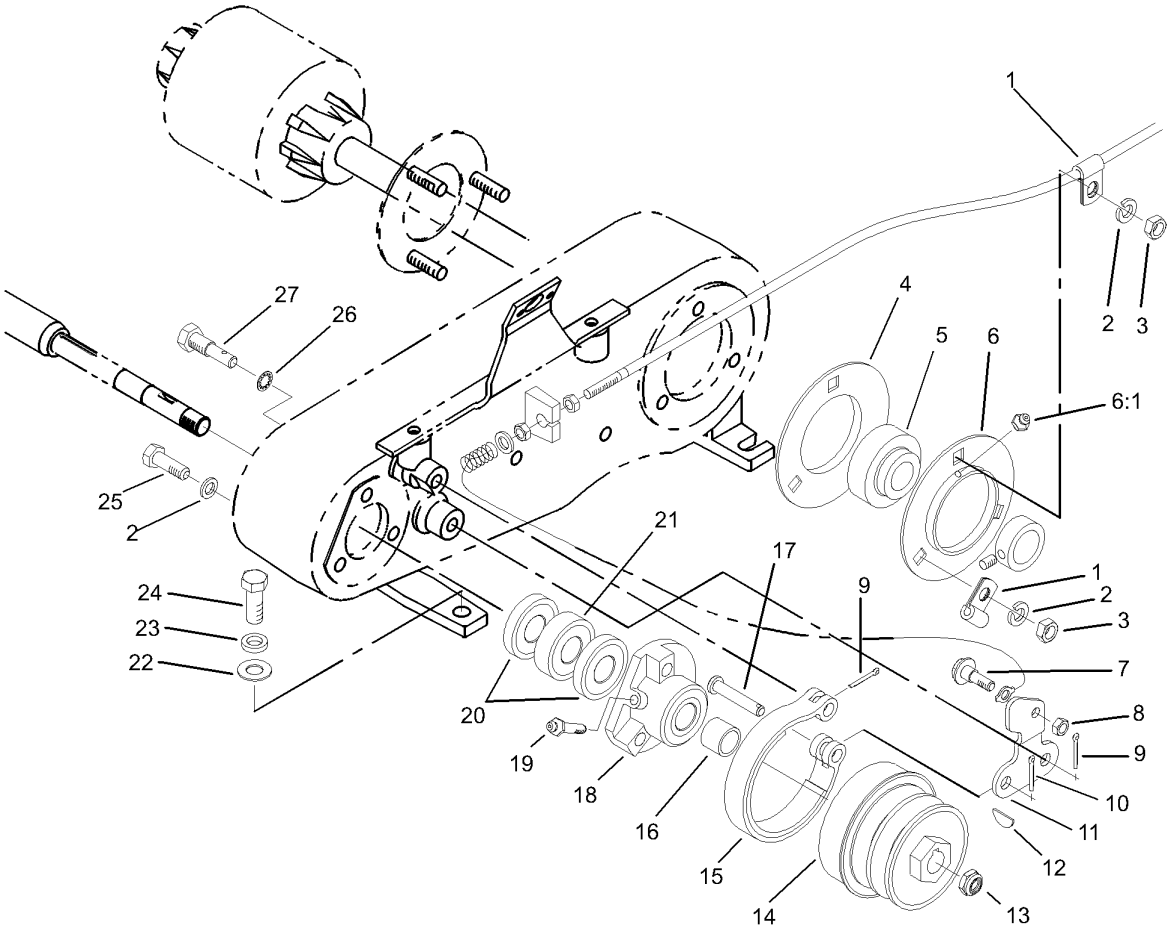

Outer Crankshaft Assembly

Ref	Part No.	Qty.	Description
1	88-7970	2	Clip
2	3253-4	6	Washer-Lock
3	3218-2	3	Nut-Jam
4	65-6710	1	Flangette-Bearing
5	251-343	1	Bearing-Ball
6	65-6700	1	Flangette-Lube
6:1	302-65	1	Zerk
7	11-9030	1	Screw-Shoulder
8	3296-42	1	Nut-Lock, NI
9	3272-6	2	Pin-Cotter
10	3272-8	1	Pin-Cotter
11	65-8610	1	Lever-Brake
12	3257-30	1	Key-Woodruff
13	3296-57	1	Nut-Lock, NI
14	92-9212	1	Pulley-Shaft, Input
15	65-8700	1	Band-Brake
16	86-7130	1	Spacer-Pulley
17	283-75	1	Pin-Clevis
18	65-6760	1	Housing-Bearing
19	302-64	1	Fitting-Grease
20	253-160	2	Seal-Grease
21	251-338	1	Bearing-Ball
22	3256-24	4	Washer-Flat
23	3253-21	4	Washer-Lock

Ref	Part No.	Qty.	Description
24	323-5	4	Screw-HH
25	322-5	3	Screw-HH
26	3254-6	2	Washer-Lock, Internal
27	65-6810	2	Support-Brake

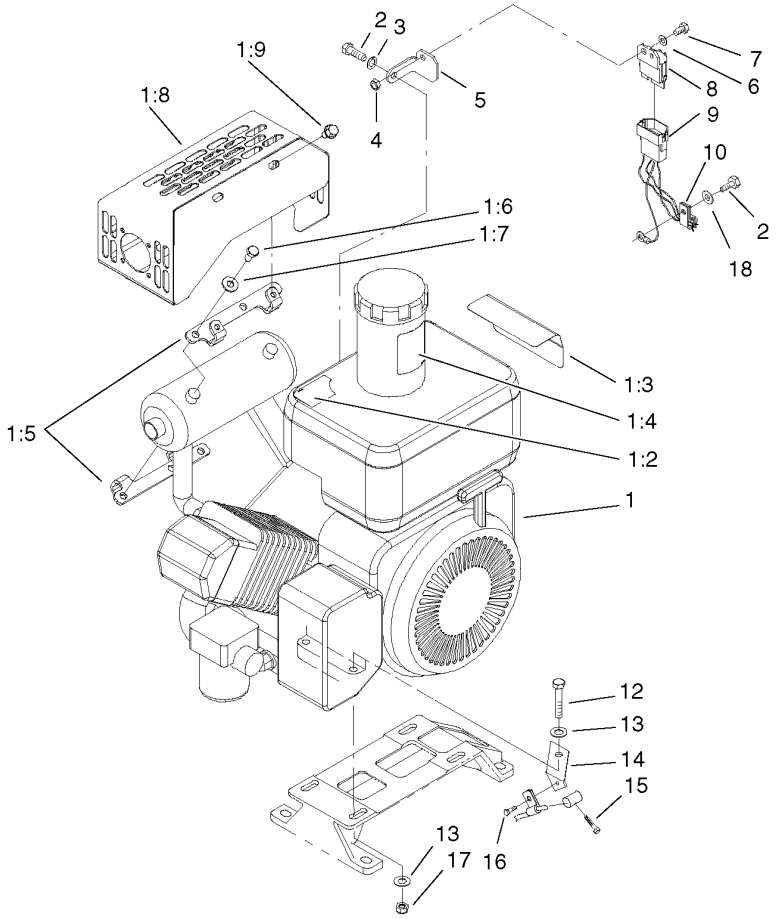

Engine Assembly

Ref	Part No.	Qty.	Description
1	107-7636	1	Engine ASM
1:2	105-5309	1	Decal-Surface, Hot
1:2	83-2560	1	Decal-Surface, Hot (Japan)
1:3	92-4813	1	Decal-Danger (Japan)
1:3	93-7348	1	Decal-Danger
1:4	93-9886	1	Decal-Fuel
1:5	104-9771	2	Bracket-Guard, Muffler
1:6	33113-012	4	Screw-HH
1:7	3256-22	4	Washer-Flat
1:8	104-9784-03	1	Guard-Muffler
1:9	104-2628	4	Screw-HWH
2	33114-016	2	Screw-HH
3	3253-4	1	Washer-Lock
4	33023-00	1	Nut-Lock
5	94-5861	1	Bracket-Module
6	3256-22	1	Washer-Flat
7	33113-016	1	Screw-HH
8	1-323430	1	Module-Interlock
9	105-5351	1	Harness-Wire, Module
10	2412-93	1	Clamp-R
12	322-9	4	Screw-HH
13	3256-56	5	Washer-Flat
14	88-7960	1	Bracket-Cable, Throttle
15	94-9015	1	Screw-HH

Ref	Part No.	Qty.	Description
16	104-2065	1	Screw-HWH
17	3296-29	4	Nut-Lock, NI
18	33094-00	1	Washer-Flat

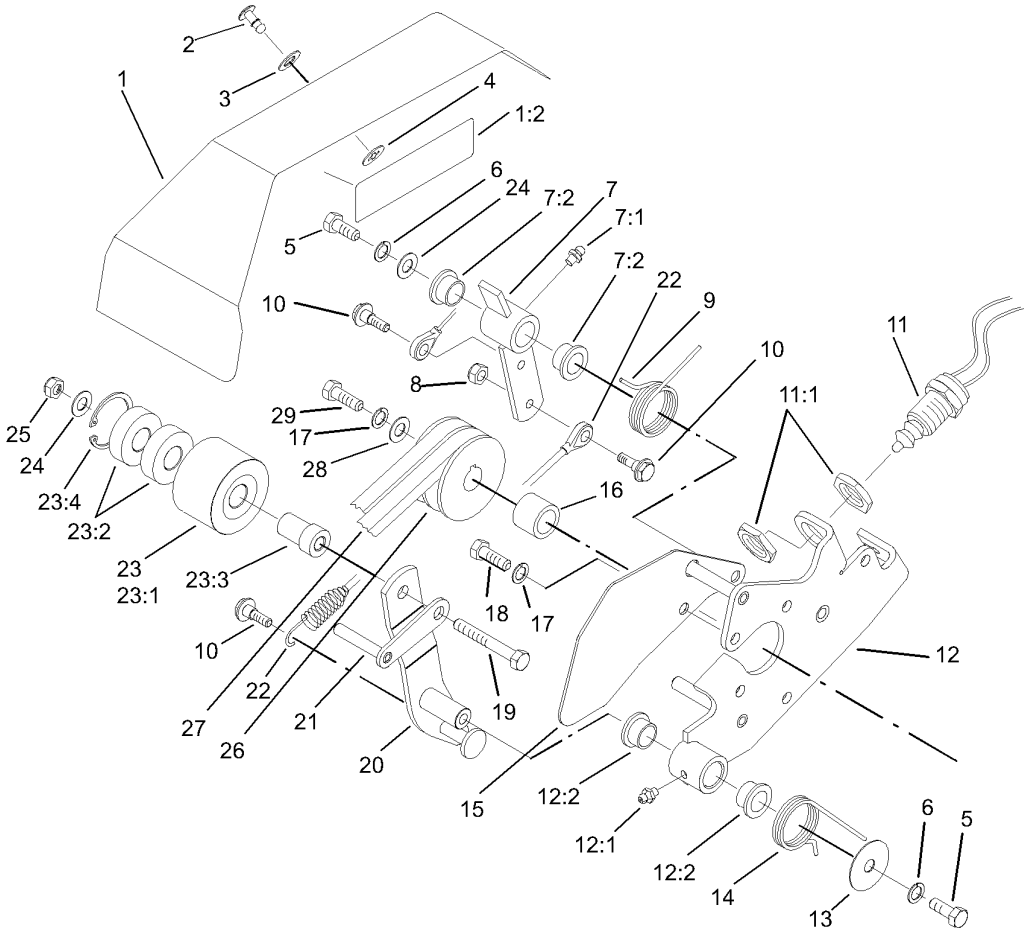

Bellcrank Assembly

Ref	Part No.	Qty.	Description
1	94-9007	1	Bellcrank Cover ASM
1:2	84-7280	1	Decal-Danger, Japan
1:2	93-7273	1	Decal-Danger
2	93-6074	1	Stud
3	3256-2	1	Washer-Flat
4	93-6073	1	Retainer
5	323-4	2	Screw-HH
6	3253-21	2	Washer-Lock
7	93-6014	1	Lever ASM
7:1	302-5	1	Fitting-Grease
7:2	65-8770	2	Bushing-Bellcrank
8	3296-42	3	Nut-Lock, NI
9	93-6011	1	Spring-Torsion
10	11-9030	3	Screw-Shoulder
11	87-5490	1	Switch-Clutch
11:1	3218-20	2	Nut-Jam
12	93-6015	1	Clutch Bracket ASM
12:1	302-5	1	Fitting-Grease
12:2	65-8770	2	Bushing-Bellcrank
13	93-6099	1	Washer
14	93-6012	1	Spring-Torque, Clutch Lever
15	93-6013-03	1	Shield-Belt
16	65-8260	1	Spacer-Shaft, Engine
17	3253-4	6	Washer-Lock

Ref	Part No.	Qty.	Description
18	33114-016	5	Screw-HH
19	323-11	1	Screw-HH
20	93-6003-03	1	Lever-Clutch
21	95-0922	1	Guide-Belt
22	93-9024	1	Cable Link ASM
23	98-7296	1	Idler Pulley ASM
23:1	98-7297	1	Pulley-Idler
23:2	38-7820	2	Bearing-Ball
23:3	88-7350	1	Bushing-Pulley
23:4	32120-42	1	Ring-Retaining
24	3256-56	5	Washer-Flat
25	3296-39	1	Nut-Lock, NI
26	92-9216	1	Pulley-Drive, Input
27	92-9218	1	V-Belt (Matched Set)
28	65-8270	1	Washer
29	33114-025	1	Screw-HH

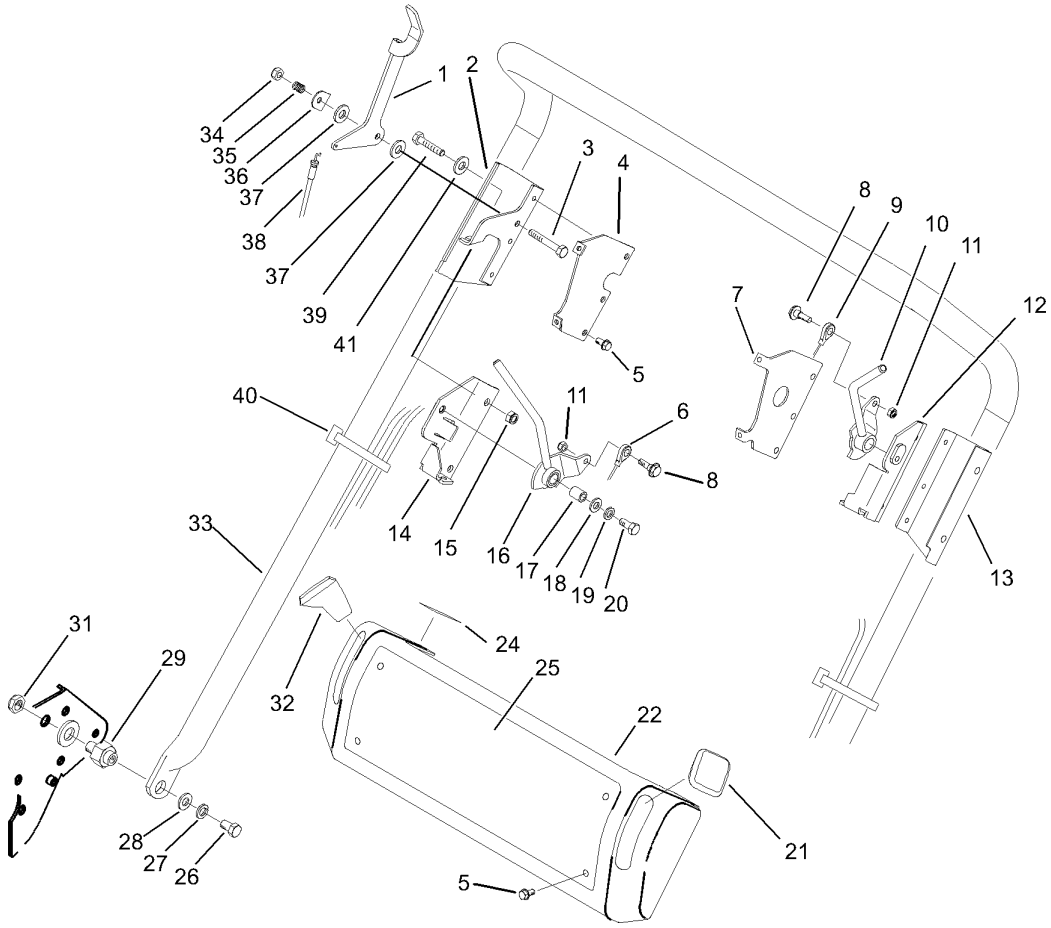

Handle and Control Assembly

Ref	Part No.	Qty.	Description
1	93-6017	1	Lever-Throttle
2	95-0908-03	1	Bracket-Clutch, Skid
3	321-8	1	Screw-HH
4	93-6046-03	1	Bracket-Console, RH
5	93-6083	10	Screw-HWH
6	94-5870	1	Cable Clutch ASM
7	93-6047-03	1	Bracket-Console, LH
8	11-9030	2	Screw-Shoulder
9	94-5871	1	Cable Brake ASM
10	106-5348	1	Brake Lever ASM
11	3296-42	2	Nut-Lock, NI
12	93-6022	1	Bracket-Brake
13	95-0907-03	1	Bracket-Brake, Skid
14	93-6019	1	Bracket
15	3296-29	4	Nut-Lock, NI
16	106-5347	1	Clutch Lever ASM
17	47-4701	2	Bushing-Bronze
18	3256-71	2	Washer-Flat
19	3254-2	2	Washer-Lock, Int
20	3210-7	2	Screw-HH
21	65-8971	1	Knob-Shift
22	93-6036	1	Cover-Console
24	93-6085	1	Decal-Throttle
25	105-5361	1	Decal-Console

Ref	Part No.	Qty.	Description
26	323-34	2	Screw-HH
27	3253-21	2	Washer-Lock
28	3256-24	2	Washer-Flat
29	93-6000	2	Pin-Pivot, Handle
30	94-5868	2	Washer
31	3296-28	2	Nut-Lock, NI
32	65-8970	1	Knob-Shift
33	93-9044	1	Handle
34	3296-56	1	Nut-Lock, NI
35	3-5787	1	Spring-Compression
36	93-6016	1	Washer-Retaining
37	66-2921	2	Washer-Friction
38	94-5869	1	Throttle Cable ASM
39	322-9	4	Screw-HH
40	3290-378	2	Tie-Cable
41	3256-23	4	Washer-Flat

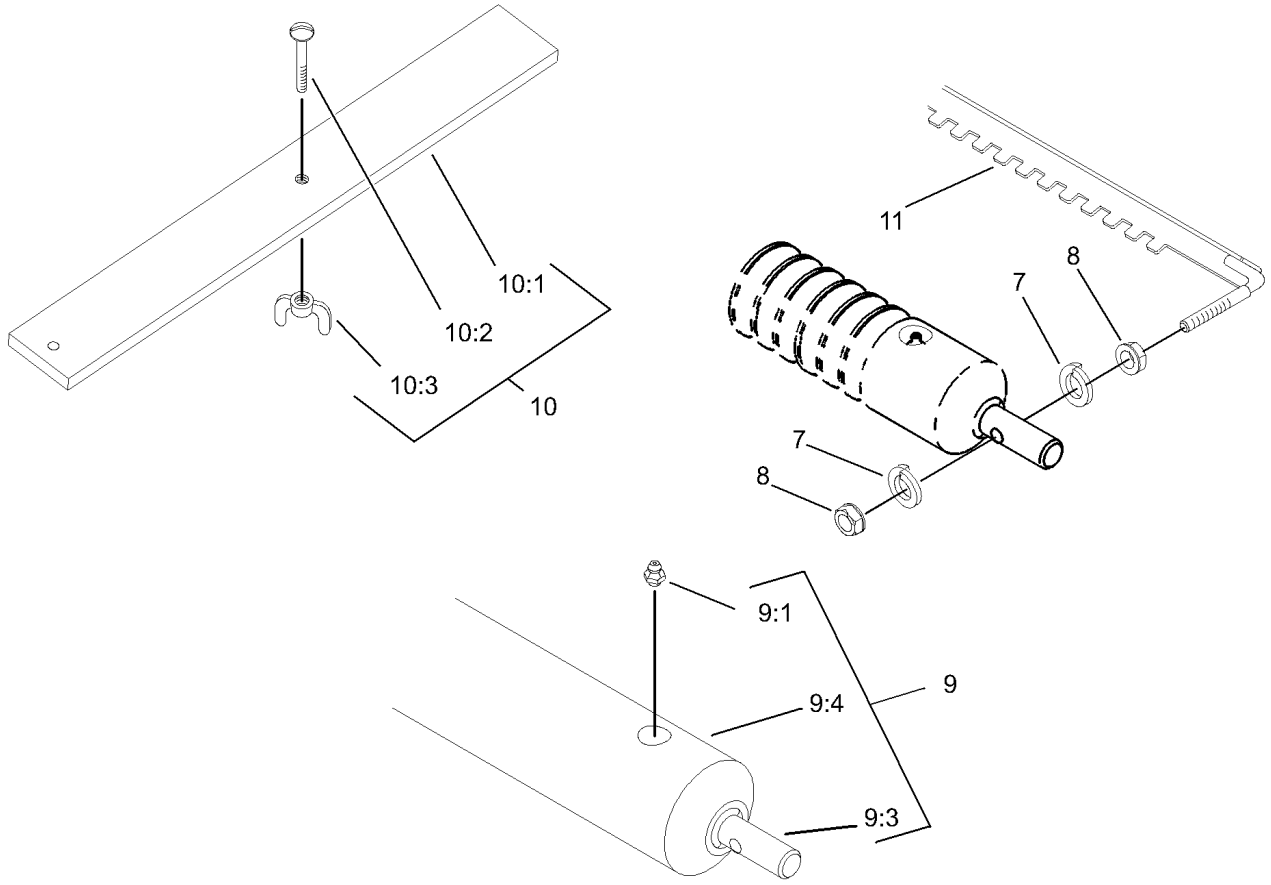

Roller and Height-of-Cut Bar Assembly

Ref	Part No.	Qty.	Description
7	3254-8	4	Washer-Lock
8	3219-1	4	Nut-Hex
9	95-0930	1	Full Roller ASM
9:1	302-5	2	Fitting-Grease
9:3	52-3180	2	Bearing-Roller, Front
9:4	95-0918	1	Roller Tube ASM
10	94-9010	1	HOC Bar ASM
10:1	94-9011	1	Bar-HOC
10:2	32122-36	1	Screw
10:3	32103-2	1	Nut-Wing
11	94-9012-01	1	Scraper-Wiehle

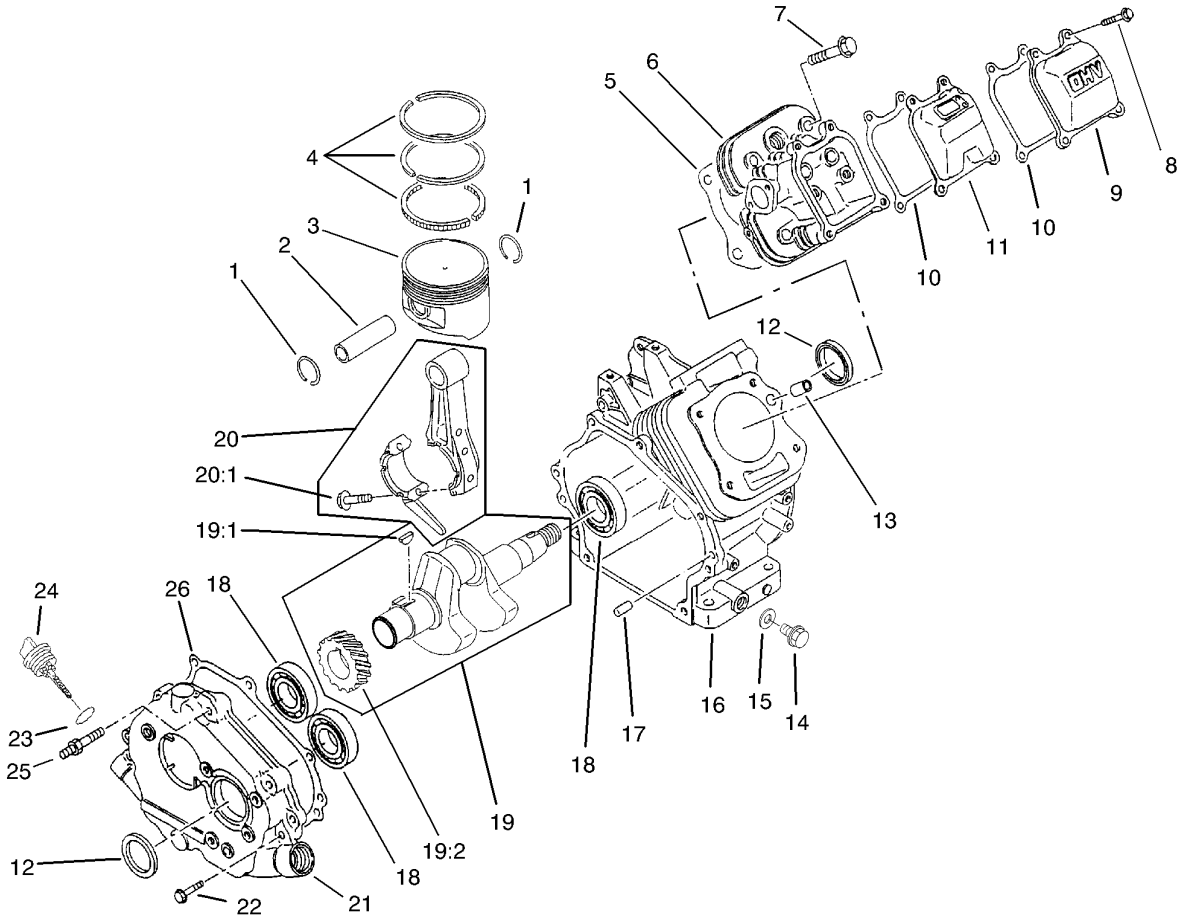

Crankcase Assembly

Ref	Part No.	Qty.	Description
1	93-8500	2	Ring-Retaining
2	93-8501	1	Pin-Piston
3	93-8502	1	Piston
3	94-6836	1	Piston-0.5 O/s
4	93-8503	1	Set-Ring, Piston
4	94-6837	1	Set-Ring, Piston (.05mm)
5	93-8504	1	Gasket-Head
6	93-8505	1	Head-Cylinder
7	93-8506	4	Bolt-Flanged
8	94-6838	4	Bolt-Flanged
9	93-8508	1	Case-Rocker
10	93-8509	2	Gasket-Rocker
11	93-8510	1	Breather
12	93-8511	2	Seal-Oil
13	93-8512	2	Pin
14	93-8513	2	Plug-Drain
15	93-8514	2	Gasket-Plug, Drain
16	93-8515	1	Crankcase
17	93-8516	2	Pin
18	93-8517	2	Bearing-Ball
19	93-8518	1	Crankshaft ASM
19:1	93-8526	1	Key
19:2	94-9043	1	Gear-Helical
20	93-8528	1	Connecting Rod ASM

Ref	Part No.	Qty.	Description
20:1	93-8527	2	Bolt-Rod
21	93-8520	1	Cover-Crankcase
22	93-8521	7	Bolt-Flanged
23	94-9041	2	O-Ring
24	93-8523	2	Cap-Filter, Oil
25	93-8524	1	Stud
26	93-8525	1	Gasket-Crankcase

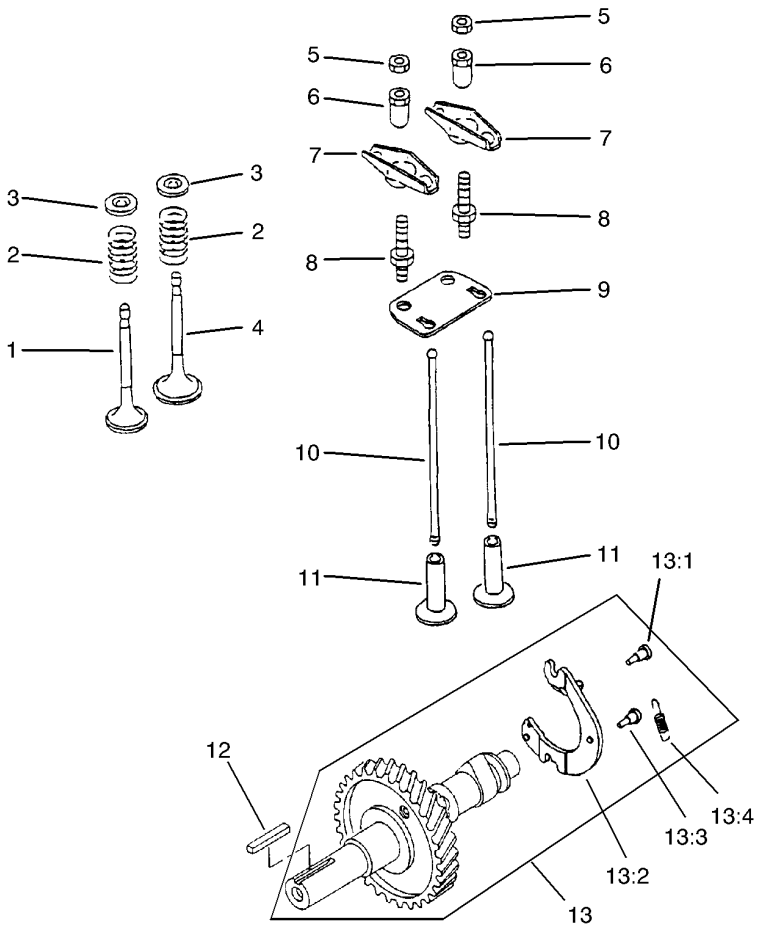

Camshaft and Valve Assembly

Ref	Part No.	Qty.	Description
1	93-8529	1	Valve-Exhaust
2	93-8530	2	Spring-Valve
3	93-8531	2	Retainer-Spring
4	93-8532	1	Valve-Intake
5	93-8533	2	Nut
6	93-8534	2	Nut
7	93-8535	2	Arm-Rocker
8	93-8536	2	Bolt
9	93-8537	1	Guide
10	93-8538	2	Rod-Push
11	93-8539	2	Tappet
12	93-8545	1	Key
13	93-8544	1	Camshaft ASM
13:1	93-8540	1	Pin
13:2	93-8543	1	Decompressor
13:3	93-8542	1	Pin
13:4	93-8541	1	Spring

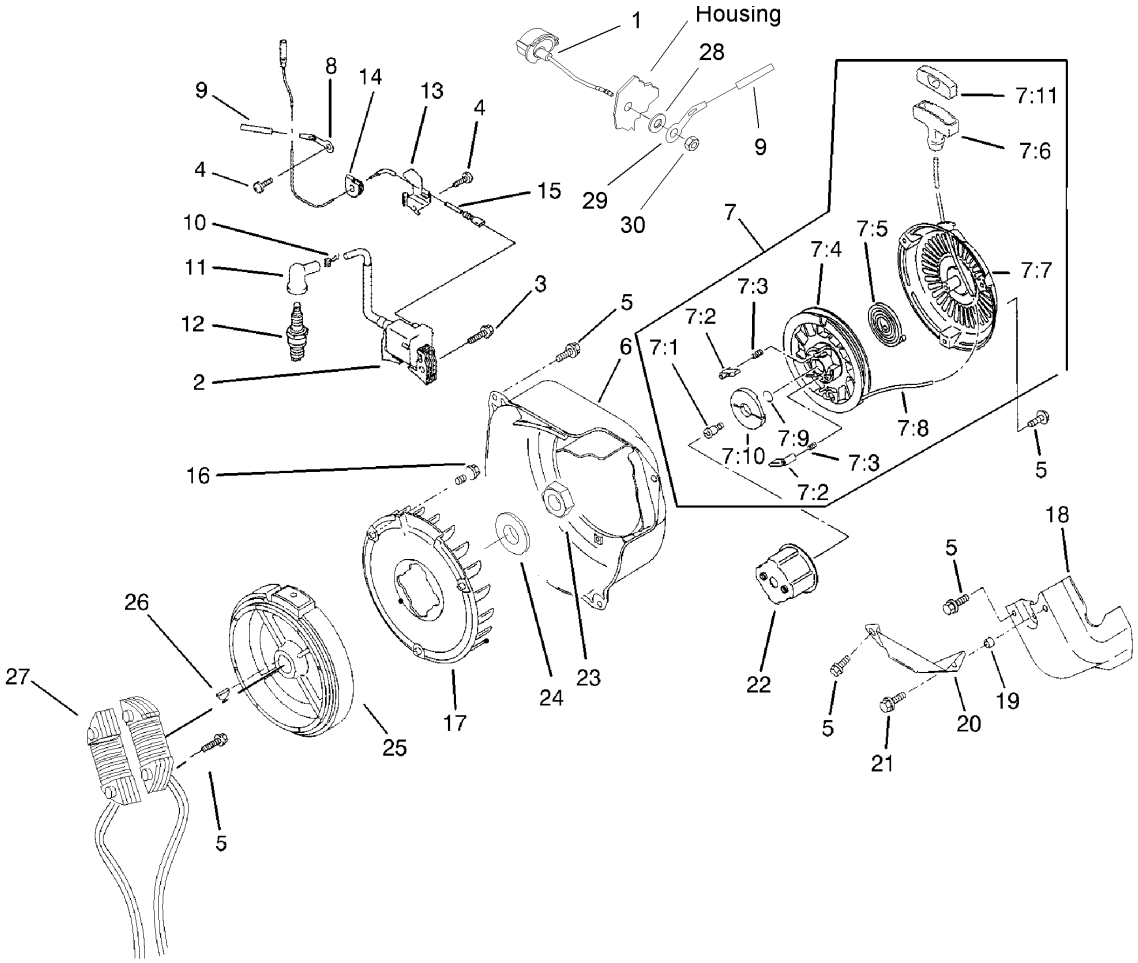

Ignition Assembly

Ref	Part No.	Qty.	Description
1	107-7606	1	Switch Assembly, Sealed
2	94-9031	1	Ignition Coil ASM
3	93-8548	6	Bolt-Flanged
4	93-8549	2	Screw
5	93-8550	10	Bolt-Flanged
6	107-7607	1	Housing-Fan
7	93-8552	1	Recoil Starter ASM
7:1	93-8553	1	Screw
7:2	93-8554	2	Pawl-Recoil
7:3	93-8555	2	Spring-Return
7:4	93-8556	1	Reel-Recoil
7:5	93-8557	1	Spring
7:6	94-9045	1	Grip-Starter, Recoil
7:7	94-9046	1	Case-Recoil
7:8	93-8560	1	Rope
7:9	93-8561	1	Ring-Retaining
7:10	93-8562	1	Guide-Pawl
7:11	94-9044	1	Cap-Grip
8	94-9039	1	Clamp
9	94-9040	2	Tube
10	94-9049	1	Spring-Terminal
11	93-8585	1	Cap-Plug, Spark
12	93-8584	1	Spark Plug
13	93-8583	1	Clamp

Ref	Part No.	Qty.	Description
14	107-7608	1	Grommet
15	94-9038	1	Wire-Lead
16	94-6840	3	Bolt-Flanged
17	93-8572	1	Fan
18	93-8563	1	Shroud-Engine
19	93-8564	1	Collar
20	93-8565	1	Shroud-Engine
21	93-8566	1	Bolt-Flanged
22	93-8567	1	Pulley-Recoil
23	93-8568	1	Nut
24	93-8569	1	Washer
25	99-6237	1	Flywheel ASM
26	93-8571	1	Key
27	99-4267	1	Coil-Lighting
28	33094-00	1	Washer-Flat
29	107-7609	1	Clamp
30	33014-00	1	Nut-Hex

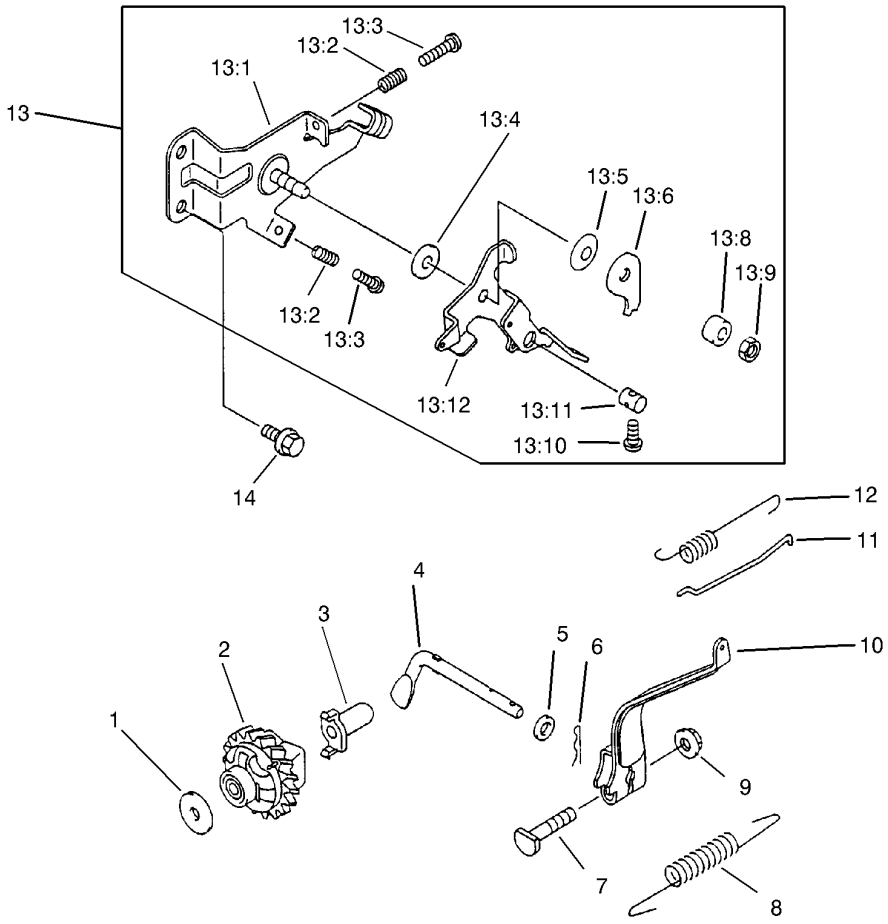

Governor Assembly

Ref	Part No.	Qty.	Description
1	94-6842	1	Washer
2	94-6841	1	Governor ASM
3	93-8610	1	Sleeve
4	93-8609	1	Arm-Pivot
5	93-8608	1	Washer
6	93-8607	1	Pin-Snap
7	93-8606	1	Bolt
8	94-9030	1	Spring-Governor
9	93-8631	1	Nut
10	93-8603	1	Arm-Governor
11	93-8602	1	Rod-Governor
12	93-8601	1	Spring
13	93-8599	1	Control ASM
13:1	93-8587	1	Bracket
13:2	93-8588	2	Spring
13:3	93-8589	2	Bolt
13:4	93-8590	1	Washer
13:5	93-8591	1	Spring
13:6	93-8592	1	Plate
13:8	93-8594	1	Spacer
13:9	93-8595	1	Nut
13:10	93-8596	1	Screw-Head, Pan
13:11	93-8597	1	Nut
13:12	93-8598	1	Lever

Ref	Part No.	Qty.	Description
14	93-8600	2	Bolt-Flanged

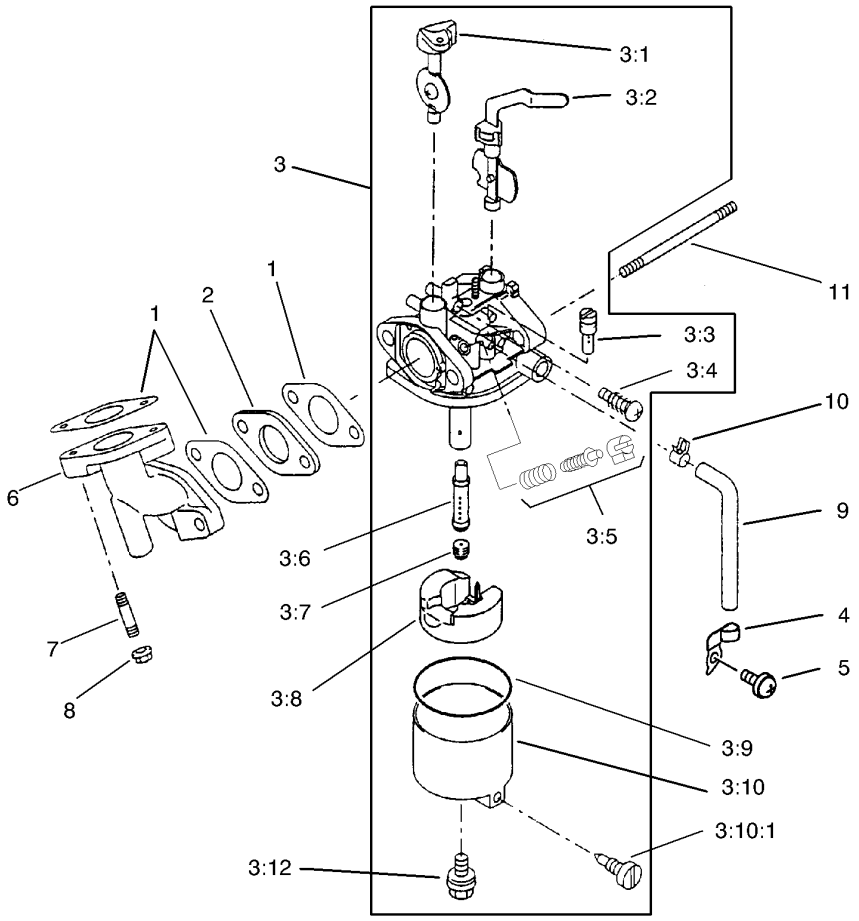

Carburetor Assembly

Ref	Part No.	Qty.	Description
1	93-8613	3	Gasket
2	94-9048	1	Insulator
3	94-9032	1	Carburetor ASM
3:1	94-9033	1	Throttle Valve ASM
3:2	93-8617	1	Valve-Choke
3:3	94-9037	1	Jet-Pilot, #40
3:4	93-8619	1	Screw ASM
3:5	94-9034	1	Limiter
3:6	94-9035	1	Nozzle-Main
3:7	94-9036	1	Jet-Main, #65
3:7	98-8735	1	Jet-Main, #62 High Alt
3:7	98-8736	1	Jet-Main, #60 High Alt
3:8	94-6844	1	Float ASM
3:9	93-8624	1	Gasket
3:10	93-8625	1	Float Chamber ASM
3:10:1	93-8626	1	Screw ASM
3:12	93-8627	1	Bolt
4	94-6846	1	Clamp
5	94-6845	1	Screw
6	93-8633	1	Pipe-Intake
7	93-8632	2	Bolt-Stud
8	93-8631	2	Nut
9	93-8630	1	Tube
10	93-8629	1	Clamp

Ref	Part No.	Qty.	Description
11	93-8628	2	Bolt-Stud

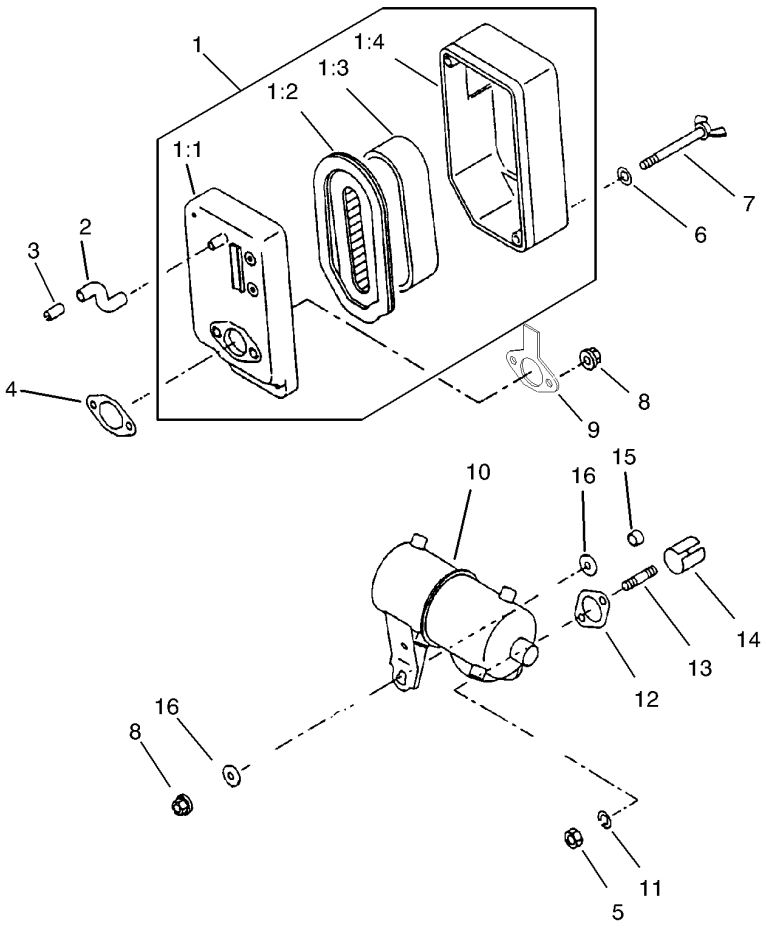

Air Cleaner and Muffler Assembly

Ref	Part No.	Qty.	Description
1	93-8634	1	Air Filter ASM
1:1	93-8635	1	Case Filter ASM
1:2	93-8636	1	Element-Filter, Air
1:3	93-8637	1	Element-Filter, Air
1:4	93-8638	1	Cap-Filter, Air
2	93-8659	1	Tube
3	93-8658	1	Pipe
4	93-8657	1	Gasket-Filter, Air
5	93-8656	2	Nut-Hex
6	93-8639	2	Washer
7	93-8640	2	Bolt
8	93-8631	3	Nut
9	93-8642	1	Plate-Filter, Air
10	98-3427	1	Muffler
11	93-8655	2	Washer-Spring
12	93-8654	1	Gasket-Muffler
13	94-6848	2	Bolt-Stud
14	93-8652	1	Pipe-Exhaust
15	93-8651	1	Collar
16	93-8650	2	Washer

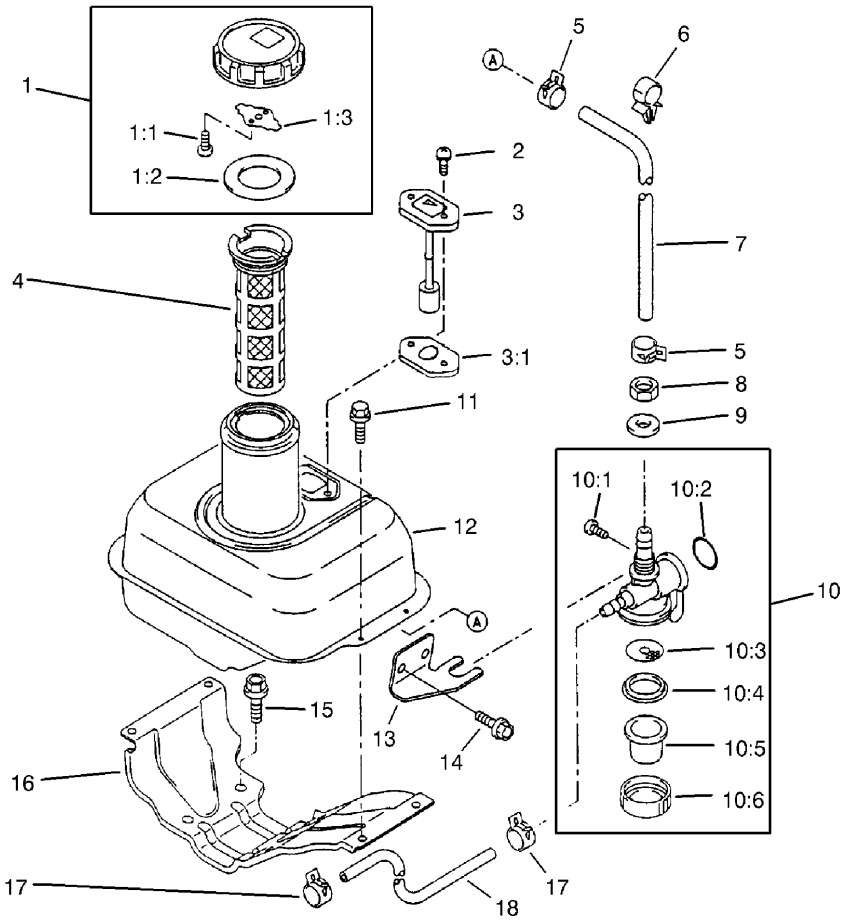

Fuel Tank Assembly

Ref	Part No.	Qty.	Description
1	93-8660	1	Fuel Cap ASM
1:1	93-8661	2	Screw
1:2	93-8662	1	Gasket
1:3	93-8663	1	Spring
2	93-8686	2	Screw
3	93-8685	1	Gauge-Fuel
3:1	104-2384	1	Gasket-Gauge, Fuel
4	94-6826	1	Filter-Fuel
5	93-8664	2	Clamp
6	93-8665	1	Clamp
7	93-8666	1	Tube
8	94-9042	1	Nut
9	93-8668	1	Washer
10	93-8669	1	TAP ASM
10:1	93-8670	1	Screw
10:2	93-8671	1	O-Ring
10:3	94-6849	1	Filter-TAP
10:4	93-8673	1	Gasket
10:5	93-8674	1	Cup-TAP
10:6	93-8675	1	Nut
11	94-6838	4	Bolt-Flanged
12	104-2382	1	Tank-Fuel
13	93-8681	1	Bracket
14	93-8680	2	Bolt-Flanged

Ref	Part No.	Qty.	Description
15	94-6825	4	Bolt-Flanged
16	104-2383	1	Bracket-Tank
17	93-8676	2	Clamp
18	93-8677	1	Tube

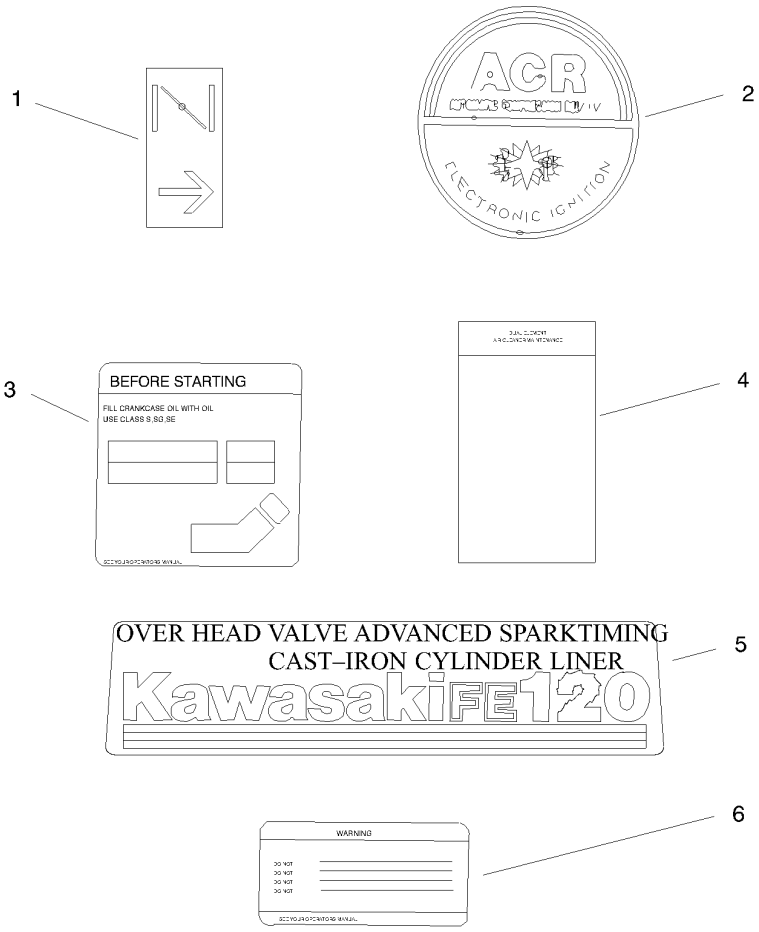

Decals

Ref	Part No.	Qty.	Description
1	93-8687	1	Decal-Choke
2	94-9027	1	Label-Recoil
3	93-8689	1	Decal-Instructions
4	93-8690	1	Decal-Maintenance
5	94-9028	1	Label-Kawasaki
6	93-8692	1	Decal-Warning

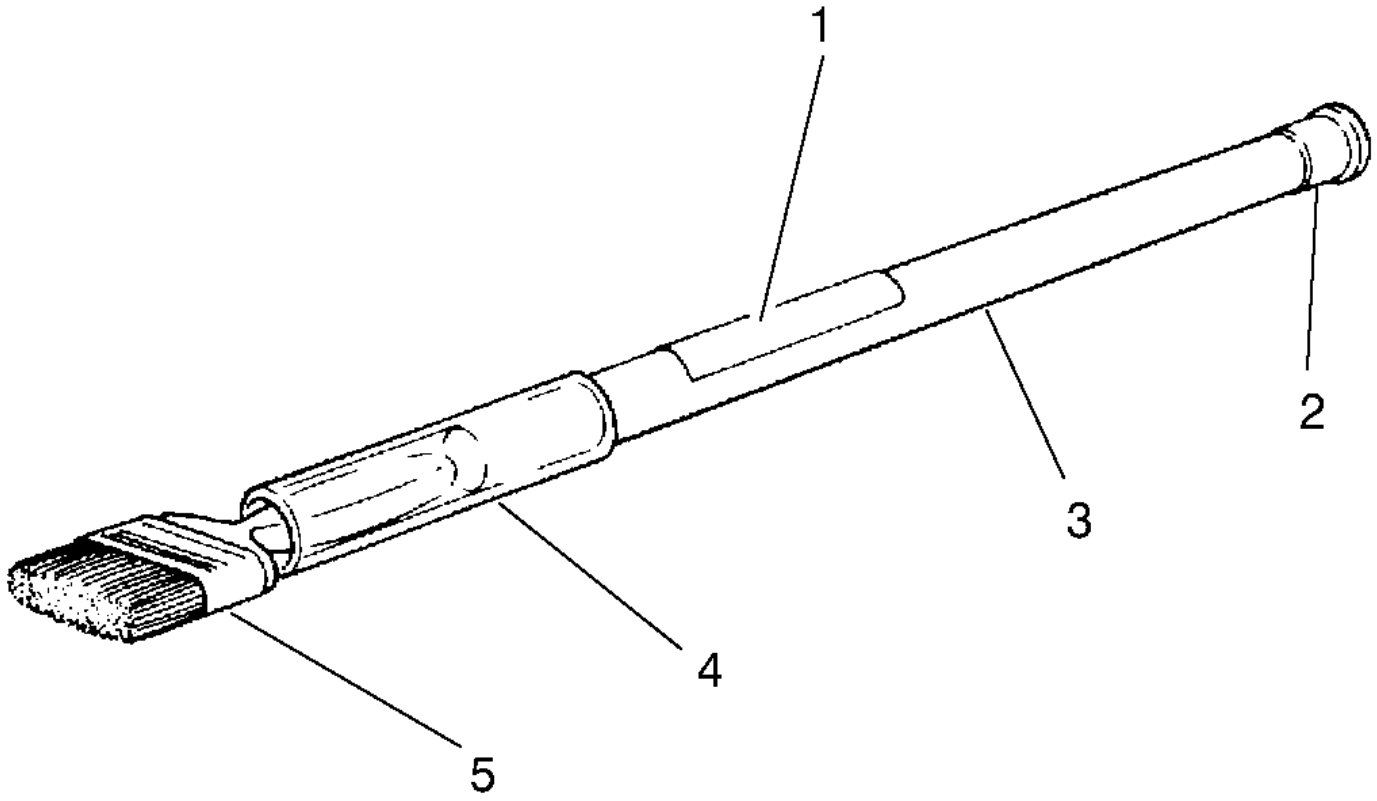

Special Tools Backlapping Brush Assembly No. *TOR299100

Ref	Part No.	Qty.	Description
❸1	12-9140	1	Decal-Body, Front
❸2	2410-18	1	Cap-Plastic
❸3	29-9080	1	Handle
❸4	29-9090	1	Hose Handle
❸5	36-4310	1	Brush

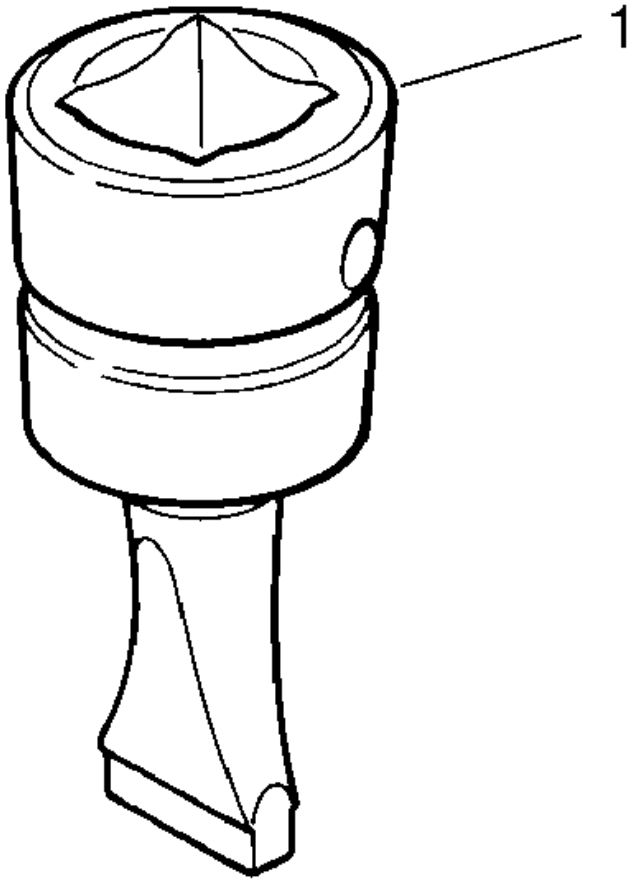

Special Tool - Bedknife Screw Tool No. *TOR510880

Ref	Part No.	Qty.	Description
❸1		1	Tooi-Bedknife, Screw

NOTES


TORO®