Form No. 3351–335

Conversion Kit

Z200 to Z500 DFS Bagger

Part No. 107–7650

Installation Instructions

Loose Parts

Note: Use the chart below to identify parts for assembly.

Step	Description	Qty.	Use
1	No parts needed	–	Removing the bagger arm
2	Stop plate	1	Installing the stop plate
3	Bagger arm	1	Installing the bagger arm
4	Foam grip	2	Installing the latch lever
5	Cable Long clevis, liquid cooled machines only Short clevis Clevis pin Cotter pin	1 1 1 1 1	Installing the new cable
6	No parts needed	–	Adjusting the bagger arm
7	Pulley Plate Bearing housing Key Bolt, 3/8 x 5/8 inch Spring washer, 3/8 inch	2 1 1 2 2 2	Installing the drive pulley assembly
8	Tensioner bracket template Eyebolt template	1 1	Drilling holes for the idler bracket and the eyebolt
9	Tensioner bracket	1	Installing the tensioner bracket and the eyebolt
10	No parts needed	–	Installing the bagger tensioner assembly and the belt
11	No parts needed	–	Adjusting the bagger belt

© 2004 by The Toro Company
8111 Lyndale Avenue South
Bloomington, MN 55420-1196

Contact us at www.Toro.com
All Rights Reserved
Printed in the USA

Step	Description	Qty.	Use
12	No parts needed	–	Installing and adjusting the mower belt
13	Middle tube	1	Installing hardware onto a new middle tube
14	Mounting plate	1	Installing the existing boot and brackets to the new mounting plate
15	Boot Middle tube Flexible tube Clamp	1 1 1 1	Installing the boot and discharge tubes
16	Weight U–Bolt, 3/8 X 6 inch Lock nut, 3/8 inch Washer, 3/8 inch Spacer	1 2 4 4 4	Installing the weight

Step 1

Removing the Existing Bagger Arm

Parts needed for this step:

None

Procedure

1. Remove the shoulder bolt and cable from the bagger arm (Fig. 1).

2. Loosen the nut and pulley on the bagger and remove the cable from the pulley (Fig. 1).

3. Remove the cable from the bagger door hinge (Fig. 1). Save all the hardware.

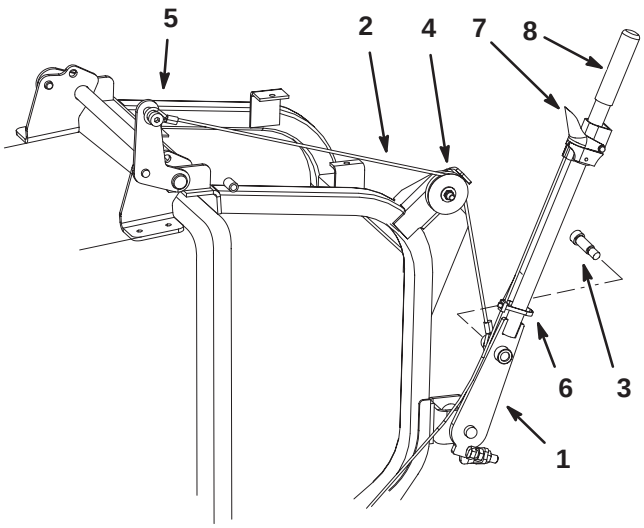

m–6136

Figure 1

1. Bagger arm
2. Cable
3. Shoulder bolt
4. Pulley and nut
5. Bagger door hinge
6. Cable tie
7. Latch lever
8. Grip

4. Loosen the setscrew holding the latch lever (Fig. 6).

5. Remove the plastic cable ties on the handle and slide the latch lever down the handle (Fig. 1).

6. Remove the grip from the bagger arm (Fig. 3).

7. Remove the cotter pin and washer from the bagger arm (Fig. 2). Save the washer and cotter pin.

8. Slide the bagger arm and washer out from the bagger frame (Fig. 2). Save the washer.

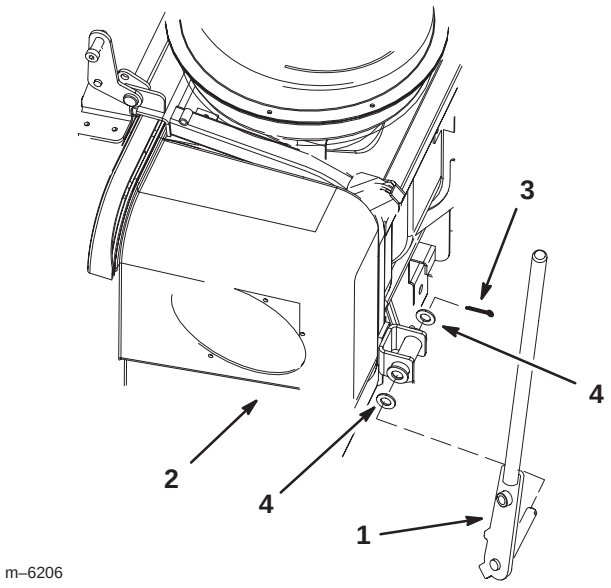

Figure 2

1. Bagger arm
2. Bagger
3. Cotter pin
4. Washer

9. Remove the latch lever off of the bagger arm and discard the the bagger arm (Fig. 3).

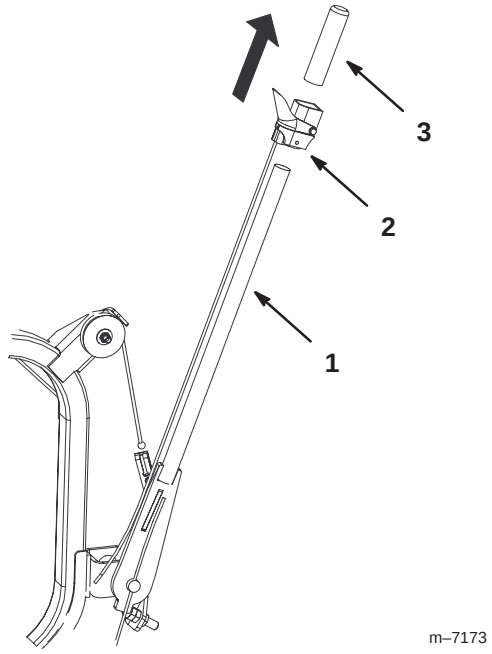

Figure 3

1. Bagger Arm
2. Latch lever
3. Foam grip

Step 2

Installing the Stop Plate

Parts needed for this step:

Qty.	Part
1	Stop plate

Procedure

1. Remove the existing stop bolt and jam nuts from the bagger frame (Fig. 4).

2. Install the stop plate to the stop bracket using the bolt and jam nut previously removed (Fig. 4). Do not tighten.

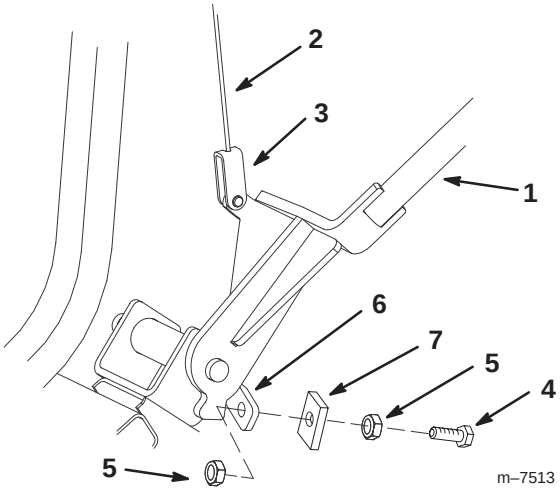

Figure 4

1. Bagger dump lever
2. Bagger cable
3. Bagger cable clevis
4. Bolt, 1/2 x 1–3/4 inch
5. Jam nut, 1/2 inch
6. Stop bracket
7. Stop plate

Step 3

Installing the Bagger Arm

Parts needed for this step:

Qty.	Part
1	Bagger arm

Procedure

1. Install the latch lever onto the bagger arm.
2. Install 1 washer previously removed onto the bagger arm pivot and install the bagger dump handle into the bagger frame (Fig. 5).
3. Secure the bagger handle with the previously removed washer and cotter pin (Fig. 5).

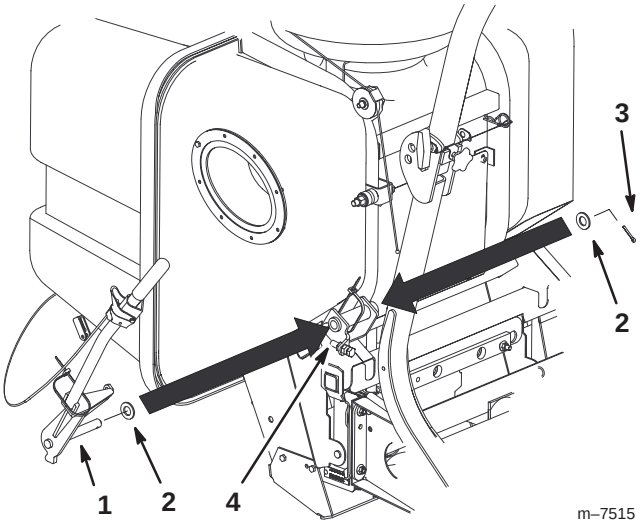

Figure 5

1. Bagger arm pivot
2. Washer
3. Cotter pin
4. Bagger frame

Step 4

Installing the Latch Lever

Parts needed for this step:

Qty.	Part
1	Foam grip

Procedure

1. Position the latch lever 6 inches (15.2 cm) down from the end of the bagger arm. See Figure 6.

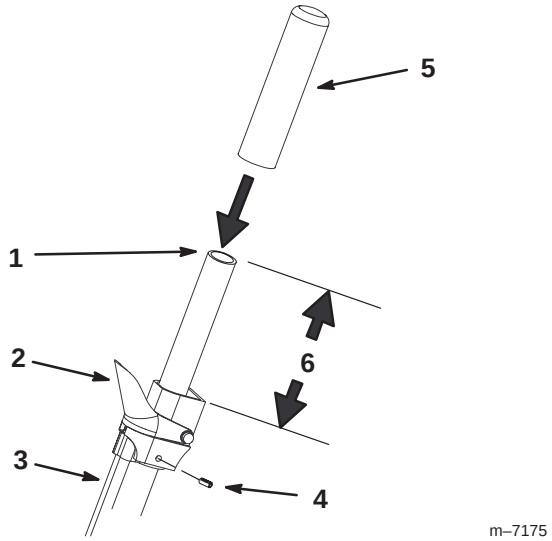

Figure 6

1. Bagger arm end
2. Latch lever position
3. Latch lever cable
4. Set screw
5. Foam grip
6. 6 inches (15.2 cm)

2. Position the latch lever at the 10 o'clock position when looking at the end of the handle (Fig. 7).

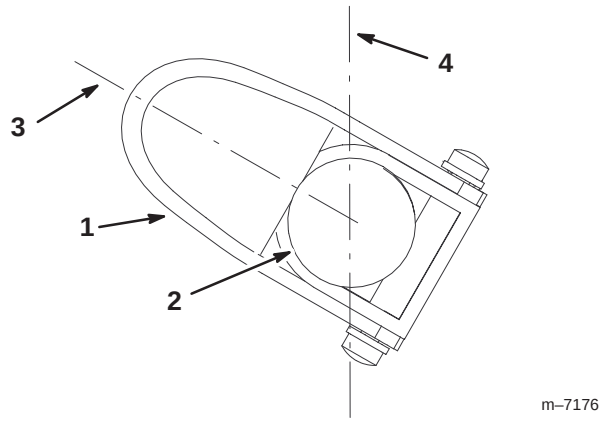

Figure 7

End view of handle

1. Latch lever
2. End of handle
3. 10 o'clock position
4. 12 o'clock position

3. Tighten the setscrew that holds the latch lever (Fig. 6).

4. Install the cable ties (Fig. 9).

5. Install the foam grip onto the bagger arm (Fig. 6).

Step 5

Installing the New Cable

Parts needed for this step:

Qty.	Part
1	Cable
1	Long clevis, liquid cooled machines only
1	Short clevis
1	Clevis pin
1	Cotter pin

Procedure

1. Install the new cable to the top of the bagger with the previously removed shoulder bolt, washer and nut (Fig. 8).

2. Install the cable into the pulley and tighten the nut (Fig. 8).

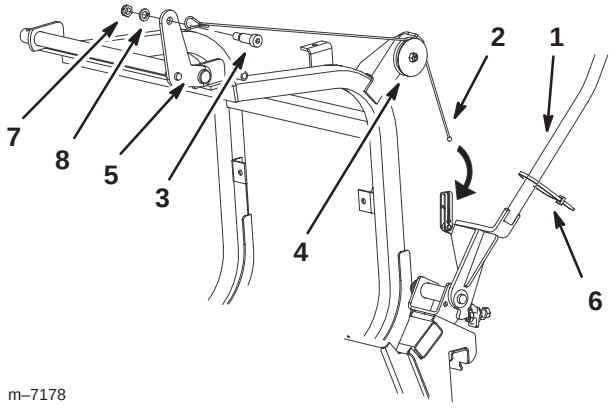

Figure 8

1. Bagger arm
2. Cable
3. Shoulder bolt
4. Pulley and nut
5. Bagger door hinge
6. Cable tie
7. Nut
8. Washer

Note: Install the long cable clevis onto the bagger dump handle if it is for a liquid cooled machine (Fig. 9).

3. Secure the bagger cable clevis to the bagger arm with the clevis pin and cotter pin (Fig. 9).

4. Install the cable into the cable clevis installed on the bagger handle (Fig. 9).

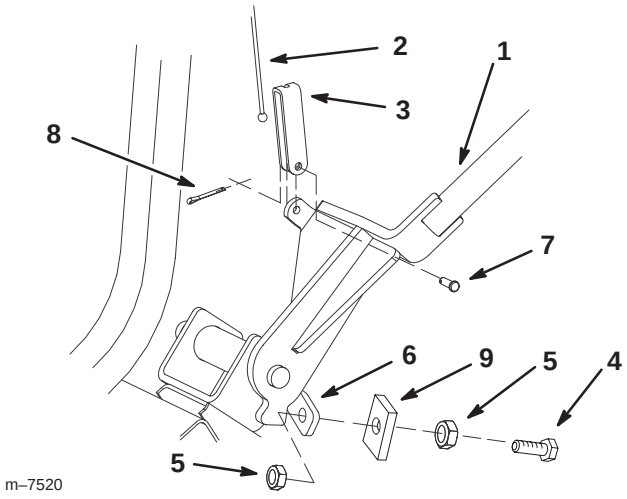

Figure 9

1. Bagger dump lever
2. Bagger cable
3. Long cable clevis—liquid cooled machines only
4. Bolt, 1/2 x 1–3/4 inch
5. Jam nut, 1/2 inch
6. Stop bracket
7. Clevis pin
8. Cotter pin
9. Stop plate

5. Adjust the handle stop, refer to Adjusting the Bagger Arm, page 6.

Step 6

Adjusting the Bagger Arm

Parts needed for this step:

None

Procedure

The bagger arm needs to be adjusted to remove slack in the bagger cable with the bagger door closed.

1. Loosen the nuts on both sides of the stop bracket (Fig. 10).
2. Adjust the stop bolt until there is **no** slack in the bagger cable (Fig. 10).
3. Tighten the nuts on both sides of the stop bracket (Fig. 10).

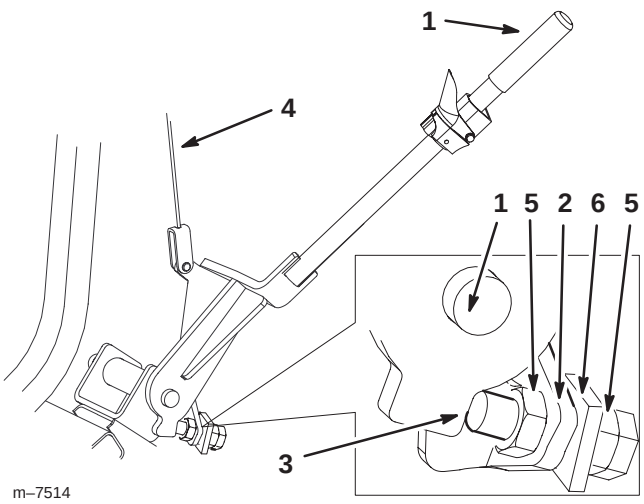

Figure 10

1. Bagger dump lever
2. Stop bracket
3. Stop bolt
4. Bagger cable
5. Nut
6. Stop plate

Step 7

Installing the Drive Pulley Assembly

Parts needed for this step:

Qty.	Part
2	Pulley
1	Plate
1	Bearing housing
2	Bolt, 3/8 x 5/8 inch
2	Spring washer, 3/8 inch
2	Key

Procedure

1. Remove the existing drive belts from the machine (Fig. 21).
2. Remove the existing drive pulley assembly from the machine (Fig. 11).

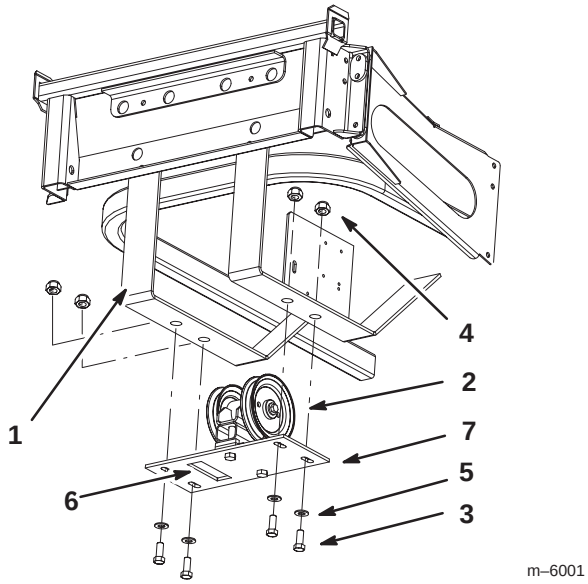

Figure 11

1. Rear frame
2. Drive pulley assembly
3. Bolt, 1/2 x 1–1/4 inch
4. Nut, 1/2 inch
5. Washer, 1/2 inch
6. Cut–out
7. Pulley plate

3. Remove the pulleys from the existing assembly.

4. Remove the plate from the existing bearing housing.

5. Install the new bearing housing and existing spacers to the new plate (Fig. 12).

Note: Install the new small pulley nearest the cutout in the plate (Fig. 12).

6. Install the new pulleys to the bearing housing with 2 bolts (3/8 x 5/8 inch), 2 spring washer (3/8 inch) and 2 keys (Fig. 12).

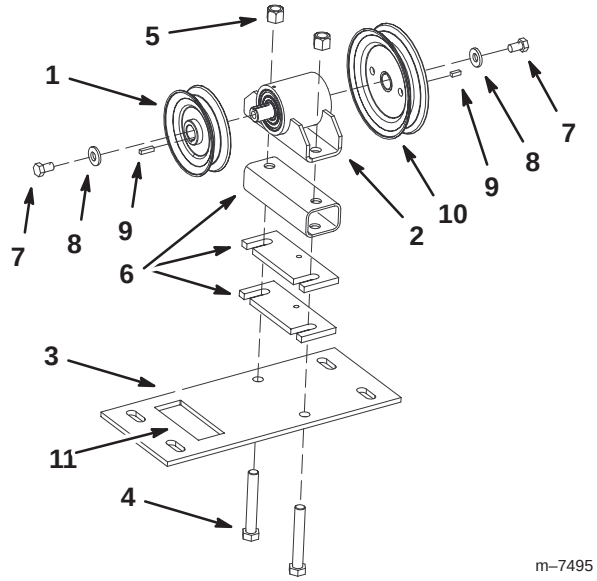

Figure 12

1. New small pulley
2. New bearing housing
3. New plate
4. Bolt
5. Nut
6. Spacer
7. Bolt, 3/8 x 5/8 inch
8. Spring washer, 3/8 inch
9. Key
10. New large pulley
11. Cut–out

7. Install the mower belt onto the drive pulley assembly (Figures 13 and 21).

Note: Make sure the cut–out in the pulley plate is on the left–hand side of the machine (Fig. 11). This cut–out allows room for the mower spring loaded idler pulley.

8. Install the pulley assembly under the rear frame, and loosely install 4 bolts (1/2 x 1–1/4 inch), 4 washers (1/2 in.) and 4 locknuts (1/2 inch) (Fig. 11). **Do not tighten bolts now.**

Positioning the Drive Pulley Assembly on an Air Cooled Machine

1. Push the drive pulley assembly all the way forward and then rearward a 1/4 inch (6 mm) (Fig. 11).

Note: The bolt head on the drive pulley assembly, should be approximately centered horizontally, in the frame slot (Fig. 13). View this from the right–hand side of the machine.

2. Tighten the 4 bolts (1/2 x 1–1/4 inch), 4 washers (1/2 in.) and 4 locknuts (1/2 inch) (Fig. 11).

Important A final adjustment may be needed when installing the bagger belt.

Positioning the Drive Pulley Assembly on a Liquid Cooled Machine

1. Pull the drive pulley assembly all the way rearward and then forward a 1/4 inch (6 mm) (Fig. 11).

Note: The bolt head on the drive pulley assembly, should be approximately a 1/4 inch (6mm) rearward of the center in the frame slot (Fig. 13). View this from the right–hand side of the machine.

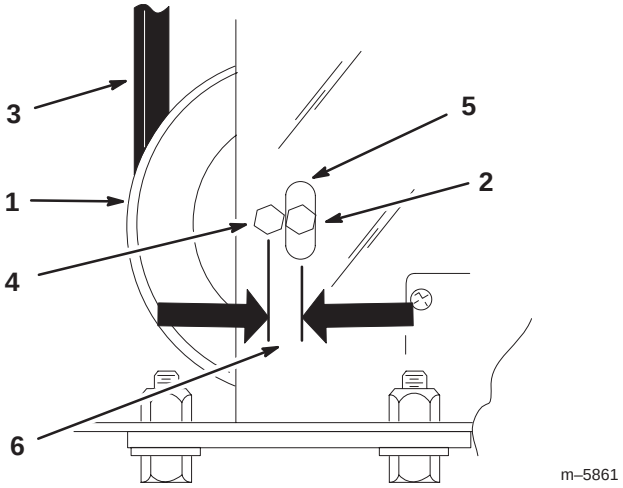

Figure 13

1. Drive pulley assembly
2. Bolt head—air cooled machine only
3. Mower drive belt
4. Bolt head—liquid cooled machine only
5. Frame slot
6. 1/4 inch—liquid cooled

2. Tighten the 4 bolts (1/2 x 1–1/4 inch), 4 washers (1/2 in.) and 4 locknuts (1/2 inch) (Fig. 11).

Important A final adjustment may be needed when installing the bagger belt.

Step 8

Drilling Holes for the Tensioner Bracket and Eyebolt

Parts needed for this step:

Qty.	Part
1	Tensioner bracket template
1	Eyebolt template

Procedure

1. Remove the four bolts in the skid plate (Fig. 14).
2. Remove the skid plate (Fig. 14). This will make it easier to remove and install the hardware and belts.

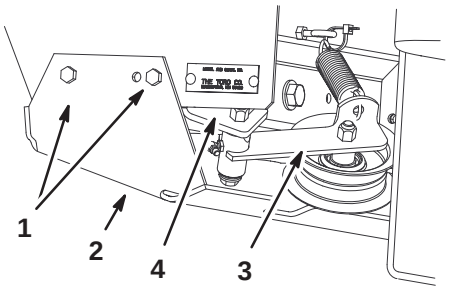

Figure 14

1. Bolts
2. Skid plate
3. Bagger tensioner assembly
4. Existing tensioner bracket

3. Remove the existing bagger tensioner assembly from the tensioner bracket (Fig. 14). Save the hardware.
4. Remove the existing tensioner bracket and eyebolt from the bagger frame. Save the hardware.
5. Place the tensioner bracket template flush against the wall and bottom of the bagger bracket and tight against the side of the bagger bracket (Fig. 15).

6. Align the eyebolt template with the existing hole in the bagger frame (Fig. 15).

Note: Make sure the templates are tight against the bagger frame (Fig. 15).

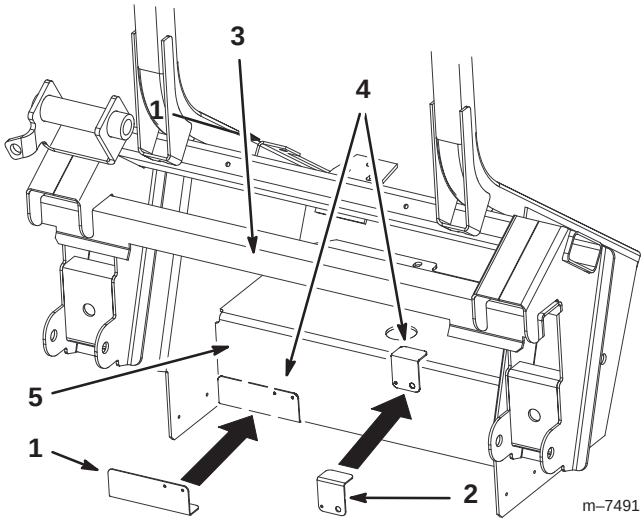

Figure 15

1. Tensioner bracket template
2. Eyebolt template
3. Bagger frame
4. Correct template position
5. Bagger wall

7. Using the templates, mark and center punch the holes.

8. Drill three 1/8 inch pilot holes into the frame (Fig. 16).

9. Remove the templates and discard them.

10. Drill 2 holes, 11/32 inch diameter, into the 1/8 inch pilot holes from the tensioner bracket template (Fig. 16).

11. Drill 1 hole, 9/32 inch diameter, into the 1/8 inch pilot holes from the eyebolt template (Fig. 16).

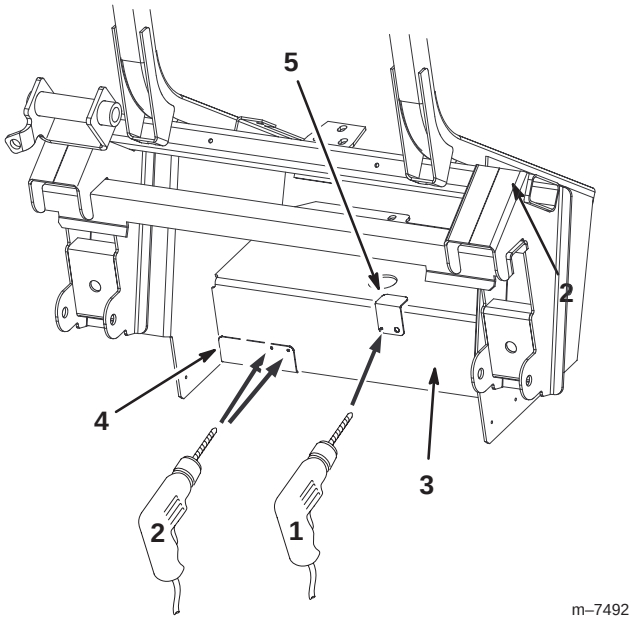

Figure 16

1. 9/32 inch hole to drill
2. 11/32 inch holes to drill
3. Bagger frame
4. Tensioner bracket template
5. Eyebolt template

Step
9

Installing the Tensioner Bracket and Eyebolt

Parts needed for this step:

Qty.	Part
1	Tensioner bracket

Procedure

1. Install the tensioner bracket to the bagger frame with the previously removed nuts (Fig. 14).

2. Install the previously removed eyebolt with the previously removed nuts (Fig. 14).

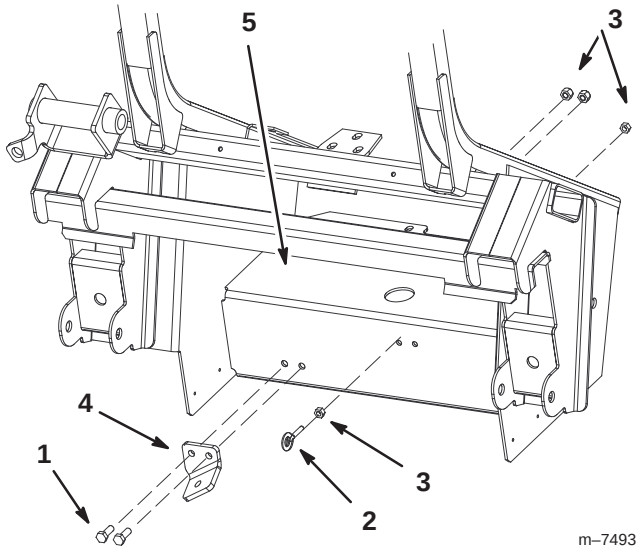

Figure 17

1. Bolt
2. Eyebolt
3. Nut
4. New tensioner bracket
5. Bagger frame

Step
10

Installing the Bagger Tensioner Assembly and Belt

Parts needed for this step:

None

Procedure

1. Install the bagger tensioner assembly to the tensioner bracket with with the previously removed bolt, washers and lock nut (Fig. 18).

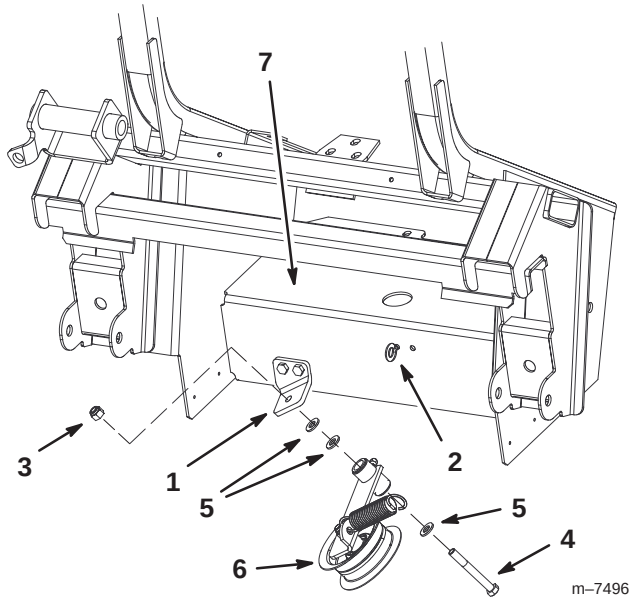

Figure 18

1. Bagger tensioner bracket
2. Eyebolt
3. Lock nut
4. Bolt
5. Washer
6. Bagger tensioner assembly
7. Bagger frame

2. Install the bagger belt onto the drive pulley (Fig. 20 and 21).

3. Route the bagger belt onto the bagger pulley (Figures 19 and 20).

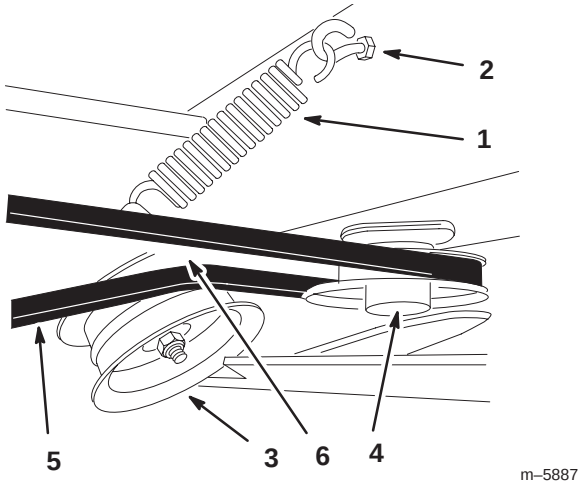

Figure 19

1. Tensioner spring
2. Eye bolt
3. Bagger tensioner pulley
4. Bagger pulley
5. Belt
6. Shortest space between belt strands, 1 inch ±1/8 inch

Note: There should be a 1/4 twist in the belt when it is installed onto the bagger tensioner pulley

4. Install the spring onto the idler arm (Fig. 19).

5. Install the tensioner spring onto the eyebolt attached to the bagger (Fig. 19 and 22).

6. Adjust the bagger belt for proper tension. Refer to Adjusting the Bagger Belt on page 11.

7. Adjust the Mower belt tension. Refer to Adjusting the Mower Belt Tension on page 12.

8. Install the skid plate (Fig. 14).

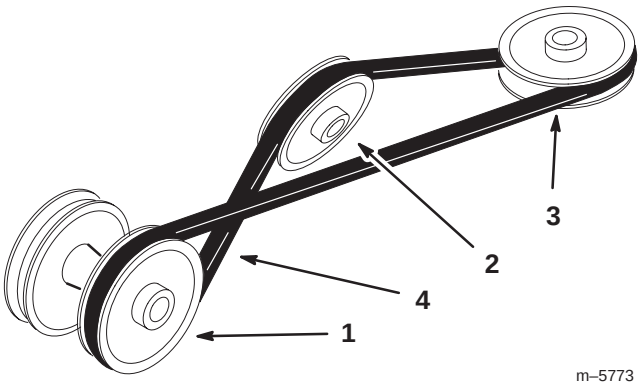

Figure 20

1. Drive pulley
2. Bagger tensioner pulley
3. Bagger pulley
4. 1/4 twist

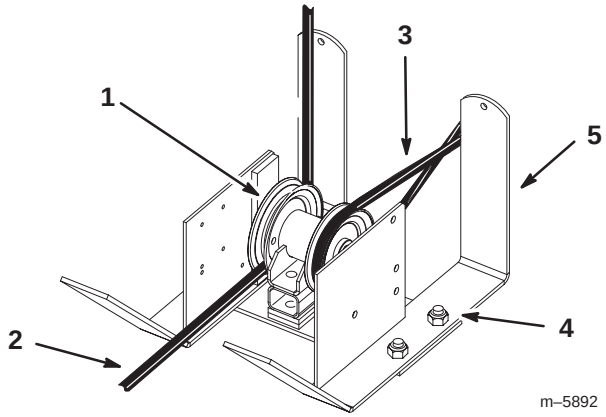

Figure 21

1. Drive pulley assembly
2. Mower belt
3. Bagger belt
4. Mounting bolts
5. Back of machine

Step 11

Adjusting the Bagger Belt

Parts needed for this step:

None

Procedure

1. Check the belt tension (Fig 22).

2. Measure the gap at the bagger tensioner pulley, between the tight and slack side of the belt when the bagger tensioner pulley and spring are installed (Fig. 22).

3. There must be a gap of 1 inch ± 1/8 inch (26mm ± 3 mm) between the belt strands (Fig 22).

4. If the gap is not correct, remove the tensioner spring from the eyebolt to remove the tension on the PTO spring loaded idler (Fig 22).

5. Loosen the 4 mounting bolts holding the drive pulley assembly (Fig 21).

6. If the gap measurement is too small, push the pulley assembly forward slightly [1/8–3/16 inch (3–5 mm)] from the original set–up position (Fig 21).

7. If the gap measurement is too large, pull the pulley assembly rearward slightly [1/8–3/16 inch (3–5 mm)] from the original set–up position (Fig 21).

8. Tighten the 4 mounting bolts holding the drive pulley assembly to the machine frame (Fig 21).

9. Install the tensioner spring to the eyebolt to apply tension on the PTO spring loaded idler.

10. Measure the bagger belt spacing. There must be a gap of 1 inch ± 1/8 inch (26mm ± 3 mm) between the belt strands (Fig 22).

11. Repeat this procedure if a gap of 1 inch ± 1/8 inch (26mm ± 3 mm) was not achieved (Fig 22).

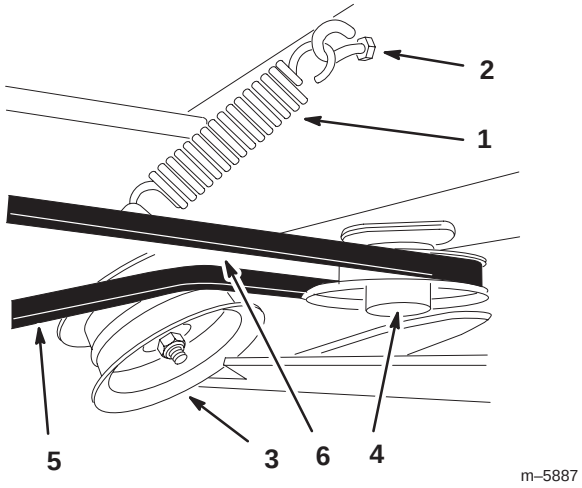

Figure 22

1. Tensioner spring
2. Eye bolt
3. Bagger tensioner pulley
4. Bagger pulley
5. Belt
6. Shortest space between belt strands, 1 inch ±1/8 inch

Step 12

Installing and Adjusting the Mower Belt

Parts needed for this step:

None

Procedure

1. Disengage the PTO, move the motion control levers to the neutral locked position and set the parking brake.

2. Stop the engine, remove the key, and wait for all moving parts to stop before leaving the operating position.

3. Raise the mower to the transport position.

4. Ensure the mower belt is installed on all mower pulleys (Fig 23).

Important Check the amount of twist in the belt between the pulleys. Make sure it is only what is specified in Figure 23.

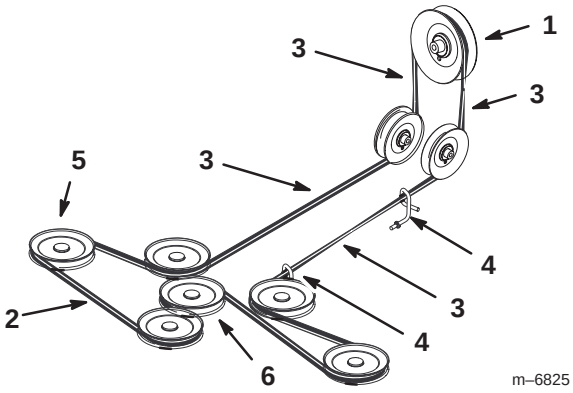

Figure 23

1. Clutch
2. Mower belt
3. 1/4 turn belt twist
4. Belt guide
5. Mower spindle pulley
6. Mower idler pulley

Important Check and make sure the belt is installed into both the front and rear belt guides (Fig 24).

5. Check the belt tension. The spring loaded idler center bolt needs to be near the top alignment hole in the left support plate (Fig 24).

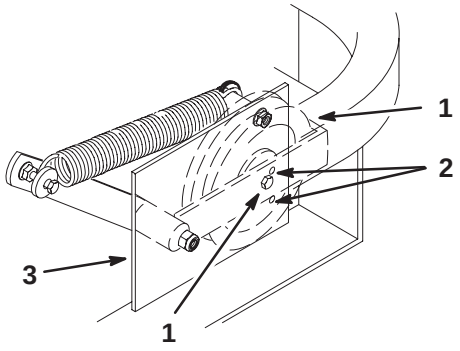

Figure 24

1. Center bolt
2. Alignment hole
3. Left support plate
4. Spring loaded idler

6. If adjustment is required, loosen the mower idler plate to adjust it (Fig. 25).

7. Insert a ratchet or breaker bar into the square hole in the mower idler plate to adjust the tension (Fig. 25).

8. To increase belt tension, rotate the mower idler plate until resistance is felt and rotation stops. Do not go past when it stops (Fig. 25).

9. Tighten the idler plate bolts (Fig. 25).

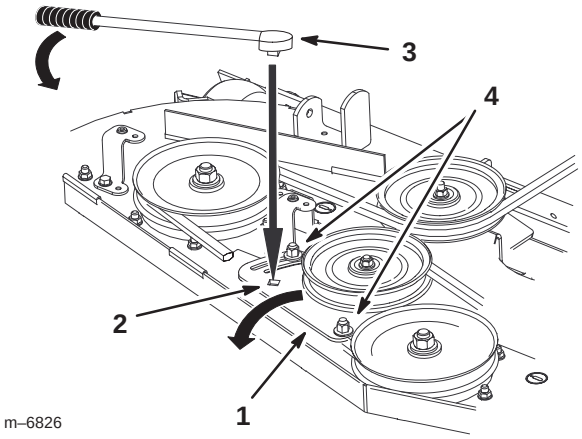

Figure 25

1. Mower idler plate
2. Square hole
3. Ratchet or breaker bar
4. Idler plate bolt

Step
13

Installing Hardware onto the New Middle Tube

Parts needed for this step:

Qty.	Part
1	Middle tube

Procedure

1. Remove the rubber latch, mounting bracket and the hardware from the existing middle tube.

2. Install the rubber latch, mounting bracket to the new middle tube with the existing hardware (Fig. 26).

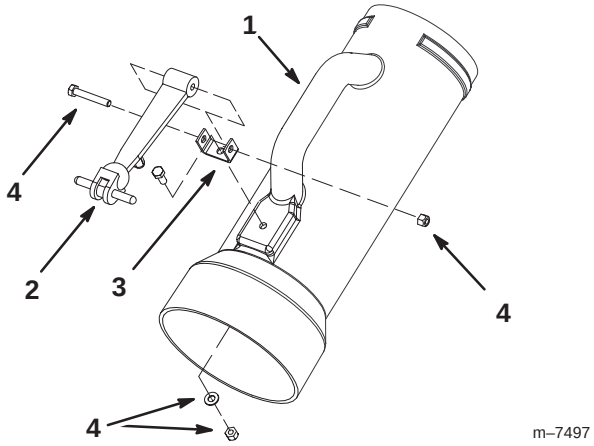

Figure 26

1. Middle tube
2. Existing rubber latch
3. Existing mounting bracket
4. Hardware

Step 14

Installing the Existing Boot and Brackets to the New Mounting Plate

Parts needed for this step:

Qty.	Part
1	Mounting plate

Procedure

1. Remove the existing mounting plate from the boot. Save the hardware.
2. Remove the existing mounting bracket and bracket clamp from the existing mounting plate. Save the hardware.
3. Install the existing mounting bracket and bracket clamp to the new mounting plate (Fig. 27).

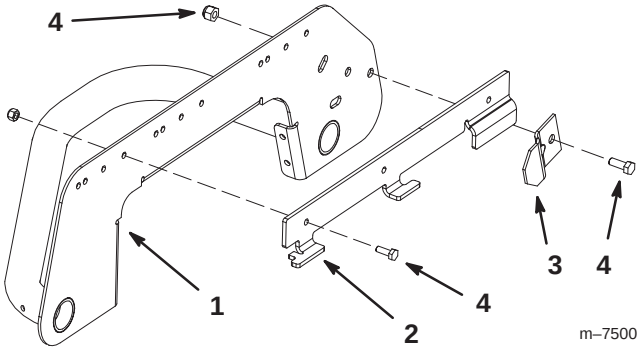

Figure 27

1. New mounting plate
2. Existing mounting bracket
3. Existing bracket clamp
4. Existing hardware

4. Install the boot to the new mounting plate with exiting hardware (Fig. 28).

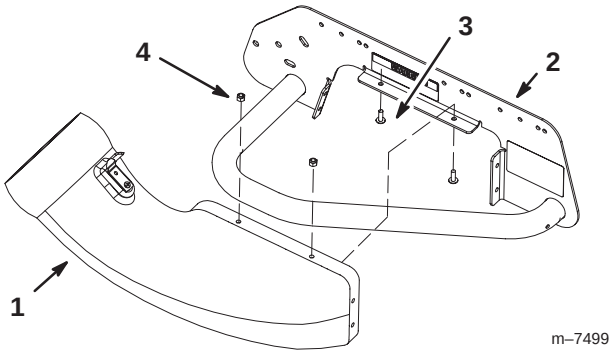

Figure 28

1. Boot
2. New mounting plate
3. Existing bolt
4. Existing nut

Step 15

Installing the Boot and Discharge Tubes

Parts needed for this step:

Qty.	Part
1	Upper flexible tube
1	Middle tube
1	Boot
1	Clamp

Procedure

Note: Remember to replace the **L** or the straight end of the spring when in side discharge mode.

1. Disengage the PTO and set the parking brake.
2. Stop the engine, remove the key, and wait for all moving parts to stop before leaving the operating position.

3. To relieve the spring tension on the grass deflector, place the **L** or the straight end of the spring in front of the mounting bracket (Fig. 29).
4. Lift the grass deflector all the way back.
5. Position the boot's front hook into the front slot on the mounting bracket (Fig. 30).

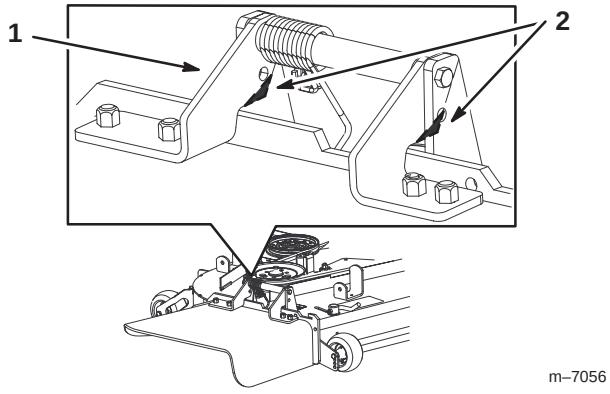

Figure 29

1. Grass deflector frame
2. Grind this part off

6. Place the rear hook over the rear of the mounting bracket (Fig. 30).
7. Install the upper flexible tube into the bagger (Fig. 30).
8. Slide the clamp onto the upper flexible tube (Fig. 30).
9. Slide the middle tube into the upper tube (Fig. 30).
10. Tighten the clamp around the upper and middle tube connection (Fig. 30).
11. Slide the middle tube onto the boot and latch them together (Fig. 30).
12. Adjust the flow baffle in the mower to match the opening of the boot. Refer to your mower *Operator's Manual*.

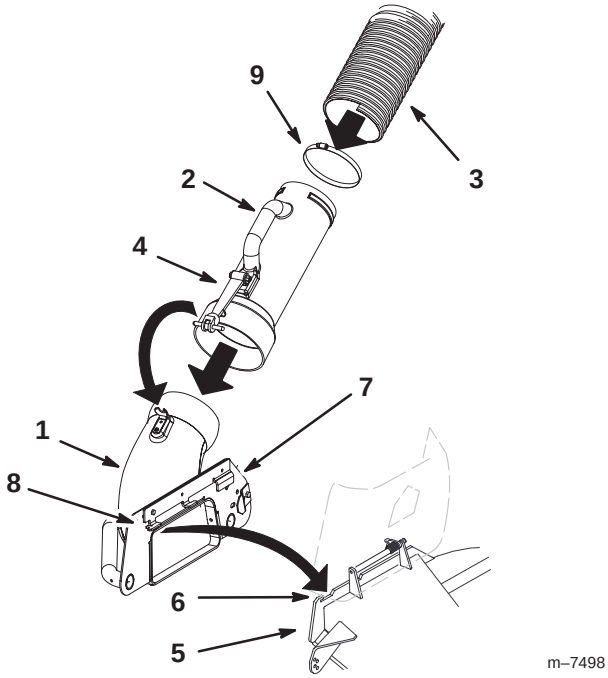

Figure 30

1. Boot
2. Middle tube
3. Upper flexible tube
4. Latch
5. Mounting bracket
6. Front slot
7. Rear hook
8. Front hook
9. Clamp

Step
16

Installing the Weight

Parts needed for this step:

Qty.	Part
1	Weight
2	U–Bolt, 3/8 X 6 inch
4	Lock nut, 3/8 inch
4	Washer, 3/8 inch
4	Spacer

Procedure

1. Raise the foot pan and then remove the footrest from the machine (Fig. 31).

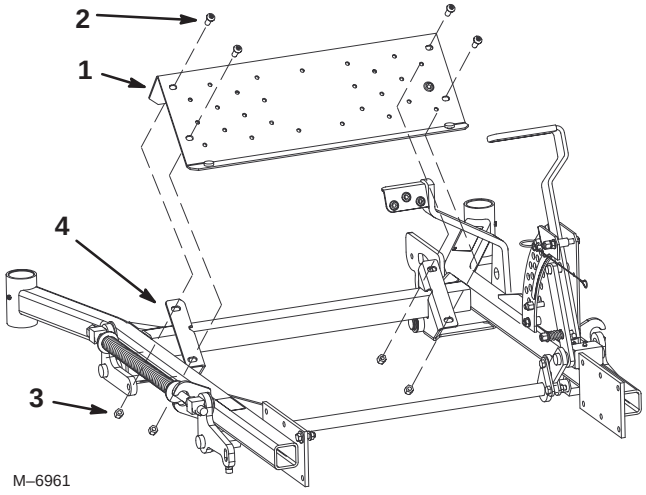

Figure 31

1. Footrest
2. Bolt
3. Nut
4. Machine frame

2. Install the single weight plate onto the machine frame with 2 U–bolts (3/8 x 6 inch), 2 spacers, 2 washers (3/8 inch), and 2 nuts (3/8 inch) (Fig. 32).

3. Install the footrest onto the machine and lower the footpan (Fig. 31).

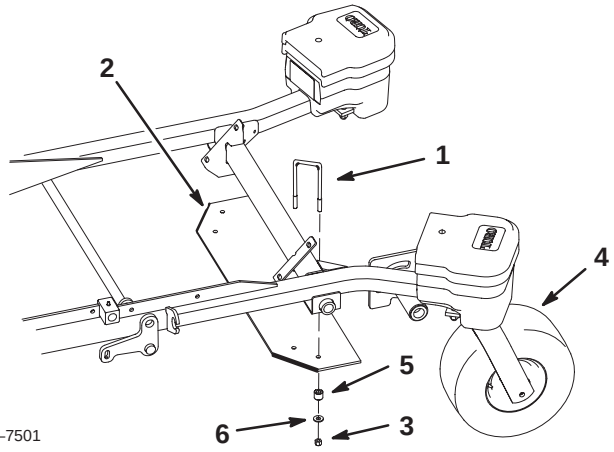

Figure 32

1. U–bolt
2. Single weight plate
3. Lock nut, 3/8 inch
4. Front caster
5. Spacer
6. Washer, 3/8 inch