1985

FORM NO. 3312-593

TORO

MODEL NO. 20675-5000001 & Up

PARTS CATALOG

21" S.P. REAR BAGGER

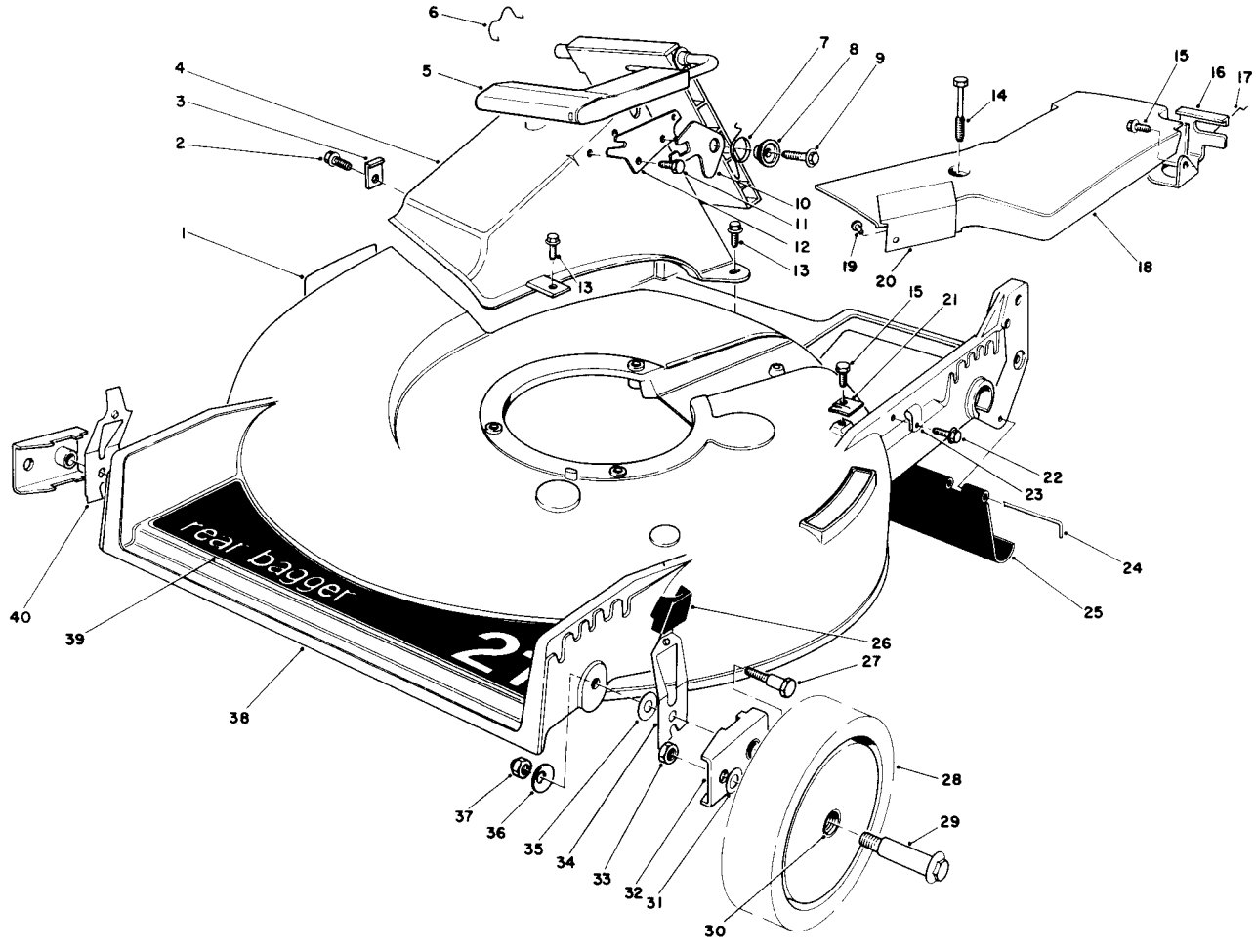

HOUSING ASSEMBLY

Ref. No.	Part No.	Description	No. Used
1	39-5770	Decal — Danger	1
2	12-3270	Screw — Thread Forming, Hex. Washer Hd.	1
3	47-6540	Clip — Tunnel	1
4	46-3500	Tunnel — Discharge	1
5	51-0200	Discharge Door Assembly	1
6	47-5840	Retainer — Door	1
7	33-4860	Spring — Torsion	1
8	43-4840	Spacer — Latch	1
9	46-8091	Screw — Self Tapping, Hex. Washer Hd.	1
10	42-4010	Latch — Door	1
11	46-8090	Screw — Self Tapping, Hex. Washer Hd.	1

Ref. No.	Part No.	Description	No. Used
12	23-1040	Plate — Latch	1
13	46-6811	Screw w/Washer	3
14	37-7260	Capscrew — Special	2
15	32144-11	Screw — Thread Forming, Hex. Washer Hd.	2
16	46-5870	Bracket — Traction Adjustment	1
17	46-7030	Retainer — Cable	1
18	52-7400	Belt Cover Assembly (Incl. Ref. #19 & 20)	1
19	3295-35	Rivet	2
20	38-8730	Shield — Heat	1
21	46-5610	Clamp — Cable	1
22	12-5450	Screw — Self Tapping, Slotted Hex. Hd.	1

©The Toro Company — 1985

PRICE $1.00

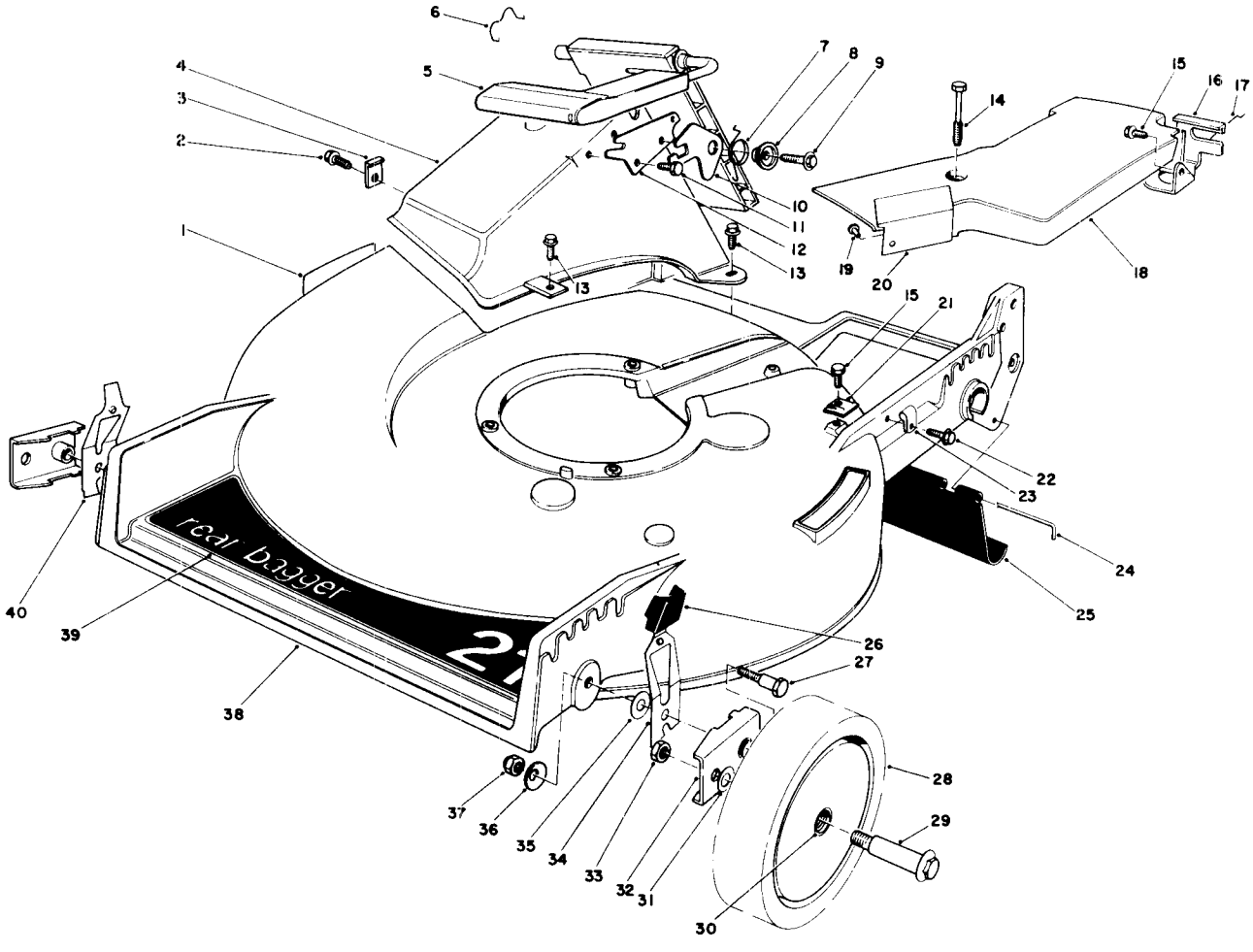

HOUSING ASSEMBLY (Continued)

Ref. No.	Part No.	Description	No. Used
23	2412-83	R Clamp	1
24	33-3208	Rod — Shield	1
25	44-0580	Shield — Rear	1
26	25-7740	Knob — Spring Arm	2
27	44-5270	Screw — Pivot	2
28	11-9509	Wheel & Tire Assembly (Incl. Ref. #30)	2
29	27-6231	Bolt — Wheel	2
30	27-6250	Bushing	4
31	40-1940	Washer — Wheel	2

Ref. No.	Part No.	Description	No. Used
32	47-2940	Arm — Pivot	2
33	3296-6	Locknut	2
34	52-7480	Spring Arm Assembly — L.H.	2
35	5-4460	Washer — Pivot	2
36	3290-456	Washer — Bellville	2
37	3296-29	Locknut	2
38	11-4089	Housing (Incl. Ref. #1)	1
39	44-0450	Decal — 21" Rear Bagger	1
40	52-7490	Spring Arm Assembly — R.H.	1

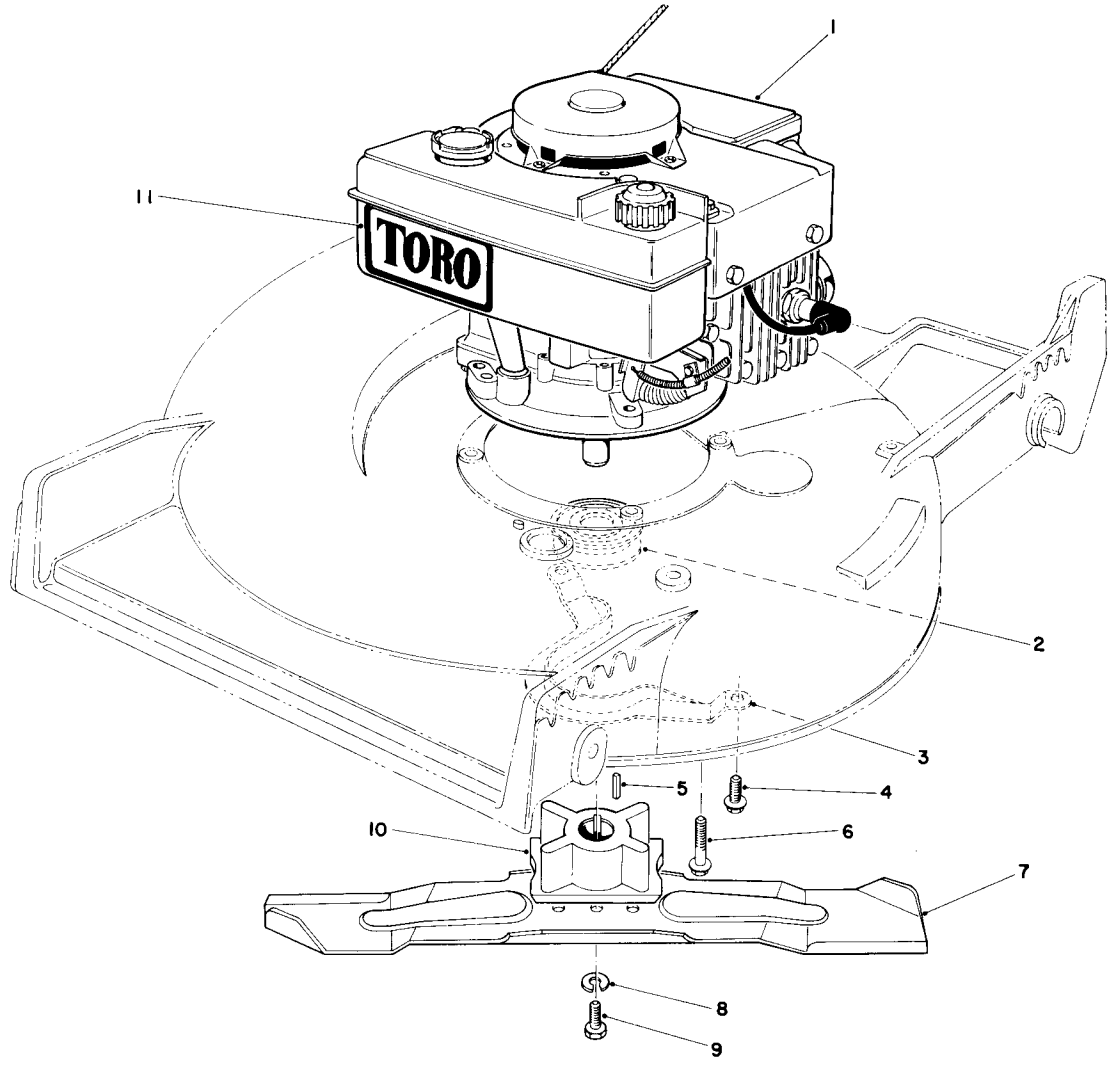

Ref. No.	Part No.	Description	No. Used
1	221-764	Engine	1
2	23-0130	Pulley — Driver	1
3	40-5720	Guide — Belt	1
4	11-9760	Screw — Thread Forming	2
5	7-0036	Key — Square	1
6	11-0581	Screw — Thread Forming	3

Ref. No.	Part No.	Description	No. Used
7	42-1000	Blade — 21"	1
8	26-0670	Screw — Blade	1
9	3253-22	Lockwasher	1
10	46-3490	Retainer — Blade	1
11	44-0510	Decal — Toro	1

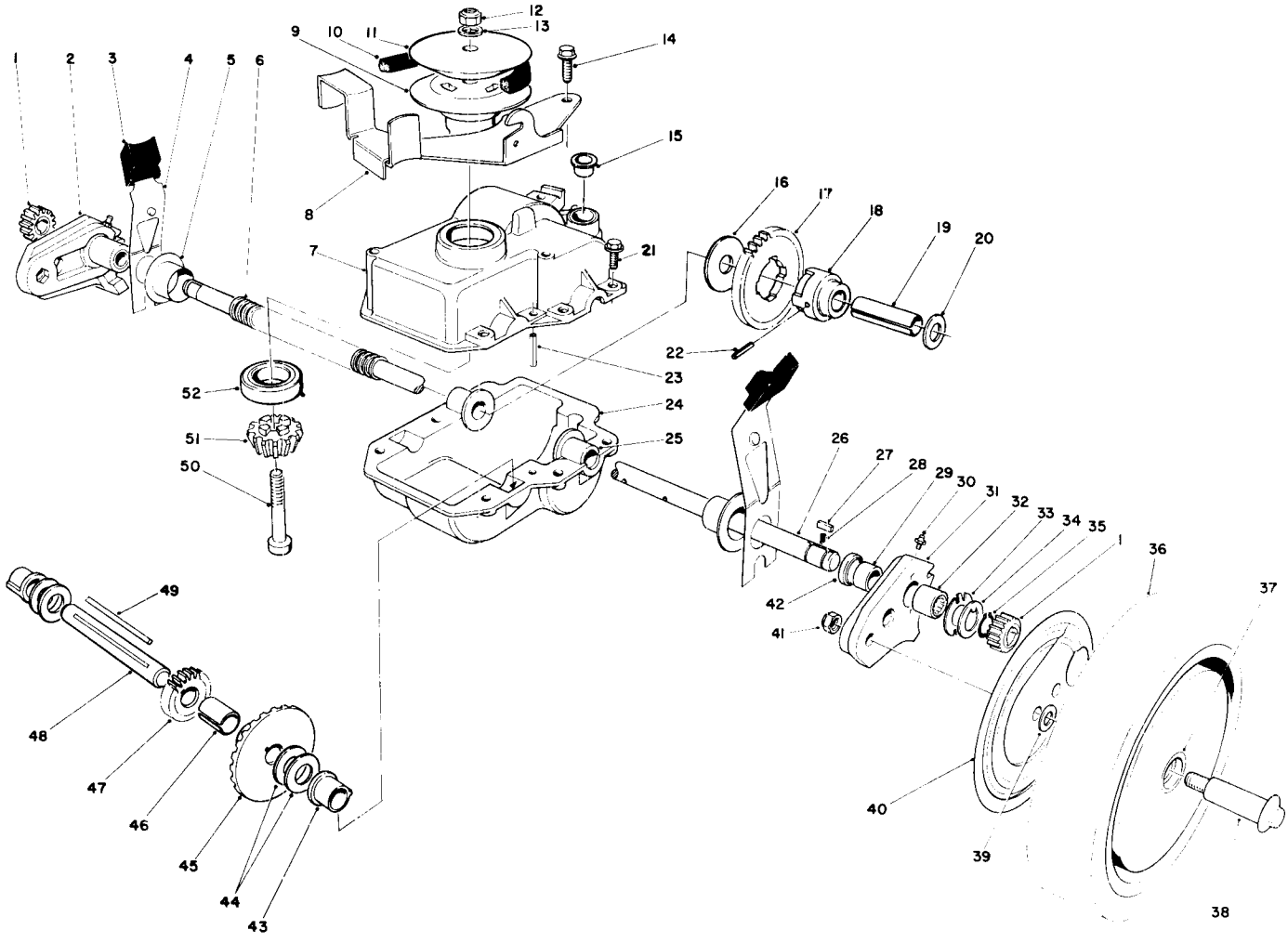

GEAR CASE ASSEMBLY

Ref. No.	Part No.	Description	No. Used
1	39-9160	Pinion	2
2	49-7720	Pivot Arm Assembly — R.H. (Incl. Ref. #29, 30, 32 & 42)	1
3	25-7740	Knob — Spring Arm	2
4	44-1010	Spring Arm Assembly	2
5	42-3520	End Cap	2
6	24-7922	Cover — Drive Shaft	1
7	49-8370	Case — Upper	1
8	49-8460	Bracket — Belt Guide	1
9	49-8330	Pulley — Lower	1
10	36-8070	V-Belt	1
11	49-8340	Pulley — Upper	1
12	3296-29	Locknut	1
13	3256-2	Washer — Flat	1
14	12-3270	Screw — Special	2
15	12-0510	Caplug	1
16	29-9690	Washer	1
17	29-9271	Gear — 42T	1
18	49-4280	Adapter — Drive	1
19	36-9120	Spacer — Output Shaft	1
20	36-4780	Washer	1
21	49-2040	Screw — Self Tapping	6
22	32121-109	Pin — Coil	1
23	32121-100	Pin — Coil	1
24	29-9410	Case — Lower	1
25	47-5220	Bushing — Output Shaft	2
26	44-0850	Shaft — Output	1
27	39-9680	Key — Rectangular	2

Ref. No.	Part No.	Description	No. Used
28	39-9650	Spring	2
29	47-2890	Bushing	2
30	302-56	Grease Fitting	2
31	49-7710	Pivot Arm Assembly — L.H. (Incl. Ref. #29, 30, 32 & 42)	1
32	48-2060	Bearing — Roller	2
33	49-7690	Washer — Thrust, Inner	2
34	49-7700	Washer — Thrust, Outer	2
35	32151-68	Ring — Retaining	4
36	11-9519	Wheel, Tire & Gear Assembly (Incl. Ref. #37)	2
37	27-6250	Bushing — Wheel	4
38	27-6231	Bolt — Wheel	2
39	40-1940	Washer — Wheel Bolt	2
40	52-4860	Cover — Wheel	2
41	3296-6	Locknut	2
42	47-6730	Seal	2
43	52-5410	Bushing — Short Shaft	2
44	36-4791	Washer — Thrust	4
45	39-6670	Gear — Bevel	1
46	36-9130	Spacer — Short Shaft	1
47	46-3550	Gear — 14T	1
48	46-9470	Shaft — Intermediate	1
49	39-7841	Key — Square	1
50	3274-61	Screw — Socket Head	1
51	49-8350	Pinion — Bevel	1
52	38-7820	Bearing — Ball	1
*	49-4300	Gear Case Complete	1

*Not Illustrated

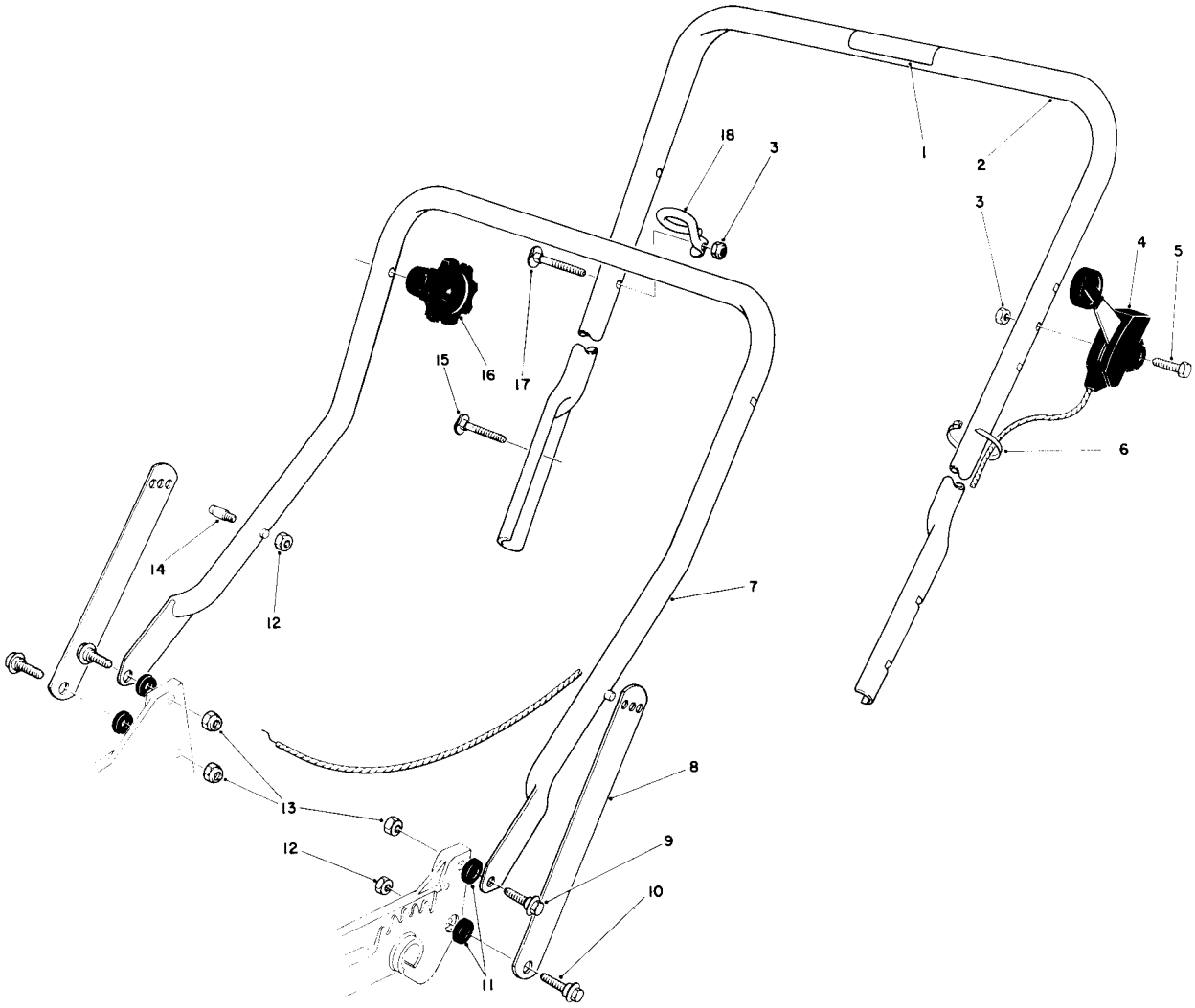

HANDLE ASSEMBLY

Ref. No.	Part No.	Description	No. Used
1	52-7520	Decal — Instructions	1
2	11-9559	Handle — Upper	
		(Incl. Ref. #1)	1
3	3296-42	Locknut	2
4	46-6000	Control — Throttle	
		Bend Type #1	
		Sheath Lg. 49 inch	
		Wire Lg. 2-1/8 inch	1
5	321-10	Capscrew	1
6	3290-378	Cable Tie	1
7	43-1360	Handle — Lower	1

Ref. No.	Part No.	Description	No. Used
8	43-1370	Latch — Handle	2
9	27-7211	Screw — Shoulder	2
10	27-7210	Screw — Shoulder	2
11	3-3287	Spacer — Handle Latch	4
12	3296-47	Locknut	3
13	3296-29	Locknut	3
14†	49-2750	Pin — Handle	2
15	17-9421	Screw — Handle	2
16	19-4050	Knob — Handle Release	2
17	46-6433	Screw — Handle	1
18	46-8080	Guide — Rope	1

†Service Replacement Part.

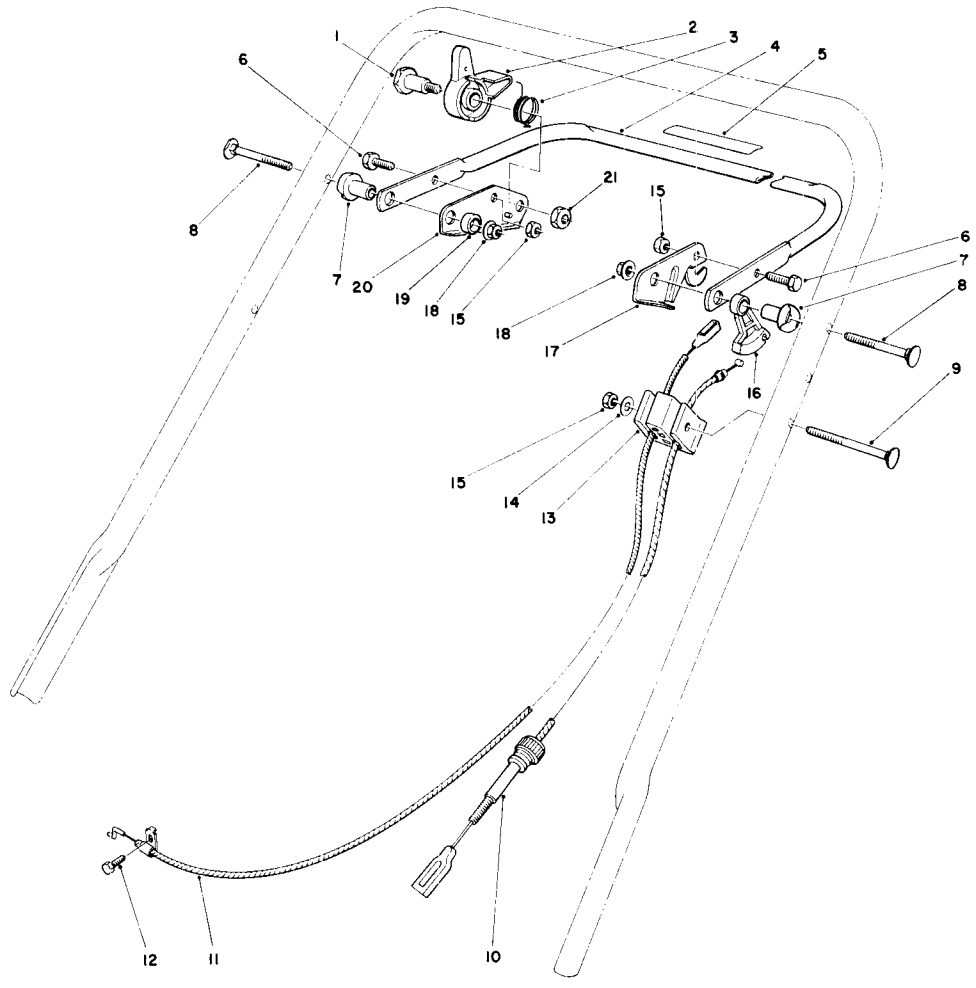

TRACTION CONTROL ASSEMBLY

Ref. No.	Part No.	Description	No. Used
1	7-0846	Bolt — Shoulder	1
2	51-0300	Lockout — Neutral	1
3	51-0290	Spring — Torsion	1
4	49-4220	Bar — Control	1
5	51-0970	Decal — Variable Speed	1
6	321-3	Capscrew	2
7	49-1630	Support — Spacer	2
8	17-9421	Screw — Handle	2
9	46-6434	Screw — Handle	1
10	46-5481	Cable — Traction	1
11	46-8011	Cable — Brake	1

Ref. No.	Part No.	Description	No. Used
12	2210-250	Capscrew	1
13	46-6980	Support — Cable	1
14	3256-22	Washer — Flat	1
15	3296-42	Locknut	3
16	46-5520	Lever — Traction	1
17	46-7950	Lever — Control	1
18	3296-58	Locknut	2
19	256-276	Spacer — Nylon	1
20	51-0280	Bracket — Lockout	1
21	3296-59	Locknut	1

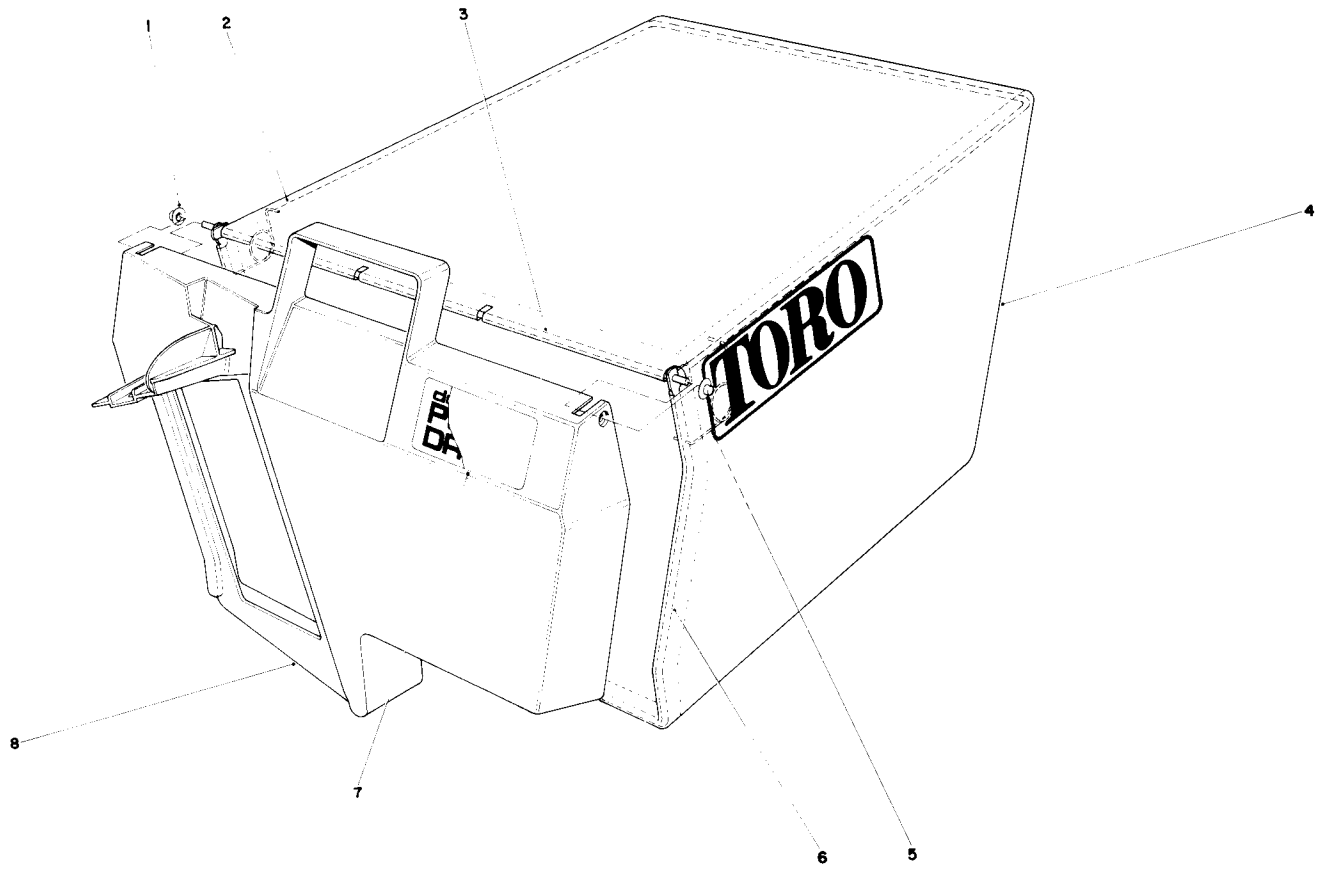

GRASS BAG ASSEMBLY NO. 11-0189

Ref. No.	Part No.	Description	No. Used
1	3290-422	Push Nut	2
2	42-4030	Bag Frame Upper	1
3	33-4820	Hinge Bag Door	1
4	8-2759	Grass Bag	1

Ref. No.	Part No.	Description	No. Used
5	36-6910	Spring	2
6	42-4020	Frame Bag	1
7	40-2240	Decal — Bag Door	1
8	37-1392	Door Grass Bag	1

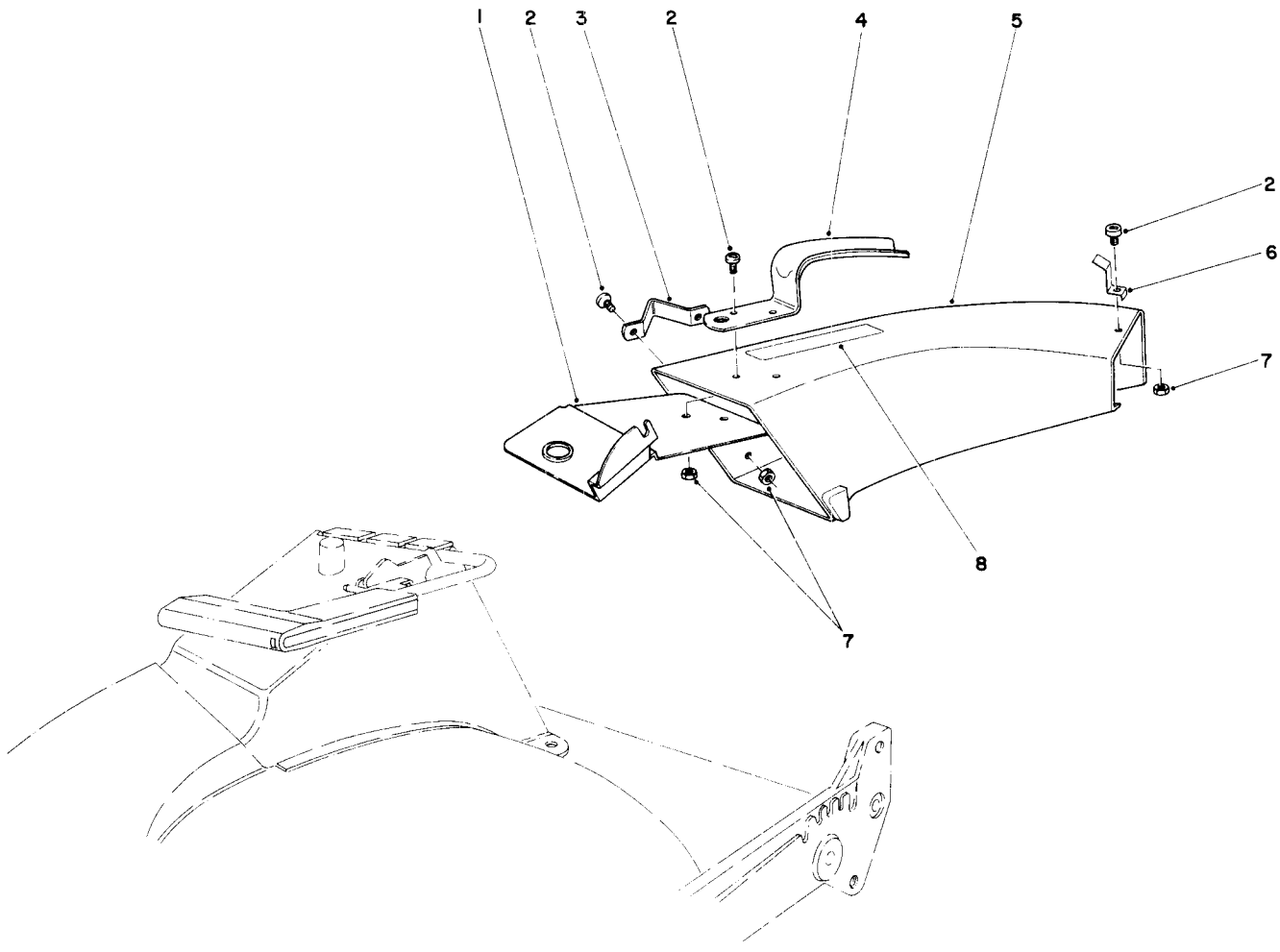

SIDE DISCHARGE CHUTE MODEL NO. 59108 (Optional)

Ref. No.	Part No.	Description	No. Used
1	44-2330	Plate — Discharge Chute	1
2	3251-3	Screw	5
3	46-6580	Bracket — Side	1
4	42-1340	Handle — Grass Chute	1

Ref. No.	Part No.	Description	No. Used
5	11-7149	Chute — Discharge (Incl. Ref. #8)	1
6	49-2630	Clip — Cable Stop	1
7	3296-12	Locknut	5
8	39-9120	Decal — Caution	1

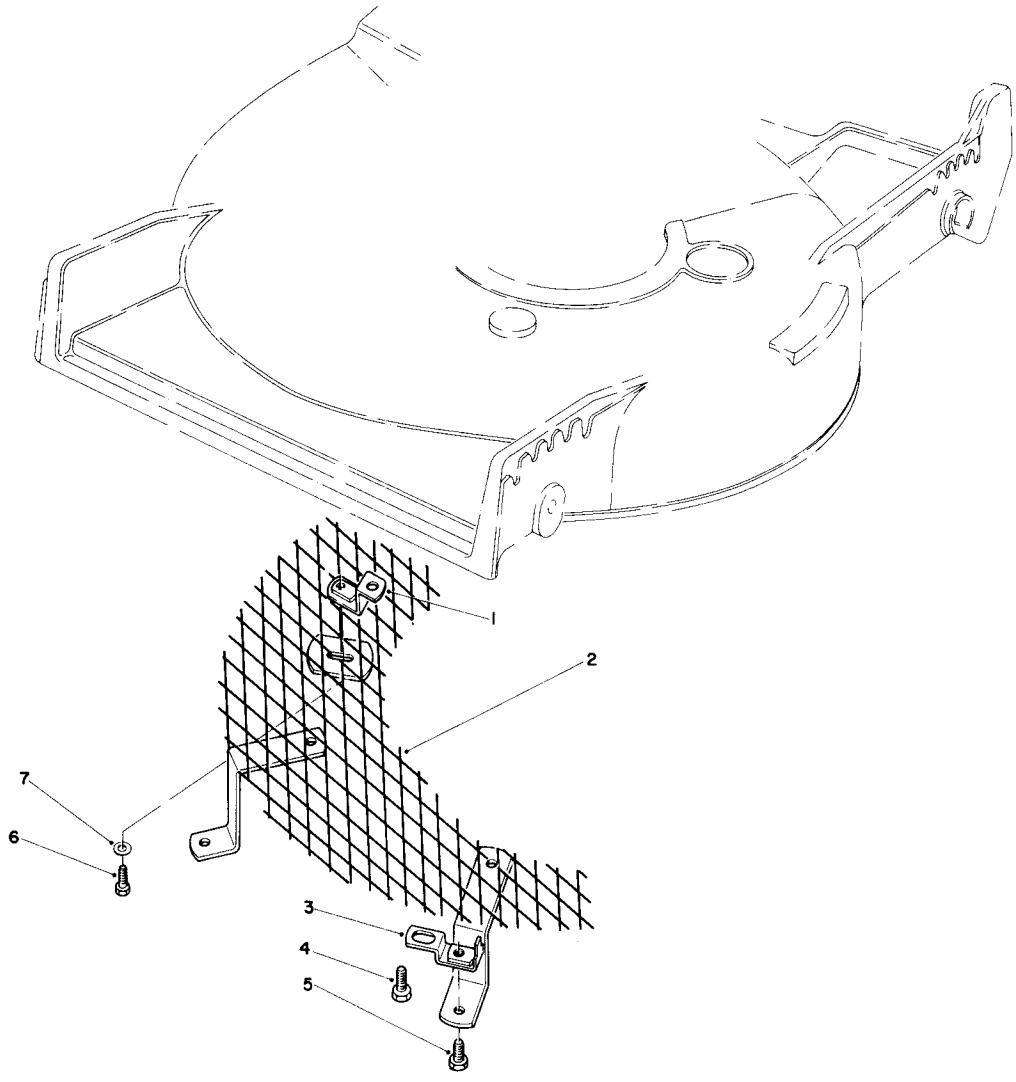

LEAF SHREDDER KIT MODEL NO. 59157 (Optional)

Ref. No.	Part No.	Description	No. Used
1	47-6260	Bracket	1
2	47-6230	Screen	1
3	46-4880	Mounting Bracket	2
4	32144-11	Screw — Self Tapping	3

Ref. No.	Part No.	Description	No. Used
5	321-3	Capscrew — Hex Hd.	2
6	321-5	Capscrew — Hex Hd.	1
7	3256-1	Washer	1

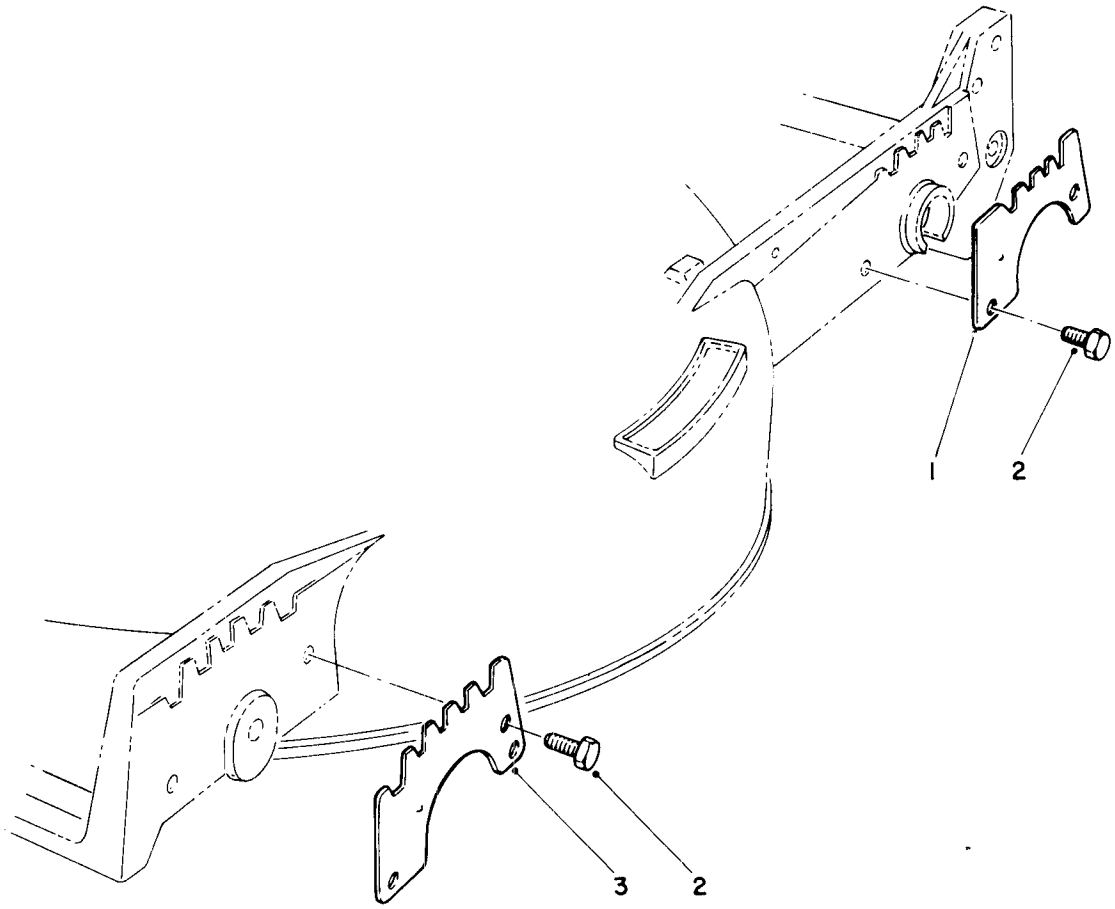

WEAR PLATE KIT NO. 49-4080 (Optional)

Ref. No.	Part No.	Description	No. Used
1	49-4070	Plate — Wear, Rear	2
2	32104-17	Screw — Thread Forming	8

Ref. No.	Part No.	Description	No. Used
3	43-5050	Plate — Wear, Front	2

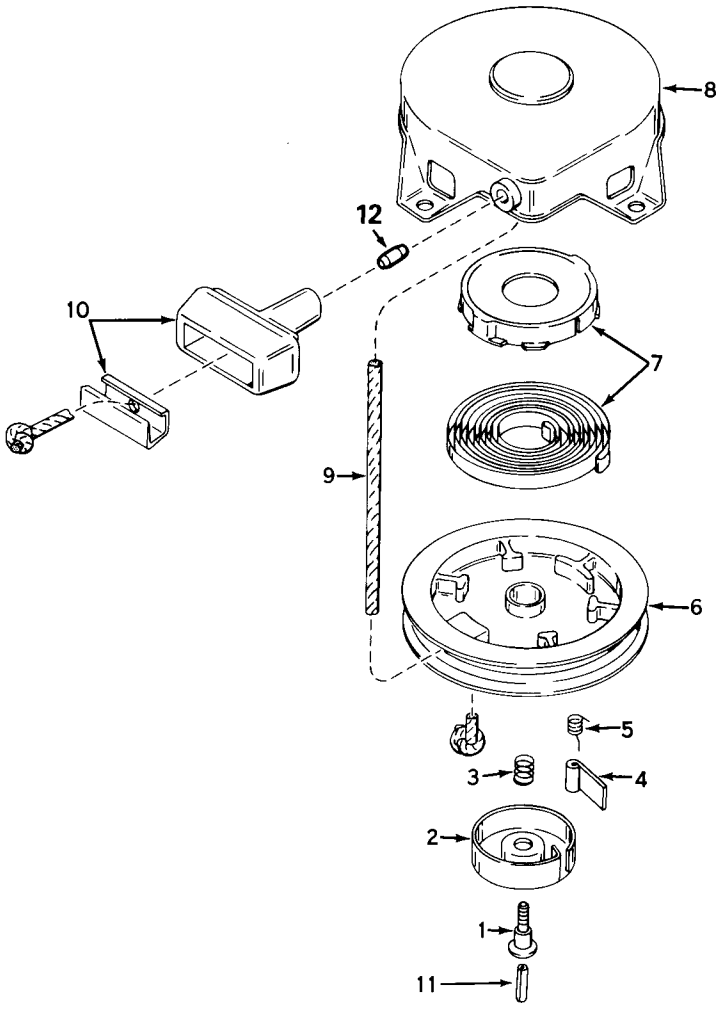

REWIND STARTER NO. 590420A

Ref. No.	Part No.	Description	No. Used
1	590409A	Screw — Retainer	1
2	590410	Retainer — R.H.	1
3	590411	Spring — Brake	1
4	590148	Dog — Starter	1
5	590412	Spring — R.H. Dog	1
6	590413A	Pulley	1
7	590414	Spring & Keeper Assy.	1

Ref. No.	Part No.	Description	No. Used
8	590536	Housing Assy. — Starter (Incl. #1)	1
9	590535	Rope — Starter	1
10	590387	Handle Assy. — Starter	1
11	590459	Pin — Centering	1
12	34985	Stop & Staple — Rope (Not used on all models)	1

ENGINE TECUMSEH MODEL NO. TVS90-43228D

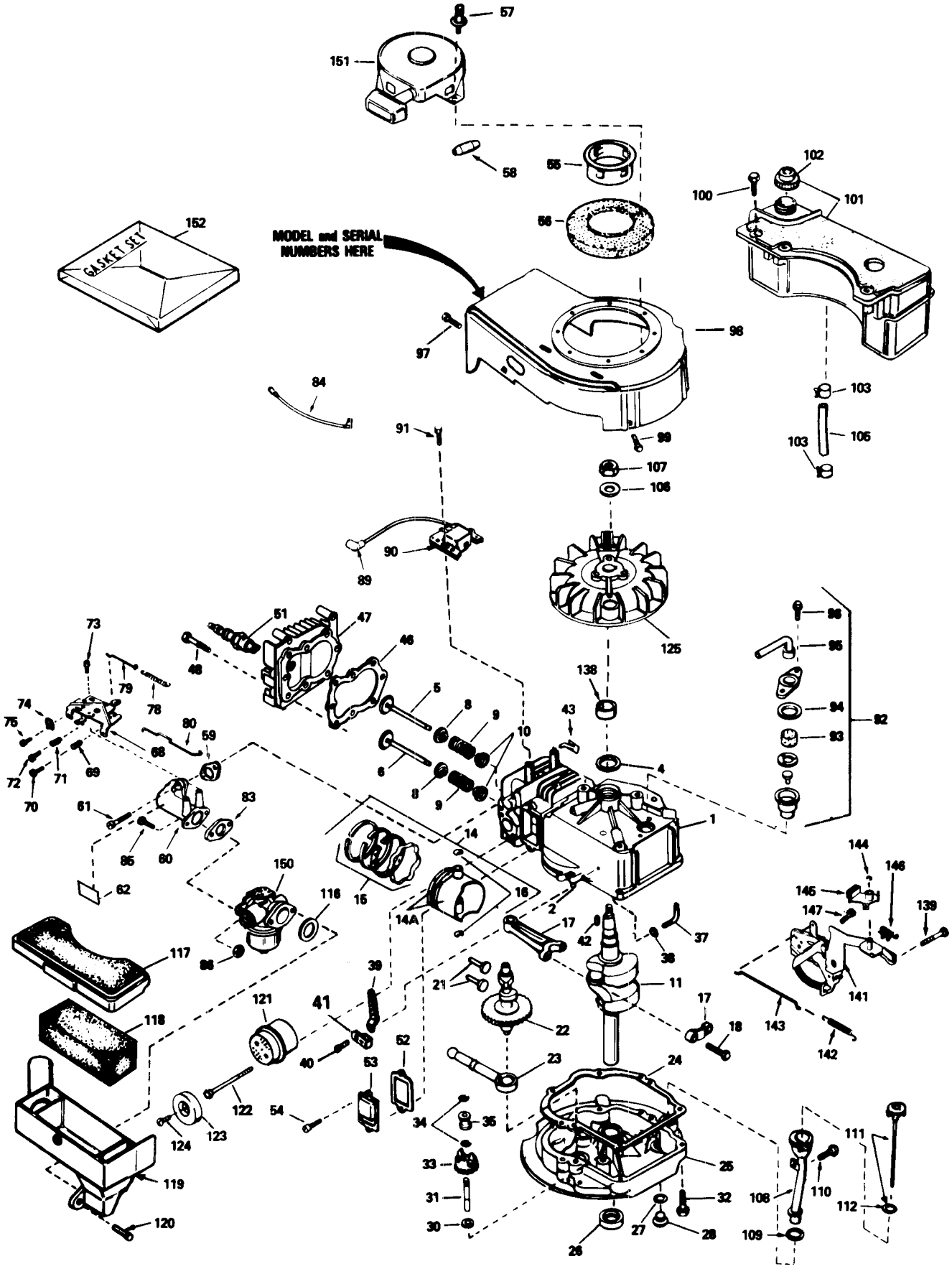

ENGINE TECUMSEH MODEL NO. TVS90-43228D

Ref. No.	Part No.	Description	No. Used
1	34975	Cylinder Assy. (Incl. #2 & 4)	1
2	26727	Pin — Dowel	2
4	32600	Seal — Oil	1
5	29314B	Valve — Intake (Std.) (Incl. #10)	1
5	29315C	Valve — Intake (1/32" Oversize) (Incl. #10)	1
6	29313C	Valve — Exhaust (Std.) (Incl. #10)	1
6	29315C	Valve — Exhaust (1/32" Oversize) (Incl. #10)	1
8	31671	Cap — Upper Valve Spring	2
9	31672	Spring — Valve	2
10	31673	Cap — Lower Valve Spring	2
11	34440	Crankshaft	1
14	34514	Piston — Pin & Ring Assy. (Std.) (Incl. #14A, 15 & 16)	1
14	34515	Piston — Pin & Ring Assy. (.010 Oversize) (Incl. #14A, 15 & 16)	1
14	34516	Piston — Pin & Ring Assy. (.020 Oversize) (Incl. #14A, 15 & 16)	1
14A	32538B	Piston & Pin Assy. (Std.) (Incl. #16)	1
14A	32548B	Piston & Pin Assy. (.010 Oversize) (Incl. #16)	1
14A	32549B	Piston & Pin Assy. (.020 Oversize) (Incl. #16)	1
15	28986	Ring Set — Piston (Std.)	1
15	28987	Ring Set — Piston (.010 Oversize)	1
15	28988	Ring Set — Piston (.020 Oversize)	1
16	20381	Ring — Piston Pin Retaining	2
17	30963B	Rod Assy. — Connecting (Incl. #18)	1
18	32610A	Screw — Connecting Rod	2
21	27241	Lifter — Valve	2
22	33553	Camshaft (Mechanical Compression Release)	1
23	29914	Pump Assy. — Oil	1
24	*26750A	Gasket — Mounting Flange	1
25	34831	Flange Assy. — Mounting (Incl. #26, 27, 28 & 31)	1
26	26208	Seal — Oil	1
27	*28833	Gasket — Oil Drain Plug	1
28	27244	Plug — Oil Drain	1
30	30590A	Washer — Flat	1
31	30574	Shaft — Mechanical Governor	1
32	650488	Screw — Hex Hd.	6
33	30591	Gear Assy. — Governor (Incl. #30)	1
34	29193	Ring — Retaining	2
35	30588A	Spool — Governor	1
37	30589	Rod — Governor (Incl. #38)	1
38	28277	Washer — Flat	1
39	31383A	Lever — Governor	1
40	650548	Screw — Hex Washer Hd.	1
41	31335	Clamp — Governor Lever	1
42	611004	Key — Flywheel (Solid State)	1
43	29443	Clip — Spring	1
46	*29953B	Gasket — Cylinder Head	1
47	34335	Head — Cylinder	1
48	6021A	Screw — Hex Flange Hd.	8
51	35078	Plug — Spark (Autolite 458, Champion J-19LM or Equivalent	1
52	*27234	Gasket — Breather	1
53	32755	Cover — Valve Spring	1
54	650128	Screw — Fil. Hd.	2
55	34449	Hub — Starter	1
56	35009	Screen — Starter	1
57		Pop Rivet (Can Be Purchased Locally)	4
58	34985	Rope Stop & Staple Assy.	1
59	*34690	Gasket — Intake	1
60	31384A	Pipe — Intake (Incl. #59)	1
61	650451	Screw — Hex Hd.	2
62	34144	Decal — Primer	1
68	33131A	Control Assy. — Remote Speed (Incl. #69-72)	1
69	33802	Spring — Compression	1
70	650777	Screw — Fil. Hd.	1
71	31342	Spring — Compression	1
72	650549	Screw — Fil. Hd.	1
73	30200	Screw — Hex Washer Hd. Self-Tap	2
74	27793	Clip — Conduit	1
75	28942	Screw — Hex Washer Hd.	1
78	31361	Spring — Governor	1
79	34337	Link — Governor Spring	1
80	34336	Link — Governor-To-Throttle	1
83	*26756	Gasket — Carburetor	1
84	34961	Wire — Ground	1
85	6201	Screw — Hex Hd.	2
86	29752	Nut & Lockwasher	2
89	610118	Cover — Spark Plug	1
90	34443A	Lamination & Coil Assy. (Solid State) (Incl. #89)	1
91	650814	Screw — Hex Hd.	2
92	34214A	Breather Assy. (Incl. #93-96)	1
93	33734	Element — Breather	1
94	33735	Gasket — Breather	1
95	33886	Tube — Breather	1

*Indicates parts included in Gasket Set, Ref. #152.

ENGINE TECUMSEH MODEL NO. TVS90-43228D (Continued)

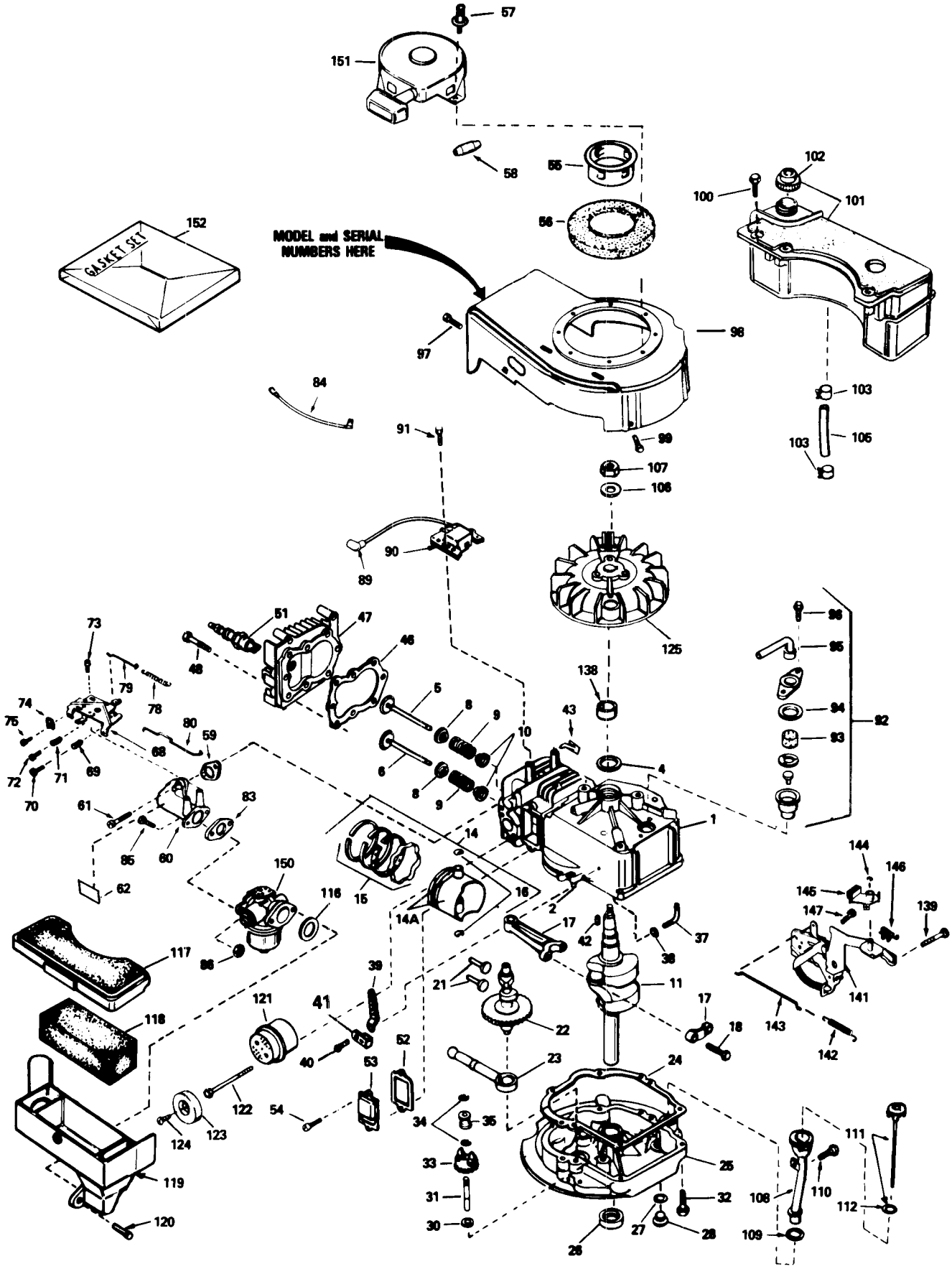

ENGINE TECUMSEH MODEL NO. TVS90-43228D (Continued)

Ref. No.	Part No.	Description	No. Used
96	30200	Screw — Hex Washer Hd. Self-Tap	2
97	30200	Screw — Hex Washer Hd. Self-Tap	2
98	34936	Housing — Blower	1
99	650831	Screw — Hex Washer Hd. Powerlok Thread	2
100	28763	Screw — Hex Washer Hd.	3
101	34476	Tank Assy. — Fuel (Incl. #102)	1
102	33032	Cap — Fuel Tank	1
103	26460	Clamp — Fuel Line	2
105	34682	Line — Fuel	1
106	650815	Washer — Belleville	1
107	650816	Nut — Flywheel	1
108	34264	Tube — Oil Fill	1
109	34265	Gasket — Oil Fill Tube	1
110	650562	Screw — Hex Washer Hd.	1
111	34281	Dipstick — Oil (Incl. #112)	1
112	33590	"O" Ring	1
116	*34338	Gasket — Air Cleaner	1
117	34341	Cover — Air Cleaner	1
118	34340	Element — Air Cleaner	1
119	34858	Body — Air Cleaner	1
120	650806	Screw — Hex Washer Hd. Shoulder	2
121	27181B	Muffler (Incl. #122)	1
122	650795	Screw, Hex Hd.	2
123	32431	Cover — Muffler	1
124	650643	Screw — Pan Hd. Self-Tap	1
125	611046	Flywheel	1
138	34080	Spacer — Flywheel Key	1
139	650839	Screw — Hex Hd. Self-Tap	2
141	35015	Bracket Assy.	1
142	34965	Spring — Extension	1
143	34966	Link — Control	1
144	32309	Ring — Retaining	1
145	34968	Lever — Brake	1
146	610973	Terminal Assy.	1
147	650837	Screw — Hex Hd. E.T.	1
150	632098	Carburetor (Incl. #83)	1
151	590420A	Starter — Rewind	1
152	33238C	Gasket Set (Incl. Items Marked *)	1

*Indicates parts included in Gasket Set, Ref. #152.

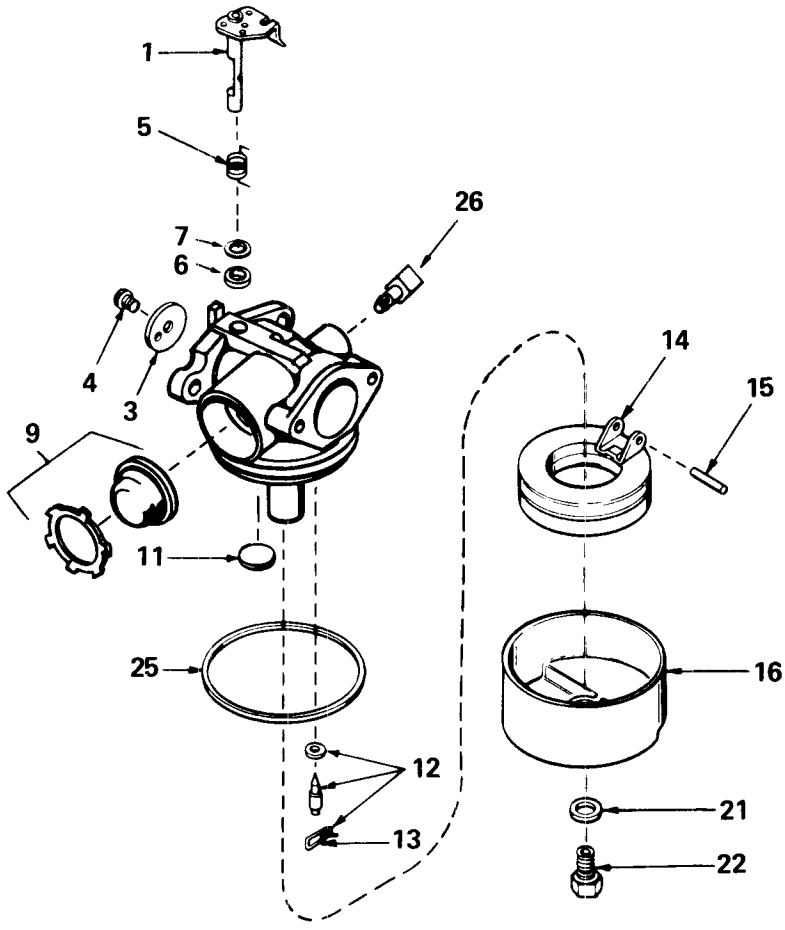

CARBURETOR NO. 632098

Ref. No.	Part No.	Description	No. Used
1	631615	Shaft & Lever Assy., Throttle	1
3	631616	Shutter — Throttle	1
4	650506	Screw — Throttle Shutter	1
5	631767	Spring — Throttle Return	1
6	631971	Seal — Dust	1
7	631184	Washer — Flat	1
9	632047	Primer Assembly	1
11	631027	Plug — Welch	1
12	631021	Inlet Needle — Seat & Clip Assy. (Incl. Ref. #13)	1

Ref. No.	Part No.	Description	No. Used
13	631022	Clip — Inlet Needle	1
14	632019	Float — Carburetor	1
15	631024	Shaft — Float	1
16	631700	Bowl — Float	1
21	631334	Gasket — Bowl-To-Body	1
22	631937	Nut — Float Bowl	1
25	631028	Gasket — Bowl-To-Body	1
26	631807	Fitting — Fuel Inlet	1