Form No. 3480-266 Rev A

TORO

Count on it.

Operator's Manual

Flex-Force Power System® 60V Pole Saw

Model No. 51847T—Serial No. 326000000 and Up

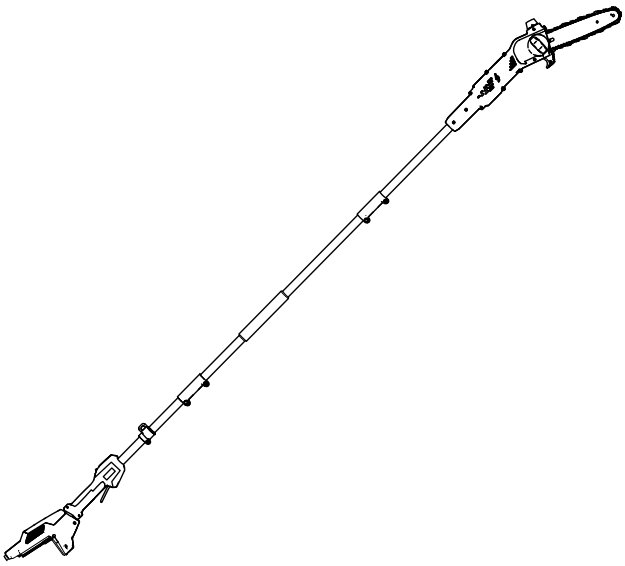

Register at www.Toro.com.
Original Instructions (EN)

CE UK CA

3480-266



For assistance, please see www.Toro.com/support for instructional videos or contact your Authorized Service Dealer before returning this product.

This product complies with all relevant European directives; for details, please see the separate product specific Declaration of Conformity (DOC) sheet.

Introduction

This pole saw is designed for trimming small branches and limbs up to 6 inches (15.2 cm) in diameter. It is to be used only by adults. It is designed to use Flex-Force™ 60V lithium-ion battery packs. These battery packs are designed to be charged only by Flex-Force 60V lithium-ion battery chargers. Using these products for purposes other than their intended use could prove dangerous to you and bystanders.

Important: **If you are using this machine with a battery pack that is 4.0 Ah or greater you must install the included quick-release harness for proper support and balance.**

Do not use other harnesses or multiple harnesses when operating the machine.

Model 51847T does not include a battery or a charger.

Read this information carefully to learn how to operate and maintain your product properly and to avoid injury and product damage. You are responsible for operating the product properly and safely.

Visit www.Toro.com for more information, including safety tips, training materials, accessory information, help finding a dealer, or to register your product.

© 2026—The Toro® Company
8111 Lyndale Avenue South
Bloomington, MN 55420

Register at www.Toro.com.

Original Instructions (EN)
Printed in China
All Rights Reserved

3480-266

Whenever you need service, genuine Toro parts, or additional information, contact an Authorized Service Dealer or Toro Customer Service and have the model and serial numbers of your product ready. Figure 1 identifies the location of the model and serial numbers on the product. Write the numbers in the space provided.

Important: **With your mobile device, you can scan the QR code (if equipped) on the serial number plate to access warranty, parts, and other product information.**

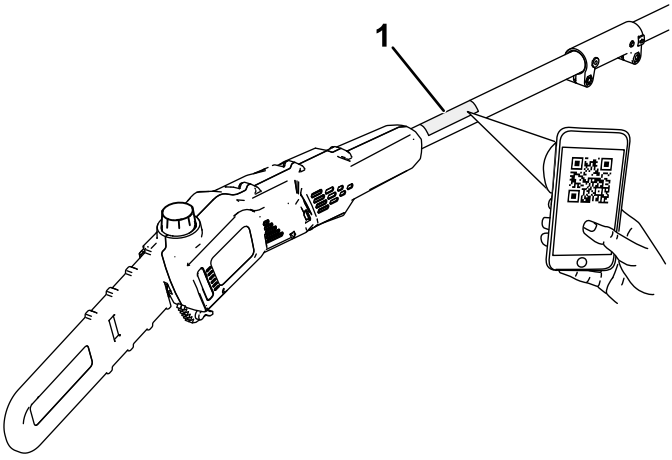

g425378

Figure 1

1. Model and serial number location.

Model No. _____

Serial No. _____

Safety-Alert Symbol

The safety-alert symbol (Figure 2) shown in this manual and on the machine identifies important safety messages that you must follow to prevent accidents.



g000502

Figure 2
Safety-alert symbol

The safety-alert symbol appears above information that alerts you to unsafe actions or situations and is followed by the word **DANGER**, **WARNING**, or **CAUTION**.

DANGER indicates an imminently hazardous situation which, if not avoided, **will** result in death or serious injury.

WARNING indicates a potentially hazardous situation which, if not avoided, **could** result in death or serious injury.

CAUTION indicates a potentially hazardous situation which, if not avoided, **may** result in minor or moderate injury.

This manual uses two other words to highlight information. **Important** calls attention to special mechanical information and **Note** emphasizes general information worthy of special attention.

Safety

⚠ WARNING

Read all safety warnings, instructions, illustrations and specifications provided with this power tool.

Failure to follow all instructions listed below may result in electric shock, fire and/or serious injury.

Save all warnings and instructions for future reference.

The term "power tool" in all the warnings refers to your mains-operated (corded) power tool or battery-operated (cordless) power tool.

IMPORTANT SAFETY INSTRUCTIONS

I. Work area safety

1. **Keep work area clean and well lit.** *Cluttered or dark areas invite accidents.*
2. **Do not operate power tools in explosive atmospheres, such as in the presence of flammable liquids, gases, or dust.** *Power tools create sparks which may ignite the dust or fumes.*
3. **Keep children and bystanders away while operating a power tool.** *Distractions can cause you to lose control.*

II. Electrical safety

1. **Power tool plugs must match the outlet. Never modify the plug in any way. Do not use any adapter plugs with earthed (grounded) power tools.** *Unmodified plugs and matching outlets will reduce risk of electric shock.*
2. **Avoid body contact with earthed or grounded surfaces, such as pipes, radiators, ranges and refrigerators.** *There is an increased risk of electric shock if your body is earthed or grounded.*
3. **Do not expose power tools to rain or wet conditions.** *Water entering a power tool will increase the risk of electric shock.*
4. **Do not abuse the cord. Never use the cord for carrying, pulling or unplugging the power tool. Keep cord away from heat, oil, sharp edges or moving parts.** *Damaged or entangled cords increase the risk of electric shock.*

5. **When operating a power tool outdoors, use an extension cord suitable for outdoor use.** *Use of a cord suitable for outdoor use reduces the risk of electric shock.*

6. **If operating a power tool in a damp location is unavoidable, use a residual current device (RCD) protected supply.** *Use of an RCD reduces the risk of electric shock.*

III. Personal safety

1. **Stay alert, watch what you are doing and use common sense when operating a power tool. Do not use a power tool while you are tired or under the influence of drugs, alcohol, or medication.** *A moment of inattention while operating power tools may result in serious personal injury.*

2. **Use personal protective equipment. Always wear eye protection.** *Protective equipment such as dust mask, non-skid safety shoes, hard hat, or hearing protection used for appropriate conditions reduces personal injuries.*

3. **Prevent unintentional starting. Ensure the switch is in the OFF-position before connecting to power source and/or battery pack, picking up or carrying the tool.** *Carrying power tools with your finger on the switch or energizing power tools that have the switch on invites accidents.*

4. **Remove any adjusting key or wrench before turning the power tool on.** *A wrench or a key left attached to a rotating part of the power tool may result in personal injury.*

5. **Do not overreach. Keep proper footing and balance at all times.** *This enables better control of the power tool in unexpected situations.*

6. **Dress properly. Do not wear loose clothing or jewelry. Keep your hair and clothing away from moving parts.** *Loose clothes, jewelry, or long hair can be caught in moving parts.*

7. **If devices are provided for the connection of dust extraction and collection facilities, ensure these are connected and properly used.** *Use of dust collection can reduce dust-related hazards.*

8. **Do not let familiarity gained from frequent use of tools allow you to become complacent and ignore tool safety principles.** *A careless action can cause severe injury within a fraction of a second.*

IV. Power tool use and care

1. **Do not force the power tool. Use the correct power tool for your application.** *The correct power tool will do the job better and safer at the rate for which it was designed.*
2. **Do not use the power tool if the switch does not turn it on and off.** *Any power tool that cannot be controlled with the switch is dangerous and must be repaired.*
3. **Disconnect the plug from the power source and/or remove the battery pack, if detachable, from the power tool before making any adjustments, changing accessories, or storing power tools.** *Such preventive safety measures reduce the risk of starting the power tool accidentally.*
4. **Store idle power tools out of the reach of children and do not allow persons unfamiliar with the power tool or these instructions to operate the power tool.** *Power tools are dangerous in the hands of untrained users.*
5. **Maintain power tools and accessories. Check for misalignment or binding of moving parts, breakage of parts, and any other condition that may affect the power tool's operation. If damaged, have the power tool repaired before use.** *Many accidents are caused by poorly maintained power tools.*
6. **Keep cutting tools sharp and clean.** *Properly maintained cutting tools with sharp cutting edges are less likely to bind and are easier to control.*
7. **Use the power tool, accessories, and tool bits etc. in accordance with these instructions, taking into account the working conditions and the work to be performed.** *Use of the power tool for operations different from those intended could result in a hazardous situation.*
8. **Keep handles and grasping surfaces dry, clean and free from oil and grease.** *Slippery handles and grasping surfaces do not allow for safe handling and control of the tool in unexpected situations.*

V. Battery tool use and care

1. **Recharge only with the charger specified by the manufacturer.** *A charger that is suitable for one type of battery pack may create a risk of fire when used with another battery pack.*
2. **Use power tools only with specifically designated battery packs.** *Use of any other battery packs may create a risk of injury and fire.*
3. **When battery pack is not in use, keep it away from other metal objects, like paper clips, coins, keys, nails, screws or other small metal objects, that can make a connection from one terminal to another.** *Shorting the battery terminals together may cause burns or a fire.*
4. **Under abusive conditions, liquid may be ejected from the battery; avoid contact. If contact accidentally occurs, flush with water. If liquid contacts eyes, additionally seek medical help.** *Liquid ejected from the battery may cause irritation or burns.*
5. **Do not use a battery pack or tool that is damaged or modified.** *Damaged or modified batteries may exhibit unpredictable behavior resulting in fire, explosion or risk of injury.*
6. **Do not expose a battery pack or tool to fire or excessive temperature.** *Exposure to fire or temperature above 130 °C (265 °F) may cause explosion.*
7. **Follow all charging instructions and do not charge the battery pack or tool outside the temperature range specified in the instructions.** *Charging improperly or at temperatures outside the specified range may damage the battery and increase the risk of fire.*

VI. Service

1. **Have your power tool serviced by a qualified repair person using only identical replacement parts.** *This will ensure that the safety of the power tool is maintained.*
2. **Never service damaged battery packs.** *Service of battery packs should only be performed by the manufacturer or authorized service providers.*

VII. Pole saw safety

1. **Keep all parts of the body away from the saw chain when the pole-mounted pruner is operating. Before you start the pole-mounted pruner, make sure the saw chain is not contacting anything.** *A moment of inattention while operating the pole-mounted pruner may cause entanglement of your clothing or body with the saw chain.*
2. **Always use two hands when operating the pole-mounted pruner.** *Hold the pole-mounted pruner with both hands to avoid loss of control.*
3. **To reduce the risk of electrocution, never use the pole-mounted pruner near any electrical power lines.** *Contact with or use near power lines may cause serious injury or electric shock resulting in death.*
4. **Hold the pole-mounted pruner by insulated gripping surfaces only, because the saw chain may contact hidden wiring.** *Saw chains contacting a "live" wire may make exposed metal parts of the pole-mounted pruner "live" and could give the operator an electric shock.*
5. **Wear eye and ear protection. Further protective equipment for hands and slip-resistant footwear is recommended.** *Adequate protective equipment will reduce the risk of personal injury.*
6. **Always use head protection when operating the pole-mounted pruner overhead.** *Falling debris can result in serious personal injury.*
7. **Always keep proper footing and operate the pole-mounted pruner only when standing on fixed, secure and level surface.** *Slippery or unstable surfaces may cause a loss of balance or control of the machine.*
8. **Do not operate a pole-mounted pruner in a tree, on a ladder, from a rooftop, or any unstable support.** *Operation of a pole-mounted pruner in this manner may result in loss of balance, loss of control and personal injury.*
9. **Keep all power cords and cables away from cutting area.** *Power cords or cables may be hidden in trees and can be accidentally cut by the saw chain.*
10. **Do not use the pole-mounted pruner in bad weather conditions, especially when there is a risk of lightning.** *This decreases the risk of being struck by lightning.*
11. **When cutting a limb that is under tension, be alert for spring back.** *When the tension in the wood fibers is released, the spring*

loaded limb may strike the operator and/or throw the pole-mounted pruner out of control.

12. **Use extreme caution when cutting brush and saplings.** *The slender material may catch the saw chain and be whipped toward you or pull you off balance.*

13. **When carrying the pole-mounted pruner with the machine switched off, take care not to operate any power switch and keep the saw chain or saw blade away from your body.** *Proper carrying of the pole-mounted pruner will reduce the likelihood of accidental contact with the saw chain.*

14. **When transporting or storing the pole-mounted pruner, always fit the guide bar cover.** *Proper handling of the pole-mounted pruner will reduce the likelihood of accidental contact with the moving saw chain.*

15. **When clearing jammed material, storing or servicing the pole-mounted pruner, make sure the switch is off and the battery pack is removed.** *Unexpected actuation of the pole-mounted pruner while clearing jammed material or servicing may result in serious personal injury.*

16. **Cut wood only. Do not use pole-mounted pruner for purposes not intended. For example: do not use the pole-mounted pruner for cutting plastic, metal, masonry or non-wood building materials.** *Use of the pole-mounted pruner for operations different than intended could result in a hazardous situation.*

17. **Carry the pole saw with both hands, the pole saw switched off and away from your body. When transporting or storing the pole saw, always fit the guide bar cover.** *Proper handling of the pole saw will reduce the likelihood of accidental contact with the moving saw chain.*

18. **Do not remove cut material or hold material to be cut when the saw chain is moving.** *Make sure the switch is off and the battery disconnected when clearing jammed material. Saw chain continues to move after the switch is turned off.*

19. **Follow instructions for lubricating, chain tensioning, changing the bar and chain.** *Improperly tensioned or lubricated chain may either break or increase the chance for kickback.*

20. **This pole saw is not intended for tree felling.** *Use of the pole saw for operations different than intended could result in serious injury to the operator or bystanders.*

21. **Avoid kickback.** *Kickback may occur when the nose or tip of the guide bar touches an object, or when the wood closes in and pinches the saw chain in the cut.*

    Tip contact in some cases may cause a sudden reverse reaction, kicking the guide bar up and back toward you.

    Pinching the saw chain along the top of the guide bar may push the guide bar rapidly back toward you.

    Either of these reactions may cause you to lose control of the saw, which could result in serious personal injury. Do not rely exclusively upon the safety devices built into your saw. As a pole saw user, you should take several steps to keep your cutting jobs free from accident or injury.

    Kickback is the result of tool misuse and/or incorrect operating procedures or conditions and can be avoided by taking proper precautions as given below:

22. **Maintain a firm grip, with thumbs and fingers encircling the pole saw handles, with both hands on the handle and position your body and arm to allow you to resist kickback forces.** *Kickback forces can be controlled by the operator, if proper precautions are taken. Do not let go of the pole saw.*

23. **Only use replacement bars and chains specified by the manufacturer.** *Incorrect replacement bars and chains may cause chain breakage and/or kickback.*

24. **Follow the manufacturer's sharpening and maintenance instructions for the saw chain.** *Decreasing the depth gauge height can lead to increased kickback.*

SAVE THESE INSTRUCTIONS

Decal Symbols



Safety decals and instructions are easily visible to the operator and are located near any area of potential danger. Replace any decal that is damaged or missing.

The following tables describe the safety and instructional symbols that appear on the decals.

Pole Saw Decal Symbol	Explanation
	Cutting/dismemberment hazard of hands
	Electrical shock hazard
	Warning
	Do not expose to rain.
	Keep away from powerlines.
	Keep bystanders away.
	Stay away from moving parts.
	Read the *Operator's Manual*.
	Wear a hard hat.
	Wear eye protection.

	Wear hearing protection.
	Wear gloves.
	Wear substantial slip-resistant shoes.

Setup

Installing the Bar and Chain

⚠ DANGER

Contact with the pole saw teeth can cause serious personal injury.

- **Remove the battery pack before adjusting or maintaining the pole saw.**
- **Always wear gloves when adjusting or maintaining the pole saw.**

1. Place the pole saw on a flat surface and do not install the battery pack.
2. Remove the side cover; turn the bar cover knob counterclockwise until the knob is removed and then remove the side cover (Figure 3).

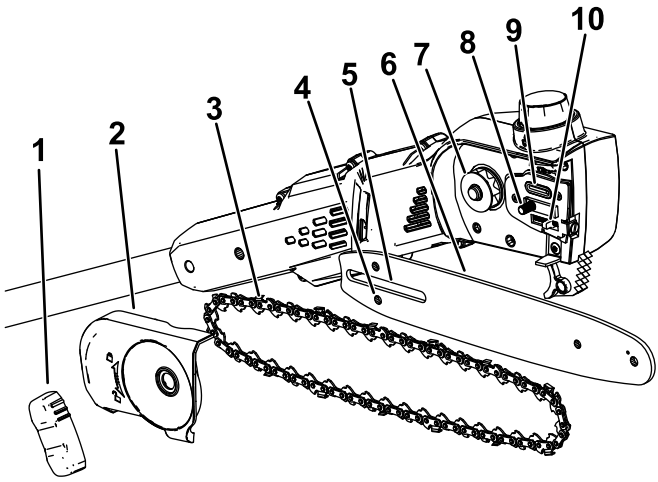

g374226

Figure 3

1. Bar cover knob
2. Side cover
3. Chain
4. Chain adjusting stud slot
5. Guide bar slot
6. Guide bar
7. Drive sprocket
8. Guide bar stud
9. Oil outlet
10. Chain adjusting stud

3. Place the chain around the sprocket on the front end of the guide bar, with the cutting edge of the chain teeth on the top of the bar facing forward as shown in the diagram beneath the side cover of the pole saw.
4. Continue to feed the chain around the guide bar and align the chain into the groove of the guide bar.
5. Position the open loop of the chain (the side not on the guide bar) around the drive sprocket on the pole saw (Figure 3).

   Important: **Ensure that the chain adjusting stud is inserted into the chain adjusting stud slot on the guide bar (Figure 3).**

   You may need to rotate the chain-tensioning screw to fit the stud into the slot on the guide bar (Figure 18).
6. Install the side cover and bar cover knob and loosely tighten the side cover by turning the knob clockwise.
7. Adjust the chain tension; refer to Adjusting the Chain Tension (page 31).

Assembling the Pole Saw

1. Unfold the sections of the handle (Figure 4).

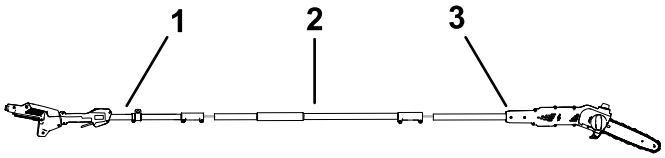

g535870

Figure 4

1. Handle pole section
2. Middle pole section
3. Saw pole section

2. Align the locking button on the middle pole section with the slotted hole at the end of the handle pole section and slide the 2 shafts together (Figure 5).

   Note: The locking button clicks into the slotted hole when the shafts are secured

3. Use the provided wrench to secure these 2 sections of the pole together (E of Figure 5).
4. Repeat this procedure to connect the saw pole section to the middle pole section (Figure 5).

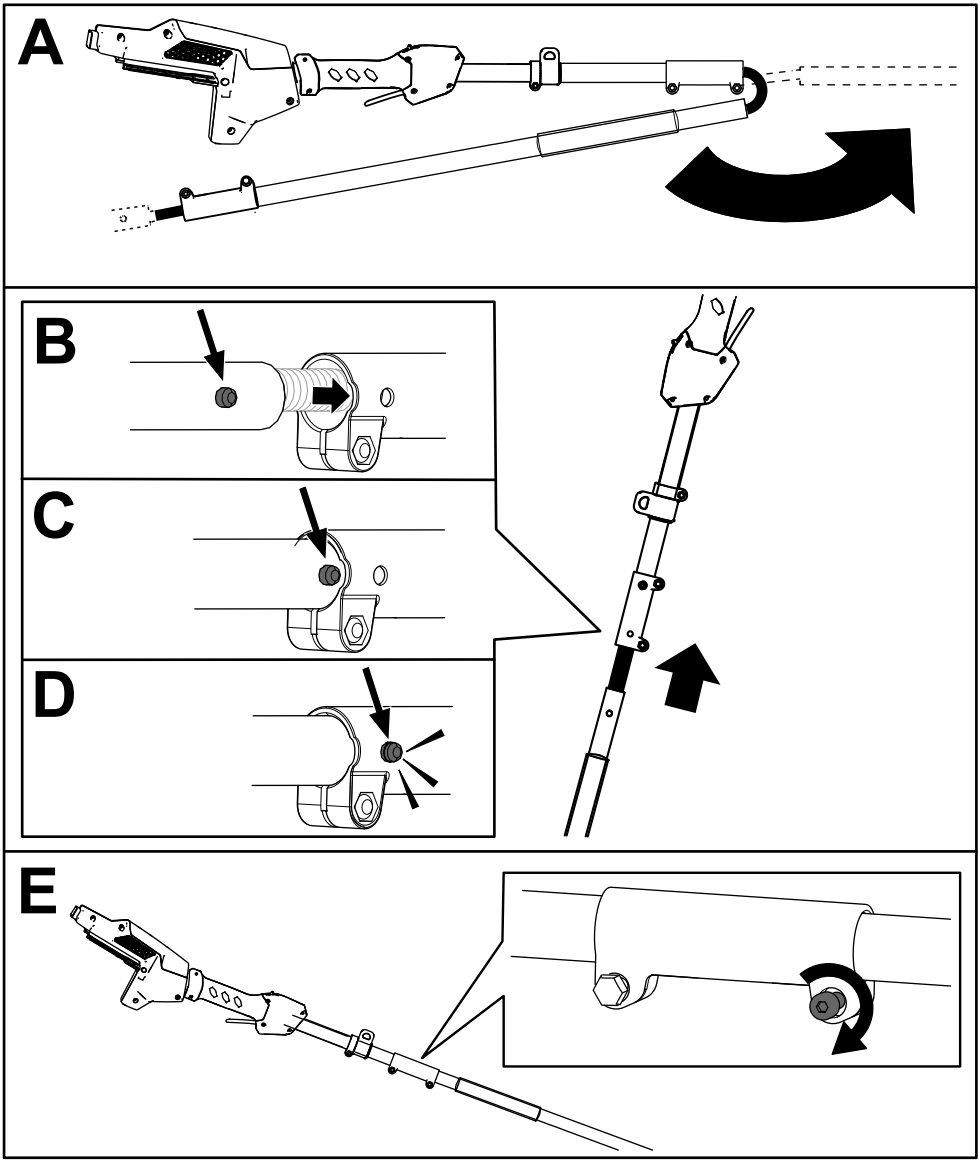

Figure 5

Adding Bar and Chain Oil to the Pole Saw

Important: **Use only bar and chain oil (sold separately).**

Fill the pole saw with bar and chain oil before first operation; refer to Checking the Oil Level and Adding Bar and Chain Oil (page 29).

Installing the Harness

Connect the metal hook on the shoulder harness to the strap collar on the pole saw handle (Figure 6).

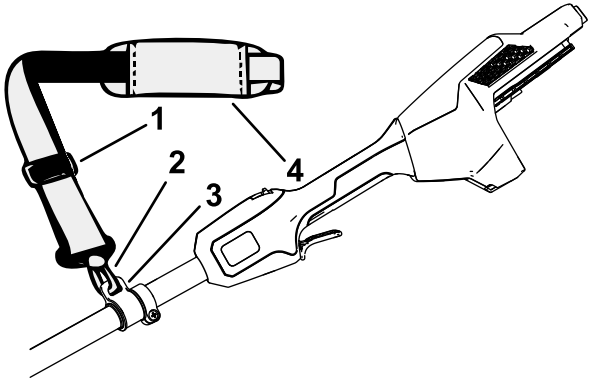

g374229

Figure 6

1. Strap adjuster
2. Metal strap hook
3. Strap collar
4. Shoulder strap

The strap length is adjustable; slide the strap adjuster up to decrease the length of the strap, or down to increase the length of the strap (Figure 6).

If there is ever an emergency and you need to rapidly remove the harness, disconnect the quick-release buckle as follows:

1. Press in on the sides of the buckle (A of Figure 7).
2. Allow the buckle to disconnect (B of Figure 7).

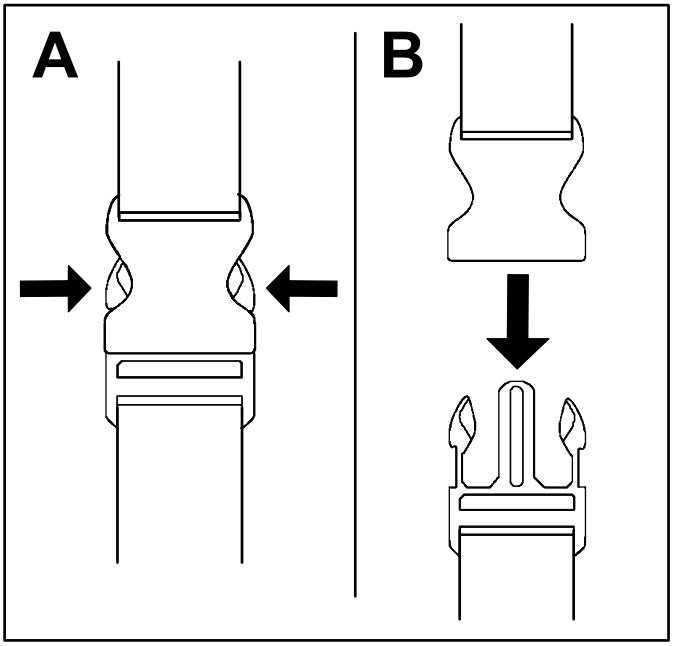

g340477

Figure 7

Product Overview

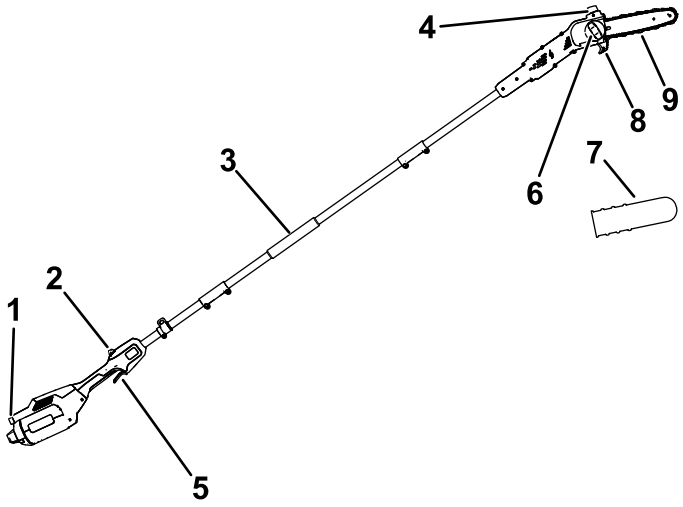

g374230

Figure 8

1. Button latch
2. Trigger lock
3. Front handle
4. Oil cap
5. Trigger
6. Bar cover knob
7. Guide bar cover
8. Cutting guide
9. Guide bar and chain

Specifications

Model	51847T
Bar Length (with 88619 and 88621 equipped)	25.4 cm (10 inches)
Chain Gauge (with 88619 and 88621 equipped)	0.050 inches
Chain Pitch (with 88619 and 88621 equipped)	1/4 inch
Chain Length (with 88619 and 88621 equipped)	58 links
Weight (without a battery)	4.1 kg (9 lbs)
Charger Type	Flex-Force 60V lithium-ion chargers
Battery Type	Flex-Force 60V lithium-ion batteries*

*If you are using this machine with a battery pack that is 4.0 Ah or greater you must install the included quick-release harness for proper support and balance.

Appropriate Temperature Ranges

Charge/store the battery pack at	5°C (41°F) to 40°C (104°F)*
Use the battery pack at	-30°C (-22°F) to 49°C (120°F)*
Use the tool at	0°C (32°F) to 49°C (120°F)*

*Charging time will increase if you do not charge the battery within this range.

Store the tool, battery pack, and battery charger in an enclosed clean, dry area.

Attachments/Accessories

A selection of Toro approved attachments and accessories is available for use with the machine to enhance and expand its capabilities. Contact your Authorized Service Dealer or authorized Toro distributor or go to www.Toro.com for a list of all approved attachments and accessories.

To ensure optimum performance and continued safety certification of the machine, use only genuine Toro replacement parts and accessories. Replacement parts and accessories made by other manufacturers could be dangerous.

Operation

Before Using the Pole Saw

Before using the pole saw, do the following:

- Check the chain tension; refer to Adjusting the Chain Tension (page 31).
- Clean the pole saw components, inspect them for excessive wear or damage, and replace them as needed; refer to Servicing the Guide Bar, Chain, and Drive Sprocket (page 34).
- Check the chain for sharpness and damage, and sharpen or replace as needed; refer to Sharpening the Chain (page 37).
- Check the oil level; refer to Checking the Oil Level and Adding Bar and Chain Oil (page 29).
- Check the pole saw for damage, general appearance, and performance; ensure that the switches move freely, the vents and handles are clean, and the bar is not bent or damaged.

Starting the Pole Saw

1. Ensure that the vents on the pole saw are free from dust and debris (Figure 9).

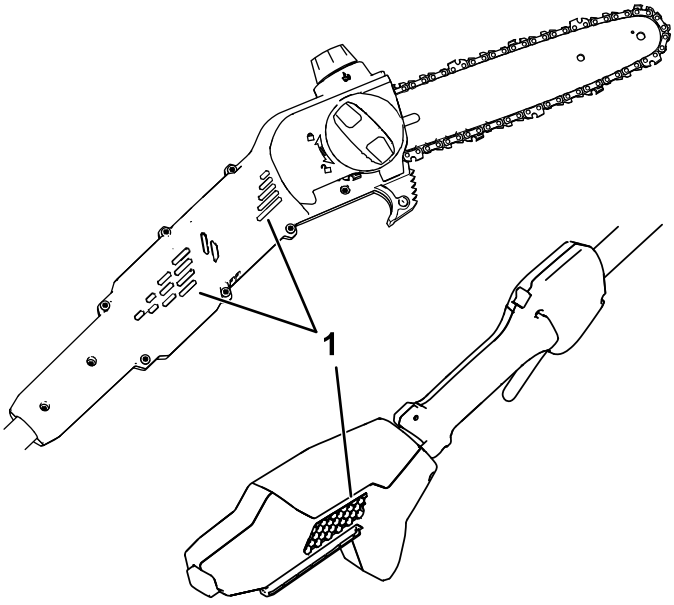

g374231

Figure 9

1. Vents

2. Set the pole saw down on a level surface.
3. Align the cavity in the battery pack with the tongue on the handle housing (Figure 10).

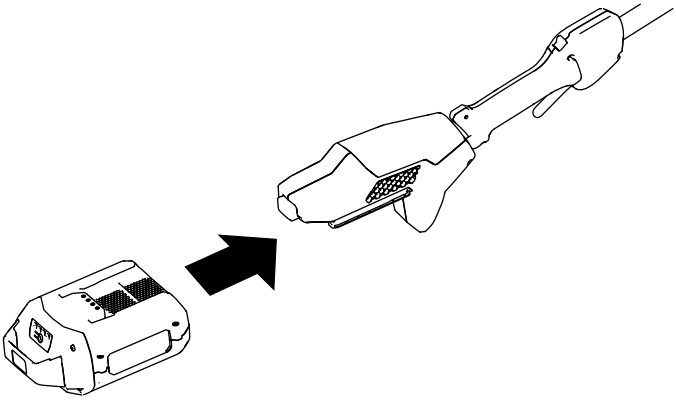

g374232

Figure 10

4. Push the battery pack into the handle until the battery pack locks into place.
5. Remove the guide bar cover from the chain.
6. Press the trigger lock, then press the trigger to start the pole saw.

Shutting Off the Pole Saw

To shut off the pole saw, release the trigger.

Whenever you are not using the saw or are transporting the saw to or from the work area remove the battery pack; refer to Removing the Battery Pack (page 28).

Cutting with the Pole Saw

⚠ WARNING

Operating a pole saw improperly can cause serious personal injury or death.

Read and follow all operating instructions carefully to avoid possible personal injury.

⚠ WARNING

Do not operate near electrical power lines; the pole saw has not been designed to provide protection from electric shock in the event of contact with overhead electric lines,

Consult local regulations for safe distances from overhead electric power lines and ensure that the operating position is safe and secure before operating the pole saw.

⚠ WARNING

Kickback can cause serious or fatal injury to you.

Avoid touching objects to be cut with the nose of the pole saw guide bar.

There are 2 types of kickback:

- A fast **upward** motion of the pole saw that results when the chain at the nose or top of the bar contacts an object
- A fast **backward** motion of the pole saw that results when the chain at the nose or top of the bar is pinched by the object being cut

Figure 11 shows the area of the bar to avoid contacting an object to prevent kickback.

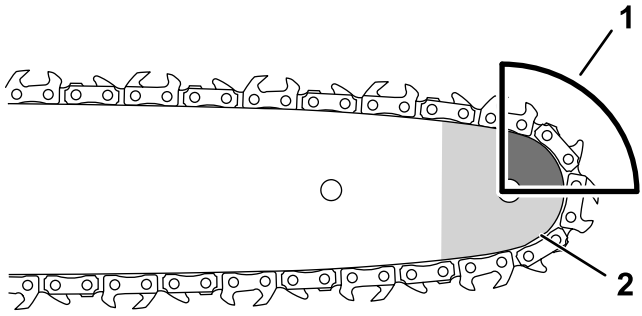

g318677

Figure 11

1. Kickback area (nose, top of the bar)
2. Nose

---

1. Grip the pole saw with 2 hands.
2. Stand on solid, even ground in front of the tree to be trimmed and position yourself for balanced, stable footing while cutting.
3. Ensure that you only cut the wood that you intend to cut; do not allow the saw chain to contact the earth, other logs, or any other objects when cutting.
4. Ensure that the saw chain is rotating at full speed before starting a cut.
5. Cut with the branch near the rear of the guide bar, close to the cutting guide; press the saw chain lightly against the wood and allow the weight of the pole saw to drive the cutting (Figure 12).

   Important: **If the chain binds in the cut, do not attempt to free it by running the motor. Shut off the pole saw, remove the battery, and lift the limb while holding the saw; this should release the pinch and free the pole saw.**

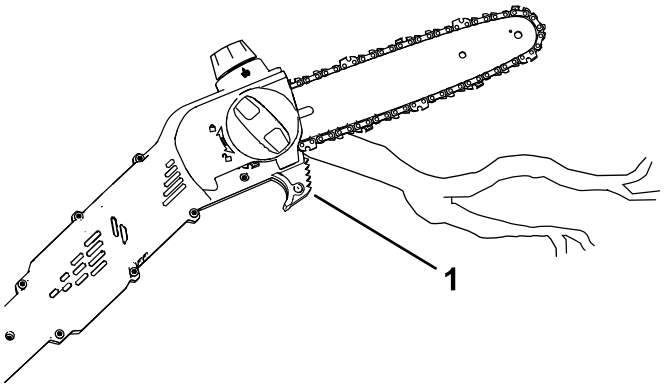

g374233

Figure 12

1. Cutting guide

6. Keep steady pressure on the pole saw, cutting in a straight line, and release pressure only near the end of the cut.
7. Release the trigger as soon as you complete a cut.

Pruning a Tree

⚠ WARNING

Cutting higher limbs from a tree off the ground can put you in an unstable position that could be unsafe for you while handling a pole saw, resulting in possible serious personal injury or death to you or bystanders.

When cutting limbs from a standing tree, use the following practices:

- **Do not climb on limbs or branches with a pole saw.**
- **Do not overreach, and cut with both hands on the pole saw.**
- **Ensure that all bystanders are away from the area where branches may fall.**

1. Grip the pole saw as described in Cutting with the Pole Saw (page 24).
2. While cutting small branches, apply light pressure to the branch to be cut.
3. While cutting larger branches, make a shallow undercut and then complete the cut from the topside of the branch.

A. Cut from the underside of the limb about 15 cm (6 inches) from the trunk. Cut a third of the way through the limb.

B. Cut 5.0 to 10.0 cm (2 to 4 inches) farther out on the limb and from above. Cut the limb until it falls.

C. Cut the limb stub at the branch collar (Figure 13).

Important: **Do not cut the limb past the collar, flush to the trunk, or leave a large limb stub; this damages the tree.**

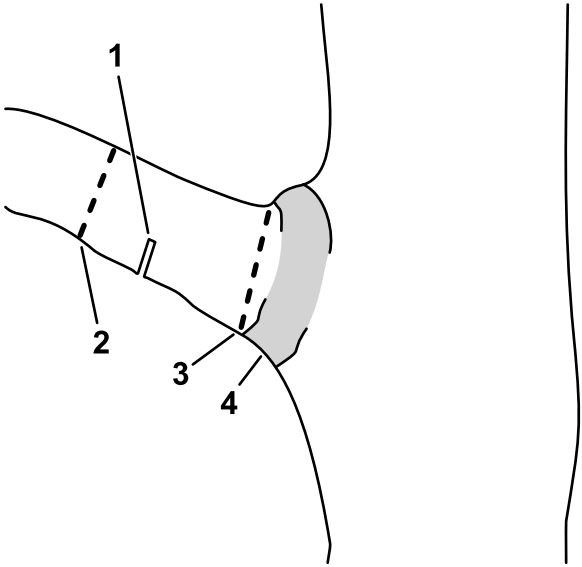

Figure 13

1. First relief undercut
2. Second through cut
3. Final pruning cut to remove the limb stub
4. Branch collar (where the trunk transitions to the limb)

Removing the Battery Pack

1. Place the pole saw on a flat surface.
2. Press down on the latch button and remove the battery pack from the handle.

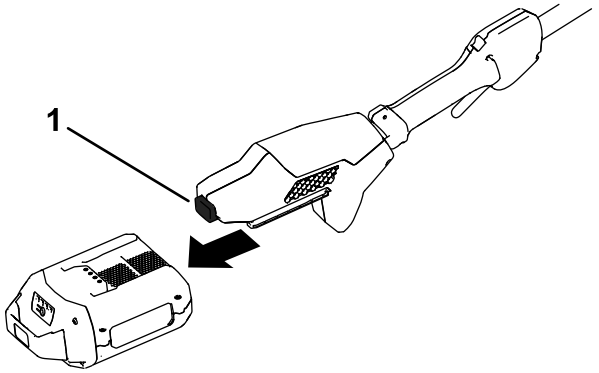

g374234

Figure 14

1. Latch button

Maintenance

Recommended Maintenance Schedule(s)

Maintenance Service Interval	Maintenance Procedure
Before each use or daily	• Check the oil level and add bar and chain oil if necessary. • Check that oil is flowing to the chain. • Check the chain tension and adjust it if necessary. • Ensure that the bar is straight and undamaged • Check the chain for sharpness; contact an Authorized Service Dealer to have the chain sharpened or replaced.
After each battery drain cycle	• Check the oil level and add bar and chain oil if necessary. • Check the chain tension and adjust it if necessary.
Yearly or before storage	• Service the guide bar, chain, and drive sprocket. • Check the chain for sharpness; contact an Authorized Service Dealer to have the chain sharpened or replaced.

Checking the Oil Level and Adding Bar and Chain Oil

Service Interval: Before each use or daily

After each battery drain cycle

Important: **Use only bar and chain oil (sold separately).**

1. Shut off the pole saw and remove the battery pack; refer to Removing the Battery Pack (page 28).
2. Check the oil level in the window. If the oil does not fill the window, add bar and chain oil as needed (Figure 15).

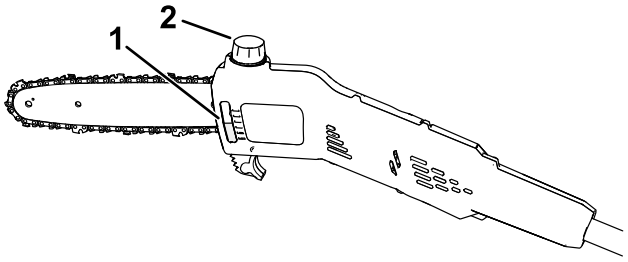

g374235

Figure 15

1. Oil window
2. Oil cap

3. Place the pole saw on a flat surface with the oil cap facing up.
4. Clean the area around the oil cap (Figure 15).

   Note: Ensure that you do not allow debris/wood chips to enter the oil tank.
5. Remove the cap, and pour bar and chain oil into the pole saw until the oil fills the tank (Figure 15).

   Important: **Do not fill the pole saw higher than the bottom of the fill neck.**
6. Clean up any spilled oil and secure the oil cap.
7. Ensure that oil is flowing to the chain; refer to Checking the Flow of Bar and Chain Oil (page 30).

Checking the Flow of Bar and Chain Oil

Service Interval: Before each use or daily

1. Prepare to use the pole saw; refer to Before Using the Pole Saw (page 21).
2. To ensure that oil is flowing to the chain, point the nose of the pole saw a few inches from a surface (e.g. paper, cardboard, a stump) and run the pole saw; you should be able to see a light spray of oil on the surface (Figure 16).

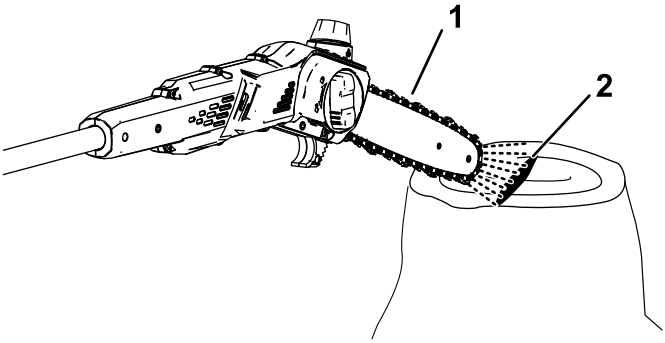

g374236

Figure 16

1. Run the pole saw a few inches from a surface.
2. If the oil is flowing, it will spray off the chain and accumulate.

3. If oil is not flowing, ensure that there is oil in the tank and that the area under the side cover is clean; refer to Checking the Oil Level and Adding Bar and Chain Oil (page 29) and Servicing the Guide Bar, Chain, and Drive Sprocket (page 34).

Adjusting the Chain Tension

Service Interval: Before each use or daily

After each battery drain cycle

Ensure that the chain is properly tensioned.

A loose chain shortens the life of the drive sprocket and the guide bar and may cause the chain to fall off.

An overtightened chain overheats the guide bar and chain, causing rapid wear, and may burn out the motor or break the chain.

The chain tension is correct when you are able to use a gloved hand to pull the chain smoothly around the guide bar. The chain should remain in contact with the bottom edge of the guide bar.

Also, check the chain tension of a new chain after a few cuts; a new chain usually stretches and requires adjustment after a few cuts.

⚠ DANGER

Contact with the pole saw teeth can cause serious personal injury.

- **Remove the battery pack before adjusting or maintaining the pole saw.**
- **Always wear gloves when adjusting or maintaining the pole saw.**

1. Place the pole saw on a level surface and remove the battery pack; refer to Removing the Battery Pack (page 28).
2. Allow the saw chain to cool.

   Important: **Do not tension a hot chain; it may contract as it cools, resulting in an overtightened chain.**
3. Inspect the guide bar for bends or damage, replace if necessary.
4. Turn the bar cover knob counterclockwise to loosen the bar cover, but do not remove it (Figure 17).

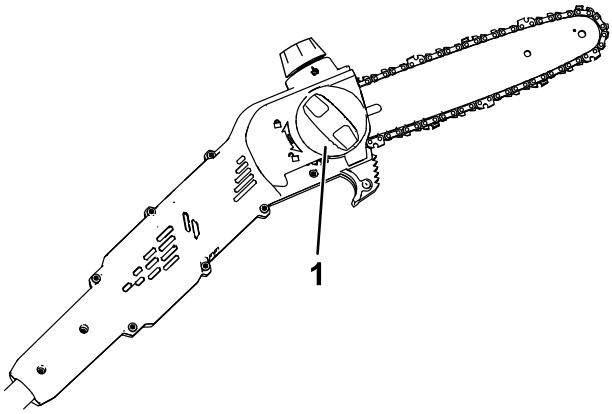

g374237

Figure 17

1. Bar cover knob

5. Adjust the chain tension using the chain tensioning screw (Figure 18), and then secure the side cover to the pole saw by turning the bar cover knob clockwise before checking the tension (Figure 17).
   - **To tighten the chain,** turn the chain tensioning screw clockwise.
   - **To loosen the chain,** turn the chain tensioning screw counterclockwise.

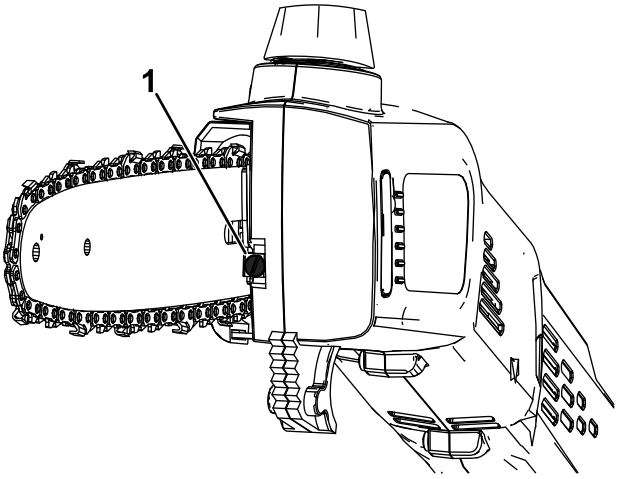

g374238

Figure 18

1. Chain tensioning screw

Adjust the chain tension until the chain touches the bottom edge of the guide bar, then pull the chain away from the bottom edge of the guide bar; a properly adjusted chain can only be pulled 3.2 to 6.4 mm (1/8 to 1/4 inch) away from the guide bar, and snaps back on release.

Note: While adjusting the chain tension, lift up the tip of the guide bar with a gloved hand to ensure the guide bar does not sag and affect chain tension.

6. Use a gloved hand to pull the chain around the guide bar. A properly tensioned chain should move smoothly and remain in contact with the bottom edge of the guide bar.
7. If the chain is not properly tensioned, repeat steps 4 through 7.

Servicing the Guide Bar, Chain, and Drive Sprocket

Yearly or before storage

⚠ DANGER

Contact with the pole saw teeth can cause serious personal injury.

- **Remove the battery pack before adjusting or maintaining the pole saw.**
- **Always wear gloves when adjusting or maintaining the pole saw.**

1. Place the pole saw on a flat surface and remove the battery pack; refer to Removing the Battery Pack (page 28).
2. Remove the side cover; turn the bar cover knob counterclockwise until the knob is removed and then remove the side cover (Figure 19).

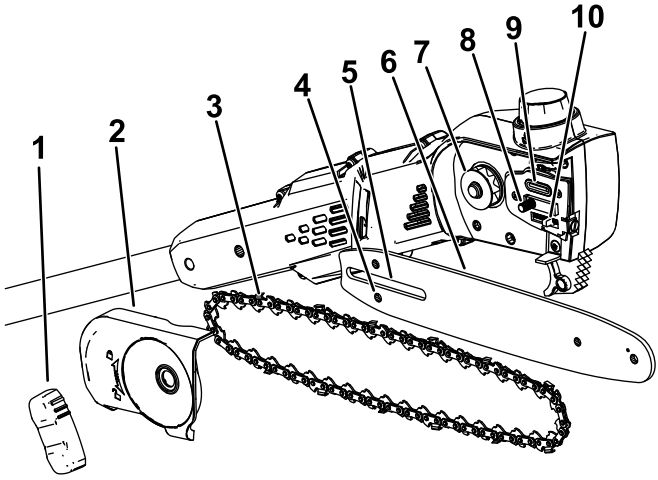

g374226

Figure 19

1. Bar cover knob
2. Side cover
3. Chain
4. Chain adjusting stud slot
5. Guide bar slot
6. Guide bar
7. Drive sprocket
8. Guide bar stud
9. Oil outlet
10. Chain adjusting stud

3. Loosen the chain by turning the chain-tightening screw counterclockwise (Figure 18).
4. Separate the chain from the guide bar and set them aside.
5. Clean any debris from the area under the side cover.
6. Inspect the drive sprocket; if it is excessively worn or damaged, replace it; contact your authorized service dealer.
7. Check the oil outlet (Figure 19) for debris and clean the area if necessary.
8. Clean the guide bar and chain; use a wire or a small flat-head screwdriver to remove dirt and debris from the groove along the edge of the guide bar, starting from the sprocket on the front end and moving rearward.

   Ensure that the oil channel in the bar that aligns with the oil outlet on the pole saw is clean so that oil can flow freely to the chain (Figure 20).

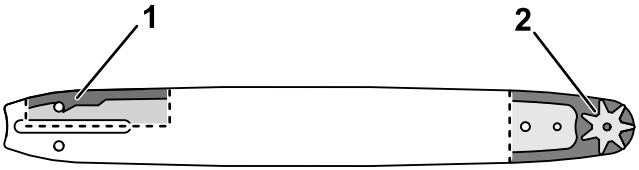

g315856

Figure 20

Internal sections of the guide bar shown

1. Ensure that this channel connecting to the oil outlet is clean.
2. Ensure that the bar sprocket is clean and rotates freely.

9. Inspect the guide bar and chain; if the bar is bent, the grooves are damaged, or if the sprocket on the front end does not rotate freely, replace the guide bar; if the chain is excessively worn or damaged, replace it.
10. Install the guide bar and chain; refer to Installing the Guide Bar and Chain (page 36).
11. Ensure that oil is flowing to the chain; refer to Checking the Flow of Bar and Chain Oil (page 30).

Installing the Guide Bar and Chain

⚠ DANGER

Contact with the pole saw teeth can cause serious personal injury.

- **Remove the battery pack before adjusting or maintaining the pole saw.**
- **Always wear gloves when adjusting or maintaining the pole saw.**

1. If the side cover is installed to the machine, remove it; refer to Servicing the Guide Bar, Chain, and Drive Sprocket (page 34).
2. Place the chain around the sprocket on the front end of the guide bar, **with the cutting edge of the chain teeth on the top of the bar facing forward** as shown in the diagram beneath the side cover of the pole saw.
3. Feed the chain around the guide bar and align the chain into the groove of the guide bar.

   Note: If you are installing a new chain, flip the guide bar to avoid uneven wear.
4. Position the open loop of the chain (not on the guide bar) around the drive sprocket on the pole saw and install the guide bar and attached chain onto the pole saw.

   Important: **Ensure that the chain adjusting stud is inserted into the chain adjusting stud slot on the guide bar (Figure 19). You may need to rotate the chain-tensioning screw to fit the stud into the hole in the guide bar.**
5. Install the side cover, but do not fully tighten the side cover knob.
6. Adjust the chain tension; refer to Adjusting the Chain Tension (page 31).

Sharpening the Chain

Yearly or before storage

A sharp chain ensures better cutting performance and longer battery life.

The chain needs to be sharpened or replaced if you must force it onto the wood, or if it produces sawdust instead of full wood chips.

Contact an Authorized Service Dealer to have the chain sharpened or replaced.

Service

Should the pole saw need service, take the tool to your Authorized Service Dealer.

Storage

Important: **Store the machine, battery pack, and charger only in temperatures that are within the appropriate range; refer to** **Specifications (page 19)****.**

Important: **If you are storing the battery pack for the off-season, charge it until 1 or 2 LED indicators turn green on the battery. Do not store a fully charged or fully depleted battery. When you are ready to use the machine again, charge the battery pack until the left indicator light turns green on the charger or all 4 LED indicators turn green on the battery.**

- Disconnect the machine from the power supply (i.e., remove the battery pack) and check for damage after use.
- Clean all foreign material from the machine.
- Do not store the machine with the battery pack installed.
- Store the machine, battery pack, and battery charger in a well-ventilated place that is inaccessible to children.
- Keep the machine, battery pack, and battery charger away from corrosive agents such as garden chemicals and de-icing salts.
- To reduce the risk of serious personal injury, do not store the battery pack outside or in vehicles.
- Store the machine, battery pack, and battery charger in an enclosed clean, dry area.

Preparing the Battery Pack for Recycling

Important: **Upon removal, cover the terminals of the battery pack with heavy-duty adhesive tape. Do not attempt to destroy or disassemble the battery pack or remove any of its components.**



Contact your local municipality or your authorized Authorized Service Dealer or distributor for more information on how to responsibly recycle the battery.

	Lithium-ion battery packs labeled with the Call2Recycle seal can be recycled at any participating retailer or battery recycling facility in the Call2Recycle program (US and Canada only). To locate a participating retailer or facility closest to you, please call 1-800-822-8837 or visit www.call2recycle.org.
	Lithium-ion battery packs labeled with the High Energy Battery (HEB) seal shown here, and any 60V Flex-Force batteries 6.0 Ah or greater, can be recycled at any participating dealer or retailer in the Call2Recycle HEB program. To locate a participating dealer or retailer closest to you, please visit www.hebattery.org.

If you cannot locate a participating retailer or facility nearby, or have questions about which recycling program your battery pack may qualify for, please visit the customer support site listed in the operator's manual for your tool/equipment for more information on how to responsibly recycle the battery pack.

If you are located outside of the US and Canada, please contact your Authorized Service Dealer or distributor for more information on how to responsibly recycle the battery pack.

Troubleshooting

Perform only the steps described in these instructions. All further inspection, maintenance, and repair work must be performed by an authorized service center or a similarly qualified specialist if you cannot solve the problem yourself.

Always remove the battery from the tool when troubleshooting, inspecting, maintaining, or cleaning the tool.

Problem	Possible Cause	Corrective Action
The pole saw does not run or does not run continuously.	1. The battery pack is low on charge.	1. Charge the battery pack.
	2. The battery pack is not fully seated.	2. Ensure that the battery pack is inserted all the way into the housing.
	3. The battery pack is over or under the appropriate temperature range.	3. Move the battery pack to a place where it is dry and the temperature is between 5°C (41°F) and 40°C (104°F).
	4. The battery pack has exceeded high amperage limits.	4. Release the trigger, then press the trigger switch.
	5. There is moisture on the leads of the battery pack.	5. Allow the battery pack to dry or wipe it dry.
	6. There is debris under the cover.	6. Remove the cover and clean out any debris.
The pole saw runs, but the chain does not rotate.	1. The chain is not properly seated on the drive sprocket.	1. Install the chain and ensure that the links are properly seated in the drive sprocket.
	2. There is debris under the cover.	2. Remove the cover and clean out any debris.

Problem	Possible Cause	Corrective Action
The pole saw does not properly cut.	1. The chain is not tensioned correctly. 2. The chain is dull or damaged. 3. The guide bar is bent or the grooves are damaged. 4. The chain is installed backward. 5. The chain is not being lubricated properly.	1. Set the proper tension on the chain. 2. Replace the chain. 3. Replace the guide bar 4. Install the chain correctly. 5. Check the oil level and ensure that oil is flowing to the chain.
The chain oil is not lubricating properly.	1. The oil level is low. 2. The oil outlet is plugged. 3. There is debris under the cover. 4. The oil channel or groove in the guide bar is plugged.	1. Check the oil level. 2. Clean out debris from the oil outlet. 3. Remove the cover and clean out any debris. 4. Clean out debris in the bar.