Form No. 3480-326 Rev A

TORO

Count on it.

Operator's Manual

Flex-Force Power System® 60V 750 CMF 2.5 AH Leaf Blower

Model No. 51826—Serial No. 326000000 and Up

Model No. 51826T—Serial No. 326000000 and Up

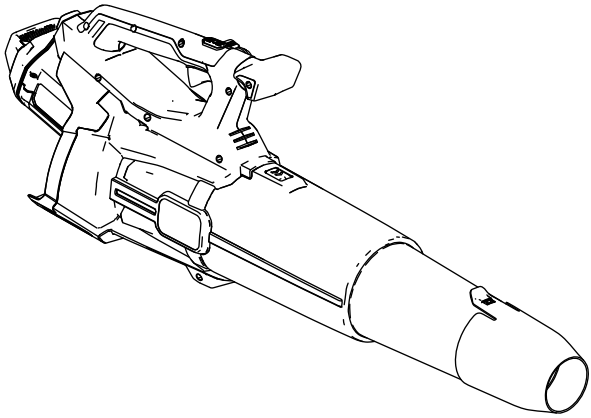

Register at www.Toro.com.
Original Instructions (EN)

3480-326

For assistance, please see www.Toro.com/support for instructional videos or contact your Authorized Service Dealer before returning this product.

⚠ WARNING

CALIFORNIA
Proposition 65 Warning

The power cord on this product contains lead, a chemical known to the State of California to cause birth defects or other reproductive harm. Wash hands after handling.

Use of this product may cause exposure to chemicals known to the State of California to cause cancer, birth defects, or other reproductive harm.

Introduction

This blower is intended to be used by residential homeowners to move leaf-like debris as needed outdoors. It is designed to use Flex-Force™ 60V lithium-ion battery packs. These battery packs are designed to be charged only by Flex-Force 60V lithium-ion battery chargers. Using these products for purposes other than their intended use could prove dangerous to you and bystanders.

Model 51826T does not include a battery or a charger.

Read this information carefully to learn how to operate and maintain your product properly and to avoid injury and product damage. You are responsible for operating the product properly and safely.

© 2026—The Toro® Company
8111 Lyndale Avenue South
Bloomington, MN 55420

Register at www.Toro.com.

Original Instructions (EN)
Printed in Vietnam
All Rights Reserved

3480-326

Visit www.Toro.com for more information, including safety tips, training materials, accessory information, help finding a dealer, or to register your product.

Whenever you need service, genuine Toro parts, or additional information, contact an Authorized Service Dealer or Toro Customer Service and have the model and serial numbers of your product ready. Figure 1 identifies the location of the model and serial numbers on the product. Write the numbers in the space provided.

Important: **With your mobile device, you can scan the QR code (if equipped) on the serial number plate to access warranty, parts, and other product information.**

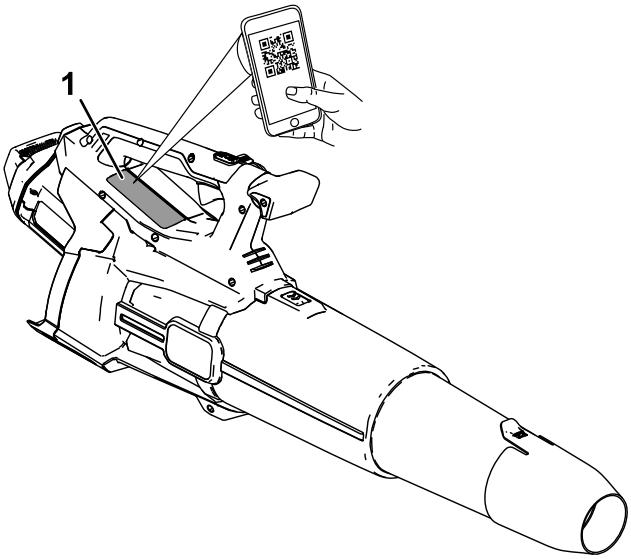

g506817

Figure 1

1. Model and serial number location.

Model No. _____

Serial No. _____

Safety-Alert Symbol

The safety-alert symbol (Figure 2) shown in this manual and on the machine identifies important safety messages that you must follow to prevent accidents.

g000502

Figure 2
Safety-alert symbol

The safety-alert symbol appears above information that alerts you to unsafe actions or situations and is followed by the word **DANGER**, **WARNING**, or **CAUTION**.

DANGER indicates an imminently hazardous situation which, if not avoided, **will** result in death or serious injury.

WARNING indicates a potentially hazardous situation which, if not avoided, **could** result in death or serious injury.

CAUTION indicates a potentially hazardous situation which, if not avoided, **may** result in minor or moderate injury.

This manual uses two other words to highlight information. **Important** calls attention to special mechanical information and **Note** emphasizes general information worthy of special attention.

Safety

⚠ WARNING

Read all safety warnings, instructions, illustrations and specifications provided with this machine.

Failure to follow all instructions listed below may result in electric shock, fire and/or serious injury.

Save all warnings and instructions for future reference.

The term “machine” in all the warnings refers to your mains-operated (corded) machine or battery-operated (cordless) machine.

I. Work area safety

1. **Keep work area clean and well lit.** *Cluttered or dark areas invite accidents.*
2. **Do not operate machines in explosive atmospheres, such as in the presence of flammable liquids, gases, or dust.** *Machines create sparks which may ignite the dust or fumes.*
3. **Keep children and bystanders away while operating a machine.** *Distractions can cause you to lose control.*

II. Electrical safety

1. **Machine plugs must match the outlet. Never modify the plug in any way. Do not use any adapter plugs with earthed (grounded) machines.** *Unmodified plugs and matching outlets will reduce risk of electric shock.*
2. **Avoid body contact with earthed or grounded surfaces, such as pipes, radiators, ranges and refrigerators.** *There is an increased risk of electric shock if your body is earthed or grounded.*
3. **Do not expose machines to rain or wet conditions.** *Water entering a machine will increase the risk of electric shock.*
4. **Do not abuse the cord. Never use the cord for carrying, pulling or unplugging the machine. Keep cord away from heat, oil, sharp edges or moving parts.** *Damaged or entangled cords increase the risk of electric shock.*
5. **When operating a machine outdoors, use an extension cord suitable for outdoor use.** *Use of a cord suitable for outdoor use reduces the risk of electric shock.*
6. **If operating a machine in a damp location is unavoidable, use a residual current device (RCD) protected supply.** *Use of an RCD reduces the risk of electric shock.*

III. Personal safety

1. **Stay alert, watch what you are doing and use common sense when operating a machine. Do not use a machine while you are tired or under the influence of drugs, alcohol, or medication.** *A moment of inattention while operating machines may result in serious personal injury.*
2. **Use personal protective equipment. Always wear eye protection.** *Protective equipment such as a dust mask, non-skid safety shoes, hard hat, or hearing protection used for appropriate conditions reduces personal injuries.*
3. **Prevent unintentional starting. Ensure the switch is in the OFF-position before connecting to power source and/or battery**

pack, picking up or carrying the tool. *Carrying machines with your finger on the switch or energizing machines that have the switch on invites accidents.*

4. **Remove any adjusting key or wrench before turning the machine on.** *A wrench or a key left attached to a rotating part of the machine may result in personal injury.*

5. **Do not overreach. Keep proper footing and balance at all times.** *This enables better control of the machine in unexpected situations.*

6. **Dress properly. Do not wear loose clothing or jewelry. Keep your hair and clothing away from moving parts.** *Loose clothes, jewelry, or long hair can be caught in moving parts.*

7. **If devices are provided for the connection of dust extraction and collection facilities, ensure these are connected and properly used.** *Use of dust collection can reduce dust-related hazards.*

8. **Do not let familiarity gained from frequent use of tools allow you to become complacent and ignore tool safety principles.** *A careless action can cause severe injury within a fraction of a second.*

IV. Machine use and care

1. **Do not force the machine. Use the correct machine for your application.** *The correct machine will do the job better and safer at the rate for which it was designed.*

2. **Do not use the machine if the switch does not turn it on and off.** *Any machine that cannot be controlled with the switch is dangerous and must be repaired.*

3. **Disconnect the plug from the power source and/or remove the battery pack, if detachable, from the machine before making any adjustments, changing accessories, or storing machines.** *Such preventive safety measures reduce the risk of starting the machine accidentally.*

4. **Store idle machines out of the reach of children and do not allow persons unfamiliar with the machine or these instructions to operate the machine.** *Machines are dangerous in the hands of untrained users.*

5. **Maintain machines and accessories. Check for misalignment or binding of moving parts, breakage of parts, and any other condition that may affect the machine's operation. If damaged, have the machine repaired before use.** *Many accidents are caused by poorly maintained machines.*

6. **Keep cutting tools sharp and clean.** *Properly maintained cutting tools with sharp cutting edges are less likely to bind and are easier to control.*
7. **Use the machine, accessories, and tool bits etc. in accordance with these instructions, taking into account the working conditions and the work to be performed.** *Use of the machine for operations different from those intended could result in a hazardous situation.*
8. **Keep handles and grasping surfaces dry, clean and free from oil and grease.** *Slippery handles and grasping surfaces do not allow for safe handling and control of the tool in unexpected situations.*

V. Battery tool use and care

1. **Recharge only with the charger specified by the manufacturer.** *A charger that is suitable for one type of battery pack may create a risk of fire when used with another battery pack.*
2. **Use machines only with specifically designated battery packs.** *Use of any other battery packs may create a risk of injury and fire.*
3. **When battery pack is not in use, keep it away from other metal objects, like paper clips, coins, keys, nails, screws or other small metal objects, that can make a connection from one terminal to another.** *Shorting the battery terminals together may cause burns or a fire.*
4. **Under abusive conditions, liquid may be ejected from the battery; avoid contact. If contact accidentally occurs, flush with water. If liquid contacts eyes, additionally seek medical help.** *Liquid ejected from the battery may cause irritation or burns.*
5. **Do not use a battery pack or tool that is damaged or modified.** *Damaged or modified batteries may exhibit unpredictable behavior resulting in fire, explosion or risk of injury.*
6. **Do not expose a battery pack or tool to fire or excessive temperature.** *Exposure to fire or temperature above 130 °C (265 °F) may cause explosion.*
7. **Follow all charging instructions and do not charge the battery pack or tool outside the temperature range specified in the instructions.** *Charging improperly or at temperatures outside the specified range may damage the battery and increase the risk of fire.*

VI. Service

1. **Have your machine serviced by a qualified repair person using only identical replacement parts.** *This will ensure that the safety of the machine is maintained.*

2. **Never service damaged battery packs.** *Service of battery packs should only be performed by the manufacturer or authorized service providers.*

VII. Blower safety

1. **Do not use the machine in bad weather conditions, especially when there is a risk of lightning.** *This decreases the risk of being struck by lightning.*
2. **Wear eye protection and ear protection.** *Adequate protective equipment will reduce the risk of personal injury.*
3. **While operating the machine, always wear non-slip and protective footwear. Do not operate the machine when barefoot or wearing open sandals.** *This reduces the risk of injury to the feet.*
4. **Do not wear loose fitting clothing or articles such as scarves, strings, chains, ties, etc., that could get drawn into the air inlets. Tie back or cover long hair to make sure it does not get drawn into the air inlets.** *If any of these items are drawn into the air inlets, it can increase the risk of personal injury.*
5. **Keep bystanders away while operating the machine.** *Thrown debris can increase the risk of personal injury.*
6. **Never point the blower nozzle in the direction of people or pets or in the direction of windows. Use extra caution when blowing debris near solid objects, such as trees, automobiles and walls that can cause debris to ricochet.** *Thrown objects can damage property and increase the risk of personal injury.*
7. **Do not use the machine to blow anything that is burning or smoking, such as cigarettes, matches or hot ashes.** *These ignition sources may increase the risk of fire.*
8. **Do not touch the fan while still in motion. Turn off the machine and wait until the fan stops before removing any part that may give access to the fan.** *This reduces the risk of injury from moving parts.*
9. **When clearing jammed material or servicing the machine, make sure the power switch is off.** *Unexpected starting of the machine while clearing jammed material or servicing may result in serious personal injury.*

Decal Symbols

Safety decals and instructions are easily visible to the operator and are located near any area of potential danger. Replace any decal that is damaged or missing.

The following tables describe the safety and instructional symbols that appear on the decals.

Blower Decal Symbol	Explanation
	Thrown objects hazard
	Warning
	Do not operate in wet conditions.
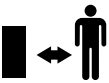	Keep bystanders away.
	Keep bystanders away from the machine in all directions.
	Stay away from moving parts.
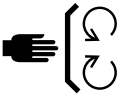	Keep all guards and shields in place.
	Read the *Operator's Manual*.
	Remove the battery pack before performing maintenance.
	Wear eye and ear protection.

Setup

Important: **The battery pack is not fully charged when you purchase it. Before using the tool for the first time, refer to Charging the Battery Pack (page 18).**

Mounting the Battery Charger (Optional)

If desired, mount the battery charger securely on a wall using the wall-mount key holes on the back of the charger.

Mount it indoors (such as a garage or other dry place), near a power outlet, and out of the reach of children.

Refer to Figure 3 for assistance in mounting the charger.

Slide the charger over the appropriately positioned hardware to secure the charger in place (hardware not included).

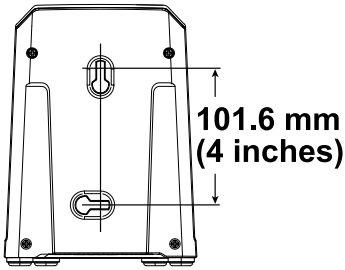

g290534

Figure 3

Assembling the Blower

1. Install the blower nozzle to the blower tube.

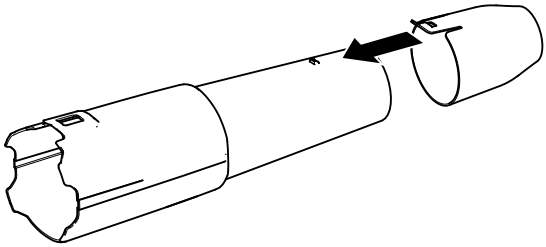

g472735

Figure 4

2. Slide the blower tube onto the blower housing. You may need to press down on the tube latch for the blower tube to lock into place (Figure 5).

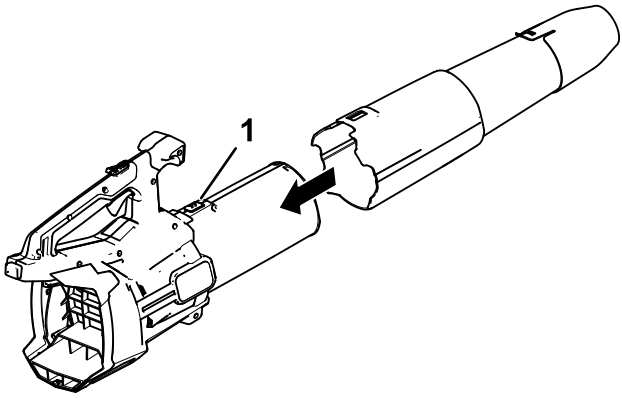

g472734

Figure 5

1. Tube latch

Note: The blower can also be operated without the nozzle, or with the blower tube removed completely.

Product Overview

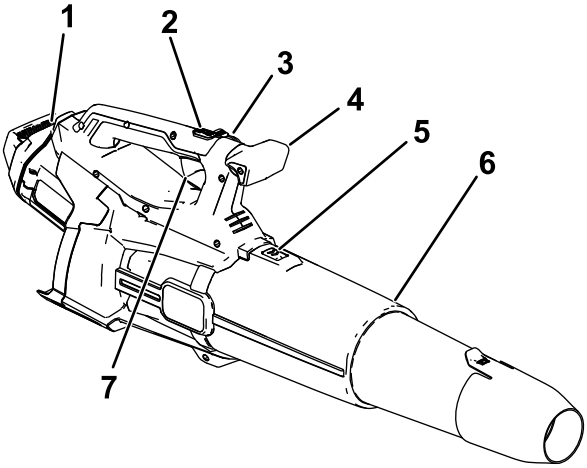

g506818

Figure 6

1. Battery and battery cavity
2. Turbo boost button
3. Speed lock
4. Handle knob
5. Blower tube latch
6. Blower tube
7. Variable-speed trigger

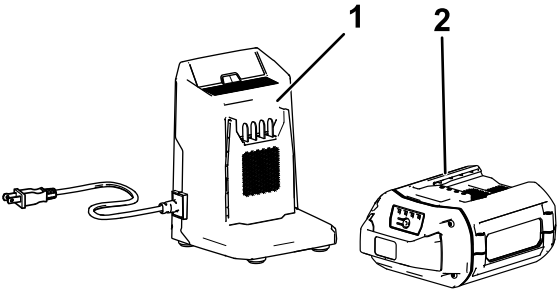

g362427

Figure 7

1. 2.0 Ah battery charger (included with Model 51826)
2. 2.5Ah battery pack (included with Model 51826)

Specifications

Model	51826, 51826T
Rated Voltage	60V DC maximum, 54 VDC nominal usage
Charger Type	Flex-Force 60V lithium-ion chargers
Battery Type	Flex-Force 60V lithum-ion batteries

Appropriate Temperature Ranges

Charge/ store the battery pack at	5°C (41°F) to 40°C (104°F)*
Use the battery pack at	-30°C (-22°F) to 49°C (120°F)
Use the blower at	0°C (32°F) to 49°C (120°F)

*Charging time will increase if you do not charge the battery within this range.

Store the tool, battery pack, and battery charger in an enclosed clean, dry area.

Attachments/Accessories

A selection of Toro approved attachments and accessories is available for use with the machine to enhance and expand its capabilities. Contact your Authorized Service Dealer or authorized Toro distributor or go to www.Toro.com for a list of all approved attachments and accessories.

To ensure optimum performance and continued safety certification of the machine, use only genuine Toro replacement parts and accessories. Replacement parts and accessories made by other manufacturers could be dangerous.

Operation

⚠ WARNING

The blower can throw debris, possibly causing serious personal injury to you or bystanders.

- **Do not blow hard objects, such as nails or bolts.**
- **Do not operate the blower near bystanders or pets.**
- **Be careful of blowing direction (i.e., blow away from bystanders, windows, automobiles, etc.). Only use as much speed as required.**
- **Use extra care when cleaning debris from stairs or other tight areas.**

Starting the Blower

Important: **Use the battery pack only in temperatures that are within the appropriate range; refer to Specifications (page 13).**

1. Ensure that the vents on the blower are clear of any dust and debris.
2. Align the cavity on the battery pack with the tongue in the handle housing (Figure 8).
3. Grasp the handle, and push the battery pack into the handle until the latch locks into place (Figure 8).

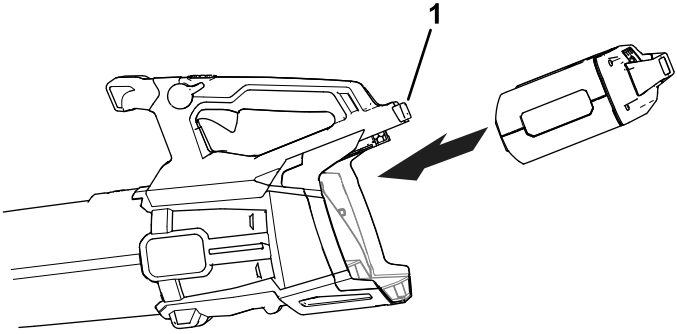

g506820

Figure 8

1. Battery latch

4. To start the blower, squeeze the variable-speed trigger (Figure 9).

   Note: Engage the speed lock to keep the machine on without pressing the variable-speed trigger (Figure 9).

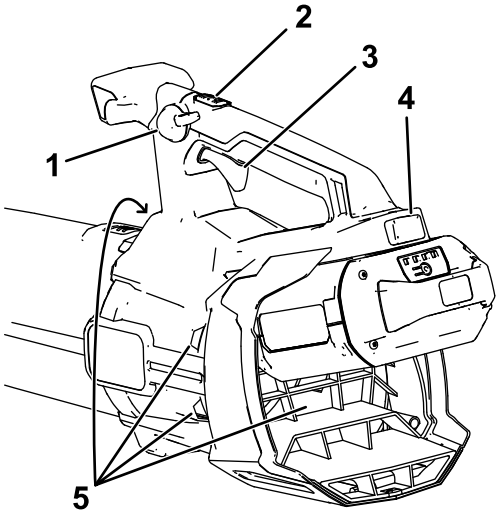

g506819

Figure 9

1. Speed lock
2. Turbo boost button
3. Variable-speed trigger
4. Battery latch
5. Blower venting areas

Adjusting the Air Speed of the Blower

To adjust the air speed as you blow, use the variable-speed trigger (Figure 9).

To maintain the current air speed, engage the speed lock (Figure 9).

To achieve maximum performance, depress the variable-speed trigger, then press the turbo boost button to turn boost on (Figure 9).

To turn boost off, press the turbo boost button again or completely release the variable speed trigger.

Shutting Off the Blower

To shut off the blower, disengage the speed lock (if in use) and release the variable-speed trigger (Figure 9).

Important: **After stopping the blower, do not leave the speed lock engaged with the battery pack in the blower.**

Whenever you are not using the blower or are transporting the blower to or from the work area, remove the battery pack.

Removing the Blower Tube

Press down on the tab latch to separate the blower tube from the blower (Figure 10).

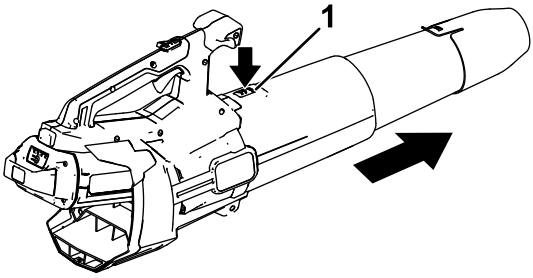

g472738

Figure 10

1. Tube latch

Removing the Battery from the Blower

Press the battery latch to release the battery pack and slide the battery pack out of the blower (Figure 11).

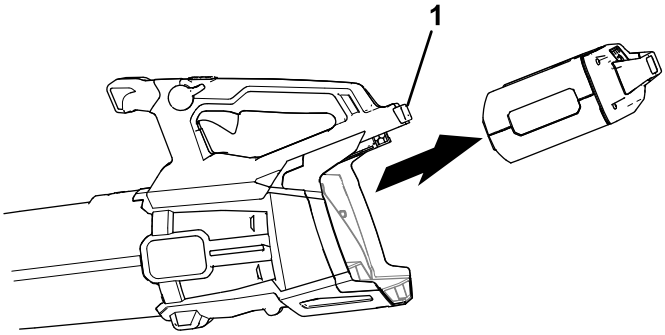

g506821

Figure 11

1. Battery latch

Charging the Battery Pack

Important: **The battery pack is not fully charged when you purchase it. Before using the tool for the first time, place the battery pack in the charger and charge it until the LED display indicates the battery pack is fully charged. Read all safety precautions.**

Important: **Charge the battery pack only in temperatures that are within the appropriate range; refer to Specifications (page 13).**

Note: At any time, press the battery-charge-indicator button on the battery pack to display the current charge (LED indicators).

1. Ensure that the vents and charging terminals on the battery pack and charger are clear of any dust and debris.

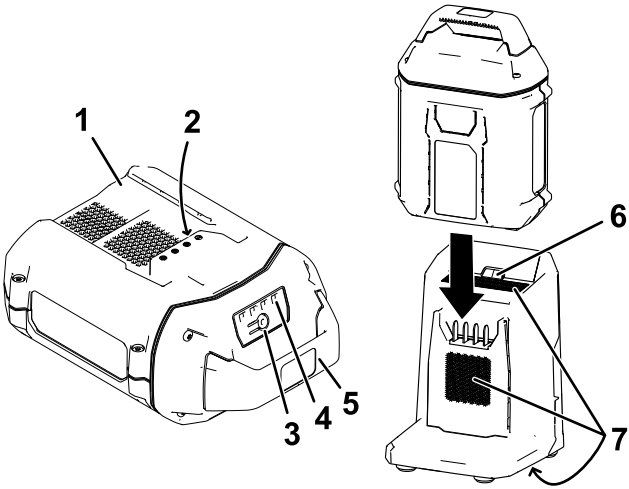

g473274

Figure 12

1. Battery-pack cavity
2. Battery-pack terminals
3. Battery-charge-indicator button
4. LED indicators (current charge)
5. Handle
6. Charger LED indicator light
7. Charger venting areas

2. Line up the cavity in the battery pack (Figure 12) with the tongue on the charger.
3. Slide the battery pack into the charger until it is fully seated (Figure 12).
4. To remove the battery pack, slide the battery backward out of the charger.

5. Refer to the following table to interpret the LED indicator light on the battery charger.

Battery Charge Status

Charger Symbol	Indicator Light	Indicates
	Green blinking	Battery pack is charging
100%	Green	Battery pack is charged
	Red	Battery pack and/or battery charger is over or under the appropriate temperature range
!	Red blinking	Battery pack charging fault*
	Off	No battery pack inserted

*Refer to Troubleshooting (page 22) for more information.

Important: **The battery pack can be left on the charger for short periods between uses.**

If the battery pack will not be used for longer periods, remove the battery pack from the charger; refer to Storage (page 20).

Storage

Important: **Store the machine, battery pack, and charger only in temperatures that are within the appropriate range; refer to** **Specifications (page 13)****.**

Important: **If you are storing the machine for a year or longer, remove the battery pack from the machine and charge the battery pack until 1 or 2 LED indicators turn green on the battery. Do not store a fully charged or fully depleted battery. When you are ready to use the machine again, charge the battery pack until the left indicator light turns green on the charger or all 4 LED indicators turn green on the battery.**

- Disconnect the machine from the power supply (i.e., remove the battery pack) and check for damage after use.
- Clean all foreign material from the machine.
- Do not store the machine or charger with the battery pack installed.
- When not in use, store the machine, battery pack, and battery charger out of the reach of children.
- Keep the machine, battery pack, and battery charger away from corrosive agents such as garden chemicals and de-icing salts.
- To reduce the risk of serious personal injury, do not store the battery pack outside or in vehicles.
- Store the machine, battery pack, and battery charger in an enclosed clean, dry area.

Preparing the Battery Pack for Recycling

Important: **Upon removal, cover the terminals of the battery pack with heavy-duty adhesive tape. Do not attempt to destroy or disassemble the battery pack or remove any of its components.**

Contact your local municipality or your authorized Authorized Service Dealer or distributor for more information on how to responsibly recycle the battery.

RECYCLE RBRC Li-ion 1.800.822.8837	Lithium-ion battery packs labeled with the Call2Recycle seal can be recycled at any participating retailer or battery recycling facility in the Call2Recycle program (US and Canada only). To locate a participating retailer or facility closest to you, please call 1-800-822-8837 or visit www.call2recycle.org.
END-OF-LIFE MANAGEMENT LITHIUM ION (Li-ion) HEBATTERY.ORG	Lithium-ion battery packs labeled with the High Energy Battery (HEB) seal shown here, and any 60V Flex-Force batteries 6.0 Ah or greater, can be recycled at any participating dealer or retailer in the Call2Recycle HEB program. To locate a participating dealer or retailer closest to you, please visit www.hebattery.org.

If you cannot locate a participating retailer or facility nearby, or have questions about which recycling program your battery pack may qualify for, please visit the customer support site listed in the operator's manual for your tool/equipment for more information on how to responsibly recycle the battery pack.

If you are located outside of the US and Canada, please contact your Authorized Service Dealer or distributor for more information on how to responsibly recycle the battery pack.

Troubleshooting

Perform only the steps described in these instructions. All further inspection, maintenance, and repair work must be performed by an authorized service center or a similarly qualified specialist if you cannot solve the problem yourself.

Always remove the battery from the tool when troubleshooting, inspecting, maintaining, or cleaning the tool.

Problem	Possible Cause	Corrective Action
The tool does not start.	1. The battery is not fully installed in the tool. 2. The battery pack is not charged. 3. The battery pack is damaged. 4. There is another electrical problem with the tool.	1. Remove and then replace the battery into the tool, making sure that it is fully installed and latched. 2. Remove the battery pack from the tool and charge it. 3. Replace the battery pack. 4. Contact an Authorized Service Dealer.
The tool does not reach full power.	1. The battery pack charge capacity is too low. 2. The air vents are blocked.	1. Remove the battery pack from the tool and fully charge the battery pack. 2. Remove the battery pack from the tool and clean the air vents.
The tool does not run or does not run continuously.	1. There is moisture on the leads of the battery pack. 2. The battery is not fully installed in the tool. 3. The battery pack is low on charge.	1. Allow the battery pack to dry or wipe it dry. 2. Remove and then replace the battery in the tool, ensuring that it is fully installed and latched. 3. Charge the battery pack.

Problem	Possible Cause	Corrective Action
The battery pack loses charge quickly.	1. The battery pack is over or under the appropriate temperature range.	1. Move the battery pack to a place where it is dry and the temperature is between 5°C (41°F) and 40°C (104°F).
The battery charger is not working.	1. The battery charger is over or under the appropriate temperature range. 2. The outlet that the battery charger is plugged into does not have power.	1. Unplug the battery charger and move it to a place where it is dry and the temperature is between 5°C (41°F) and 40°C (104°F). 2. Contact your licensed electrician to repair the outlet.
The LED indicator light on the battery charger is red.	1. The battery charger and/or battery pack is over or under the appropriate temperature range.	1. Unplug the battery charger and move the battery charger and battery pack to a place where it is dry and the temperature is between 5°C (41°F) and 40°C (104°F).
The LED indicator light on the battery charger is blinking red.	1. There is an error in the communication between the battery pack and the charger. 2. The battery pack is weak.	1. Remove the battery pack from the battery charger, unplug the battery charger from the outlet, and wait 10 seconds. Plug the battery charger into the outlet again and place the battery pack on the battery charger. If the LED indicator light on the battery charger is still blinking red, repeat this procedure again. If the LED indicator light on the battery charger is still blinking red after 2 attempts, properly dispose of the battery pack at a battery recycling facility. 2. Properly dispose of the battery pack at a battery recycling facility.

California Proposition 65 Warning Information

What is this warning?

You may see a product for sale that has a warning label like the following:

WARNING: Cancer and Reproductive Harm—www.p65Warnings.ca.gov.

What is Prop 65?

Prop 65 applies to any company operating in California, selling products in California, or manufacturing products that may be sold in or brought into California. It mandates that the Governor of California maintain and publish a list of chemicals known to cause cancer, birth defects, and/or other reproductive harm. The list, which is updated annually, includes hundreds of chemicals found in many everyday items. The purpose of Prop 65 is to inform the public about exposure to these chemicals.

Prop 65 does not ban the sale of products containing these chemicals but instead requires warnings on any product, product packaging, or literature with the product. Moreover, a Prop 65 warning does not mean that a product is in violation of any product safety standards or requirements. In fact, the California government has clarified that a Prop 65 warning "is not the same as a regulatory decision that a product is 'safe' or 'unsafe.'" Many of these chemicals have been used in everyday products for years without documented harm. For more information, go to https://oag.ca.gov/prop65/faqs-view-all.

A Prop 65 warning means that a company has either (1) evaluated the exposure and has concluded that it exceeds the "no significant risk level"; or (2) has chosen to provide a warning based on its understanding about the presence of a listed chemical without attempting to evaluate the exposure.

Does this law apply everywhere?

Prop 65 warnings are required under California law only. These warnings are seen throughout California in a wide range of settings, including but not limited to restaurants, grocery stores, hotels, schools, and hospitals, and on a wide variety of products. Additionally, some online and mail order retailers provide Prop 65 warnings on their websites or in catalogs.

How do the California warnings compare to federal limits?

Prop 65 standards are often more stringent than federal and international standards. There are various substances that require a Prop 65 warning at levels that are far lower than federal action limits. For example, the Prop 65 standard for warnings for lead is 0.5 µg/day, which is well below the federal and international standards.

Why don't all similar products carry the warning?

- Products sold in California require Prop 65 labelling while similar products sold elsewhere do not.
- A company involved in a Prop 65 lawsuit reaching a settlement may be required to use Prop 65 warnings for its products, but other companies making similar products may have no such requirement.
- The enforcement of Prop 65 is inconsistent.
- Companies may elect not to provide warnings because they conclude that they are not required to do so under Prop 65; a lack of warnings for a product does not mean that the product is free of listed chemicals at similar levels.

Why does Toro include this warning?

Toro has chosen to provide consumers with as much information as possible so that they can make informed decisions about the products they buy and use. Toro provides warnings in certain cases based on its knowledge of the presence of one or more listed chemicals without evaluating the level of exposure, as not all the listed chemicals provide exposure limit requirements. While the exposure from Toro products may be negligible or well within the "no significant risk" range, out of an abundance of caution, Toro has elected to provide the Prop 65 warnings. Moreover, if Toro does not provide these warnings, it could be sued by the State of California or by private parties seeking to enforce Prop 65 and subject to substantial penalties.