Form No. 3351–358

Step Kit
Reelmaster® 5200/5400
Part No. 107–8820

Installation Instructions

Caution

Accidental starting of the engine could seriously injure you or other bystanders.

Remove the key from the ignition switch before you do any maintenance.

1. Park the machine on a level surface, lower the cutting units, engage the parking brake, stop the engine, and remove the key from the ignition switch.
2. Loosely install the R.H. step plate to the R.H. lift arm with two mounting brackets, (4) screws and nuts. Position step plate on lift arm as shown in figure.
3. Move step plate rearward to bend in lift arm. Make sure step plate is level and tighten mounting screws and nut.
4. Repeat procedure on L.H. lift arm.

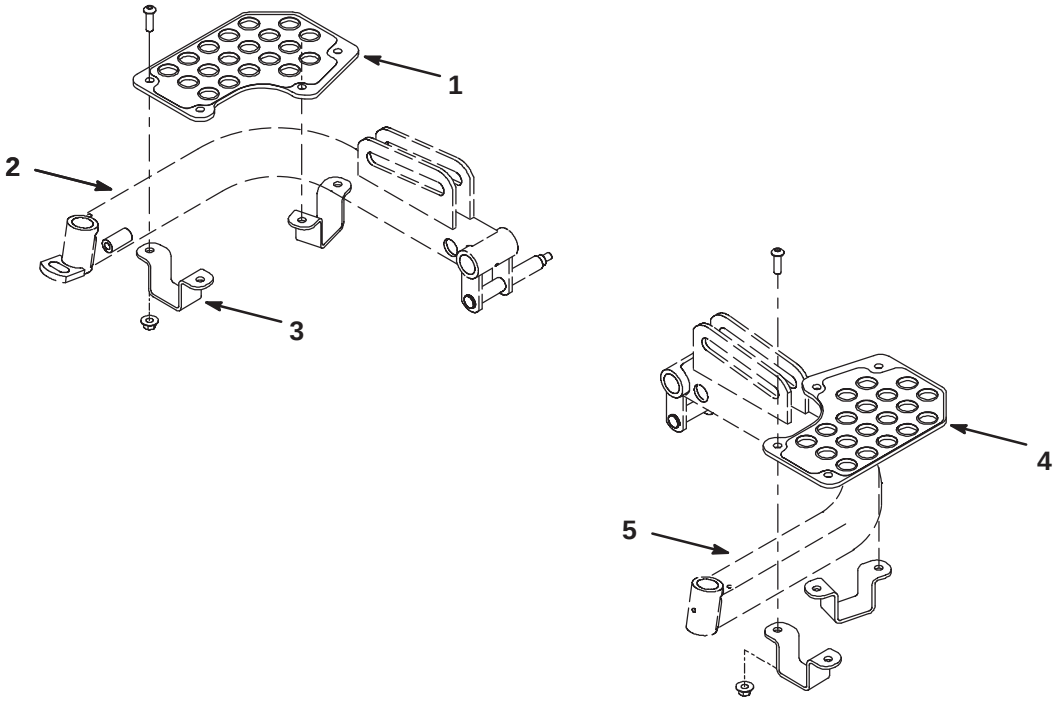

Figure 1

1. Step plate (R.H.)
2. Lift arm (R.H.)
3. Mounting bracket
4. Step plate (L.H.)
5. Lift arm (L.H.)

© 2003 by The Toro Company
8111 Lyndale Avenue South
Bloomington, MN 55420-1196

All Rights Reserved
Printed in the USA