FORM NO. 3312-601

TORO®

MODEL NO. 58402-5000001 & Up

PARTS CATALOG

2 H.P. GAS EDGER

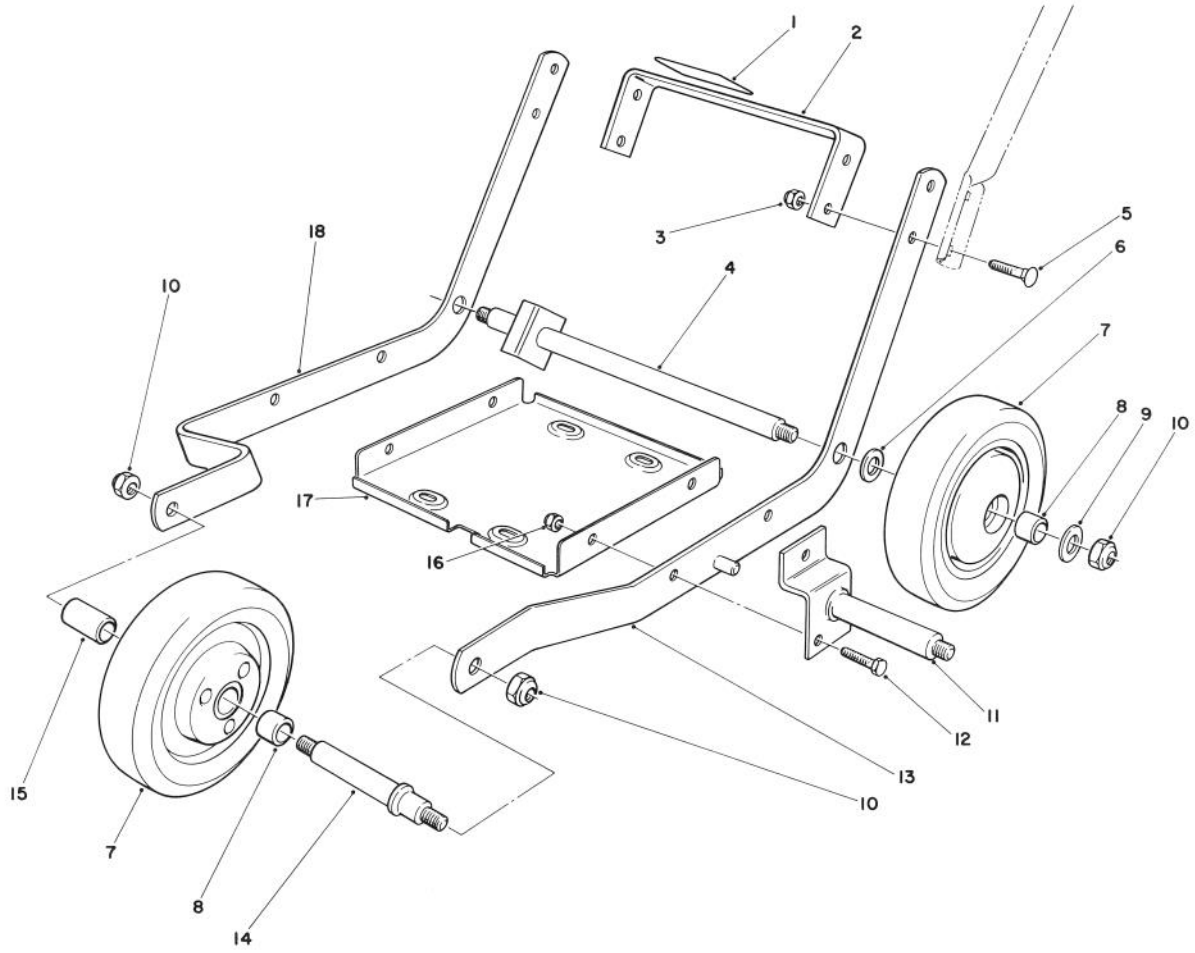

FRAME ASSEMBLY

Ref. No.	Part No.	Description	No. Used
1	52-0570	Decal — Warning	1
2	52-1000	Plate — Escutcheon	1
3	3296-47	Nut — Lock	4
4	52-1230	Axle — Rear	1
5	3230-22	Bolt — Carriage	4
6	36-4780	Washer — Flat	2
7	46-1113	Wheel & Tire Assembly (Incl. Ref. #8)	3
8	27-6250	Bushing — Wheel	6
9	40-1940	Washer — Flat	2

Ref. No.	Part No.	Description	No. Used
10	3296-39	Nut — Lock	4
11	52-1070	Pivot Pin Assembly	1
12	322-5	Screw — Cap Hx. Hd.	4
13	52-1020	Frame — L.H.	1
14	52-1160	Axle — Front	1
15	52-1210	Spacer — Axle	1
16	3296-29	Nut — Lock	4
17	52-1180	Plate — Engine	1
18	52-1010	Frame — R.H.	1

©The Toro Company — 1985

PRICE $1.00

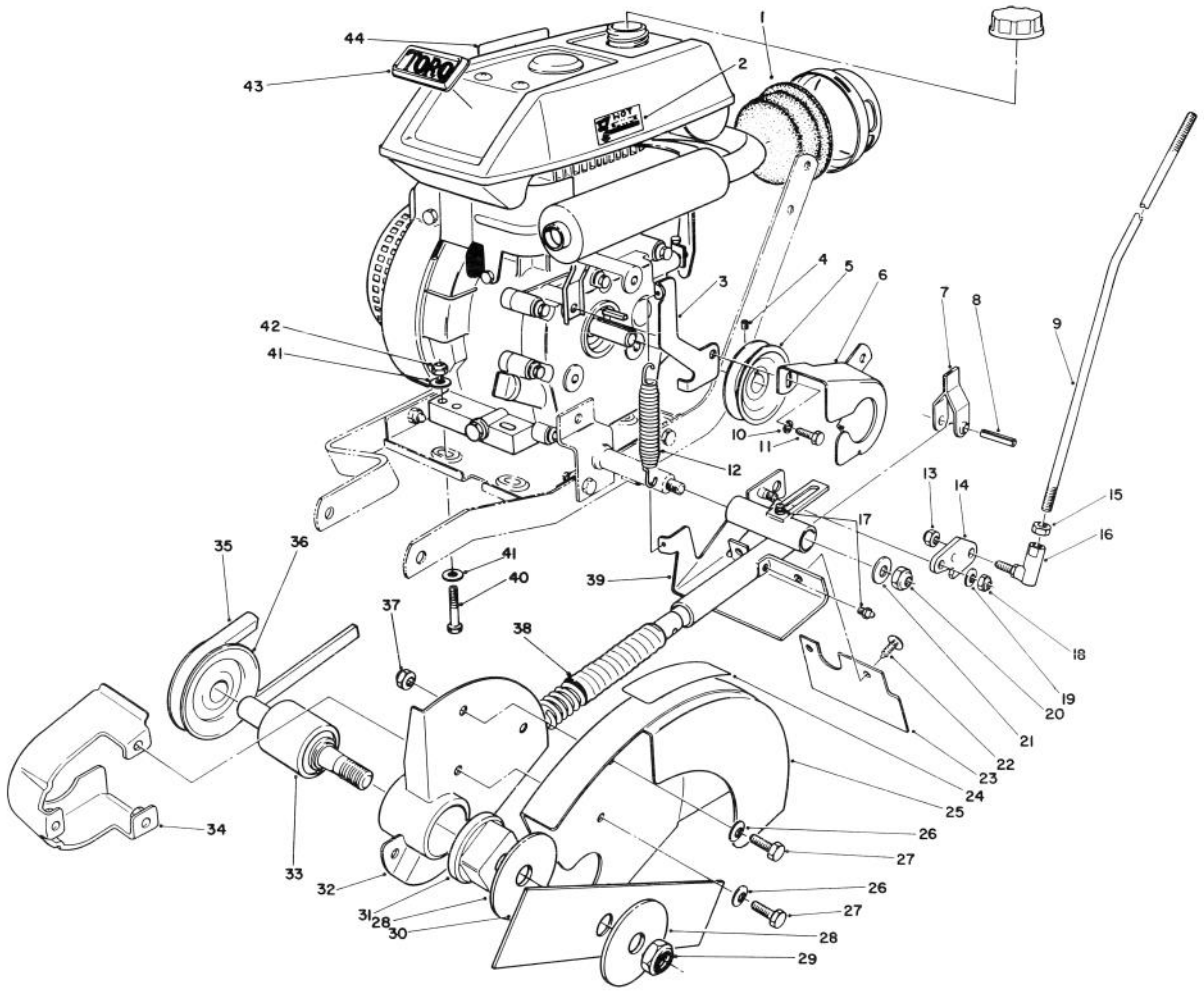

ENGINE & BLADE ASSEMBLY

Ref. No.	Part No.	Description	No. Used
1	52-1190	Foam Element — Air Cleaner	1
2	42-6250	Decal — Hot	1
3	52-0210	Bracket — Spring	1
4	3246-15	Screw — Set	1
5	52-0450	Pulley — Engine	1
6	52-0580	Guard — Engine Pulley	1
7	52-0070	Lever Assembly	1
8	32121-112	Pin — Roll	1
9	52-0230	Rod — Lower	1
10	3253-4	Washer — Lock	4
11	42-9230	Screw — Cap Hx. Hd.	4
12	52-0610	Spring — Extension	1
13	3296-6	Nut — Lock	1
14	52-0240	Lock Lever Assembly	1
15	3220-3	Nut — Jam	1
16	52-0220	Ball Joint	1
17	302-5	Fitting — Grease	2
18	3296-47	Nut — Lock	1
19	3256-2	Washer — Flat	1
20	3296-25	Nut — Lock	1
21	36-4780	Washer — Flat	1
22	3290-446	Fastener — Panel Clip	2
23	52-0310	Guard — Rubber	1

Ref. No.	Part No.	Description	No. Used
24	52-0400	Decal — Warning	1
25	52-0090	Blade Guard Assembly	1
26	3290-451	Washer — Bellville	5
27	49-2040	Screw — Cap Hx. Hd.	5
28	55-7960	Washer — Blade	2
29	3219-5	Nut — Hex	1
30	55-7931	Blade — 9"	1
31	52-0720	Shield — Bearing	1
32	52-1130	Hub & Shaft Assembly	1
33	52-0460	Spindle Assembly	1
34	52-0500	Guard — Blade Pulley	1
35	52-0320	V-Belt	1
36	52-0620	Pulley — Blade	1
37	3296-8	Nut — Lock	2
38	11-8249	Spring & Bellows Assembly	1
39	11-8309	Pivot Arm Bracket Assembly	1
40	322-6	Screw — Cap Hx. Hd.	4
44	3256-23	Washer — Flat	8
42	3296-29	Nut — Lock	4
43	46-8290	Plate — Toro Logo	1
44	52-3380	Decal — Instruction	1
*	59265	Engine (Complete)	1

*Not Illustrated

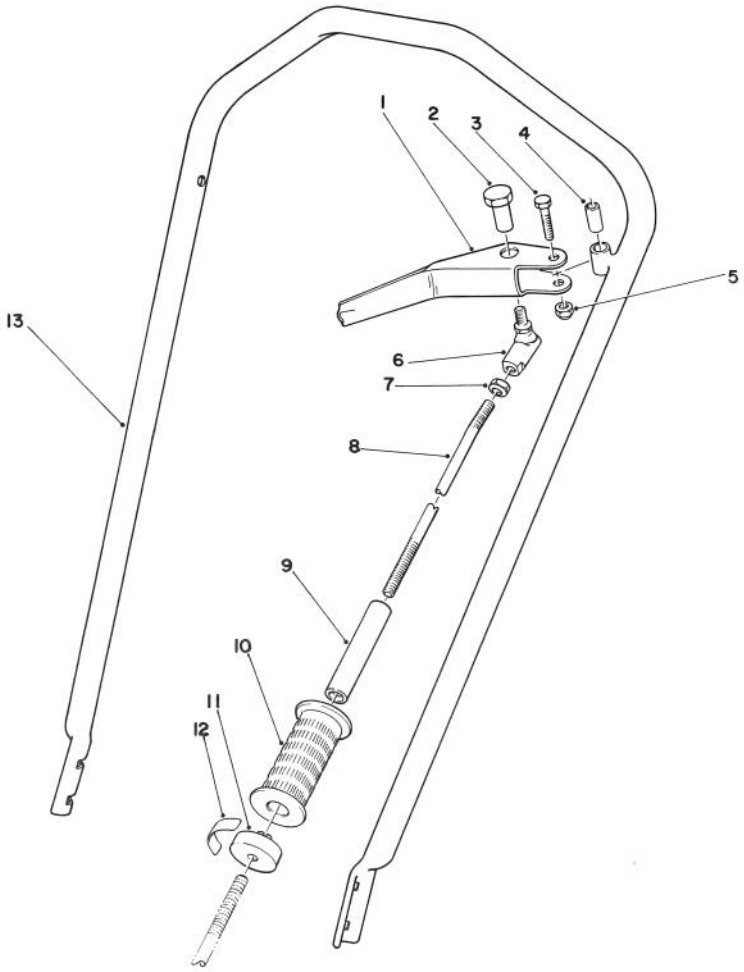

HANDLE ASSEMBLY

Ref. No.	Part No.	Description	No. Used
1	52-0700	Lever — Control	1
2	52-0710	Bolt — Control Lever	1
3	321-9	Screw — Cap Hx. Hd.	1
4	52-0690	Bushing — Control Lever	1
5	3296-16	Locknut	1
6	52-0220	Ball Joint	1
7	3220-3	Nut — Jam	1

Ref. No.	Part No.	Description	No. Used
8	52-0680	Rod — Upper	1
9	52-0660	Turnbuckle — Adjustable	1
10	52-0670	Grip — Handle	1
11	52-0650	Knob — Lock	1
12	52-0740	Decal — Adjustment	1
13	52-0010	Handle Assembly	1

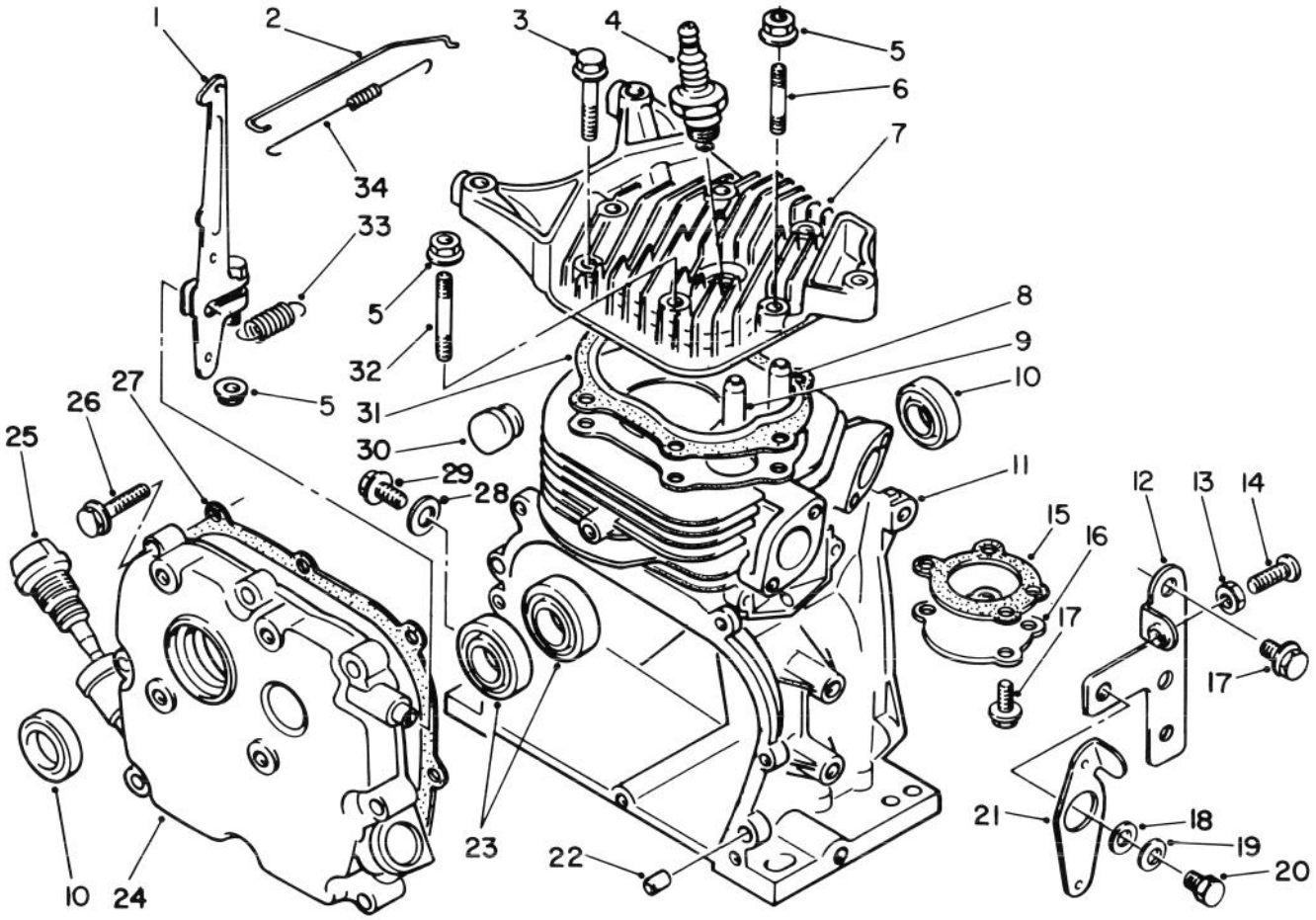

CRANKCASE ASSEMBLY

Ref. No.	Part No.	Description	No. Used
1	53-0140	Lever — Throttle Control	1
2	53-0230	Rod — Carburetor	1
3	53-1490	Screw — Hex Flange Hd.	4
4	53-0050	Spark Plug	1
5	50-7180	Nut — Flange	3
6	53-0030	Bolt — Stud	1
7	53-0010	Cylinder Head	1
8	53-0070	Guide — Intake Valve	1
9	53-0080	Guide — Exhaust Valve	1
10	50-0860	Seal — Oil	2
11	53-0060	Cylinder Assembly	1
12	53-0150	Bracket — Governor Control	1
13	53-0180	Nut — Jam	1
14	53-0170	Screw — Round Phillips Hd.	1
15	50-3520	Gasket — Level Sensor	1
16	53-0090	Cover — Level Sensor	1
17	50-6320	Screw — Hex Flange Hd.	6
18	55-7940	Spacer	1

Ref. No.	Part No.	Description	No. Used
19	53-0210	Washer	1
20	53-0220	Screw — Hex Hd.	1
21	53-0190	Lever	1
22	50-0450	Pin	2
23	50-0820	Bearing	2
24	53-0100	Crankcase Cover Assembly	1
25	53-0120	Gauge — Oil Level	1
26	53-0130	Screw — Hex Flange Hd.	8
27	53-0110	Gasket — Crankcase Cover	1
28	50-0780	Gasket — Drain Plug	1
29	50-0200	Plug — Drain	1
30	53-0870	Plug	1
31	53-0020	Gasket — Cylinder Head	1
32	53-0040	Bolt — Stud	1
33	53-0250	Spring — Extension	1
34	53-0240	Spring — Carburetor Rod	1
*	53-0260	Gasket Set	1

*Not Illustrated

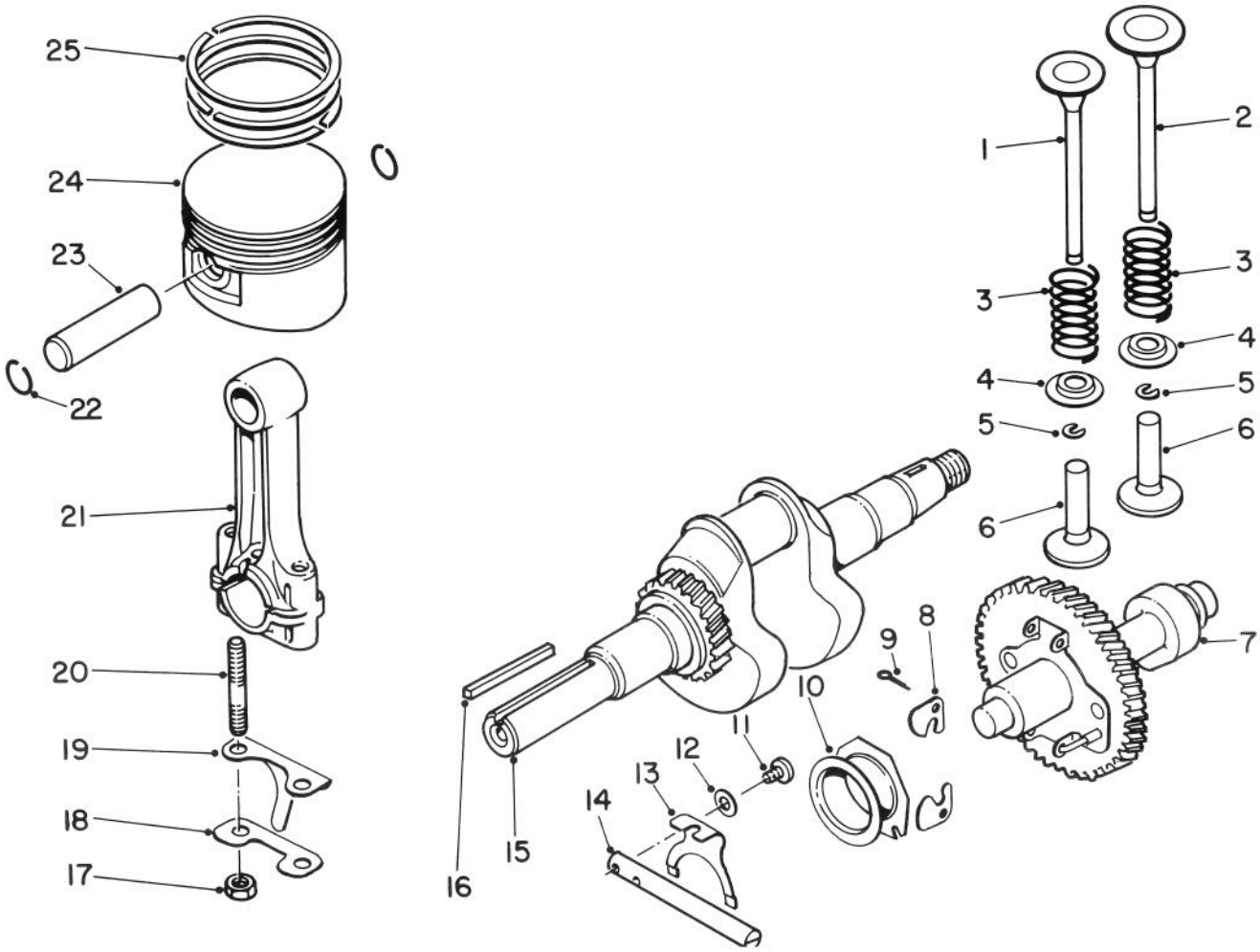

CRANKSHAFT ASSEMBLY

Ref. No.	Part No.	Description	No. Used
1	53-0450	Valve — Intake	1
2	53-0460	Valve — Exhaust	1
3	53-0470	Spring — Valve	2
4	50-2150	Retainer — Valve Spring	2
5	50-2170	Cotter — Valve	2
6	53-0420	Tappet — Valve (Std. Length)	2
	53-0430	Tappet — Valve (Below Std. Length)	2
	53-0440	Tappet — Valve (Above Std. Length)	2
7	53-0710	Cam Shaft	1
8	50-3090	Bracket — Centrifugal Arm	1
9	50-0600	Washer	1
10	81-1410	Screw — Round Phillips Hd.	1
11	50-3120	Collor — Governor	1
12	53-0490	Plate — Shift	1
13	50-3100	Bolt	1
14	50-3080	Arm — Centrifugal	12
15	50-0420	Pin — Cotter	2
16	50-0220	Screw — Round Phillips Hd.	2
17	50-0590	Washer	2

Ref. No.	Part No.	Description	No. Used
18	53-0390	Crankshaft Assembly	1
19	53-0480	Shaft — Governor	1
20	53-0400	Key	1
21	53-0350	Bolt — Connecting Rod	2
22	53-0360	Plate — Lock	1
23	53-0370	Plate — Splasher	1
24	53-0340	Connecting Rod Assembly (Incl. Ref. #21-23)	1
25	50-0950	Ring — Snap	2
26	53-0330	Pin Piston	1
27	53-0270	Piston (Std.)	1
	53-0280	Piston (Oversize .010 inch, .25mm)	1
	53-0290	Piston (Oversize .020 inch, .5mm)	1
28	53-0300	Ring Set — Piston (Std.)	1
	53-0310	Ring Set — Piston (Oversize .010 inch, .25mm)	1
	53-0320	Ring Set — Piston (Oversize .020 inch, 5mm)	1

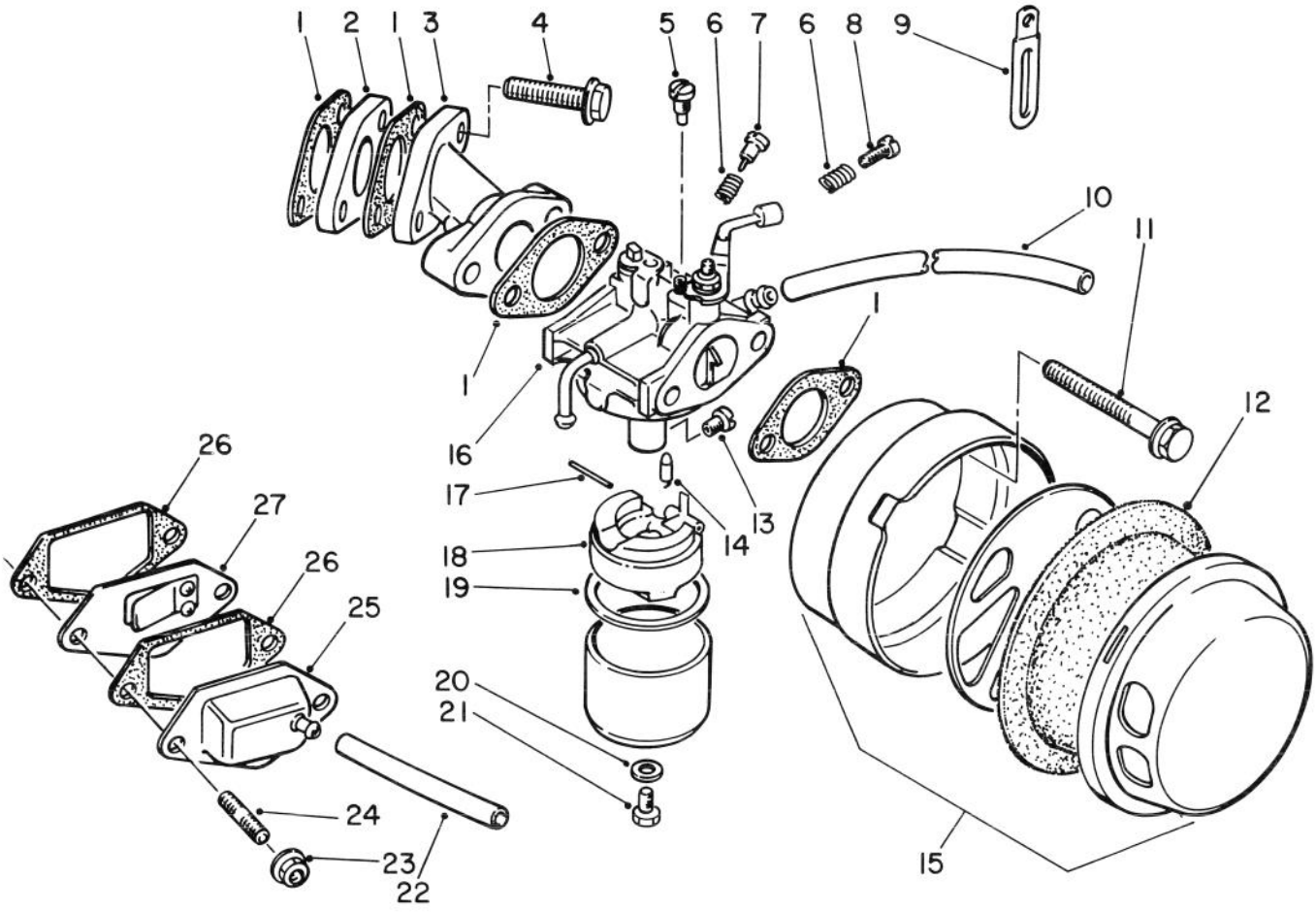

CARBURETOR ASSEMBLY

Ref. No.	Part No.	Description	No. Used
1	50-2450	Gasket	4
2	53-0540	Insulator — Carburetor	1
3	53-0610	Manifold — Intake	1
4	53-0130	Screw — Hex Flange Hd.	2
5	50-4770	Jet — Pilot	1
6	50-2340	Spring	2
7	50-2360	Adjuster	1
8	50-0250	Screw — Throttle Stop	1
9	81-1480	Clamp — Fuel Hose	1
10	53-0580	Hose — Overflow	1
11	53-0600	Screw — Hex Flange Hd.	2
12	52-1190	Foam Element — Air Cleaner	1
13	53-0560	Jet — Main	1
14	53-0590	Needle Assembly	1

Ref. No.	Part No.	Description	No. Used
15†	53-0530	Air Cleaner Assembly	1
16	53-0550	Carburetor Assembly (Incl. Items #13, 14, 17-21)	1
17	81-0980	Pin — Float	1
18	55-1320	Float	1
19	50-2280	Gasket — Float Bowl	1
20	50-2260	Gasket	1
21	53-0570	Screw — Hex Hd.	1
22	50-0900	Hose — Breather	1
23	50-7180	Nut — Flange	2
24	50-7170	Bolt — Stud	2
25	53-0500	Cap — Breather	1
26	53-0510	Gasket — Breather	2
27	53-0520	Valve — Reed	1

†Does not include Element.

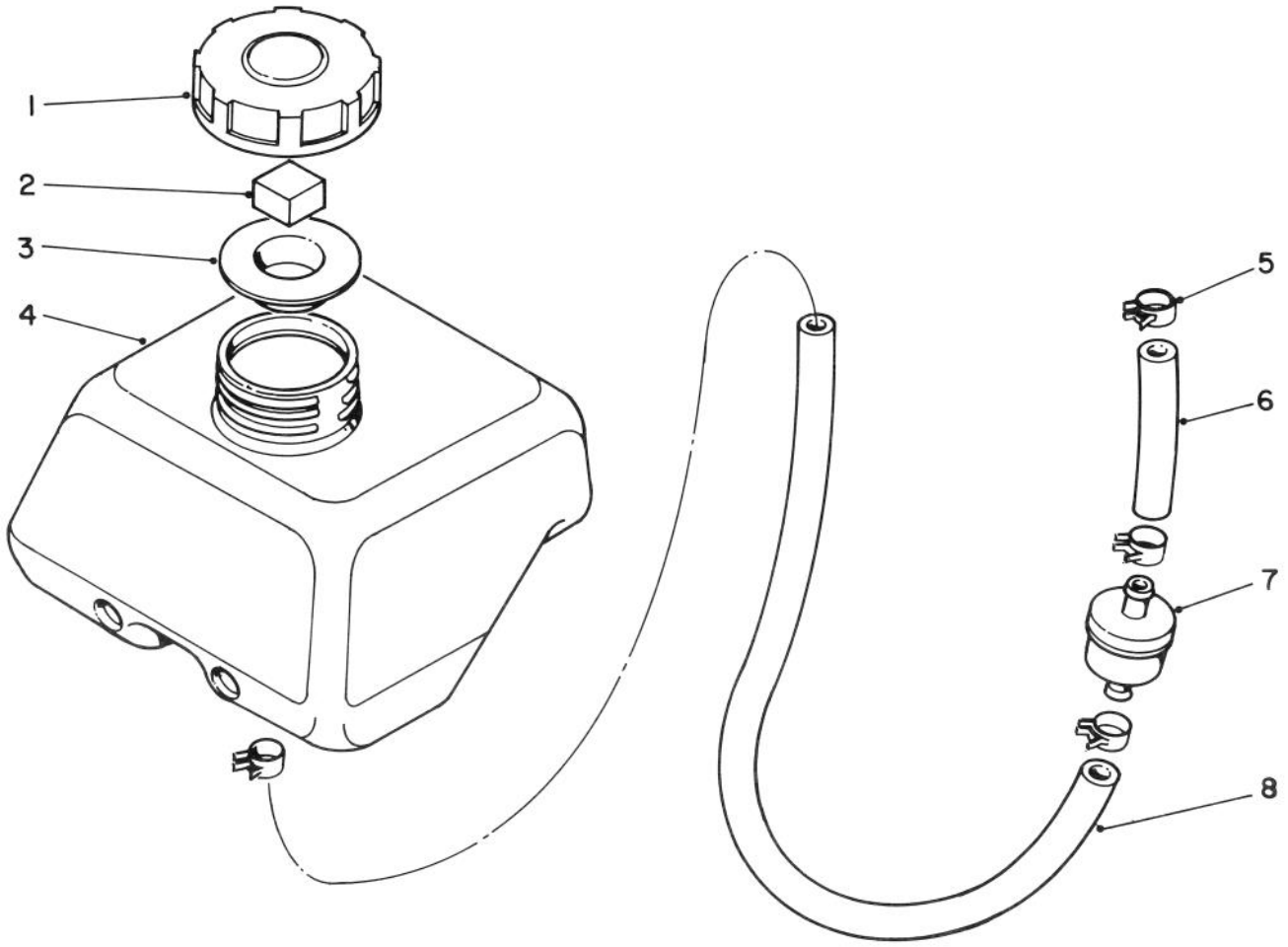

FUEL TANK ASSEMBLY

Ref. No.	Part No.	Description	No. Used
1	53-0910	Fuel Cap Assembly (Incl. Ref. #2 & 3)	1
2	53-0930	Gasket — Inner	1
3	53-0920	Gasket — Outer	1
4	53-0900	Tank — Fuel	1

Ref. No.	Part No.	Description	No. Used
5	50-0990	Clip — Hose	4
6	50-0930	Hose — Fuel (Filter to Carburetor)	1
7	53-0940	Filter — Fuel	
8	50-0930	Hose — Fuel (Tank to Filter)	1

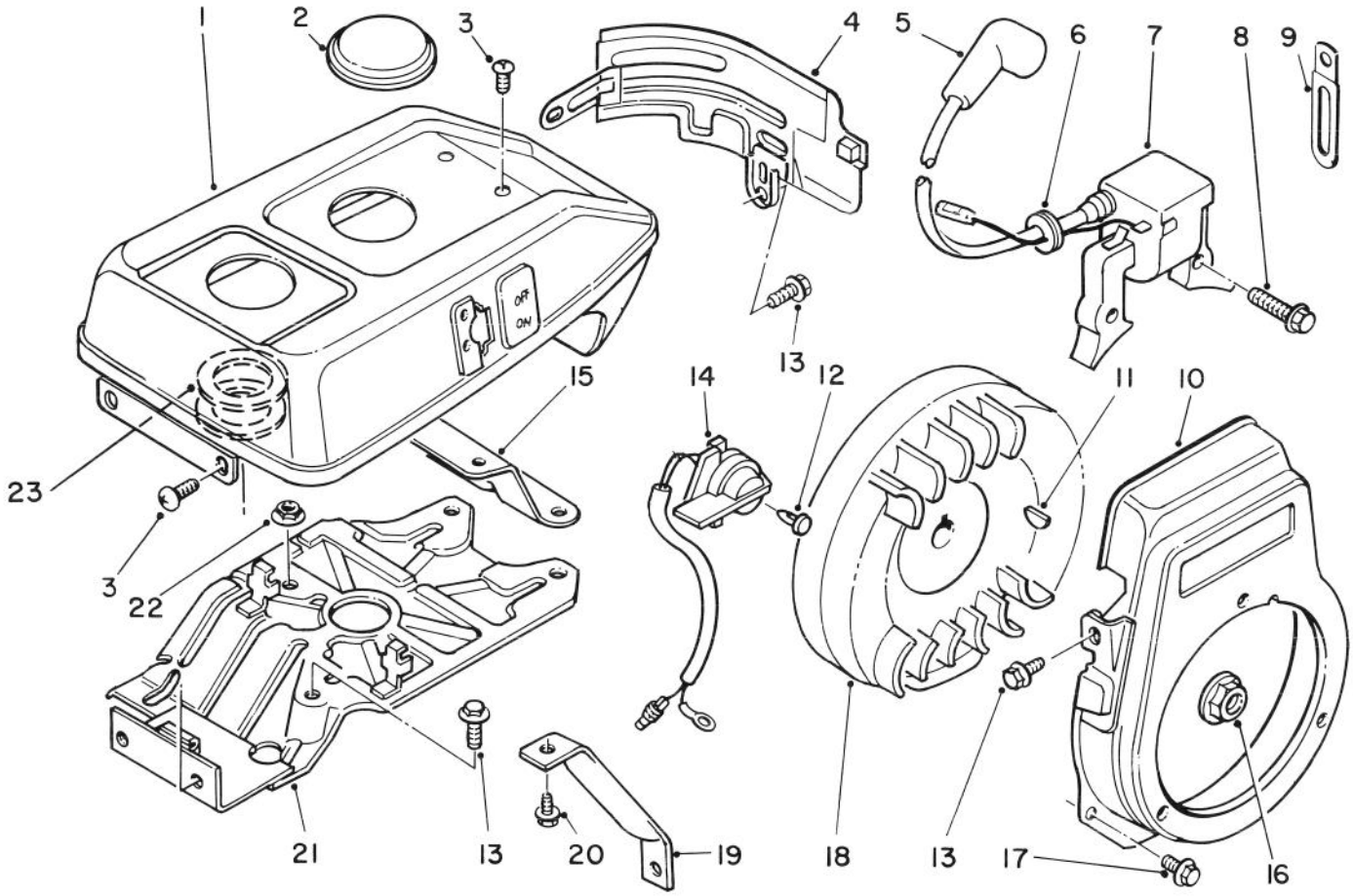

MAGNETO & COWLING ASSEMBLY

Ref. No.	Part No.	Description	No. Used
1	53-1110	Cover — Engine	1
2	53-0820	Cap — Spark Plug Access	1
3	53-0810	Screw — Round Phillips Hd.	4
4	53-0760	Cowling — Side	1
5	81-1500	Cover — Spark Plug	1
6	53-0840	Grommet	1
7	53-0830	Magneto Assembly (Incl. Ref. #5 & 6)	1
8	53-0860	Screw — Hex Flange Hd.	2
9	81-1480	Clamp	1
10	53-0750	Cover — Cooling Fan	1
11	50-0640	Key — Woodruff	1

Ref. No.	Part No.	Description	No. Used
12	53-0890	Rivet — Switch	1
13	50-6320	Screw — Hex Flange Hd.	8
14	53-0880	Switch — Engine	1
15	53-0780	Bracket — Engine Cover	1
16	50-0540	Nut — Flange	1
17	50-6470	Screw — Hex Flange Hd.	1
18	53-0850	Flywheel	1
19	53-0790	Support — Fuel Tank	1
20	81-1280	Screw — Hex Flange Hd.	1
21	53-0770	Cowling — Upper	1
22	50-7180	Nut — Flange	1
23	53-1510	Washer	1

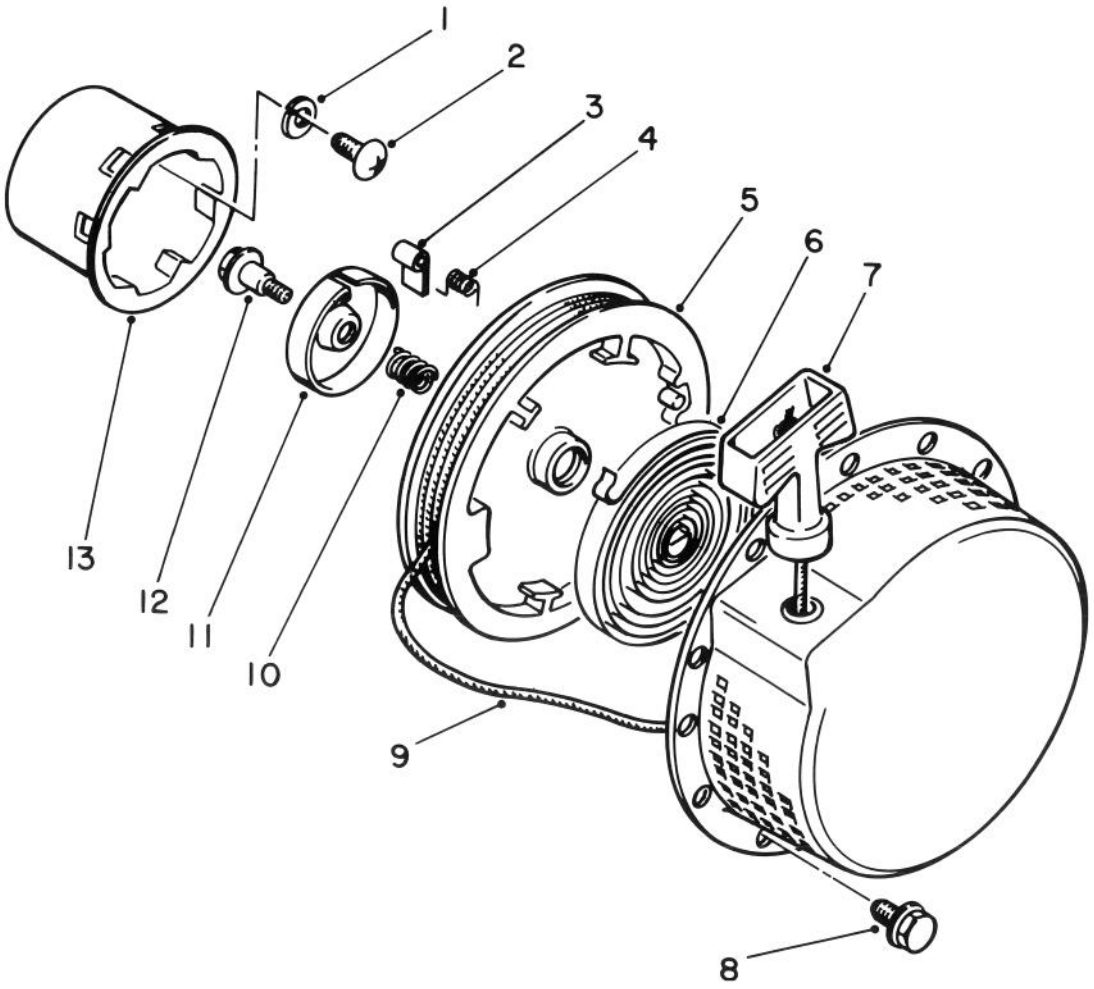

RECOIL STARTER ASSEMBLY

Ref. No.	Part No.	Description	No. Used
1	53-0680	Washer — Lock	3
2	53-0670	Screw — Round Phillips Hd.	3
3	81-1230	Dog	1
4	81-1220	Spring	1
5	53-1470	Reel	1
6	53-0720	Spring	1
7		Grip — Hand	1
8	53-0690	Screw — Hex Flange Hd.	3

Ref. No.	Part No.	Description	No. Used
9	53-0730	Starter Rope Assembly (Incl. Ref. #7)	1
10	81-1240	Spring — Friction	1
11	81-1250	Plate — Friction	1
12	81-1260	Bolt — Shoulder	1
13	53-0660	Pulley — Starter	1
*	53-0700	Recoil Starter Assembly (Incl. Ref. #3-12)	1

*Not Illustrated

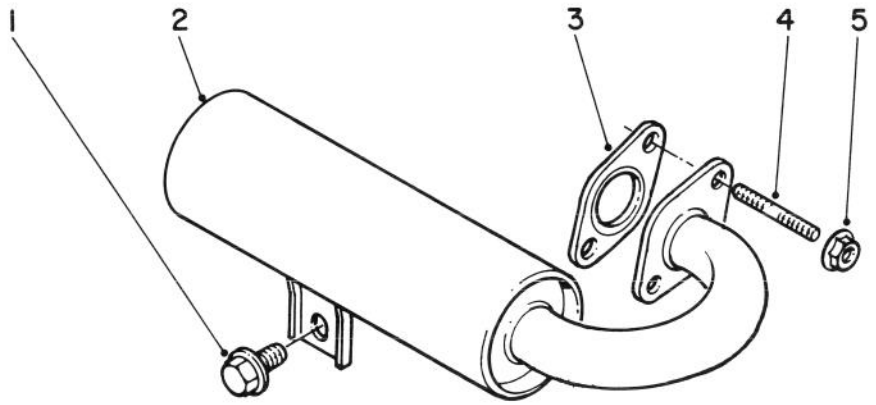

MUFFLER ASSEMBLY

Ref. No.	Part No.	Description	No. Used
1	50-7260	Screw — Hex Flange Hd.	1
2	53-1520	Muffler	1
3	53-0620	Gasket — Exhaust	1

Ref. No.	Part No.	Description	No. Used
4	50-7170	Bolt — Stud	2
5	50-7180	Nut — Flange	2

PRODUCT CHANGES

In an effort to make improvements available to TORO owners as quickly as possible, minor changes are incorporated into Toro's products from time to time that do not become immediately shown in the Parts Catalog. If such a change apparently has been made in your unit, which is not reflected in your manual, see your TORO Distributor or his Authorized TORO Service Dealer for information and part numbers.

IDENTIFICATION AND ORDERING

MODEL AND SERIAL NUMBERS

The Edger has two identification numbers: a model number and a serial number. The two numbers are stamped on a decal which is located on the crossbar at the upper rear end of the edger frame. In any correspondence concerning the edger, supply model and serial numbers to assure that correct information and replacement parts are obtained.

To order replacement parts from an Authorized TORO Service Dealer, supply the following information:

1. Model and serial numbers of the edger.
2. Part number, description, and quantity of part(s) desired.

Note: Do not order by reference number if a parts catalog is being used; use the PART NUMBER.

The Toro Promise

A Two Year Limited Warranty

On All

Gasoline Powered Consumer Products

The Toro Company promises to repair your TORO Product if defective in materials or workmanship. The following time periods from the date of purchase apply:

Residential Product ..... 2 Years
Residential Products Used Commercially ..... 45 Days

The costs of parts and labor are included, but the customer pays the transportation costs. Just return any residential product to an Authorized TORO Service Dealer or TORO Distributor.

Should you feel your TORO Product is defective and wish to rely on The Toro Promise, the following procedure is recommended:

1. Contact any Authorized TORO Service Dealer, TORO Master Service Dealer, or TORO Distributor (the Yellow Pages of your telephone directory is a good reference source).
2. He will either instruct you to return the product to him or recommend another Authorized TORO Service outlet which might be more convenient.
3. Bring the product along with your original sales slip, or other evidence of purchase date, to the service dealer.
4. The servicing dealer will inspect the unit, advise you whether the product is defective and, if so, make all repairs necessary to correct the defect without extra charge to you.

If for any reason you are dissatisfied with the dealer's analysis of the defect or the service performed, you may contact us.

Write:

TORO Consumer Service Department
8111 Lyndale Avenue South
Minneapolis, Minnesota 55420

The above remedy of product defects through repair by an Authorized TORO Service Dealer is the purchaser's sole remedy for any defect.

THERE IS NO OTHER EXPRESS WARRANTY. ALL IMPLIED WARRANTIES OF MERCHANTABILITY AND FITNESS FOR USE ARE LIMITED TO THE DURATION OF THE EXPRESS WARRANTY.

Some states do not allow limitations on how long an implied warranty lasts, so the above limitation may not apply to you.

This warranty applies only to parts or components which are defective and does not cover repairs necessary due to normal wear, misuse, accidents, or lack of proper maintenance. Regular, routine maintenance of the unit to keep it in proper operating condition is the responsibility of the owner.

All warranty repairs reimbursable under The Toro Promise must be performed by an Authorized TORO Service Dealer using Toro approved replacement parts.

Repairs or attemped repairs by anyone other than an Authorized TORO Service Account are not reimbursable under The Toro Promise. In addition, these unauthorized repair attempts may result in additional malfunctions, the correction of which is not covered by warranty.

THE TORO COMPANY IS NOT LIABLE FOR INDIRECT, INCIDENTAL OR CONSEQUENTIAL DAMAGES IN CONNECTION WITH THE USE OF THE PRODUCT INCLUDING ANY COST OR EXPENSE OF PROVIDING SUBSTITUTE EQUIPMENT OR SERVICE DURING PERIODS OF MALFUNCTION OR NON-USE.

Some states do not allow the exclusion or limitation of incidental or consequential damages, so the above limitation or exclusion may not apply to you.

This warranty gives you specific legal rights, and you may also have other rights which vary from state to state.

COUNTRIES OTHER THAN THE UNITED STATES OR CANADA

Customers who have purchased TORO products exported from the United States or Canada should contact their TORO Distributor (Dealer) to obtain guarantee policies for your country, province or state. If for any reason you are dissatisfied with your Distributor's service or have difficulty obtaining guarantee information, contact the TORO importer. If all other remedies fail, you may contact us at The Toro Company.

Compliance with Radio Interference Regulations Certified.
Certifie Conforme au Reglement sur le Brouillage Radioelectrique.

MAINTENANCE RECORD
