Form No. 3480-555 Rev A

Engine Conversion Kit

Subaru Powered Walk-Behind Fixed Head Greensmaster® 800, 1000, 1010, 1600, or 1610 Mower

Model No. 161-7433

Model No. 161-7434

Installation Instructions

This engine conversion kit is only for machines with following model and serial numbers:

Model Number	Serial Number
04038	315000001 through 315000500
04039	315000001 through 316999999
04054	315000001 through 999999999
04055	315000001 through 999999999
04056	315000001 through 999999999

Light kit, Model 04063 (fixed-head traction units) is compatible with this kit.

Note: Older light kits are not compatible with this kit.

Introduction

It is a violation of California Public Resource Code Section 4442 or 4443 to use or operate the engine on any forest-covered, brush-covered, or grass-covered land unless the engine is equipped with a spark arrester, as defined in Section 4442, maintained in effective working order or the engine is constructed, equipped, and maintained for the prevention of fire.

If you require a spark arrester, contact your Authorized Service Dealer.

Important: **These installation instructions contain engine operation and maintenance information that supersedes the engine operation and maintenance procedures in your machine *Operator's Manual*.**

Before operating or maintaining the machine or engine, always refer to the operating and safety instructions in your *Operator's Manual*.

Save these instructions.

Important: **The engine warranty is provided by the engine manufacturer. Please refer to the engine manufacturer's warranty and emissions system warranty included in the literature packet. That warranty applies only to the engine. It does not expand or otherwise alter any express or implied warranty terms or warranty period that may apply to the product into which the engine is installed.**

⚠ WARNING

CALIFORNIA
Proposition 65 Warning

The engine exhaust from this product contains chemicals known to the State of California to cause cancer, birth defects, or other reproductive harm.

Contents

Introduction 1
Safety 2
  Safety and Instructional Decals 2
Installation 3
  1 Preparing the Machine 3
  2 Removing the Existing Engine 3
  3 Installing the New Engine 3
  4 Lubricating and Adjusting the Machine 6
Product Overview 7
  Controls 7
Operation 7
  Fuel Specifications 7
  Using Stabilizer/Conditioner 7
  Filling the Fuel Tank 8
  Opening and Closing the Fuel-Shutoff Valve 9
Maintenance 9
  Recommended Maintenance Schedule(s) 9
  Preparing the Machine for Maintenance 10
  Servicing the Engine Oil 10
  Servicing the Air Cleaner 12
  Servicing the Spark Plug 13

© 2026—The Toro® Company
8111 Lyndale Avenue South
Bloomington, MN 55420

Register at www.Toro.com.

Original Instructions (EN)
Printed in the USA
All Rights Reserved

3480-555

Safety

Safety and Instructional Decals

Safety decals and instructions are easily visible to the operator and are located near any area of potential danger. Replace any decal that is damaged or missing.

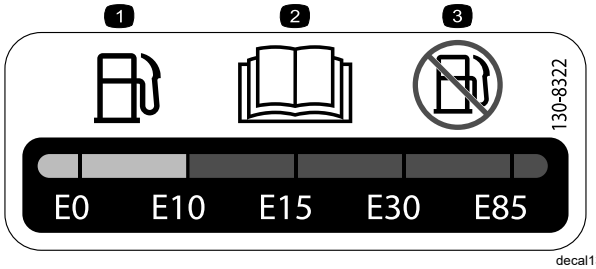

decal130-8322

130-8322

1. Use only fuel with an alcohol content by volume under 10%.
2. Read the *Operator's Manual* for more information on fuel.
3. Do not use fuel with an alcohol content by volume greater than 10%.



decal133-8062

133-8062

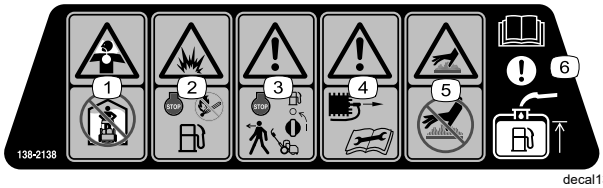

decal138-2138

138-2138

1. Poisonous fumes or toxic gases, asphyxiation hazard—do not run the engine in an enclosed space.
2. Explosion hazard—shut off the engine before adding fuel; no fire, open flames, or smoking when adding fuel.
3. Warning—shut off the engine and close the fuel shutoff valve before leaving the machine.
4. Warning— disconnect the spark plug wire before performing maintenance.
5. Hot surface hazard—do not touch the hot surface.
6. Attention—read the *Operator's Manual* for information about filling the fuel tank.

Installation

1

Preparing the Machine

No Parts Required

Procedure

Prepare the machine; refer to Preparing the Machine for Maintenance (page 10).

2

Removing the Existing Engine

No Parts Required

Procedure

Important: **For additional engine-removal instructions and illustrations, refer to the Greensmaster 1000 *Service Manual*.**

Important: **Retain all removed parts for reuse unless otherwise noted.**

1. Remove and discard the old bellcrank cover.
2. Remove and discard the V-belts from the driver pulley.
3. Remove the wire harness from the engine and the control-console connections.

   Note: Discard the wire harness.
4. Remove the interlock module from the engine.
5. Remove the brake and traction lever grips, and console cover.
6. Disconnect the throttle cable from the engine.
7. Disconnect the clutch cable from the clutch assembly on the engine and the console.

   Note: Discard the clutch cable.
8. Remove the old engine.

   Retain the engine-mounting bolts and nuts.
9. Remove the engine-mounting bracket and retain the engine-mounting bracket and bolts.
10. Clean the frame and check for damage or wear.

3

Installing the New Engine

Parts needed for this procedure:

1	Engine
1	Wire harness plate
1	Wire harness
1	Clutch-cable bracket
1	Clutch cable
1	Square key
1	Washer (3/8 x 1-3/8 inch)
1	Bolt (3/8 x 3/4 inch)
1	Drive pulley
1	Lock washer
1	Bolt (5/16 x 1 inch)
2	Bolt (7/16 x 1 inch)
2	Bolt (1/4 x 3/4 inch)
1	Bellcrank cover
1	Idler pulley assembly
1	Belt guide
1	Hex nut
4	Flat washer (3/8 x 1-1/8 inch)
1	Flat washer (5/16 inch)
1	Flat washer (M20)
1	Clutch lever
1	Torque spring
1	Clutch bracket
1	Traction pivot shaft
2	V-belt
1	R-clamp
1	Throttle cable, 158.3 cm (62-3/8 inches)
1	Throttle cable, 172.2 cm (67-13/16 inches)

Installing the Engine Components

1. Install the clutch plate with 2 bolts (1/4 x 3/4 inch) as shown in Figure 1.

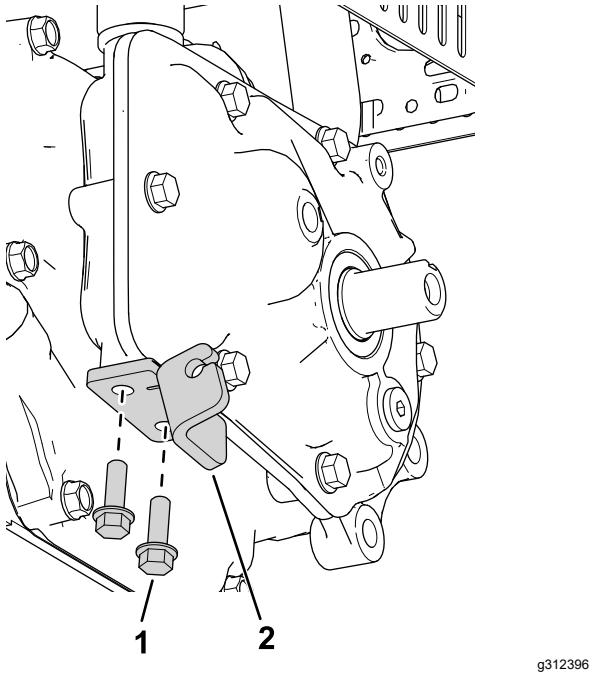

Figure 1

1. Clutch plate
2. Bolt (1/4 x 3/4 inch)

2. Install the square key onto the output shaft (Figure 2).

   Note: Apply anti-seize compound to the key and output shaft before installing.

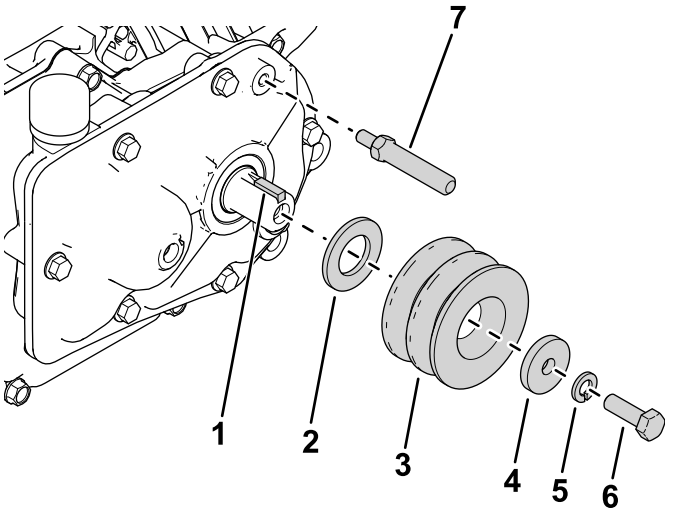

Figure 2

1. Square key
2. Washer (M20)
3. Drive pulley
4. Washer (5/16 inch)
5. Lock washer
6. Bolt (5/16 x 1 inch)
7. Traction pivot shaft

3. Install the new washer (M20), drive pulley, washer (5/16 inch), lock washer, and bolt (5/16 x 1 inch) as shown in Figure 2.
4. Install the traction pivot shaft to the gearbox (Figure 2).
5. Install the clutch bracket to the gearbox with 2 bolts (7/16 x 1 inch) as shown in Figure 3.

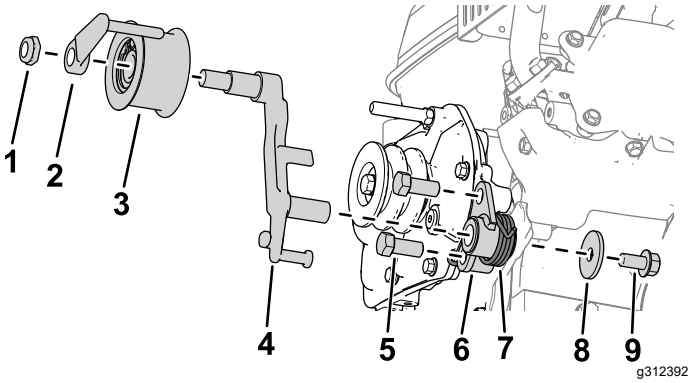

Figure 3

1. Hex nut
2. Belt guide
3. Idler pulley assembly
4. Clutch lever
5. Bolt (7/16 x 1 inch)
6. Clutch bracket
7. Torque spring
8. Washer (3/8 x 1-3/8 inch)
9. Bolt (3/8 x 3/4 inch)

6. Install the clutch lever to the clutch bracket (Figure 3).
7. Install the torque spring to the clutch bracket with a washer (3/8 x 1-3/8 inch) and a bolt (3/8 x 3/4 inch) as shown in Figure 3.
8. Install the idler pulley assembly to the clutch lever with a belt guide and a hex nut (Figure 3).

Installing the Wire Harness and Cables

1. Attach the wire-harness bracket to the fuel tank using the 2 existing flange nuts that secure the tank to the engine.
2. Install the interlock module to the wire-harness bracket with the wire-harness clip.
3. Install the engine-mounting bracket to the machine with the previously-removed bolts and 4 washers (3/8 x 1-1/8 inch) as shown in Figure 4.

   Loosely install the rear left engine bolt (shown in Figure 4).

   Note: To make installing the engine to the frame easier, tighten the other 3 bolts 90% of the way.

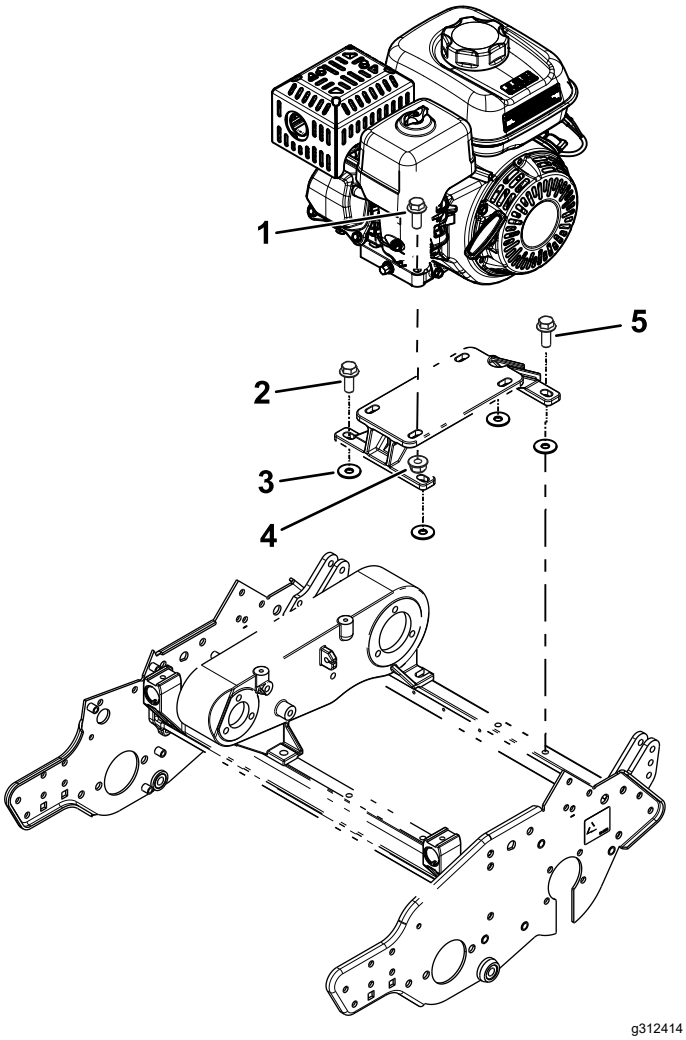

Figure 4

1. Engine bolt (previously removed)
2. Engine-mounting-bracket bolt (previously removed)
3. Washer (3/8 x 1-1/8 inch)
4. Engine nut (previously removed)
5. Rear left engine bolt

4. Mount the engine onto the engine-mounting bracket using the previously-removed bolts and nuts (Figure 4).

   Note: To make installing the engine to the frame easier, tighten the bolts 90% of the way.

5. Install the clutch cable to the clutch plate (Figure 5).

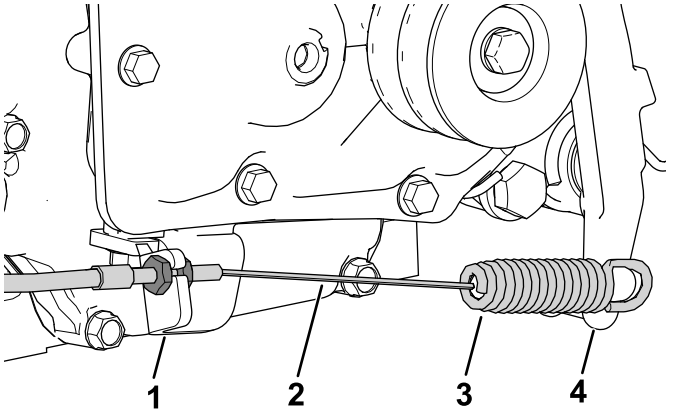

Figure 5

1. Clutch plate
2. Clutch cable
3. Clutch-cable spring end
4. Clutch lever

6. Install the spring end of the clutch cable to the clutch lever (Figure 5).
7. Install the throttle cable to the machine, refer to the machine *Service Manual* (Figure 8).
   - Use the throttle cable that is 172.2 cm (67-13/16 inches) long for a Model 04056 traction unit; refer to Figure 6.

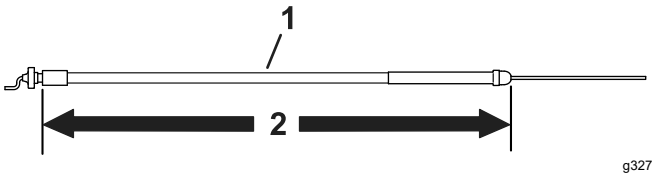

Figure 6

1. Throttle cable
2. 172.2 cm (67-13/16 inches)

   - Use the throttle cable that is 158.3 cm (62-3/8 inches) long for all models, but not for a Model 04056 traction unit; refer to Figure 7.

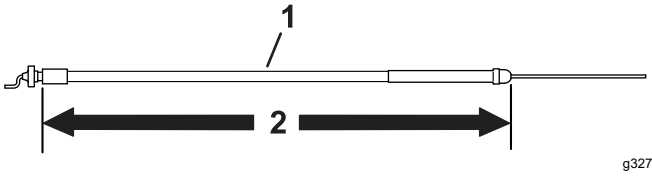

Figure 7

1. Throttle cable
2. 158.3 cm (62-3/8 inches)

Note: Observe the throttle-cable routing as shown in Figure 8. Route the cable to the left side of the engine and between the air-cleaner cover and fuel tank.

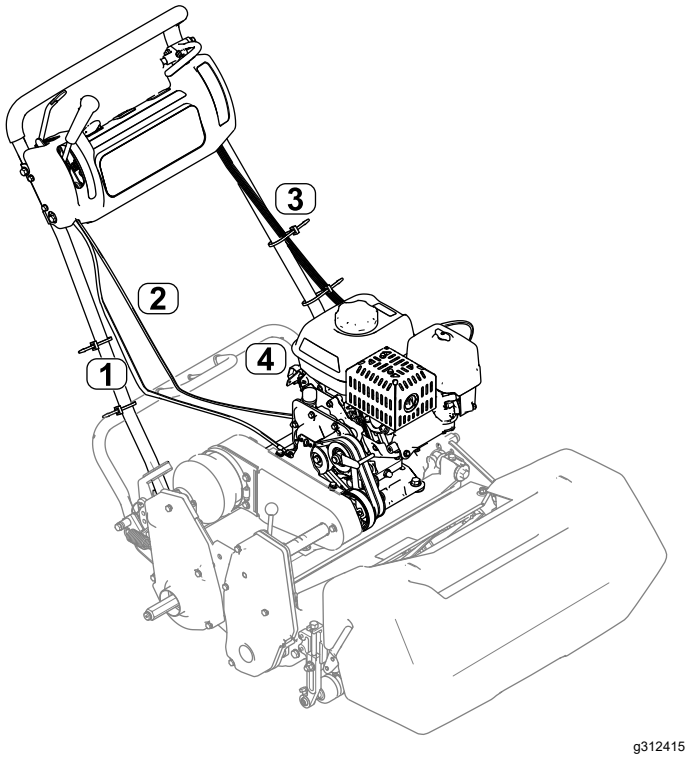

Figure 8

1. Clutch cable
2. Throttle cable
3. Wire harness
4. Interlock module

8. Remove the rear left bolt from the engine base (Figure 4) and use the bolt to secure the R-clamp and throttle cable to the engine base.
9. Install and adjust the V-belts; refer to your *Operator's Manual*.
10. Tighten all of the engine mounting and engine-mounting bracket bolts (Figure 4).
11. Connect the wire harness to the interlock module and route the harness up the left side of the handle (Figure 8).
12. Plug the wire harness into the appropriate console switches.

    Note: Connect the wire harness to the hour meter (if equipped).
13. Use the wire-harness pins to secure the wire harness into place under the console cover.
14. Mount the green ground wire using the cowling bolt under the fuel tank, and connect the red wire to the single wire on the engine. Connect the remaining 2 harness wires (black and yellow) to the engine wire harness with 2 wire connections.

    Note: Apply skin-over grease to the bolt and ground lug terminal.
15. Clip the wire harness to the mounting bracket.
16. Install the new bellcrank cover with the previously-removed hardware.

4

Lubricating and Adjusting the Machine

No Parts Required

Procedure

Important: **The engine gearbox does not require maintenance, as it is filled with a high-performance, long-life, synthetic semi-fluid grease.**

1. Adjust the clutch cable; refer to your *Operator's Manual*.
2. Adjust the throttle cable; refer to your *Operator's Manual*.
3. Lubricate the machine according to the instructions in your *Operator's Manual*.
4. Fill the engine crankcase with oil according to the instructions in your *Operator's Manual*.
5. Adjust the engine speed to the following specifications:

High idle (no load)	Non-CE models	3450 ± 100 rpm
	CE models	3150 ± 100 rpm
Low idle (no load)	All models	1900 ± 100 rpm

Product Overview

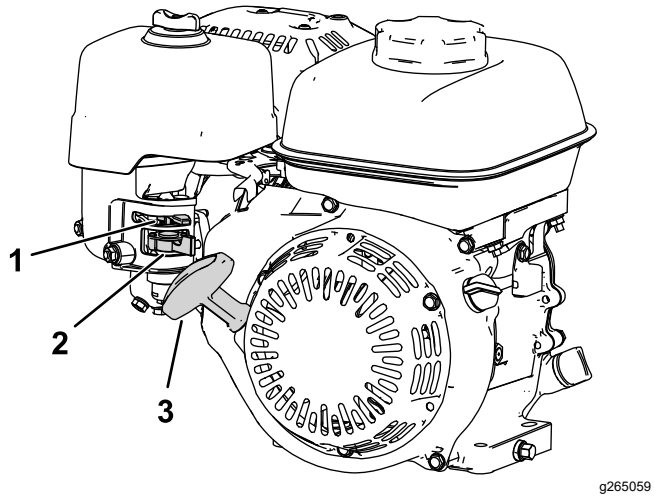

Figure 9

1. Choke lever
2. Fuel-shutoff valve
3. Recoil starter handle

Controls

Choke Control

The choke control is located on the side of the engine (Figure 9); you use it to help start a cold engine

Note: Do not start or run a warm engine with the choke in the CLOSED position.

- Move the choke lever all the way to the left (away from starter handle) to set the choke to the CLOSED position.
- Move the choke lever all the way to the right (toward starter handle) to set the choke to the OPEN position.

Fuel-Shutoff Valve

The fuel-shutoff valve is located on the side of the engine below the choke control (Figure 9).

Note: Close the fuel-shutoff valve when the machine is not used for a few days, during transport to and from the job site, or when the machine is parked inside a building; refer to Opening and Closing the Fuel-Shutoff Valve (page 9).

Operation

Fuel Specifications

Fuel tank capacity: 2.0 L (0.59 US gallons)

Recommended fuel: Unleaded gasoline with an octane rating of 87 or higher ((R+M)/2 rating method)

Ethanol: Gasoline with up to 10% ethanol (gasohol) or 15% MTBE (methyl tertiary butyl ether) by volume is acceptable. Ethanol and MTBE are not the same. Gasoline with 15% ethanol (E15) by volume is not approved for use.

- **Never use gasoline that contains more than 10% ethanol by volume**, such as E15 (contains 15% ethanol), E20 (contains 20% ethanol), or E85 (contains up to 85% ethanol).
- **Do not** use gasoline containing methanol.
- **Do not** store fuel either in the fuel tank or fuel containers over the winter unless a fuel stabilizer is used.
- **Do not** add oil to gasoline.
- For best results, use only clean, fresh (less than 30 days old) fuel.
- Using unapproved gasoline may cause performance problems and/or engine damage, which may not be covered under the warranty

Using Stabilizer/Conditioner

Important: **Do not use fuel additives containing methanol or ethanol.**

Add the correct amount of fuel stabilizer/conditioner to the gasoline.

Note: A fuel stabilizer/conditioner is most effective when mixed with fresh gasoline. To minimize the chance of varnish deposits in the fuel system, use fuel stabilizer at all times.

Filling the Fuel Tank

⚠ DANGER

In certain conditions, fuel is extremely flammable and highly explosive. A fire or explosion from fuel can burn you and others and can damage property.

- **Fill the fuel tank outdoors, in an open area, when the engine is cold. Wipe up any fuel that spills.**
- **Never fill the fuel tank inside an enclosed trailer.**
- **Do not fill the fuel tank completely full. Add fuel to the fuel tank until the level is 6 to 13 mm (1/4 to 1/2 inch) below the bottom of the filler neck. This empty space in the tank allows fuel to expand.**
- **Never smoke when handling fuel, and stay away from an open flame or where fuel fumes may be ignited by a spark.**
- **Store fuel in an approved container and keep it out of the reach of children. Never buy more than a 30-day supply of fuel.**
- **Do not operate without entire exhaust system in place and in proper working condition.**

⚠ DANGER

In certain conditions during fueling, static electricity can be released, causing a spark which can ignite the fuel vapors. A fire or explosion from fuel can burn you and others and can damage property.

- **Always place fuel containers on the ground away from your vehicle before filling.**
- **Do not fill fuel containers inside a vehicle or on a truck or trailer bed because interior carpets or plastic truck-bed liners may insulate the container and slow the loss of any static charge.**
- **When practical, remove equipment from the truck or trailer and fuel it on the ground. If this is not possible, then fuel such equipment with a portable container rather than from a fuel-dispenser nozzle.**
- **If you must use a fuel-dispenser nozzle, keep the nozzle in contact with the rim of the fuel tank or container opening at all times until fueling is complete.**

⚠ WARNING

Fuel is harmful or fatal if swallowed. Long-term exposure to vapors can cause serious injury and illness.

- **Avoid prolonged breathing of vapors.**
- **Keep your face away from the nozzle and fuel tank or conditioner bottle opening.**
- **Avoid contact with skin; wash off spills with soap and water.**

1. Park the machine on a level surface and shut off the engine.
2. Allow the engine to cool.
3. Clean around the fuel-tank cap and remove it (Figure 10).

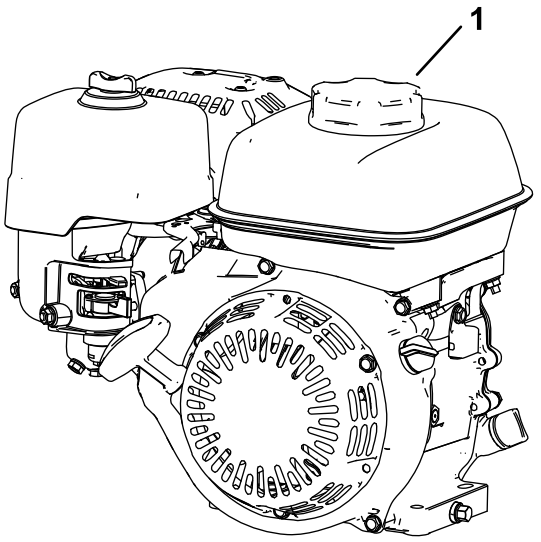

g265976

Figure 10

1. Fuel-tank cap

4. Fill the tank with fuel until the level is just inside the mesh filter basket.

   Do not fill into the filler neck of the tank.

   Important: **Do not fill the tank more above the filler mesh because the fuel needs room to expand.**
5. Install the fuel-tank cap securely.
6. Wipe up any spilled fuel.

Opening and Closing the Fuel-Shutoff Valve

Control fuel flow to the engine with the fuel-shutoff valve as follows:

- To open the fuel valve, turn the fuel-shutoff valve handle toward the recoil starter handle (Figure 11).
- To shut the fuel valve, turn the fuel-shutoff valve handle away from the recoil starter handle (Figure 11).

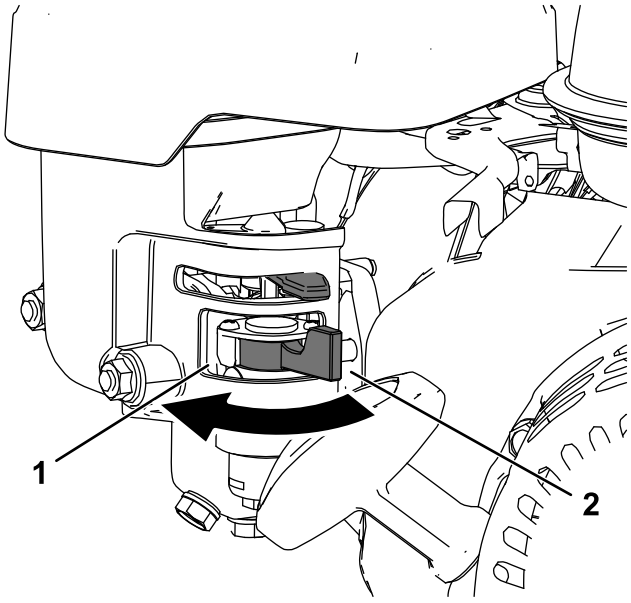

g265993

Figure 11

1. Turn the fuel valve lever to the ON position
2. Fuel valve lever in the OFF position

Maintenance

Important: **Refer to your engine owner's manual for additional maintenance procedures.**

Important: **The engine gearbox (Figure 12) does not require maintenance, as it is filled with a high-performance, long-life synthetic semi-fluid grease.**

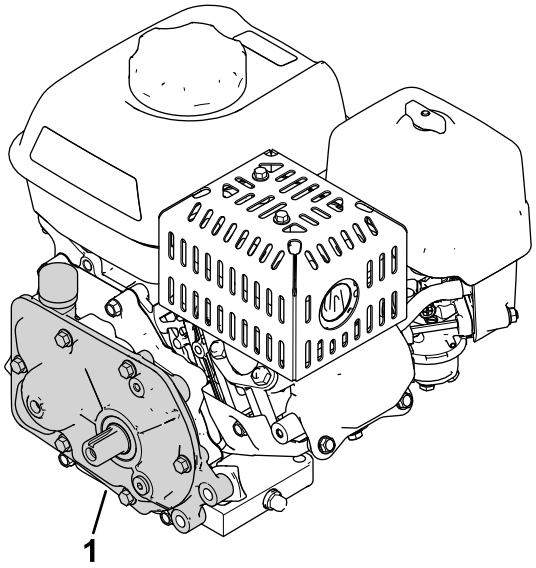

g312416

Figure 12

1. Gearbox

Recommended Maintenance Schedule(s)

Maintenance Service Interval	Maintenance Procedure
After the first 20 hours	• Change the engine oil.
Before each use or daily	• Check the engine-oil level. • Inspect the air-filter elements.
Every 50 hours	• Clean the air-filter elements.
Every 100 hours	• Change the engine oil. • Inspect and adjust the spark plug; replace it if necessary.
Every 300 hours	• Replace the paper filter element (More frequently in dusty operating conditions). • Replace the spark plug.

Preparing the Machine for Maintenance

⚠ WARNING

While you are maintaining or adjusting the machine, someone could start the engine. Accidentally starting the engine could seriously injure you or other bystanders.

Remove the key from the ignition, engage parking brake, and pull the wire(s) off the spark plug(s) before you do any maintenance. Also push the wire(s) aside so it does not accidentally contact the spark plug(s).

Perform the following before servicing, cleaning, or making any adjustments to the machine.

1. Park the machine on a level surface.
2. Shut off the engine and remove the key from the machine (if equipped).
3. Engage the parking brake.
4. Wait for all moving parts to stop and allow the engine to cool before servicing or storing.
5. Disconnect the spark-plug wire (Figure 13).

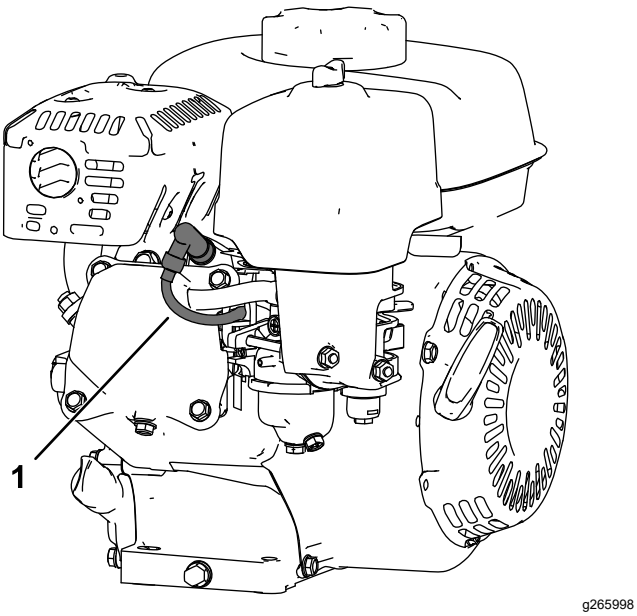

g265998

Figure 13

1. Spark-plug wire

Servicing the Engine Oil

Fill the crankcase with approximately 0.56 L (19 fl oz) of the proper viscosity oil before starting. The engine uses a high-quality oil that has the American Petroleum Institute (API) service classification of SJ or higher. Select the proper oil viscosity (weight) based on the ambient temperature. Figure 14 illustrates the temperature/viscosity recommendations.

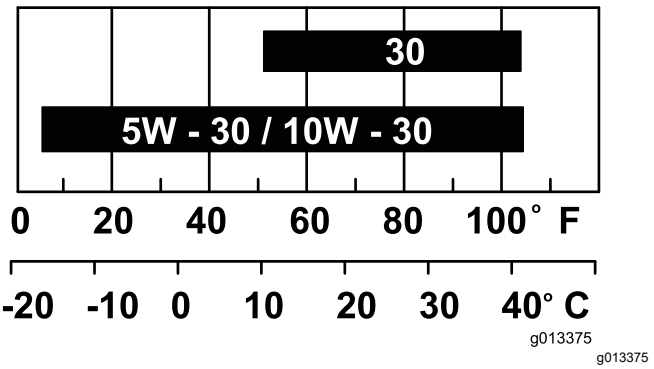

g013375

g013375

Figure 14

Note: Multi-grade oils (5W-20, 10W-30 and 10W-40) increase oil consumption. Check the engine-oil level more frequently when you use these oils.

Checking the Engine-Oil Level

Service Interval: Before each use or daily

The ideal time to check the engine-oil level is when the engine is cool or before you have started the engine for the day. If you have already ran the engine, allow the oil to drain back down to the sump for at least 10 minutes before you check the engine-oil level.

1. Shut off the engine and wait for all moving parts to stop; refer to Preparing the Machine for Maintenance (page 10).
2. Position the machine so that the engine is level, and clean the area around the oil-fill tube (Figure 15).

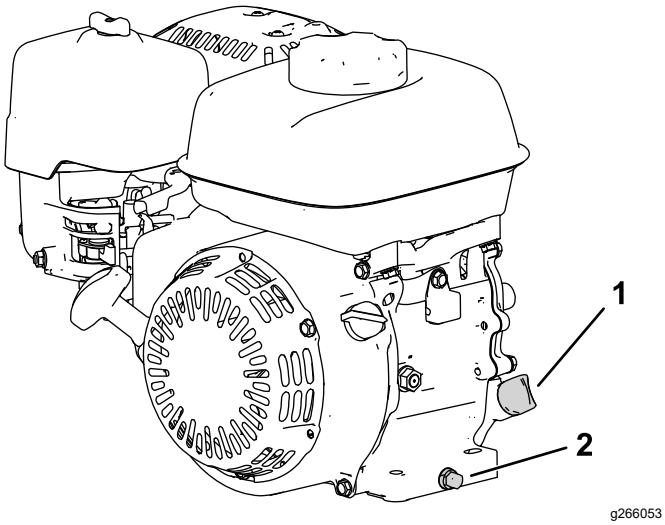

Figure 15

1. Dipstick
2. Drain plug and washer

3. Remove the dipstick by rotating it counterclockwise.
4. Remove the dipstick and wipe the end clean.
5. Insert the dipstick fully into the oil-fill tube, **but do not thread it in**.
6. Remove the dipstick and check the engine-oil level (Figure 16).

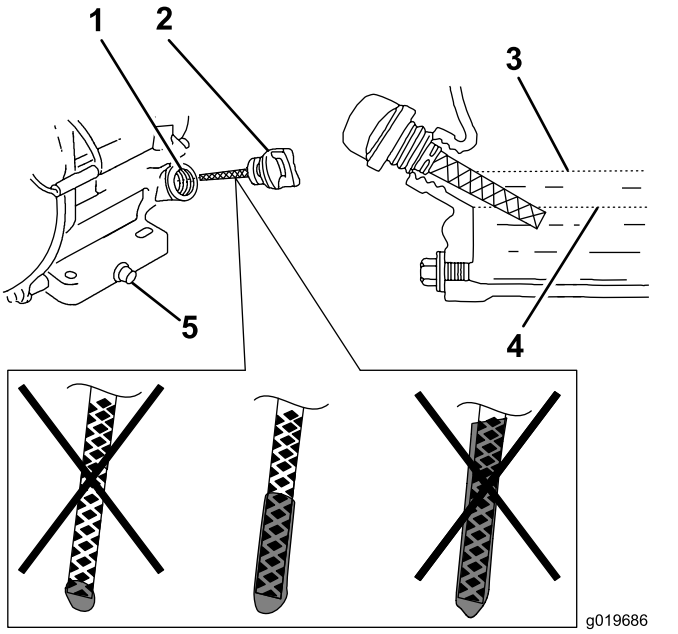

Figure 16

1. Filler tube
2. Dipstick
3. Upper limit
4. Lower limit
5. Drain plug

7. If the engine-oil level is incorrect, add or drain oil to correct the level; refer to Changing the Engine Oil (page 11).

Changing the Engine Oil

Service Interval: After the first 20 hours

Every 100 hours

⚠ WARNING

Oil may be hot after the engine has been run, and contact with hot oil can cause severe personal injury.

Avoid contacting the hot engine oil when you drain it.

1. Shut off the engine and wait for all moving parts to stop; refer to Preparing the Machine for Maintenance (page 10).
2. Raise the engine off the ground and place a pan under the drain plug to catch the oil.
3. Remove the drain plug (Figure 15).
4. When the oil has drained completely, lower the engine to the ground, replace the drain plug and washer, and torque the plug to 18 N·m (13 ft-lb).

   Note: Dispose of the used oil at a certified recycling center.
5. Remove the dipstick, and slowly pour oil into the oil-fill hole until the oil is at the correct level.
6. Ensure that the oil is at the correct level on the dipstick; refer to Checking the Engine-Oil Level (page 10).
7. Replace and secure the dipstick.
8. Wipe up any spilled oil.
9. Connect the wire to the spark plug.

Servicing the Air Cleaner

Service Interval: Before each use or daily

Every 50 hours

Every 300 hours/Yearly (whichever comes first)

Important: **Do not operate the engine without the air filter assembly; extreme engine damage will occur.**

1. Shut off the engine and wait for all moving parts to stop; refer to Preparing the Machine for Maintenance (page 10).
2. Remove the wingnut securing the air-cleaner cover (Figure 17).
3. Remove the air-cleaner cover.

   Note: Ensure that no dirt or debris from the air-cleaner cover fall into the base.
4. Remove the foam and paper elements from the base.
5. Remove the foam element from the paper element.
6. Inspect the foam and paper elements; replace them if they are damaged or excessively dirty.

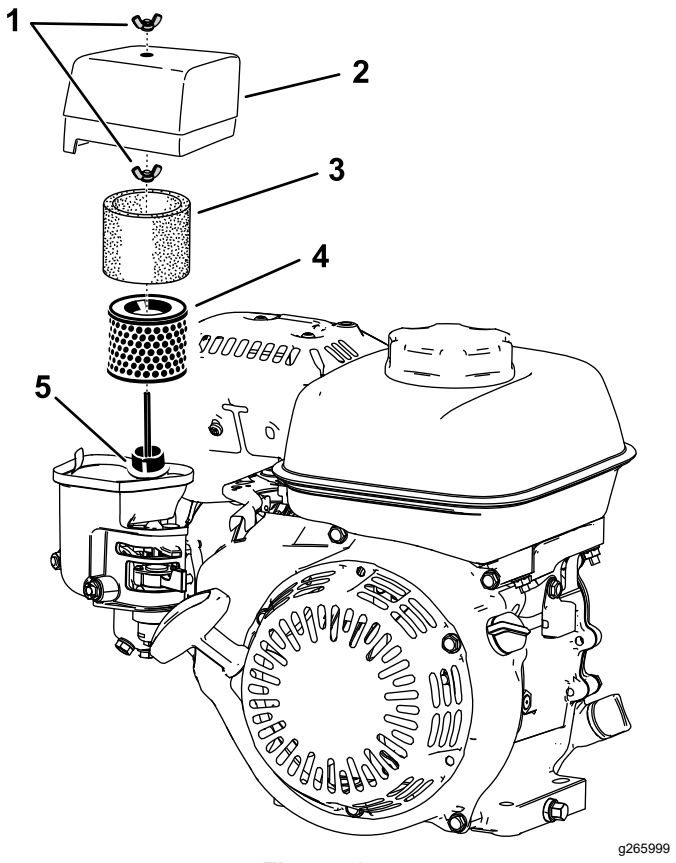

Figure 17

1. Wing nut
2. Air-cleaner cover
3. Foam element
4. Paper filter element
5. Gasket and air duct

7. Clean the paper element by tapping it gently to remove the dirt.

   Note: Do not try to brush dirt off the paper element; brushing forces the dirt into the fibers. Replace the element if tapping it fails to remove the dirt.
8. Clean the foam element in warm, soapy water or in a nonflammable solvent.

   Note: Do not use gasoline to clean the foam element because it could create a risk of fire or explosion.
9. Rinse and dry the foam element thoroughly.
10. Wipe dirt from the base and the cover with a moist rag.

    Note: Ensure that dirt and debris do not enter the air duct leading to the carburetor.
11. Install the air-cleaner elements and ensure that they are properly positioned. Install the lower wing nut.
12. Install the cover and install the upper wing nut to secure it.

Servicing the Spark Plug

Service Interval: Every 100 hours

Every 300 hours

Use an NGK BPR6ES spark plug or equivalent.

1. Shut off the engine and wait for all moving parts to stop; refer to Preparing the Machine for Maintenance (page 10).
2. Clean around the spark plug.
3. Remove the spark plug from the cylinder head.

   Important: **Replace a cracked, fouled, or dirty spark plug. Do not sand blast, scrape, or clean the electrodes because engine damage could result from grit entering the cylinder.**
4. Set the gap on the plug to 0.7 to 0.8 mm (0.028 to 0.031 inch)

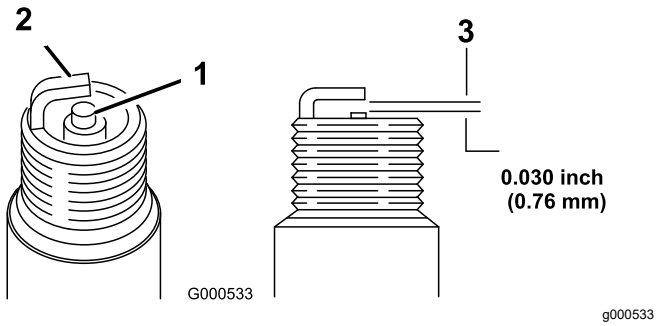

Figure 18

1. Center-electrode insulator
2. Side electrode
3. Air gap

5. Carefully install the spark plug by hand (to avoid cross threading) until it is hand tight.
6. Tighten the spark plug an additional 1/2 turn if it is new; otherwise, tighten it an additional 1/8 to 1/4 turn.

   Important: **A loose spark plug can become very hot and can damage the engine; overtightening a spark plug may damage the threads in the cylinder head.**
7. Connect the wire to the spark plug.

Notes:

Notes:

California Proposition 65 Warning Information

What is this warning?

You may see a product for sale that has a warning label like the following:



WARNING: Cancer and Reproductive Harm—www.p65Warnings.ca.gov.

What is Prop 65?

Prop 65 applies to any company operating in California, selling products in California, or manufacturing products that may be sold in or brought into California. It mandates that the Governor of California maintain and publish a list of chemicals known to cause cancer, birth defects, and/or other reproductive harm. The list, which is updated annually, includes hundreds of chemicals found in many everyday items. The purpose of Prop 65 is to inform the public about exposure to these chemicals.

Prop 65 does not ban the sale of products containing these chemicals but instead requires warnings on any product, product packaging, or literature with the product. Moreover, a Prop 65 warning does not mean that a product is in violation of any product safety standards or requirements. In fact, the California government has clarified that a Prop 65 warning "is not the same as a regulatory decision that a product is 'safe' or 'unsafe.'" Many of these chemicals have been used in everyday products for years without documented harm. For more information, go to https://oag.ca.gov/prop65/faqs-view-all.

A Prop 65 warning means that a company has either (1) evaluated the exposure and has concluded that it exceeds the "no significant risk level"; or (2) has chosen to provide a warning based on its understanding about the presence of a listed chemical without attempting to evaluate the exposure.

Does this law apply everywhere?

Prop 65 warnings are required under California law only. These warnings are seen throughout California in a wide range of settings, including but not limited to restaurants, grocery stores, hotels, schools, and hospitals, and on a wide variety of products. Additionally, some online and mail order retailers provide Prop 65 warnings on their websites or in catalogs.

How do the California warnings compare to federal limits?

Prop 65 standards are often more stringent than federal and international standards. There are various substances that require a Prop 65 warning at levels that are far lower than federal action limits. For example, the Prop 65 standard for warnings for lead is 0.5 µg/day, which is well below the federal and international standards.

Why don't all similar products carry the warning?

- Products sold in California require Prop 65 labelling while similar products sold elsewhere do not.
- A company involved in a Prop 65 lawsuit reaching a settlement may be required to use Prop 65 warnings for its products, but other companies making similar products may have no such requirement.
- The enforcement of Prop 65 is inconsistent.
- Companies may elect not to provide warnings because they conclude that they are not required to do so under Prop 65; a lack of warnings for a product does not mean that the product is free of listed chemicals at similar levels.

Why does Toro include this warning?

Toro has chosen to provide consumers with as much information as possible so that they can make informed decisions about the products they buy and use. Toro provides warnings in certain cases based on its knowledge of the presence of one or more listed chemicals without evaluating the level of exposure, as not all the listed chemicals provide exposure limit requirements. While the exposure from Toro products may be negligible or well within the "no significant risk" range, out of an abundance of caution, Toro has elected to provide the Prop 65 warnings. Moreover, if Toro does not provide these warnings, it could be sued by the State of California or by private parties seeking to enforce Prop 65 and subject to substantial penalties.