Form No. 3480-581 Rev A

TORO®

Count on it.

Parts Catalog

Engine Conversion Kit, Subaru Powered Walk-Behind Fixed Head Greensmaster® 800, 1000, 1010, 1600, or 1610 Mower

Model No. 161-7433

Register at www.Toro.com.
Original Instructions (EN)

3480-581 A

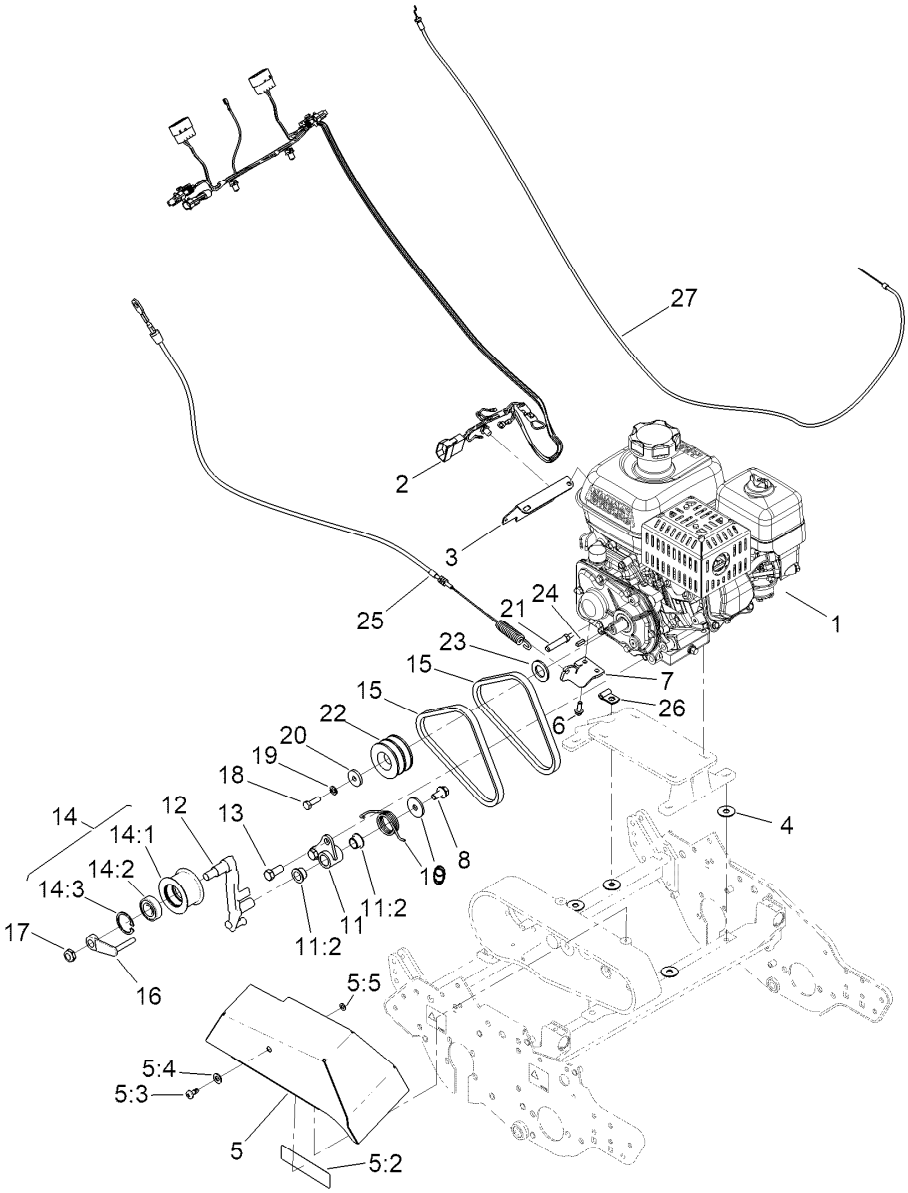

EPA Engine Conversion Kit Assembly No. 161-7433

Ref.	*Part Number*	*Qty.*	*Description*
1		1	Engine/Gearbox ASM, Epa ●
2	122-1227	1	Harness-Wire
3	138-2050	1	Plate-Harness, Wire
4	119-4150	4	Washer-Flat
5	138-2053	1	Bellcrank Cover ASM
5:2	125-5245	1	Decal-Danger, Shields
5:3	93-6074	1	Stud
5:4	3256-70	1	Washer-Flat
5:5	93-6073	1	Washer-Nylon
6	115-5103	2	Screw-HHF
7	139-5611	1	Bracket-Cable, Traction
8	110-1718	1	Screw-HHSF,Patch
9	138-2145	1	Washer-Flat
10	137-2363	1	Spring-Torque, Clutch Lever
11	137-2357	1	Clutch Bracket ASM
11:2	108-2973	2	Bushing-Flange
12	137-2397	1	Lever-Clutch
13	324-4	2	Screw-HH

Ref.	*Part Number*	*Qty.*	*Description*
14	112-9385	1	Idler Pulley ASM
14:1	98-7297	1	Pulley-Idler
14:2	38-7820	2	Bearing-Ball
14:3	32120-42	1	Ring-Retaining
15	92-9218	2	Belt-V, Matched Set
16	112-9390	1	Guide-Belt
17	3296-45	1	Nut-Hex
18	322-5	1	Screw-HH
19	3253-4	1	Washer-Lock
20	65-8270	1	Washer
21	137-2358	1	Shaft-Pivot, Traction
22	137-2362	1	Pulley-Drive
23	33099-00	1	Washer-Flat
24	94-8850	1	Key-Square
25	139-5605	1	Cable ASM-Clutch
26	133-2367	1	Clip
27	120-2737	1	Cable-Throttle (GR1600 Only)

● Not serviced separately

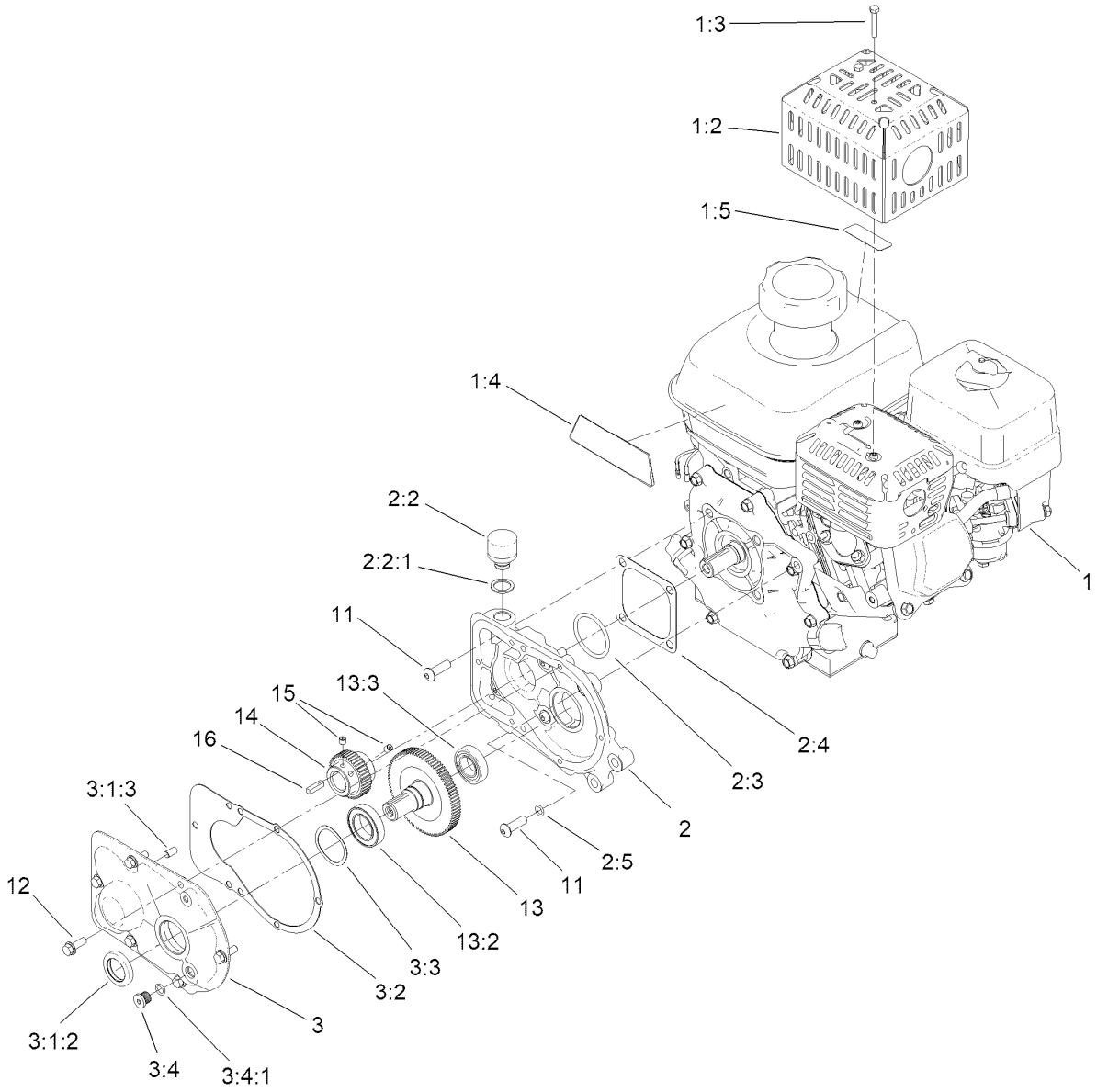

Engine Gearbox Assembly

Ref.	Part Number	Qty.	Description
1	161-7372	1	Engine ASM, Honda
1:2	138-2128-03	1	Guard-Muffler
1:3	87-5150	2	Screw-HH
1:4	138-2138	1	Decal-Warning, Engine
1:5	130-8322	1	Decal-Warning, Ethanol
1:6	133-8062	1	Decal-Spark Arrestor ●
2	138-2119	1	Housing ASM
2:2	133-2359	1	Breather-Vent, Nylon
2:2:1	133-5659	1	Washer-Rubber
2:3	136-7265	1	O-Ring
2:4	136-7266	1	Gasket-Flange
2:5	360-0107	1	O-Ring
3	138-2120	1	Cover ASM
3:1:2	136-7258	1	Seal-Oil

Ref.	Part Number	Qty.	Description
3:1:3	95-0715	2	Pin-Dowel
3:2	136-7289	1	Gasket-Housing
3:3	136-7272	1	Spring-Wave
3:4	353-990	1	Plug ASM
3:4:1	237-78	1	O-Ring
11	138-2123	5	Screw-HSBH
12	115-5103	6	Screw-HHF
13	138-2127	1	Output Shaft ASM
13:2	132-0745	1	Bearing
13:3	136-7264	1	Bearing
14	136-7269	1	Gear, 42 Tooth
15	3245-32	2	Screw-HSH
16	10-8040	1	Key-Square

● Not illustrated



Count on it.