Form No. 3452-197 Rev C

TORO®

Count on it.

Parts Catalog

Box Blade Attachment Holder

Field Pro® 6040

Model No. 08861

Register at www.Toro.com.
Original Instructions (EN)

3452-197 C

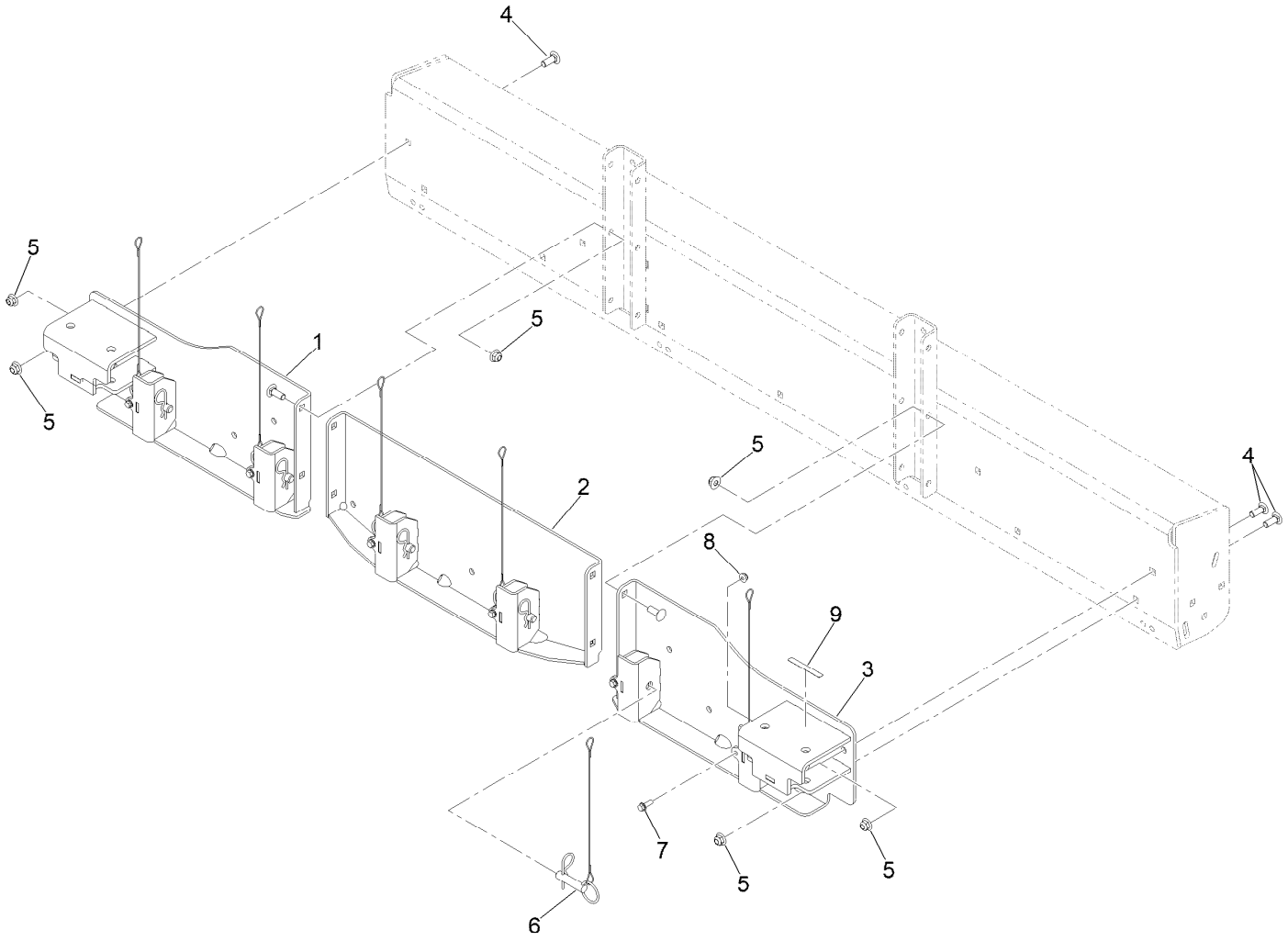

Box Blade Attachment Holder Kit Assembly

Ref.	*Part Number*	*Qty.*	*Description*
1	145-7382-03	1	Tool Holder, LH
2	145-7383-03	1	Holder-Tool, Mid
3	145-7384-03	1	Holder-Tool, RH
4	3231-22	19	Screw-CARR
5	119-4042	19	Nut-HF, NI
6	1-633097	6	Pin-Hitch (W/Lanyard)
7	115-5103	6	Screw-HHF
8	104-7201	6	Nut-HF, NI
9	133-8061	1	Decal-Warning