Form No. 3479-988 Rev B

Box Blade Attachment Holder

Field Pro® 6040 Infield Groomer

Model No. 08861

Installation Instructions

⚠ WARNING

CALIFORNIA
Proposition 65 Warning

Use of this product may cause exposure to chemicals known to the State of California to cause cancer, birth defects, or other reproductive harm.

Safety

Safety-Alert Symbol

The safety-alert symbol (Figure 1) shown in this manual and on the machine identifies important safety messages that you must follow to prevent accidents.



g000502

Figure 1
Safety-alert symbol

The safety-alert symbol appears above information that alerts you to unsafe actions or situations and is followed by the word **DANGER**, **WARNING**, or **CAUTION**.

DANGER indicates an imminently hazardous situation which, if not avoided, **will** result in death or serious injury.

WARNING indicates a potentially hazardous situation which, if not avoided, **could** result in death or serious injury.

CAUTION indicates a potentially hazardous situation which, if not avoided, **may** result in minor or moderate injury.

This manual uses two other words to highlight information. **Important** calls attention to special mechanical information and **Note** emphasizes general information worthy of special attention.

Safety and Instructional Decals



Safety decals and instructions are easily visible and are located near areas of potential danger. Replace every damaged or missing decal.



decal133-8061

133-8061

© 2026—The Toro® Company
8111 Lyndale Avenue South
Bloomington, MN 55420

Register at www.Toro.com.

Original Instructions (EN)
Printed in the USA
All Rights Reserved

3479-988

Installation

Loose Parts

Use the chart below to verify that all parts have been shipped.

Description	Qty.	Use
No parts required	–	Prepare the machine.
Left box blade attachment holder Middle box blade attachment holder Right box blade attachment holder Carriage bolt (3/8 x 1 inch) Nut (3/8 inch) Hitch pin with hairpin cotter Bolt (1/4 x 3/4 inch) Nut (1/4 inch)	1 1 1 19 19 6 6 6	Install the box blade attachment holder.

Note: Determine the left and right sides of the machine from the normal operating position.

Preparing the Machine

1. Park the machine on a level surface or move the machine to a machine lift.
2. Engage the parking brake.
3. Raise the mid-mount attachment. Insert the depth control pin into the TRANSPORT (T) position to keep the mid-mount attachment up.
4. Shut off the engine and remove the key.
5. Wait for all moving parts to stop and machine components to cool.
6. Chock the wheels or raise the machine with a machine lift.

Installing the Box Blade Attachment Holder

1. Loosely secure the left box blade attachment holder to the mid-mount attachment bracket using 2 carriage bolts (3/8 x 1 inch) and 2 nuts (3/8 inch).

   Repeat the same step for the right box blade attachment.

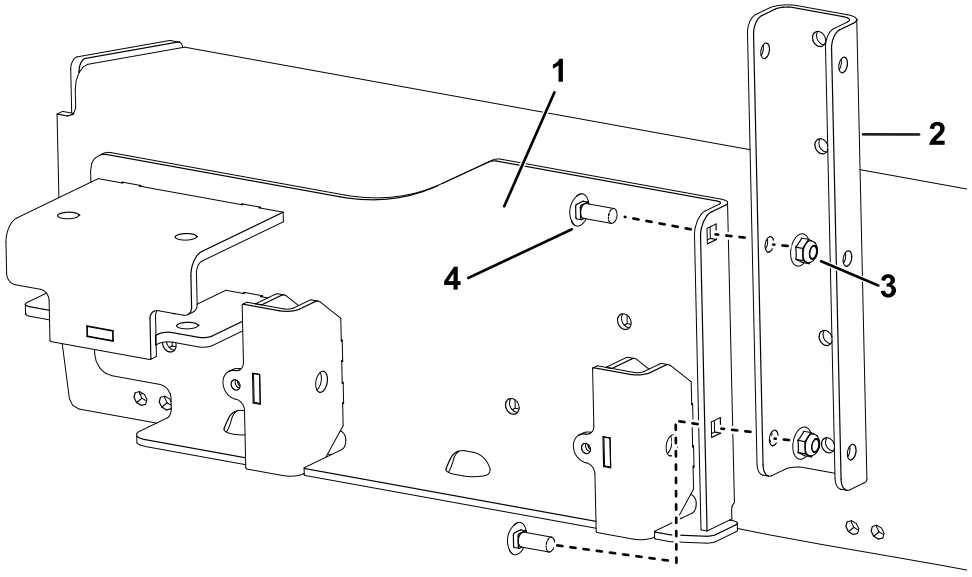

g583165

Figure 2

1. Left box blade attachment holder
2. Mid-mount attachment bracket
3. Nut (3/8 inch)
4. Carriage bolt

2. Loosely secure the middle box blade attachment holder to the mid-mount attachment brackets using 4 carriage bolts (3/8 x 1 inch) and 4 nuts (3/8 inch).

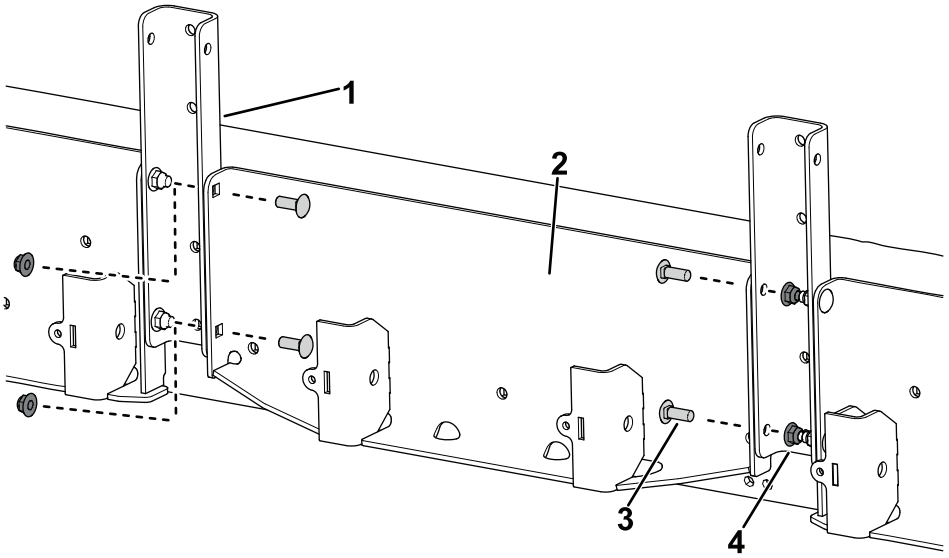

g583213

Figure 3

1. Mid-mount attachment bracket
2. Middle box blade attachment holder
3. Carriage bolt
4. Nut (3/8 inch)

3. Secure all of the box blade attachment holders to the mid-mount attachment using 11 carriage bolts (3/8 x 1 inch) and 11 nuts (3/8 inch).

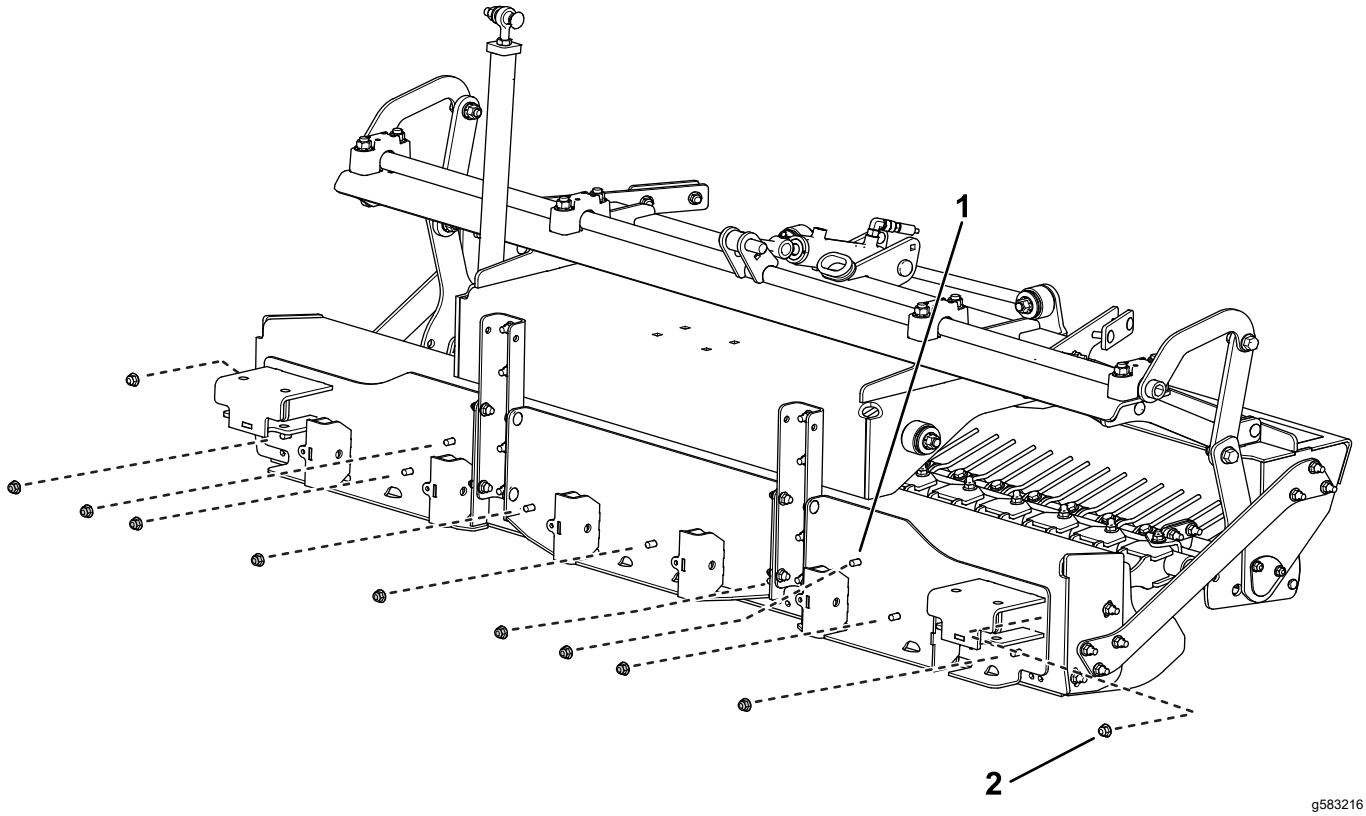

Figure 4

1. Carriage bolt (3/8 x 1 inch)
2. Nut (3/8 inch)

4. Secure the 6 bolts (1/4 x 3/4 inch) and 6 nuts (1/4 inch) into the box blade attachment holder.

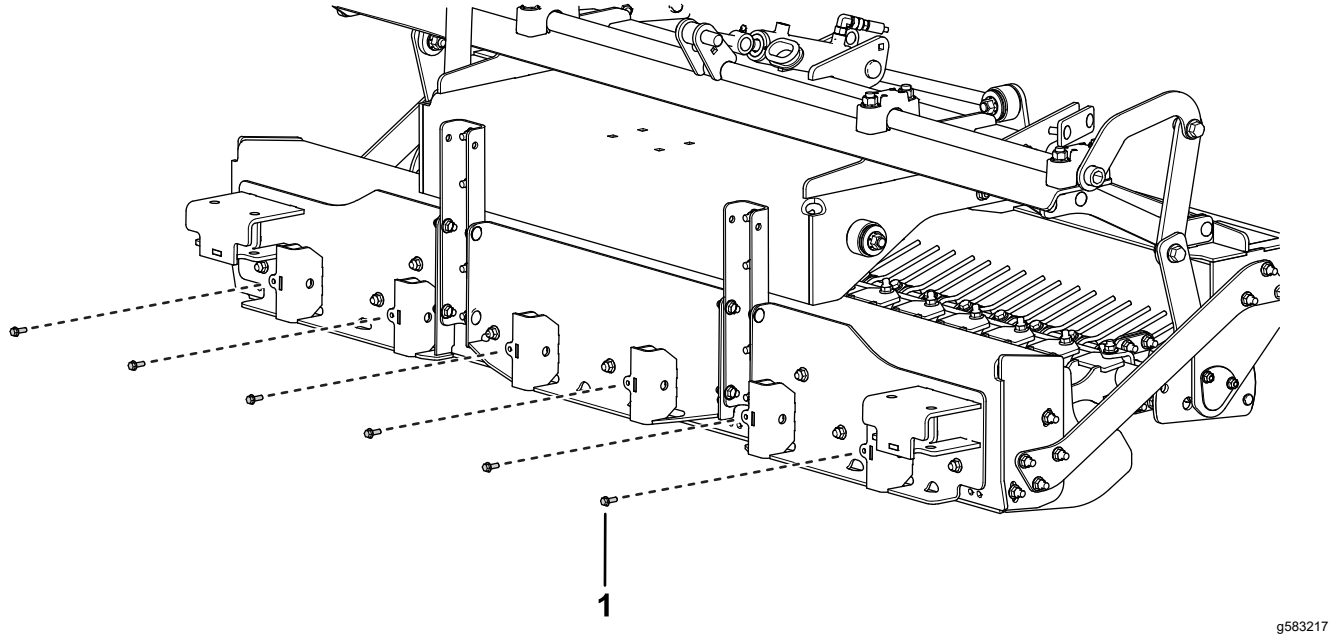

Figure 5

1. Bolt (1/4 x 3/4 inch)

5. Install the 6 hitch pins into the box blade attachment holder bracket sleeves and secure using the hairpin cotters as shown in the following figure.

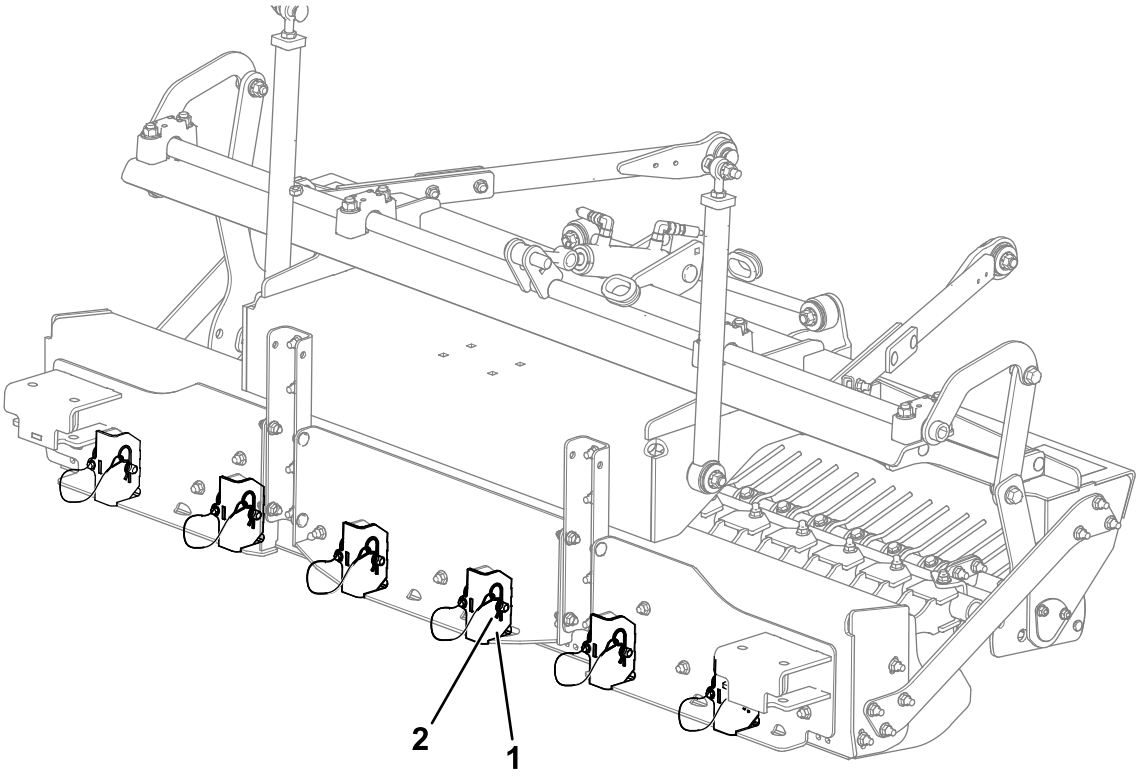

g583218

Figure 6

1. Bracket sleeve
2. Hitch pin with hairpin cotter

Notes:

California Proposition 65 Warning Information

What is this warning?

You may see a product for sale that has a warning label like the following:



WARNING: Cancer and Reproductive Harm—www.p65Warnings.ca.gov.

What is Prop 65?

Prop 65 applies to any company operating in California, selling products in California, or manufacturing products that may be sold in or brought into California. It mandates that the Governor of California maintain and publish a list of chemicals known to cause cancer, birth defects, and/or other reproductive harm. The list, which is updated annually, includes hundreds of chemicals found in many everyday items. The purpose of Prop 65 is to inform the public about exposure to these chemicals.

Prop 65 does not ban the sale of products containing these chemicals but instead requires warnings on any product, product packaging, or literature with the product. Moreover, a Prop 65 warning does not mean that a product is in violation of any product safety standards or requirements. In fact, the California government has clarified that a Prop 65 warning "is not the same as a regulatory decision that a product is 'safe' or 'unsafe.'" Many of these chemicals have been used in everyday products for years without documented harm. For more information, go to https://oag.ca.gov/prop65/faqs-view-all.

A Prop 65 warning means that a company has either (1) evaluated the exposure and has concluded that it exceeds the "no significant risk level"; or (2) has chosen to provide a warning based on its understanding about the presence of a listed chemical without attempting to evaluate the exposure.

Does this law apply everywhere?

Prop 65 warnings are required under California law only. These warnings are seen throughout California in a wide range of settings, including but not limited to restaurants, grocery stores, hotels, schools, and hospitals, and on a wide variety of products. Additionally, some online and mail order retailers provide Prop 65 warnings on their websites or in catalogs.

How do the California warnings compare to federal limits?

Prop 65 standards are often more stringent than federal and international standards. There are various substances that require a Prop 65 warning at levels that are far lower than federal action limits. For example, the Prop 65 standard for warnings for lead is 0.5 µg/day, which is well below the federal and international standards.

Why don't all similar products carry the warning?

- Products sold in California require Prop 65 labelling while similar products sold elsewhere do not.
- A company involved in a Prop 65 lawsuit reaching a settlement may be required to use Prop 65 warnings for its products, but other companies making similar products may have no such requirement.
- The enforcement of Prop 65 is inconsistent.
- Companies may elect not to provide warnings because they conclude that they are not required to do so under Prop 65; a lack of warnings for a product does not mean that the product is free of listed chemicals at similar levels.

Why does Toro include this warning?

Toro has chosen to provide consumers with as much information as possible so that they can make informed decisions about the products they buy and use. Toro provides warnings in certain cases based on its knowledge of the presence of one or more listed chemicals without evaluating the level of exposure, as not all the listed chemicals provide exposure limit requirements. While the exposure from Toro products may be negligible or well within the "no significant risk" range, out of an abundance of caution, Toro has elected to provide the Prop 65 warnings. Moreover, if Toro does not provide these warnings, it could be sued by the State of California or by private parties seeking to enforce Prop 65 and subject to substantial penalties.



Count on it.