FORM NO. 3312-604

TORO®

MODEL NO. 20676-5000001 & UP

PARTS CATALOG

21" S.P. REAR BAGGER KEY-LECTRIC

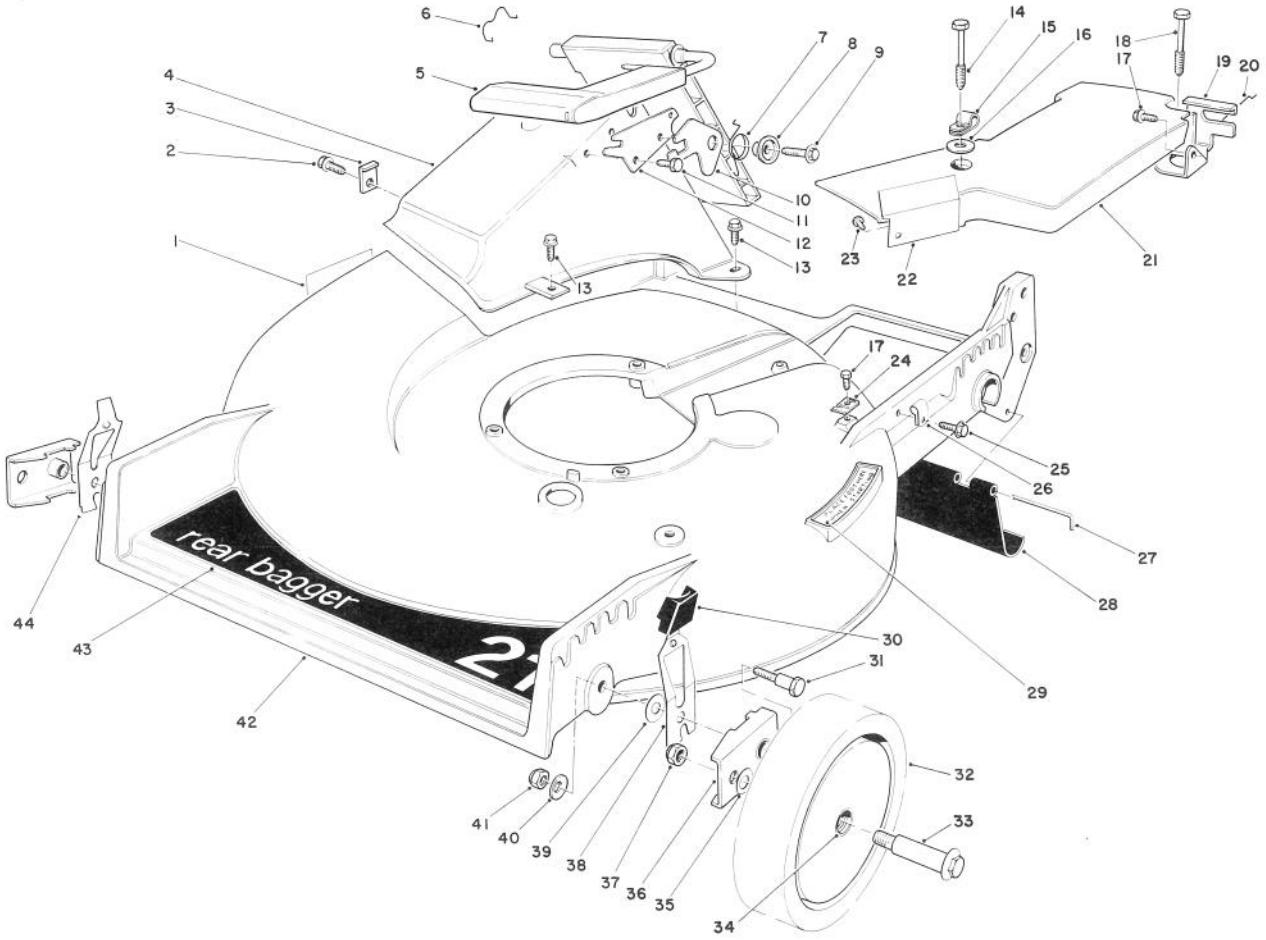

HOUSING ASSEMBLY

Ref. No.	Part No.	Description	No. Used
1	43-8480	Decal — Danger	1
2	12-3270	Screw — Thread Forming	1
3	47-6540	Clip — Tunnel	1
4	46-3500	Tunnel — Discharge	1
5	51-0200	Discharge Door Assembly	1
6	47-5840	Retainer — Door	1
7	33-4860	Spring — Torsion	1
8	43-4840	Spacer — Latch	1
9	46-8091	Screw — Self Tapping, Hex Washer Hd.	1
10	42-4010	Latch — Safety	1
11	46-8090	Screw — Self Tapping, Hex Washer Hd.	1
12	23-1040	Plate — Latch	1
13	46-6811	Screw — Hex Washer Hd.	3

Ref. No.	Part No.	Description	No. Used
14	37-7262	Capscrew — Special	1
15	2412-87	Clamp — Cable	1
16	3-5792	Washer — Flat	1
17	32144-11	Screw — Thread Forming, Hex Washer Hd.	2
18	37-7260	Capscrew — Special	1
19	46-5870	Bracket — Traction Adjustment	1
20	46-7030	Retainer — Cable	1
21	52-7400	Belt Cover Assembly (Incl. Ref. #22 & 23)	1
22	38-8730	Shield — Heat	1
23	3295-35	Rivet	2
24	46-5610	Clamp — Cable	1
25	12-5450	Screw — Self Tapping, Slotted Hex Hd.	1

PRICE $1.00

© The Toro Company — 1985

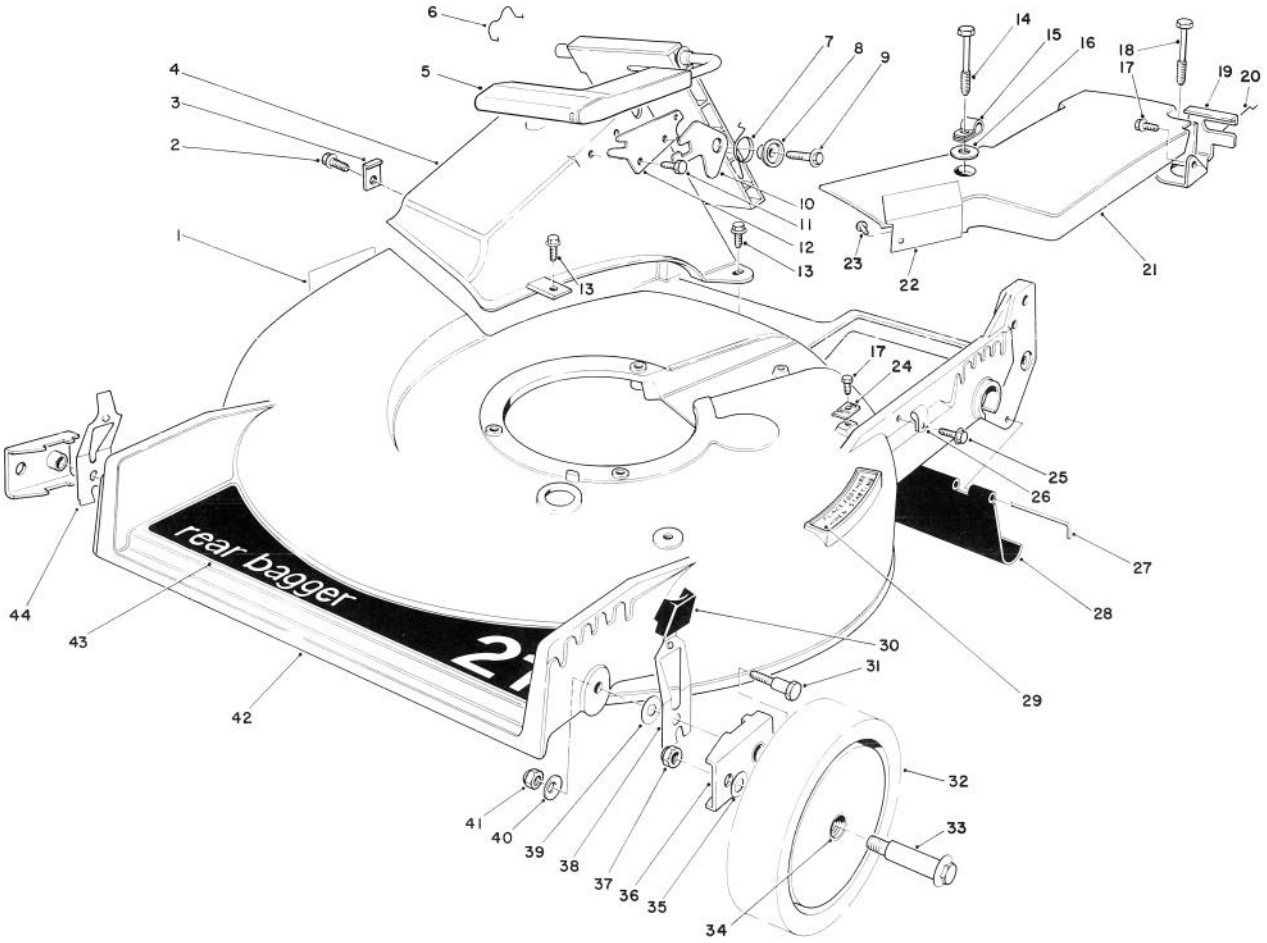

HOUSING ASSEMBLY (Continued)

Ref. No.	Part No.	Description	No. Used
26	2412-83	R-Clamp	1
27	33-3208	Rod — Shield	1
28	44-0580	Shield — Rear	1
29	46-7370	Decal — Step Pad	1
30	25-7740	Knob — Spring Arm	2
31	44-5270	Screw — Pivot	2
32	11-9509	Wheel & Tire Assembly (Incl. Ref. #34)	2
33	27-6231	Bolt — Wheel	2
34	27-6250	Bushing — Wheel	4

Ref. No.	Part No.	Description	No. Used
35	40-1940	Washer — Wheel Bolt	2
36	47-2940	Arm — Pivot	2
37	3296-6	Locknut	2
38	52-7480	Spring Arm Assembly L.H.	1
39	5-4460	Washer — Pivot	2
40	3290-456	Washer — Belleville	2
41	3296-29	Locknut	2
42	11-4099	Housing (Incl. Ref. #1, 13 & 29)	1
43	44-0450	Decal — 21" Rear Bagger	1
44	52-7490	Spring Arm Assembly R.H.	1

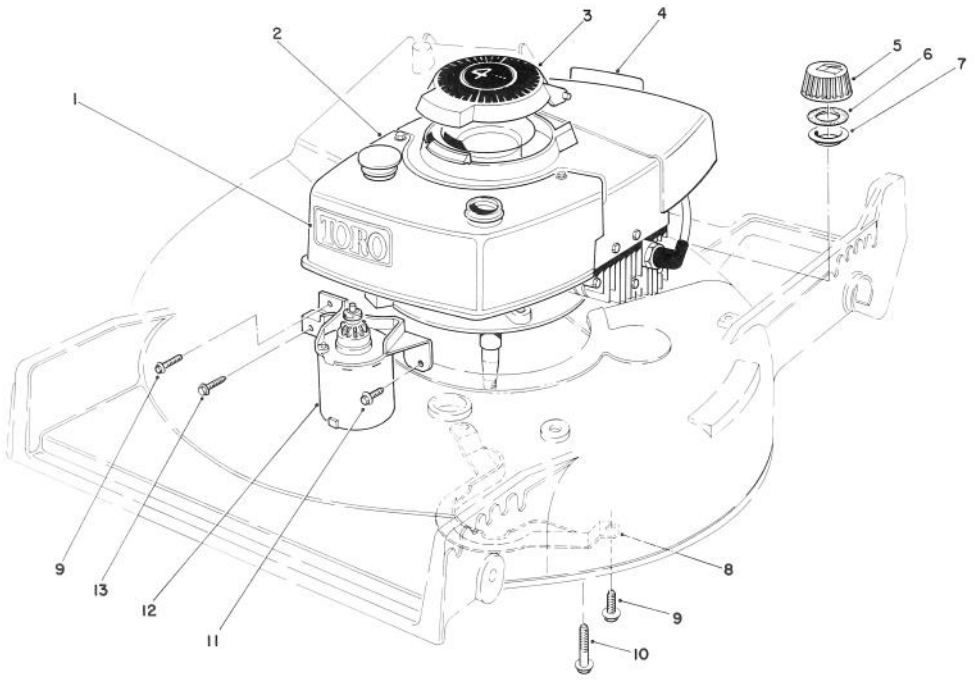

ENGINE ASSEMBLY

Ref. No.	Part No.	Description	No. Used
1	44-0510	Decal — Toro	1
2	221-763	Engine	1
3	38-4720	Cover Assembly	1
4	37-1580	Decal — Maintenance	1
5	42-0682	Gas Cap (Incl. Ref. #6 & 7)	1
6	2210-144	Gasket — Gas Cap	1
7	2210-143	Baffle	1

Ref. No.	Part No.	Description	No. Used
8	40-5720	Guide — Belt	1
9	11-9760	Screw — Thread Forming	3
10	11-0581	Screw — Thread Forming	3
11	12-3270	Screw — Special	1
12	49-4210	Starter Motor Assembly	1
13	46-6810	Screw — Special	1
*	33-2930	Rope — Starter	1

*Not Illustrated

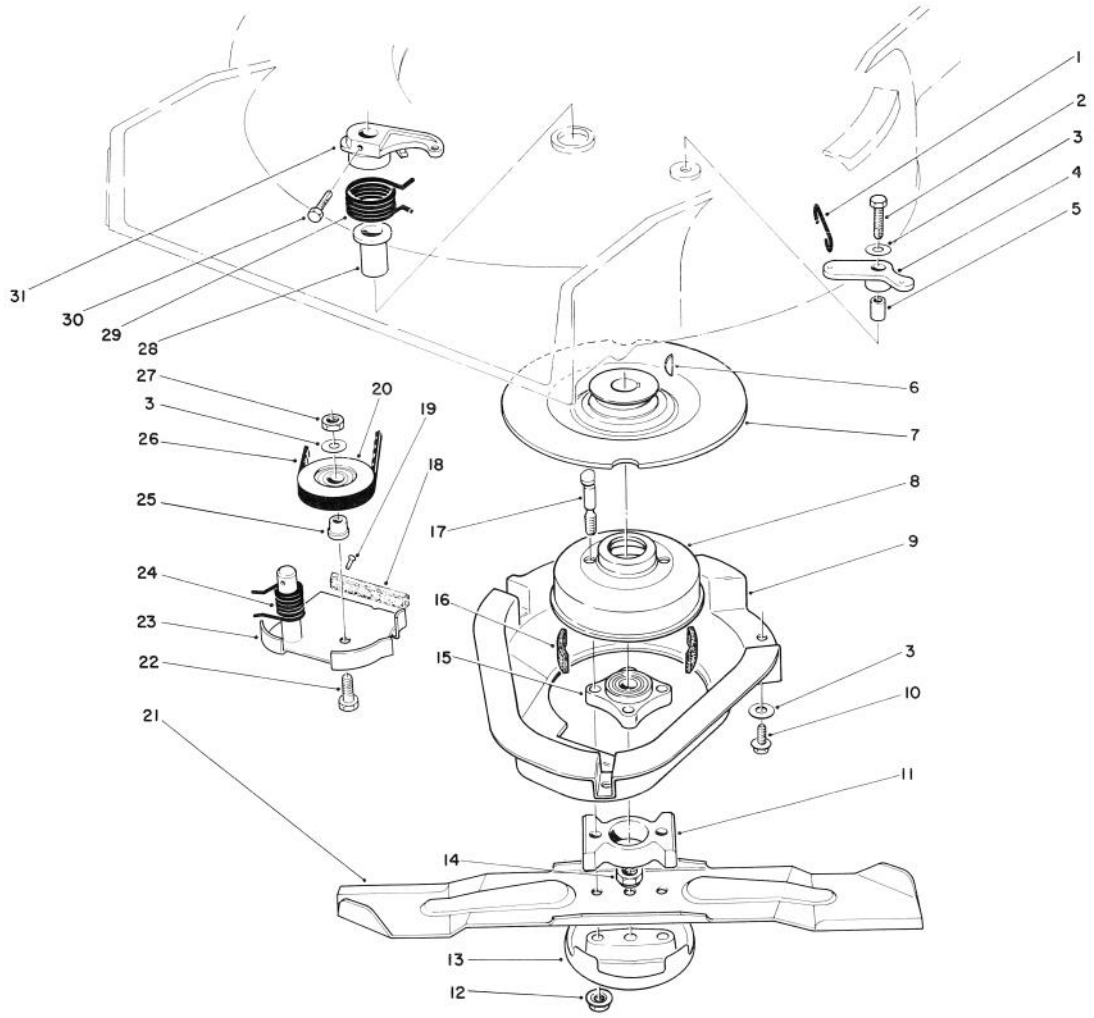

BLADE BRAKE CLUTCH ASSEMBLY

Ref. No.	Part No.	Description	No. Used
1	49-2810	Link — Control	1
2	32104-107	Screw — Self Tap Hex. Hd.	1
3	3256-23	Washer — Plain	5
4	49-7960	Bell Crank	1
5	49-7950	Sleeve — Bell Crank	1
6	3257-3	Key Woodruff	1
7	43-7721	Flywheel	1
8	42-1020	Drum — Brake	1
9	46-5690	Shield	1
10	32144-11	Screw — Thread Forming Hex. Washer Hd.	3
11	42-6760	Spacer — Blade	1
12	54-9190	Nut — Lock	2
13	42-0910	Cup — Anti Scalp	1
14	3296-33	Nut — Lock	1
15	42-6890	Hub Assembly	1
16	52-3480	Dampener — Vibration	2

Ref. No.	Part No.	Description	No. Used
17	42-3190	Bolt — Blade	2
18		Pad — Brake (Inc. Ref. #23)	1
19	3295-23	Rivet — Semi Tubular	2
20	46-5650	Pulley Idler	1
21	42-1000	Blade 21"	1
22	322-16	Capscrew	1
23	49-7921	Brake Plate (Incl. Ref. #18 & 19)	1
24	46-5670	Spring — Torsion Lower	1
25	46-5630	Hub — Idler Pulley	1
26	42-0882	V-Belt	1
27	3296-47	Nut — Lock	1
28	46-6680	Bushing — Flanged	1
29	49-7970	Spring — Torsion Upper	1
30	32104-96	Screw — Self Tap Hex. Hd.	1
31	49-2820	Lever	1

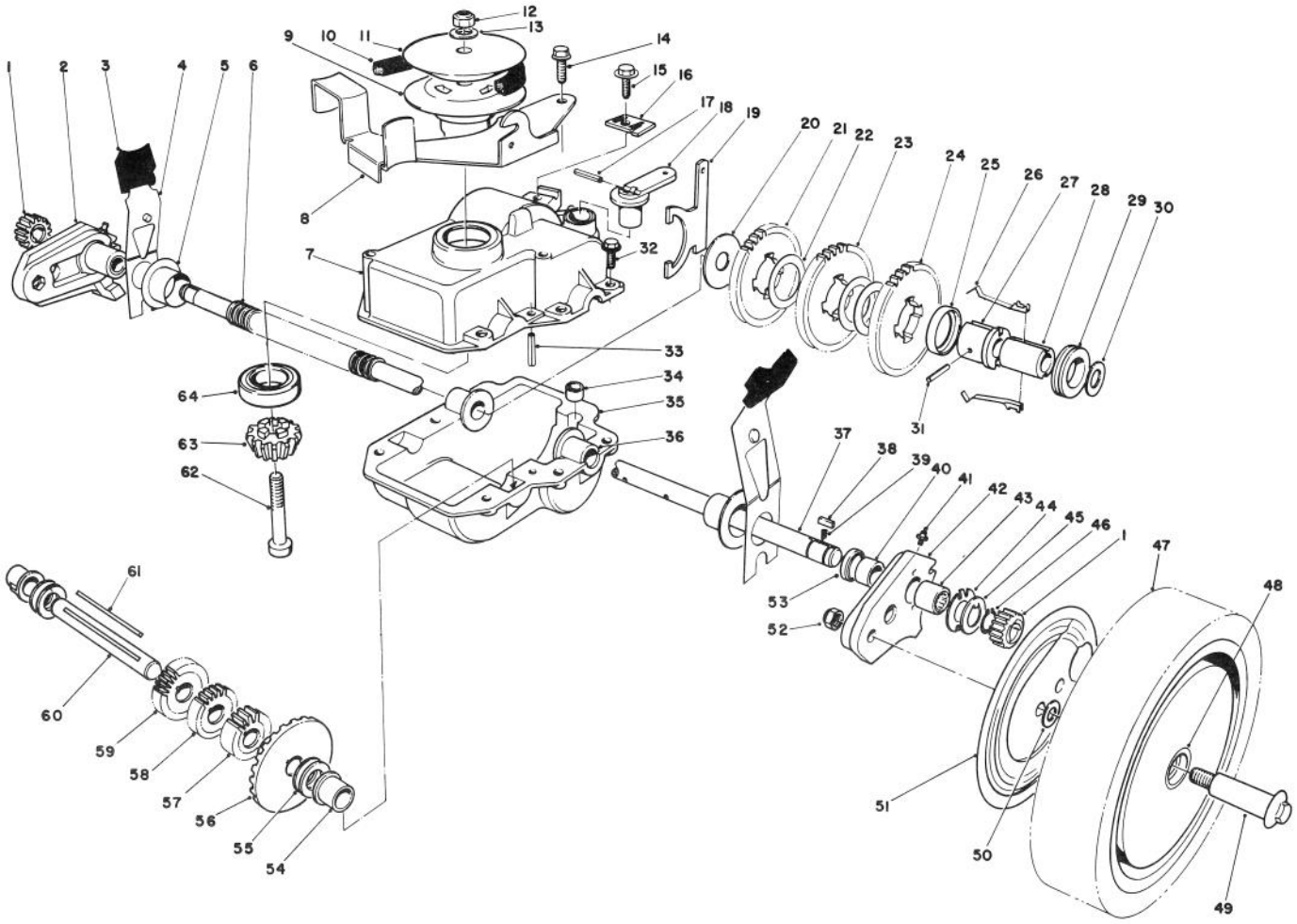

GEAR CASE ASSEMBLY

Ref. No.	Part No.	Description	No. Used
1	39-9160	Pinion	2
2	49-7720	Pivot Arm Assembly — R.H. (Incl. Ref. #40, 41, 43 & 53)	1
3	25-7740	Knob — Arm	2
4	44-1010	Spring Arm Assembly	2
5	42-3520	End Cap	2
6	24-7922	Cover — Drive Shaft	1
7	49-8370	Case — Upper	1
8	49-8460	Bracket — Belt Guide	1
9	49-8330	Pulley — Lower	1
10	36-8070	V-Belt	1
11	49-8340	Pulley — Upper	1
12	3296-29	Locknut	1
13	3256-2	Washer — Flat	1
14	12-3270	Screw — Special	1
15	32144-11	Screw — Thread Forming	1
16	46-5610	Clamp — Cable	1
17	32121-99	Pin — Coil	1
18	29-9560	Lever — Shift	1
19	29-9520	Yoke — Shift	1
20	29-9690	Washer	1
21	42-4740	Gear — 38T	1
22	36-4770	Spacer — Gear	3

Ref. No.	Part No.	Description	No. Used
23	29-9271	Gear — 42T	1
24	46-3560	Gear — 52T	1
25	55-8020	Retainer — Key	1
26	29-9330	Key — Shift	2
27	55-8010	Body — Sleeve	1
28	39-6720	Sleeve	1
29	29-9340	Collar — Shift	1
30	36-4780	Washer	1
31	32121-106	Pin — Coil	1
32	49-2040	Screw — Self Tapping	6
33	32121-100	Pin — Coil	1
34	29-9570	Bushing — Yoke	1
35	29-9410	Case — Lower	1
36	47-5220	Bushing — Output Shaft	2
37	44-0850	Shaft — Output	1
38	39-9680	Key — Rectangular	2
39	39-9650	Spring	2
40	47-2890	Bushing	2
41	302-56	Grease Fitting	2
42	49-7710	Pivot Arm Assembly — L.H. (Incl. Ref. #40, 41, 43 & 53)	1
43	48-2060	Bearing — Roller	2
44	49-7690	Washer — Thrust, Inner	2

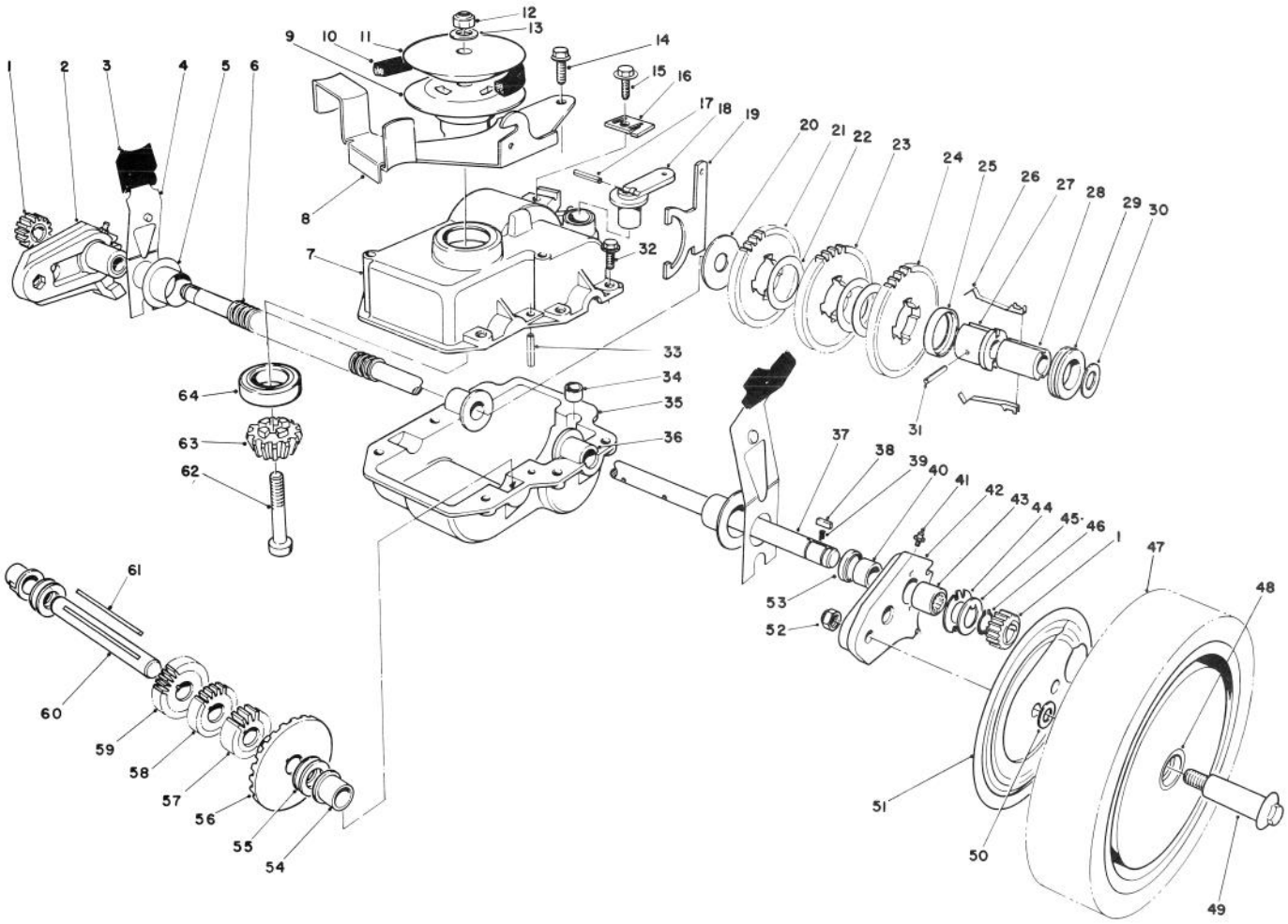

GEAR CASE ASSEMBLY (Continued)

Ref. No.	Part No.	Description	No. Used
45	49-7700	Washer — Thrust, Outer	2
46	32151-68	Retaining Ring	4
47	11-9519	Wheel, Tire & Gear Assembly (Incl. Ref. #48)	2
48	27-6250	Bushing — Wheel	4
49	27-6231	Bolt — Wheel	2
50	40-1940	Washer — Wheel Bolt	2
51	52-4860	Cover — Wheel	2
52	3296-6	Locknut	2
53	47-6730	Seal	2
54	52-5410	Bushing — Short Shaft	2

Ref. No.	Part No.	Description	No. Used
55	36-4791	Washer — Thrust	4
56	39-6670	Gear — Bevel	1
57	46-3540	Gear — 12T	1
58	46-3550	Gear — 14T	1
59	39-6650	Gear — 18T	1
60	46-9470	Shaft — Intermediate	1
61	39-7843	Key — Square	1
62	3274-61	Screw — Socket Hd.	1
63	49-8350	Pinion — Bevel	1
64	38-7820	Bearing — Ball	1
*	49-8610	Gear Case Complete	1

*Not Illustrated

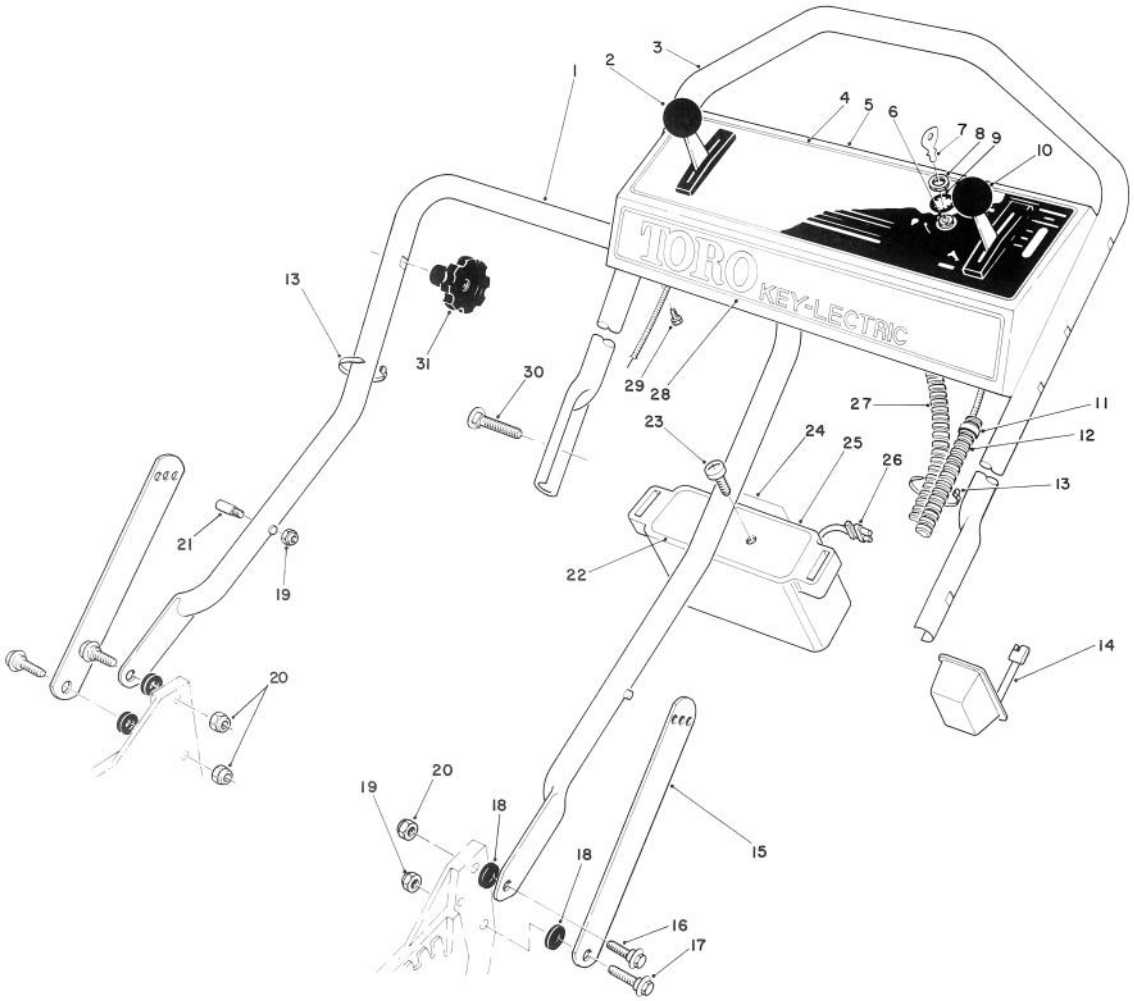

HANDLE ASSEMBLY

Ref. No.	Part No.	Description	No. Used
1	43-1360	Handle — Lower	1
2	46-5430	Control — Ground Speed Bend Type #1 Sheath Lg. 42¼ inch Wire Lg. 2¼ inch	1
3	46-5411	Handle — Upper	1
4	49-4060	Decal — Instruction Panel	1
5	11-6799	Panel — Control (Incl. Ref. #4)	1
6	46-5780	Switch — Starter (Incl. Ref. #7-9)	1
7	218-412	Keys (Set of 2)	1
8	218-461	Nut	1
9	3254-5	Lockwasher	1
10	46-6010	Control — Throttle Bend Type #1 Sheath Lg. 53½ inch Wire Lg. 2-1/16 inch	1
11	2412-50	Clip — Convoluted Tubing	4
12	46-6440	Cover — Control Cables	1
13	3290-378	Cable Tie	4

Ref. No.	Part No.	Description	No. Used
14	6-9780	Battery Charger	1
15	43-1370	Latch — Handle	2
16	27-7211	Screw — Shoulder	2
17	27-7210	Screw — Shoulder	2
18	3-3287	Spacer — Handle Latch	4
19	3296-47	Locknut	3
20	3296-29	Locknut	3
21†	49-2750	Pin — Handle	2
22	39-0630	Cover — Battery Case	1
23	32104-129	Screw — Self Tapping	2
24	36-5380	Decal	1
25	39-0640	Case — Battery	1
26	48-2070	Lead Wire Assembly	1
27	49-8310	Wire Harness Assembly	1
28	46-8460	Decal — Toro Key-Lectric	1
29	32104-76	Screw — Self Tapping	4
30	17-9421	Screw — Handle	2
31	19-4050	Knob — Handle Release	2
*	38-4180	Battery Pack Assembly (Incl. Ref. #22-26)	1

*Not Illustrated

†Service Replacement Parts

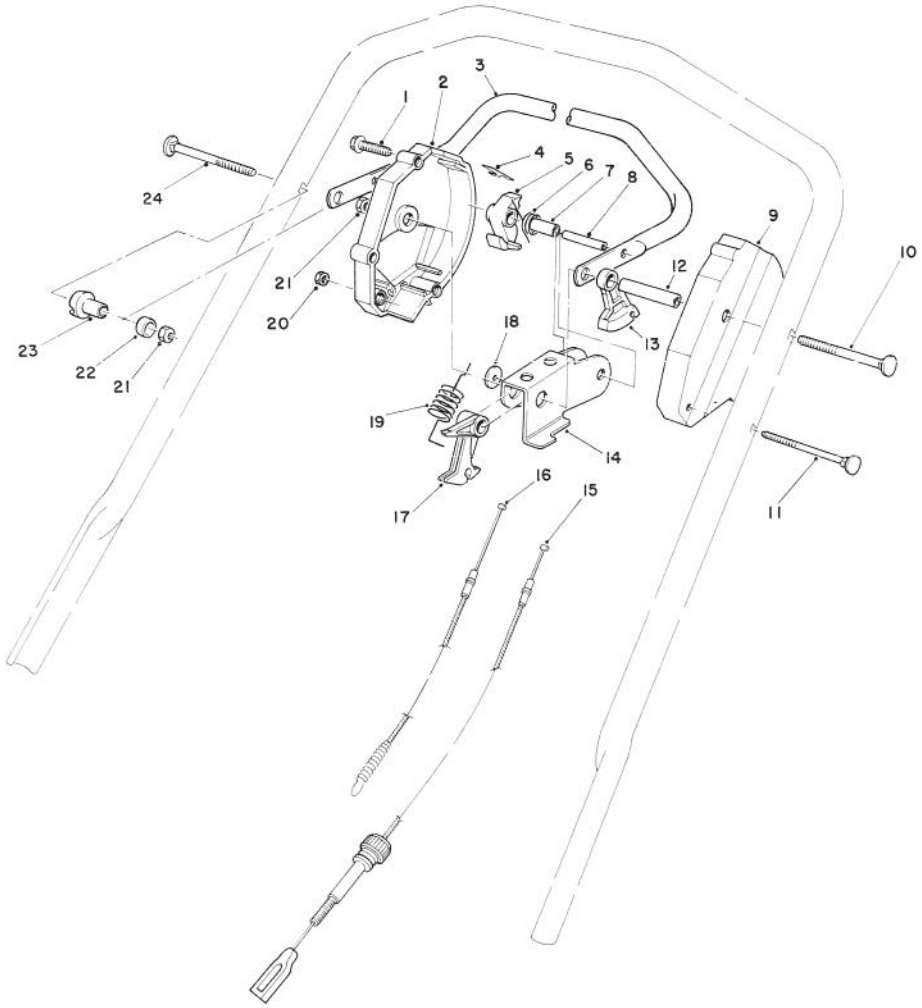

TRACTION CONTROL ASSEMBLY

Ref. No.	Part No.	Description	No. Used
1	46-7040	Screw — Thread Forming Hex Washer Hd.	3
2	46-5450	Housing — Control R.H.	1
3	52-7430	Control Bar Assembly	1
4	52-7410	Spring — Leaf	1
5	46-5530	Hook — Control	1
6	46-5510	Spring — Torsion	1
7	46-5550	Bushing — P.M.	1
8	32121-9	Pin — Coil	1
9	46-5460	Housing — Control L.H.	1
10	17-9422	Screw — Handle	1
11	46-6431	Screw — Handle	1
12	46-5590	Spacer	1

Ref. No.	Part No.	Description	No. Used
13	46-5520	Lever — Traction	1
14	46-5490	Rocker	1
15	46-5480	Cable — Traction	1
16	46-5470	Cable — Clutch	1
17	46-5540	Lever — Cable	1
18	46-5600	Washer — Nylon	1
19	49-8020	Spring — Extension	1
20	3296-42	Locknut	1
21	3296-58	Locknut	2
22	256-276	Spacer	1
23	49-1630	Support — Spacer	1
24	17-9421	Screw — Handle	1

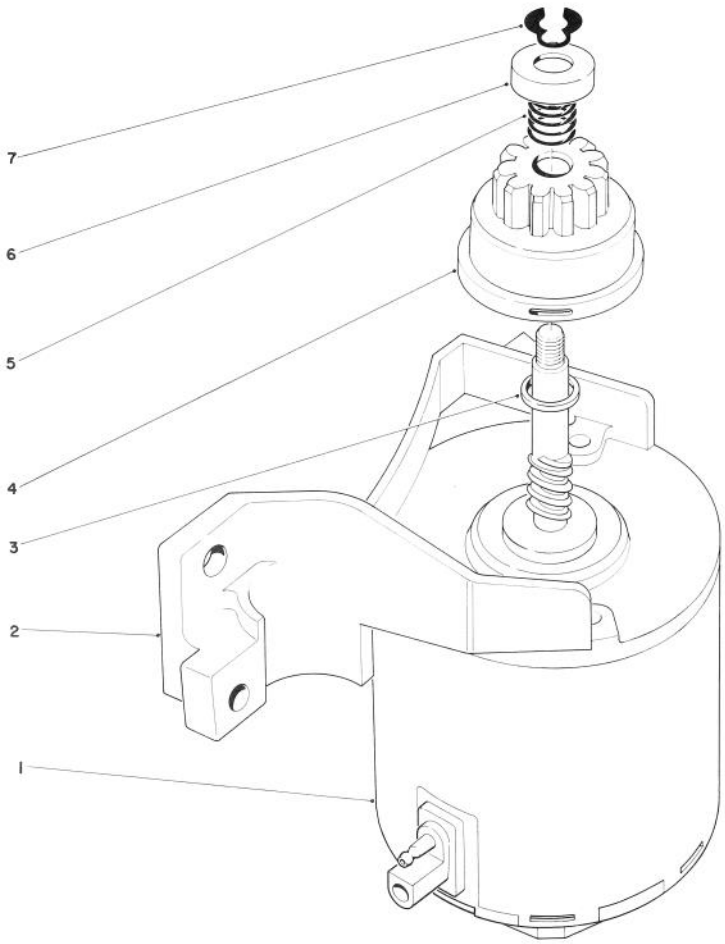

STARTER ASSEMBLY

Ref. No.	Part No.	Description	No. Used
1	218-543	End Frame w/Brushes & Electrical Terminal	1
2	218-541	End Frame w/Bushing	1
3	23-9591	Spacer	1
4	43-4370	Pinion Assembly	1

Ref. No.	Part No.	Description	No. Used
5	44-0500	Spring — Compression	1
6	49-2170	Pinion Stop	1
7	32151-47	Ring — Retaining Ext.	1
*	49-4210	Starter Motor (Incl. Ref. #1-7)	1

*Not Illustrated

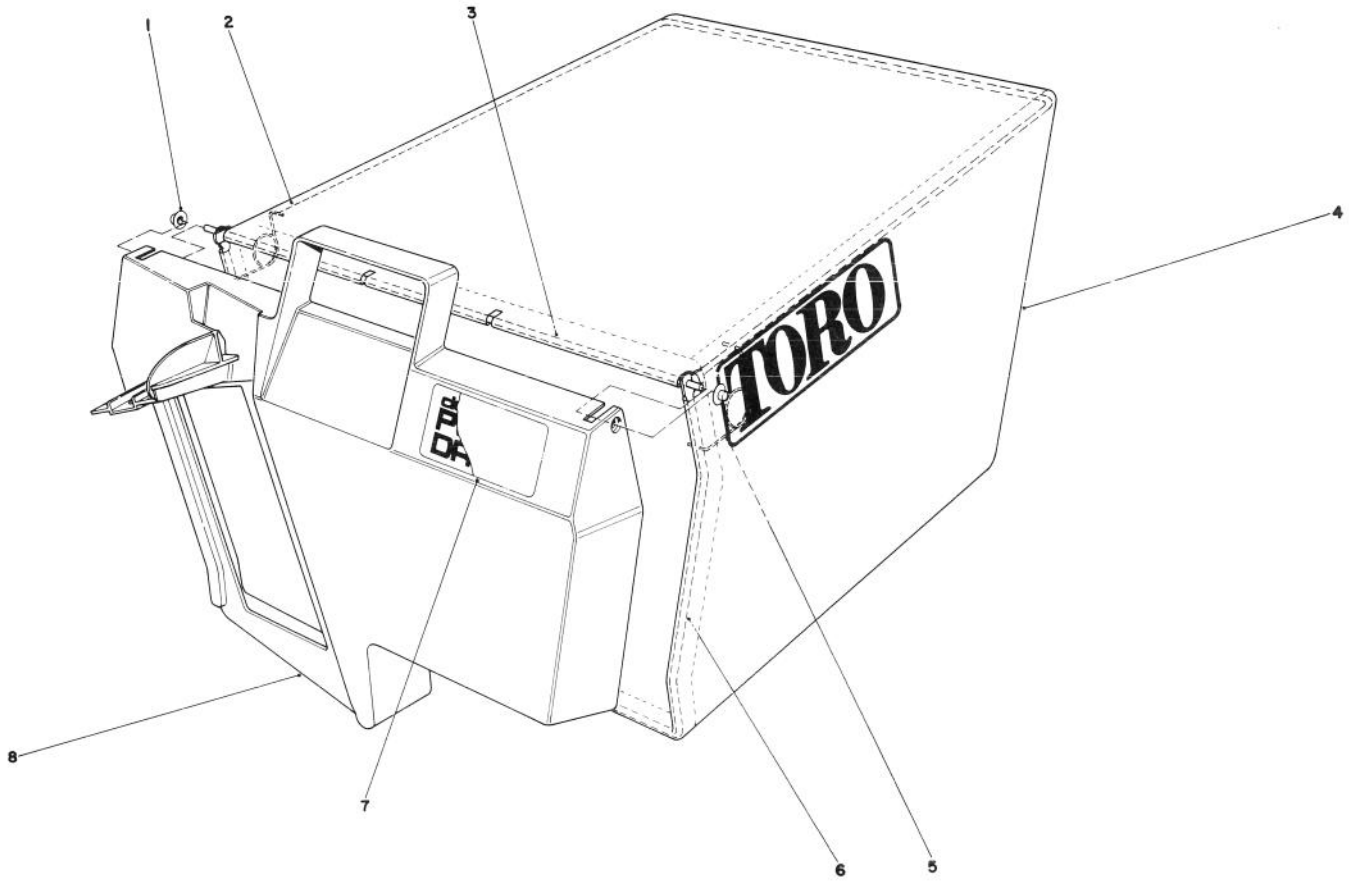

GRASS BAG ASSEMBLY NO. 11-0189

Ref. No.	Part No.	Description	No. Used
1	3290-422	Push Nut	2
2	42-4030	Bag Frame Upper	1
3	33-4820	Hinge Bag Door	1
4	8-2759	Grass Bag	1

Ref. No.	Part No.	Description	No. Used
5	36-6910	Spring	2
6	42-4020	Frame Bag	1
7	40-2240	Decal — Bag Door	1
8	37-1392	Door Grass Bag	1

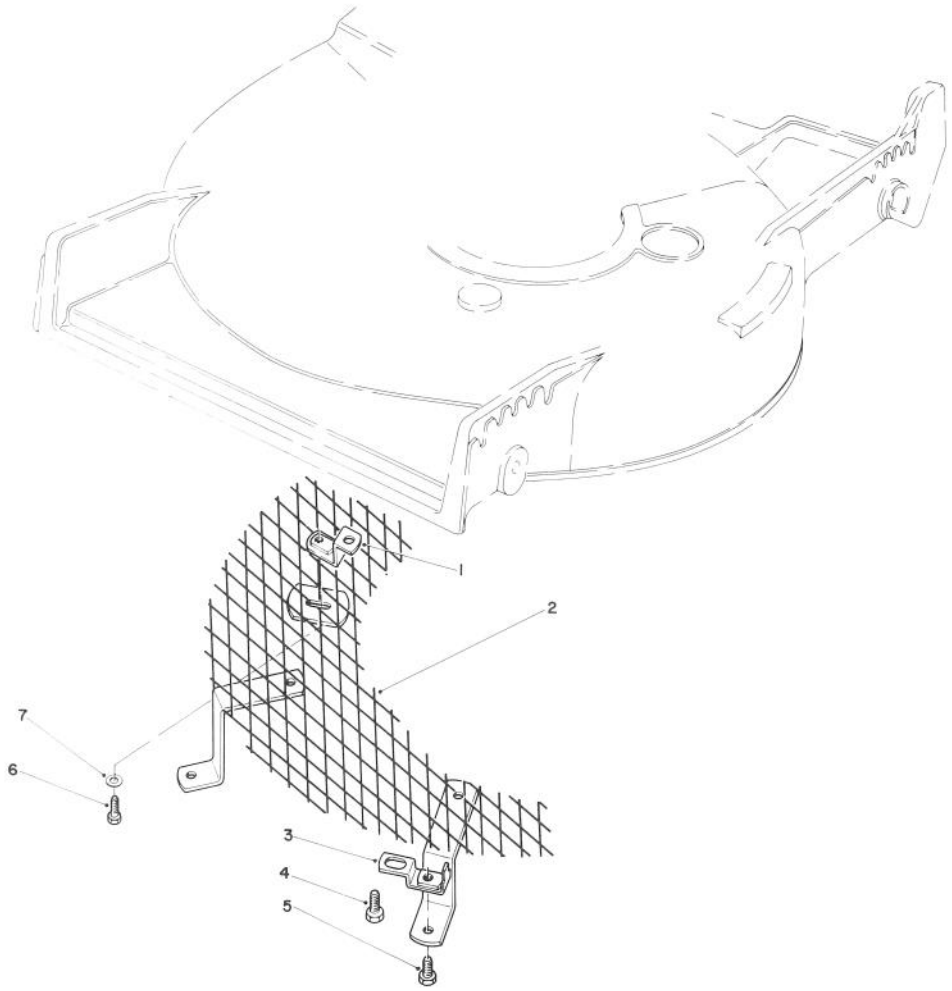

LEAF SHREDDER KIT MODEL NO. 59157 (Optional)

Ref. No.	Part No.	Description	No. Used
1	47-6260	Bracket	1
2	47-6230	Screen	1
3	46-4880	Mounting Bracket	2
4	32144-11	Screw — Self Tapping	3

Ref. No.	Part No.	Description	Ref. No.
5	321-3	Capscrew, Hex Hd.	2
6	321-5	Capscrew, Hex Hd.	1
7	3256-1	Washer	1

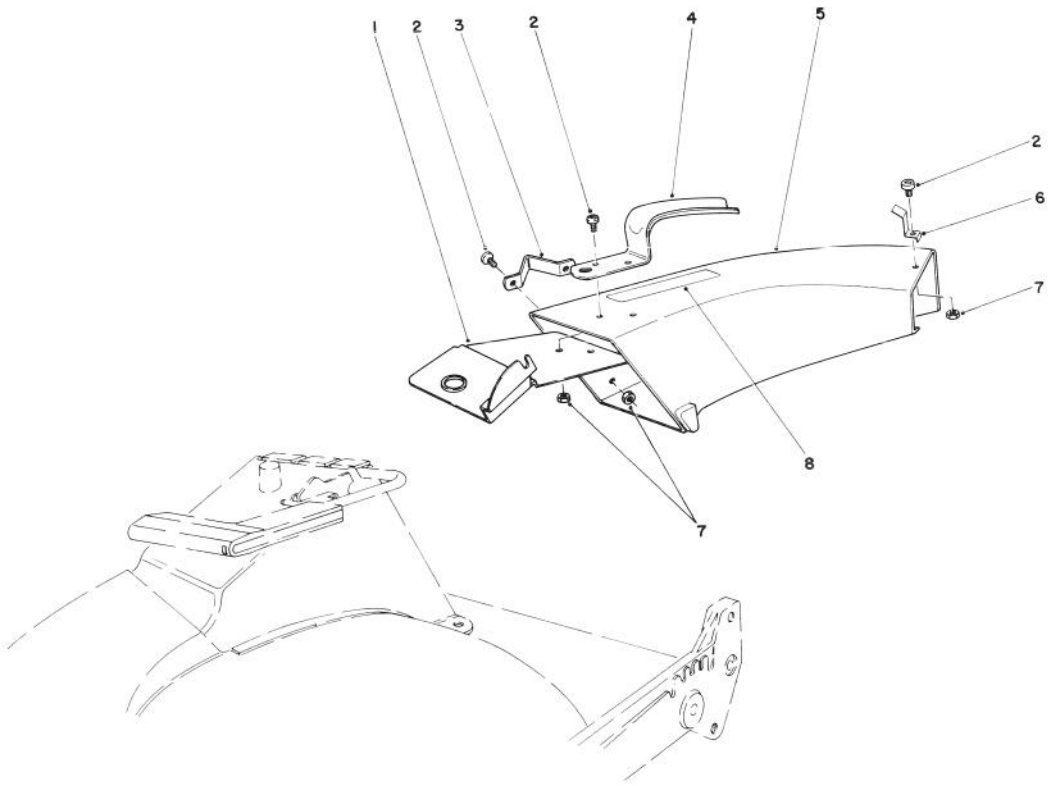

SIDE DISCHARGE CHUTE MODEL NO. 59108 (Optional)

Ref. No.	Part No.	Description	No. Used
1	44-2330	Plate — Discharge Chute	1
2	3251-3	Screw	5
3	46-6580	Bracket — Side	1
4	42-1340	Handle — Grass Chute	1
5	11-7149	Chute — Discharge (Incl. Ref. #8)	1

Ref. No.	Part No.	Description	No. Used
6	49-2630	Clip — Cable Stop	1
7	3296-12	Locknut	5
8	39-9120	Decal — Caution	1

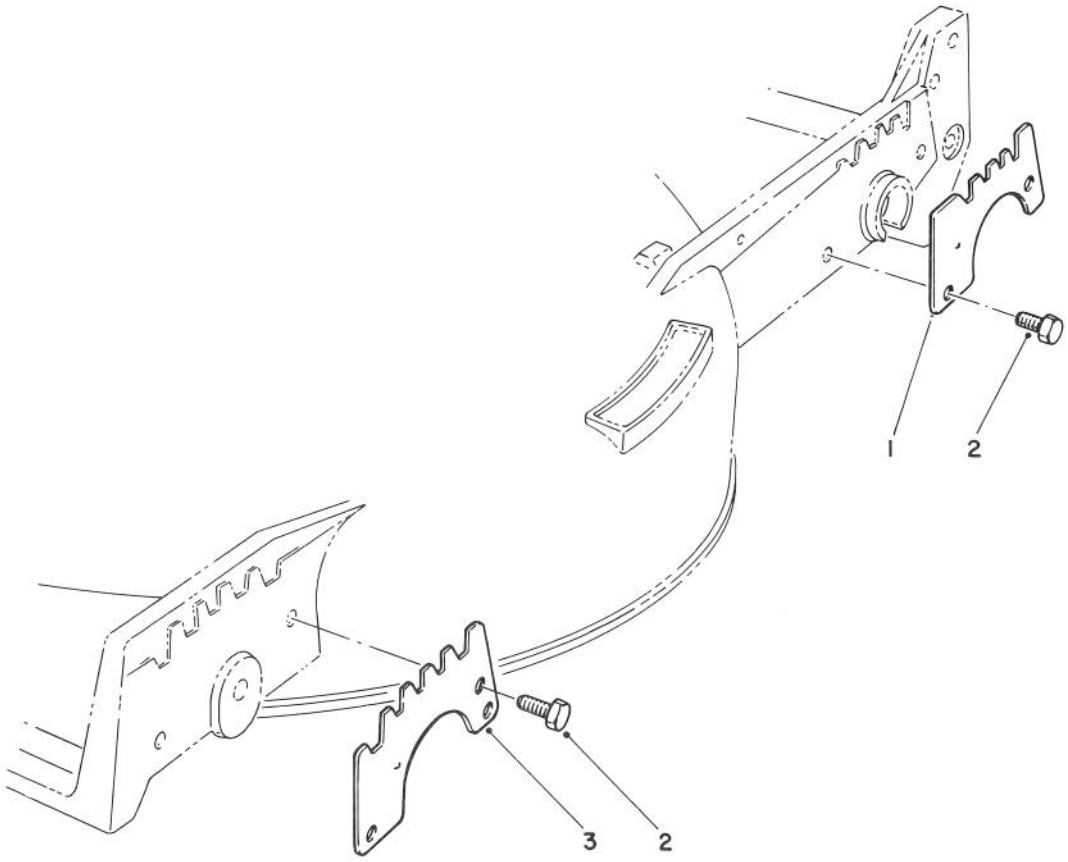

WEAR PLATE KIT NO. 49-4080 (Optional)

Ref. No.	Part No.	Description	No. Used
1	49-4070	Plate — Wear, Rear	2
2	32104-17	Screw — Thread Forming	8

Ref. No.	Part No.	Description	No. Used
3	43-5050	Plate — Wear, Front	2

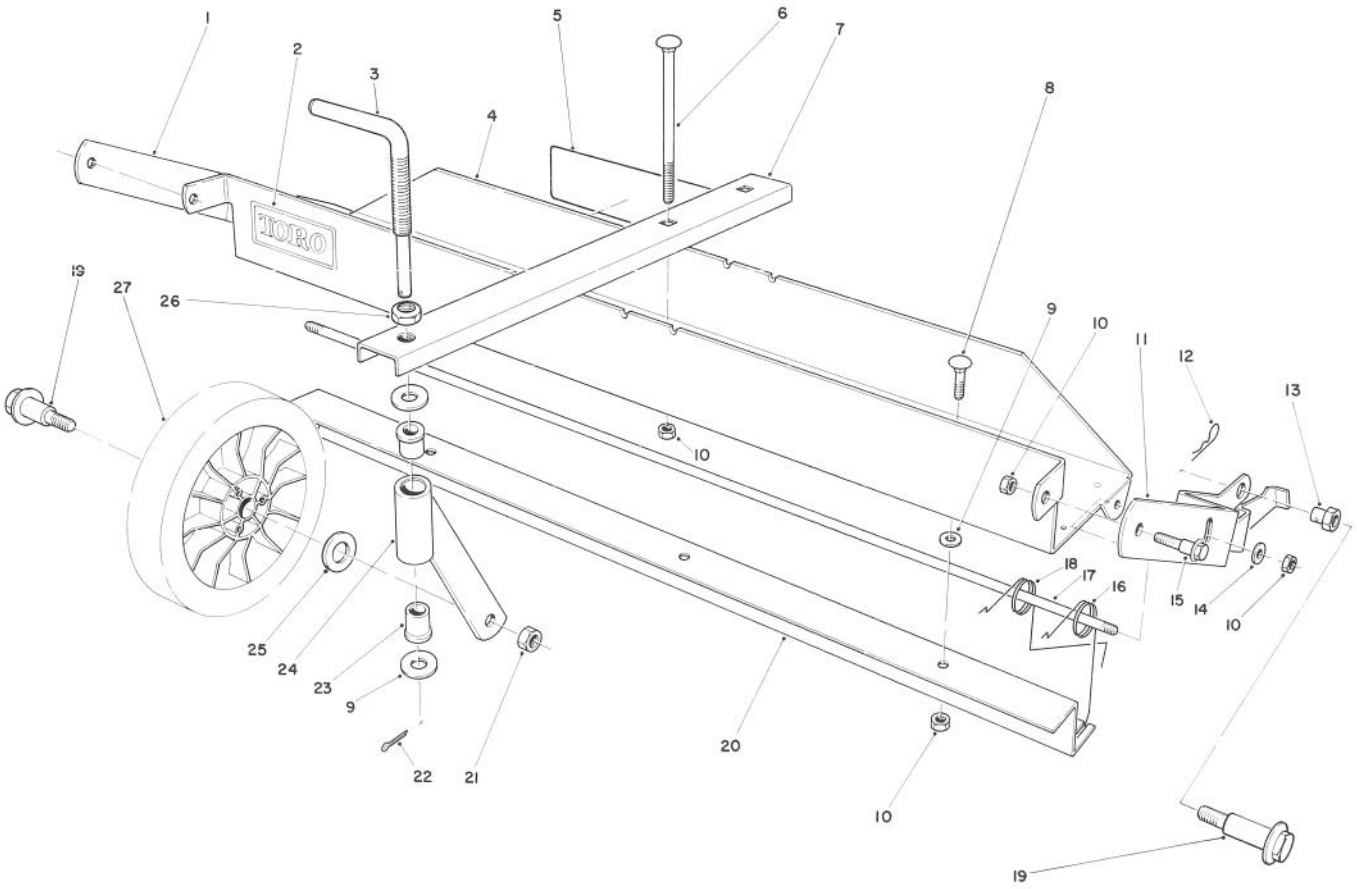

DETHATCHER KIT MODEL NO. 59126 (Optional)

Ref. No.	Part No.	Description	No. Used
1	47-6030	Frame Mount — R.H.	1
2	44-0810	Decal — Toro	1
3	47-6120	Rod — Castor Adjust	1
4	47-2390	Frame — Main (Incl. Ref. #2)	1
5	47-7500	Decal — Instruction	1
6	3230-13	Carriage Bolt	2
7	47-6090	Castor Frame	1
8	3230-1	Carriage Bolt	3
9	3256-23	Washer	5
10	32153-3	Locknut	9
11	47-6020	Frame Mount — L.H.	1
12	3290-255	Hairpin Cotter	2
13	47-6130	Pivot Nut	2
14	3256-24	Washer — Plain	2

Ref. No.	Part No.	Description	No. Used
15	37-8771	Screw — Shoulder	2
16	47-6040	Spring — Dethatcher	6
17	47-6050	Rod — Spring Support	1
18	47-6041	Spring — Dethatcher	6
19	27-6230	Wheel Bolt	3
20	47-6010	Strap — Spring Guide	1
21	3296-6	Locknut	1
22	3272-10	Cotter Pin	1
23	47-6110	Bushing — Flange	2
24	47-6060	Castor Tube & Support	1
25	40-1940	Washer — Wheel	1
26	3220-5	Nut — Jam	1
27	34-0380	Wheel Assembly	1
*	11-5239	Loose Parts	1

*Not Illustrated

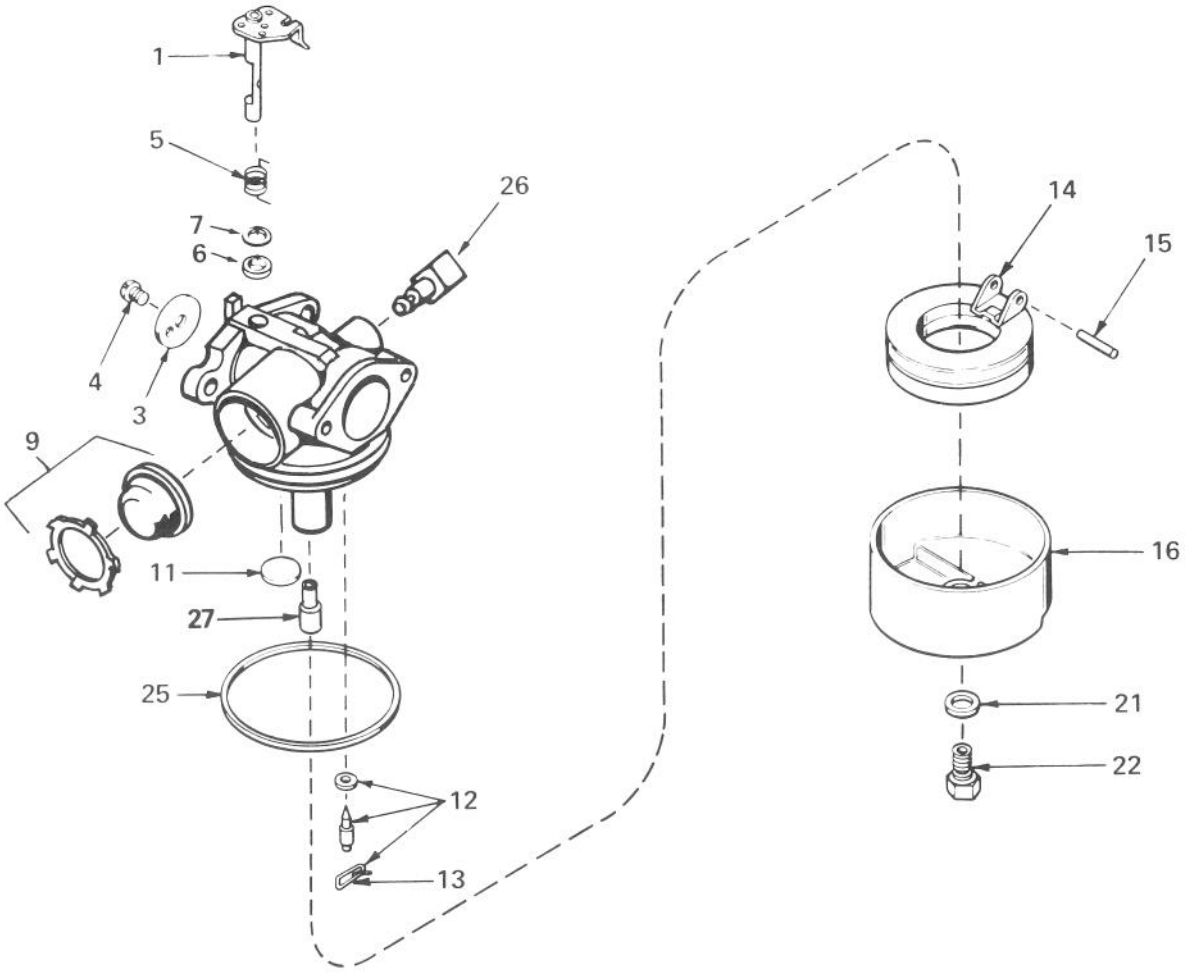

CARBURETOR NO. 632050A

Ref. No.	Part No.	Description	No. Used
1	631615	Shaft & Lever Assy., Throttle	1
3	631616	Shutter, Throttle	1
4	650506	Screw, Throttle Shutter	1
5	631767	Spring, Return	1
6	631971	Seal, Dust	1
7	631184	Washer, Flat	1
9	632047	Bulb & Retainer, Primer	1
11	631027	Plug, Welch	1
12	631021	Inlet Needle, Seat & Clip Assy. (Incl. #13)	1

Ref. No.	Part No.	Description	No. Used
13	631022	Clip, Inlet Needle	1
14	632019	Float, Carburetor	1
15	631024	Shaft, Float	1
16	631700	Bowl, Float	1
21	631334	Gasket, Bowl-to-body	1
22	631935	Nut, Float Bowl	1
25	631028	Gasket, Bowl-to-body	1
26	631807	Fitting, Fuel Inlet	1
27	632158	Spacer	1

ENGINE TECUMSEH MODEL NO. TNT 100-10095E

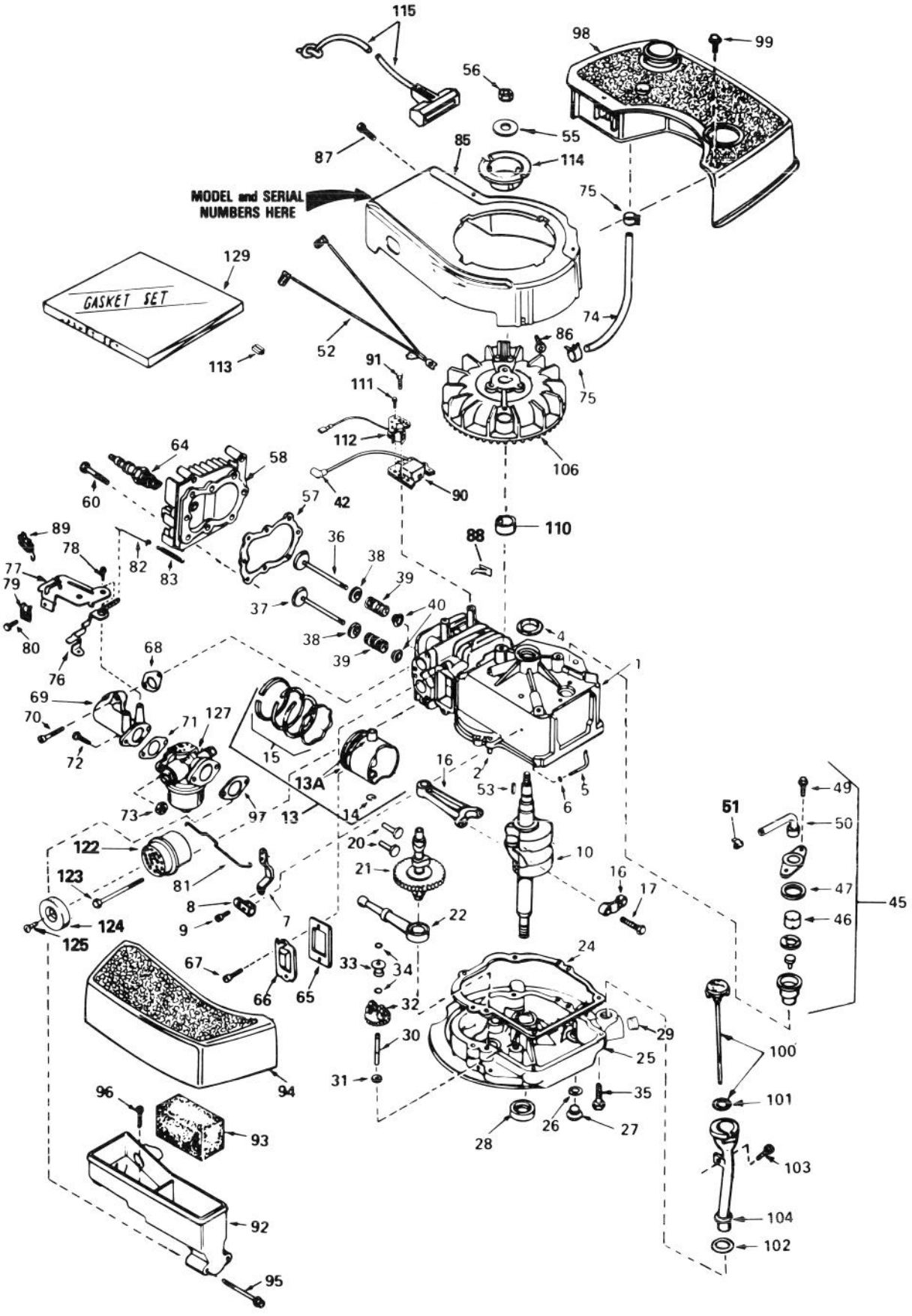

ENGINE TECUMSEH MODEL NO. TNT100-10095E

Ref. No.	Part No.	Description	No. Used
1	35010	Cylinder Assy. (Incl. #2 & 4)	1
2	26727	Pin, Dowel	2
4	32600	Seal, Oil	1
5	30589	Rod, Governor (Incl. #6)	1
6	28277	Washer, Flat	1
7	32651	Lever, Governor	1
8	31335	Clamp, Governor Lever	1
9	650548	Screw, Hex Washer Hd.,	1
10	34821	Crankshaft	1
13	34851	Piston, Pin & Ring Assy. (Std.) (Incl. #13A, 14 & 15)	1
13	34852	Piston, Pin & Ring assy. (.010 oversize) (Incl. #13A, 14 & 15)	1
13	34853	Piston, Pin & Ring Assy. (.020 oversize) (Incl. #13A, 14 & 15)	1
13A	32603B	Piston & Pin Assy. (Std.) (Incl. #14)	1
13A	32604B	Piston & Pin Assy. (.010 oversize) (Incl. #14)	1
13A	32605B	Piston & Pin Assy. (.020 oversize) (Incl. #14)	1
14	20381	Ring, Piston Pin Retaining	2
15	34854	Ring Set, Piston (Std.)	1
15	34855	Ring Set, Piston (.010 oversize)	1
15	34856	Ring Set, Piston (.020 oversize)	1
16	30963B	Rod Assy., Connecting (Incl. #17)	1
17	32610A	Bolt, Connecting Rod	2
20	27241	Lifter, Valve	2
21	33553	Camshaft (Mechanical Compression Release)	1
22	29914	Pump Assy., Oil	1
24	*26750A	Gasket, Mounting Flange	1
25	34831	Flange Assy., Mounting (Incl. # 26 thru 30)	1
26	*28833	Gasket, Oil Drain Plug	1
27	27244	Plug, Oil Drain	1
28	26208	Seal, Oil	1
29	9556	Plug, Pipe (Sq. Hd.)	1
30	30574	Shaft, Mechanical Governor	1
31	30590A	Washer, Flat	1
32	30591	Gear Assy., Governor (Incl.#31)	1
33	30588A	Spool, Governor	1
34	29193	Ring, Retaining	2
35	650488	Screw, Hex Hd.	6
36	29314B	Valve, Intake (Std.) (Incl. #40)	1
36	29315C	Valve, Intake (1/32" oversize) (Incl. #40)	1
37	29313C	Valve, Exhaust (Std.) (Incl. #40)	1
37	29315C	Valve, Exhaust (1/32" oversize) (Incl. #40)	1
38	31671	Cap, Upper Valve Spring	2
39	31672	Spring, Valve	2
40	31673	Cap, Lower Valve Spring	2
42	610118	Cover, Spark Plug	1
45	34214A	Breather Assy. (Incl. #46 thru 51)	1
46	33734	Element, Breather	1
47	*33735	Gasket, Breather	1
49	30200	Screw. Hex Washer Hd. Self-tap	2
50	33886	Tube, Breather	1
51	33887	Clip, Breather Tube	1
52	34231	Wire, Ground	1
53	611004	Key, Flywheel	1
55	650815	Washer, Belleville	1
56	650816	Nut, Flywheel	1
57	*33015	Gasket, Cylinder Head	1
58	34342	Head, Cylinder	1
60	6021A	Screw, Hex Flange Hd.,	8
64	35078	Plug, Spark (Autolite 458, Champion J-19LM or equiv.)	1
65	*27234	Gasket, Valve Spring Cover	1
66	32755	Cover, Valve Spring Box	1
67	650128	Screw, Fil. Hd.	2
68	*34690	Gasket, Intake Pipe	1
69	33004A	Pipe, Intake (Incl. #68)	1
70	650451	Screw, Hex Hd.	2
71	*31688	Gasket, Carburetor	1
72	6201	Screw, Hex Hd.,	2
73	29752	Nut & Lockwasher Assy.,	2
74	30705	Line, Fuel	1
75	26460	Clamp, Fuel Line	2
76	34310	Lever, Control	1
77	33889A	Control Assy., Speed (Incl. #76, 78 & 89)	1
78	650804	Screw, Hex Washer Hd. Shoulder, Self-tap,	1
79	27793	Clip, Conduit	1
80	28942	Screw, Hex Washer Hd.	1
81	34336	Link, Governor-to-throttle	1
82	33151	Link, Governor Spring	1
83	33890	Spring, Governor	1
85	33907A	Housing, Blower	1
86	650561	Screw, Hex Washer Hd. Durlok	2
87	30200	Screw, Hex Washer Hd. Self-tap	2
88	29443	Clip, Spring	1
89	610973	Terminal Assy.	1
90	34443A	Lamination & Coil Assy. (Solid State)	1
91	650814	Screw, Hex Hd.	2
92	33895	Body, Air Cleaner	1
93	33896	Filter, Air Cleaner	1
94	33897	Cover, Air Cleaner	1
95	650762	Screw, Fil. Hd.	2
96	650804	Screw, Hex Washer Hd. Shoulder, Self-tap	1
97	*33051	Gasket, Air Cleaner	1
98	33904B	Tank, Fuel	1
99	28763	Screw, Hex Washer Hd. Shakeproof,	2
100	33894A	Dipstick, Oil (Incl. #101)	1
101	33590	"O" Ring, Dipstick	1
102	34265	Gasket, Fill tube	1
103	650562	Screw, Hex Washer Hd. Shakeproof,	1
104	34380	Tube, Oil Fill	1
106	611050	Flywheel	1
110	34080	Spacer, Flywheel Key	1
111	650767	Screw, Hex Hd.	1
112	34990	Alternator Coil Assy.	1
113	610885	Connector, Body	1
114	34461	Hub, Starter	1
115	590343	Rope Assy., Starter	1
122	27181B	Muffler (Incl. #123)	1
123	650795	Screw, Hex Hd.,	2
124	32431	Cover, Muffler	1
125	650643	Screw, Pan Hd. Self-tap,	1
127	632050A	Carburetor (Incl. #71)	1
129	33906A	Gasket Set	1

*Indicates parts included in Gasket Set, Ref. #129.

PRODUCT CHANGES

In an effort to make improvements available to TORO owners as quickly as possible, minor changes are incorporated into Toro's products from time to time that do not become immediately shown in the Parts Catalog. If such a change apparently has been made in your unit, which is not reflected in your manual, see your TORO Distributor or his Authorized TORO Service Dealer for information and part numbers.

IDENTIFICATION AND ORDERING

MODEL AND SERIAL NUMBERS

The Mower has two identification numbers: a model number and a serial number. The two numbers are stamped on a decal which is located on the mower housing between the rear wheels. In any correspondence concerning the mower, supply model and serial numbers to assure that correct information and replacement parts are obtained.

To order replacement parts from an Authorized TORO Service Dealer, supply the following information:

1. Model and serial numbers of the mower.
2. Part number, description, and quantity of part(s) desired.

Note: Do not order by reference number if a parts catalog is being used; use the PART NUMBER.

The Toro Promise

A Two Year Limited Warranty
On All Gasoline Powered Consumer Products

The Toro Company promises to repair your TORO Product if defective in materials or workmanship. The following time periods from the date of purchase apply:

Residential Product ..... 2 Years
Residential Products Used Commercially ..... 45 Days

The costs of parts and labor are included, but the customer pays the transportation costs. Just return any residential product to an Authorized TORO Service Dealer or TORO Distributor.

Should you feel your TORO Product is defective and wish to rely on The Toro Promise, the following procedure is recommended:

1. Contact any Authorized TORO Service Dealer, TORO Master Service Dealer, or TORO Distributor (the Yellow Pages of your telephone directory is a good reference source).
2. He will either instruct you to return the product to him or recommend another Authorized TORO Service outlet which might be more convenient.
3. Bring the product along with your original sales slip, or other evidence of purchase date, to the service dealer.
4. The servicing dealer will inspect the unit, advise you whether the product is defective and, if so, make all repairs necessary to correct the defect without extra charge to you.

If for any reason you are dissatisfied with the dealer's analysis of the defect or the service performed, you may contact us.

Write:

TORO Consumer Service Department
8111 Lyndale Avenue South
Minneapolis, Minnesota 55420

The above remedy of product defects through repair by an Authorized TORO Service Dealer is the purchaser's sole remedy for any defect.

THERE IS NO OTHER EXPRESS WARRANTY. ALL IMPLIED WARRANTIES OF MERCHANTABILITY AND FITNESS FOR USE ARE LIMITED TO THE DURATION OF THE EXPRESS WARRANTY.

Some states do not allow limitations on how long an implied warranty lasts, so the above limitation may not apply to you.

This warranty applies only to parts or components which are defective and does not cover repairs necessary due to normal wear, misuse, accidents, or lack of proper maintenance. Regular, routine maintenance of the unit to keep it in proper operating condition is the responsibility of the owner.

All warranty repairs reimbursable under The Toro Promise must be performed by an Authorized TORO Service Dealer using Toro approved replacement parts.

Repairs or attemped repairs by anyone other than an Authorized TORO Service Account are not reimbursable under The Toro Promise. In addition, these unauthorized repair attempts may result in additional malfunctions, the correction of which is not covered by warranty.

THE TORO COMPANY IS NOT LIABLE FOR INDIRECT, INCIDENTAL OR CONSEQUENTIAL DAMAGES IN CONNECTION WITH THE USE OF THE PRODUCT INCLUDING ANY COST OR EXPENSE OF PROVIDING SUBSTITUTE EQUIPMENT OR SERVICE DURING PERIODS OF MALFUNCTION OR NON-USE.

Some states do not allow the exclusion or limitation of incidental or consequential damages, so the above limitation or exclusion may not apply to you.

This warranty gives you specific legal rights, and you may also have other rights which vary from state to state.

COUNTRIES OTHER THAN THE UNITED STATES OR CANADA

Customers who have purchased TORO products exported from the United States or Canada should contact their TORO Distributor (Dealer) to obtain guarantee policies for your country, province or state. If for any reason you are dissatisfied with your Distributor's service or have difficulty obtaining guarantee information, contact the TORO importer. If all other remedies fail, you may contact us at The Toro Company.

Compliance with Radio Interference Regulations Certified.
Certifie Conforme au Reglement sur le Brouillage Radioelectrique.

Litho in U.S.A.

MAINTENANCE RECORD

Date	Hours Used	Oil Change	Air Cleaner Service	Lubrication	Winter Storage	Spring Service	Spark Plug Gap

MAINTENANCE RECORD

Date	Hours Used	Oil Change	Air Cleaner Service	Lubrication	Winter Storage	Spring Service	Spark Plug Gap