Form No. 3328-211 Rev A

TORO®

Count on it.

Parts Catalog

Leak Detector Kit

Greensmaster® 3200 Series

Model No. 04497

Register at www.Toro.com.
Original Instructions (EN)

3328-211 A

Leak Detector Kit Assembly

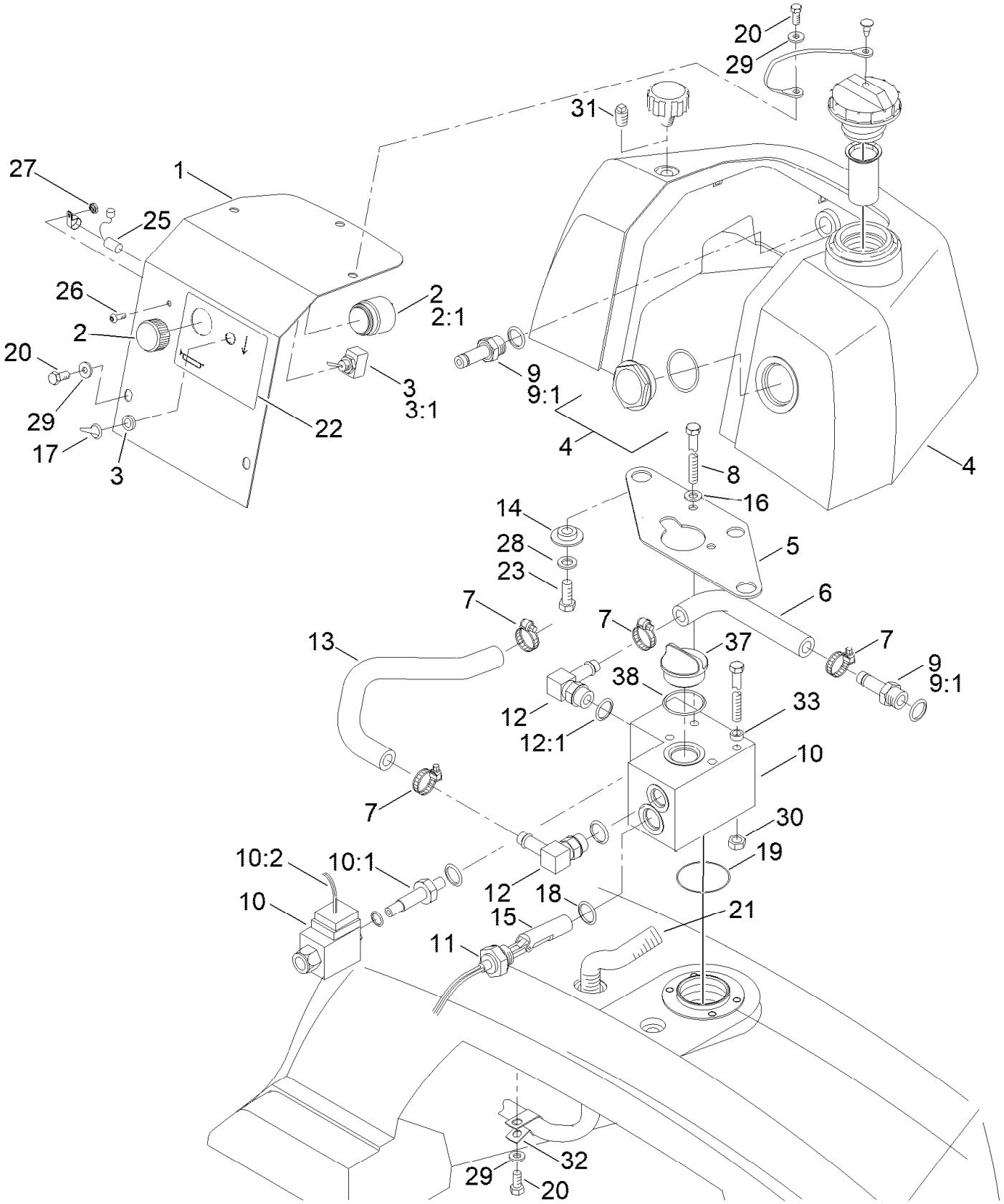

Leak Detector Kit Assembly (continued)

Ref.	Part Number	Qty.	Description
1	98-0638-03	1	Plate-Cover
2	80-9330	1	Audio Alarm ASM
2:1	104-5107	1	Nut-Plastic, Knurled
3	20-7150	1	Switch
3:1	218-497	1	Facenut-Beveled
4	98-0637	1	Tank-Leak Detector
5	94-8165-03	1	Plate-Mounting
6	98-0639	1	Hose-Formed, Outlet
7	2412-36	4	Clamp-Hose
8	33114-090	4	Screw-HH
9	354-121	2	Fitting-STR
9:1	237-79	1	O-Ring
10	163-8797	1	Kit-Valve, Leak Detector
10:1	147-3133	1	Valve ASM
10:2	122-4393	1	Harness-Jumper, Valve Adapter
11	83-1450	1	Sensor-Level, Oil
12	354-120	2	Fitting-Elbow, 90
12:1	237-79	1	O-Ring
13	98-0640	1	Hose-Formed, Inlet
14	240-11	2	Bushing-Flange
15	122-4393	1	Harness-Jumper, Valve Adapter
16	3256-23	2	Washer-Plain
17	218-473	1	Boot-Switch
18	237-80	1	O-Ring
19	94-9649	1	O-Ring
20	42-9430	6	Screw-HH
21	94-1350	1	Harness-Leak Detector
22	93-2436	1	Decal-Leak Detector
23	33115-025	2	Screw-HH
25	83-2280	1	Timer-Delay
26	3274-39	1	Screw-HSBH
27	3296-12	1	Nut-Lock, NI
28	93-4637	2	Washer-Flat
29	3256-1	6	Washer-Flat
30	33024-00	4	Nut-Lock, NI
31	281-10	1	Plug
32	2412-41	1	Clamp-R
33	73-3540	2	Washer-Idler
37	93-7498	1	Plug-Plastic
38	94-8166	1	O-Ring