Form No. 3480-794 Rev A

Proline™ AMI Commercial Walk-Behind Mower

Model No. 44460BOT—Serial No. 400000000 and Up

Setup Instructions

Setup

Loose Parts

Use the chart below to verify that all parts have been shipped.

Procedure	Description	Qty.	Use
1	No parts required	–	Check the tire pressure.
2	No parts required	–	Service the battery.
3	No parts required	–	Change the transmission fluid (reminder only).
4	No parts required	–	Check the engine-oil level.
5	No parts required	–	Fill out the online warranty registration form and place the keys into the literature pack.

1

Checking the Tire Pressure

No Parts Required

Procedure

1. Check the tire pressure in the drive tires. Proper inflation for drive tires is 83 to 97 kPa (12 to 14 psi).
2. Adjust the tire pressure within the 83 to 97 kPa (12 to 14 psi) range to make the tire circumferences match as closely as possible.

Note: The front caster tires are semi-pneumatic. No adjustment is necessary.

2

Servicing the Battery

No Parts Required

Procedure

WARNING

CALIFORNIA
Proposition 65 Warning

Battery posts, terminals, and related accessories contain lead and lead compounds, chemicals known to the State of California to cause cancer and reproductive harm. Wash hands after handling.

Important: **The machine is shipped with a sealed AGM lead acid battery.**

© 2026—The Toro® Company
8111 Lyndale Avenue South
Bloomington, MN 55420

Register at www.Toro.com.

Original Instructions (EN)
Printed in the USA.
All Rights Reserved

3480-794

⚠ DANGER

Charging or jump-starting the battery may produce explosive gases. Battery gases can explode, causing serious injury.

- **Keep sparks, flames, or cigarettes away from the battery.**
- **Ventilate when charging or using the battery in an enclosed space.**
- **Make sure that the battery venting path is always open once the battery is filled with acid.**
- **Always shield your eyes and face from battery.**

⚠ DANGER

Battery electrolyte contains sulfuric acid, which is poisonous and can cause severe burns. Swallowing electrolyte can be fatal or can cause severe burns if it touches skin.

- **Wear safety glasses to shield eyes, and wear rubber gloves to protect your skin and clothing when handling electrolyte.**
- **Do not swallow electrolyte.**
- **In the event of an accident, flush with water and call a doctor immediately.**

⚠ CAUTION

If the ignition is in the ON position, there is potential for sparks and engagement of components. Sparks could cause an explosion, or moving parts could accidentally engage and cause personal injury.

Ensure that the ignition switch is in the OFF position before charging the battery.

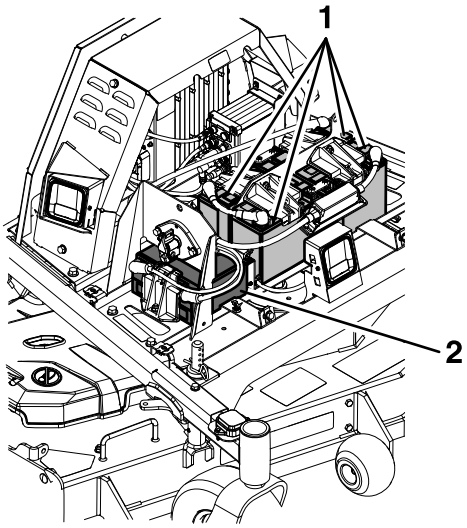

g523894

Figure 1

Battery location

1. 48 V System (Four batteries)
2. 12 V System (One battery)

- **12 V System**

  The battery voltage will be displayed on the message display if the ignition key is turned to the ON position for a few seconds. You can also use a digital voltmeter with the key in the ON position and the engine turned off. Charge the battery to bring it up to a charge of 12.1 V or greater.

- **48 V System**

  With the engine turned off and the key in the ON position, check each battery individually with a digital voltmeter. Charge each battery individually to bring it up to a charge of 12.1 V or greater. All four batteries need to be charged to a minimum of 12.1 V, and need to be within 0.3 V of each other. If any of the batteries in the pack cannot meet these requirements, all four batteries must be replaced at the same time.

Important: **When replacing the 48 V battery pack, use 4 identical Toro batteries (Part No. 142-7345). Charge each battery individually to a minimum of 12.1 V and ensure each battery is within 0.3 V of each other before installing. Failure to do so will reduce the life of the battery pack.**

Important: **In order to prevent damage to the battery, use an automatic 12 V smart charger approved for use with AGM type batteries with an output of 3.5 A or less. Make sure the negative battery cable is disconnected before charging and that the charger is set to the correct mode for 12 V AGM batteries.**

3

Changing the Transmission Fluid (Reminder Only)

No Parts Required

Procedure

Important: **This machine requires the transmission fluid to be changed after the first 50 hours and every 500 hours thereafter.**

Fluid type: Toro Synthetic HV Electric Motor Drive Oil

Capacity: 150 ml (5 fl oz)

1. Park the machine on a level surface, disengage the PTO, and move the motion-control levers outward to the PARK position.
2. Shut off the machine, remove the key, and wait for all moving parts to stop before leaving the operating position.
3. Remove the tire.

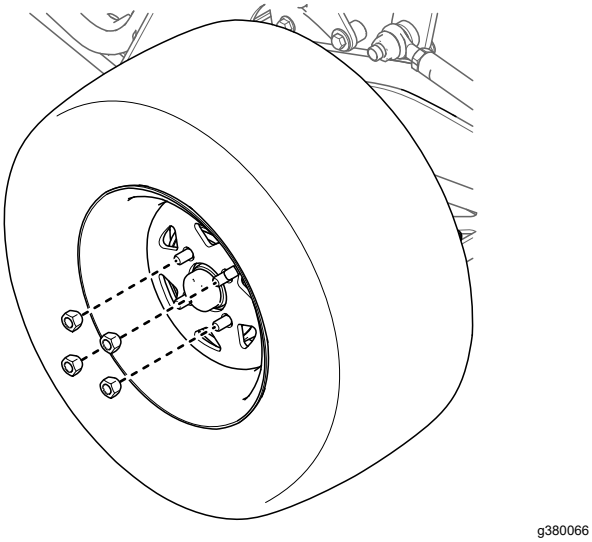

g380066

Figure 2

4. Place a drain pan under the transmission.
5. Remove the top plug and bottom plug. Allow the fluid to drain.

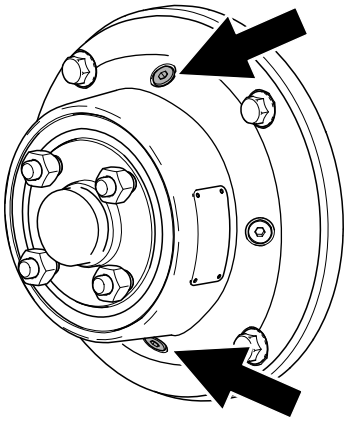

g380054

Figure 3

6. Install the bottom plug and torque it to 7 to 8 N·m (62 to 70 in-lb).
7. Remove a side plug.
8. Add fluid, as specified at the beginning of this procedure, through the top hole until the level reaches the side plug opening.

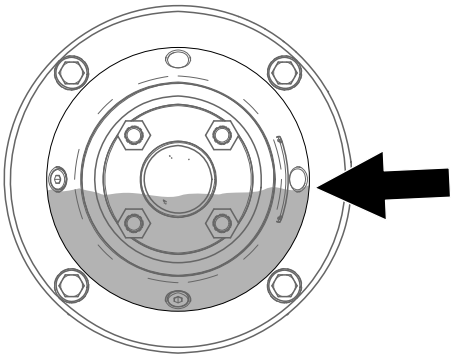

g380053

Figure 4

9. Install the top plug and side plug. Torque them to 7 to 8 N·m (62 to 70 in-lb).
10. Install the tire and torque the lug nuts to 108 to 122 N·m (80 to 90 ft-lb).
11. Repeat for the other transmission.

4

Checking the Engine-Oil Level

No Parts Required

Procedure

Before you start the engine and use the machine, check the oil level in the engine crankcase; refer to the *Operator's Manual*.

5

Filling Out the Product Registration

No Parts Required

Procedure

Fill out the online warranty registration form and place the keys into the literature pack.