Form No. 3351-421

5th Wheel Hitch Kit

for Heavy-Duty Workman® Vehicles

Model No. 44230—Serial No. 200000001 and Up

Operator's Manual

Contents

	Page
Introduction	2
Safety	3
Safe Operating Practices	3
Safety and Instruction Decals	4
Specifications	5
Set Up Instructions	5
Installing the Electric Brake Controller	5
Install Rear Stabilizer	7
Install 1/3 Area Attachment or Shield	7
Install the 5th Wheel Hitch Plate	7
Install Male Quick Coupler-Cushman Implements	9
5th Wheel Tongues - Cushman Implements	9
Operating Instructions	9
Connecting the 5th Wheel Implement to the Workman	9
Using the Electric Brakes	11
Towing the 5th Wheel Implement	11
Maintenance	12
Seasonal Storage	12
Hydraulic Schematics	13
Electrical Schematic	15
Brake Controller	15
The Toro General Commercial Products Warranty	16

Introduction

Read this manual carefully to learn how to operate and maintain your product properly. The information in this manual can help you and others avoid injury and product damage. Although Toro designs and produces safe products, you are responsible for operating the product properly and safely.

Whenever you need service, genuine Toro parts, or additional information, contact an Authorized Distributor and have the model and serial numbers of your product ready. Figure 1 illustrates the location of the model and serial numbers on the product.

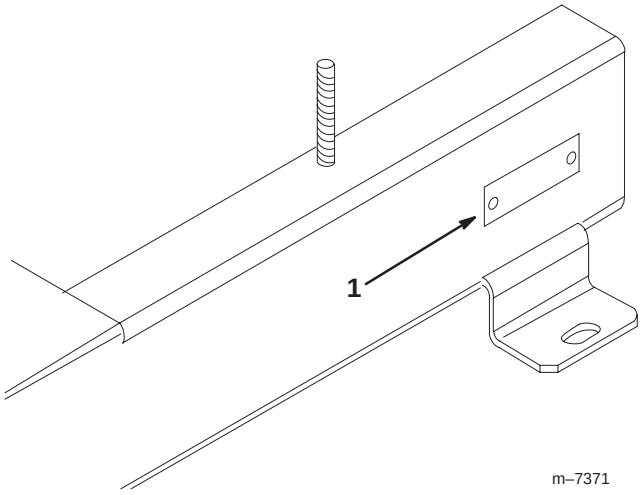

Figure 1

1. Location of the model and serial numbers

Write the product model and serial numbers in the space below:

Model No. _____

Serial No. _____

This manual identifies potential hazards and has special safety messages that help you and others avoid personal injury and even death. ***Danger***, ***Warning***, and ***Caution*** are signal words used to identify the level of hazard. However, regardless of the hazard, be extremely careful.

Danger signals an extreme hazard that *will* cause serious injury or death if you do not follow the recommended precautions.

Warning signals a hazard that *may* cause serious injury or death if you do not follow the recommended precautions.

Caution signals a hazard that may cause minor or moderate injury if you do not follow the recommended precautions.

This manual uses two other words to highlight information. **Important** calls attention to special mechanical information and **Note:** emphasizes general information worthy of special attention.

© 2004 by The Toro Company

8111 Lyndale Avenue South
Bloomington, MN 55420-1196

Contact us at www.Toro.com
All Rights Reserved
Printed in the USA

Safety

This machine meets or exceeds the B71.1–1998 specifications of the American National Standards Institute, in effect at the time of production. However, improper use or maintenance by the operator or owner can result in injury. To reduce the potential for injury, comply with these safety instructions and always pay attention to the safety alert ⚠ symbol, which means CAUTION, WARNING, or DANGER—"personal safety instruction." Failure to comply with the instruction may result in personal injury or death.

Safe Operating Practices

The following instructions are from ANSI standard B71.1—1998.

This product is capable of amputating hands and feet and throwing objects. Always follow all safety instructions to avoid serious injury or death.

Before Operating

Read and understand all operating and safety instructions. Before operating this unit, become familiar with all controls and know how to stop quickly. A replacement manual is available by sending complete Model and Serial Number to:

The Toro Company
8111 Lyndale Avenue South
Minneapolis, MN 55420

Safe operation begins before taking the vehicle out for a day's work. Read and understand the operating instructions for the Toro Workman, 5th wheel hitch kit, and 5th wheel implement before using the equipment. Allow only trained operators to use the vehicle.

Before each use, be sure all bolts and nuts are tight. Always make sure 5th wheel mounting pins and fasteners are in place and secure.

Do not modify this equipment in any manner.

Keep all shields, safety devices and decals in place. If a shield, safety device or decal is malfunctioning, illegible or damaged, repair or replace before operating the machine. The front 1/3 area of the Workman cargo zone must be covered by a 1/3 attachment or shield when using the 5th wheel hitch kit.

Make sure all hydraulic fittings are tight and all hydraulic hoses are in good condition before operating this unit.

Read and understand all operating, safety and maintenance procedures for the 5th wheel implement.

While Operating

Using the machine demands attention. Failure to operate vehicle safely may result in an accident, tip over of vehicle, serious injury or death. Drive carefully. To prevent tipping or loss of control:

- Use extreme caution, reduce speed and maintain a safe distance around sand traps, ditches, creeks, ramps, any unfamiliar areas or other hazards.
- Watch for holes or other hidden hazards.
- Use caution when operating vehicle on a steep slope. Normally travel straight up and down slopes. Reduce speed when making sharp turns or when turning on hillsides. Avoid turning on hillsides whenever possible.
- Use extra caution when operating vehicle on wet surfaces, at higher speeds or with a full load. Stopping time will increase with a full load. Shift into a lower gear before starting up or down a hill.
- Avoid sudden stops and starts. Do not go from reverse to forward or forward to reverse without coming to a complete stop.
- Do not attempt sharp turns or abrupt maneuvers or other unsafe driving actions that may cause a loss of vehicle control.
- Before backing up, look to the rear and assure no one is behind. Back up slowly.
- If ever unsure about safe operation, STOP WORK and ask your supervisor.
- Make sure the electric brakes of the 5th wheel implement are operating properly. Adjust or repair as needed. NEVER operate a 5th wheel implement without properly functioning brakes.
- Insure rear stabilizer is installed before operating with a 5th wheel implement.
- Assure 5th wheel implement clears Workman vehicle during sharp turns. Route hydraulic hoses and cables to prevent disconnection during turns.
- NEVER exceed maximum rated capacity of the 5th wheel implement. The maximum rated capacity of the Workman 5th wheel hitch is 4000 lb. implement.
- The Workman 5th wheel kit has a 2 inch ball. Use 5th wheel implements that have a tongue set up to accept a 2 inch ball.

Maintenance

Before servicing or making adjustments to the 5th wheel hitch, 5th wheel implement or Workman, stop engine of Workman, set parking brake and remove key from engine to prevent accidental starting of the engine.

Make sure all hydraulic line connectors are tight and all hydraulic hoses and lines are in good condition before applying pressure to the system.

Keep body and hands away from pin hole leaks or nozzles that eject hydraulic fluid under pressure. Use paper or cardboard, not hands to search for leaks. Hydraulic fluid escaping under pressure can have sufficient force to penetrate skin and do serious damage. If fluid is injected into skin it must be surgically removed within a few hours by a doctor familiar with this form of injury or gangrene may result.

If the engine must be running to perform a maintenance adjustment, keep hands, feet, clothing, and any parts of the body away from the engine and any moving parts. Keep everyone away.

If major repairs are ever needed or assistance i s required, contact an Authorized TORO Distributor.

To be sure of optimum performance and safety, always purchase genuine TORO replacement parts and accessories. Replacement parts and accessories made by other manufactures could be dangerous. Altering this equipment in any manner may affect the equipment's operation, performance, durability or its use may result in injury or death. Such use could void the product warranty of The Toro Company.

ALWAYS purchase Cushman®* replacement parts for Cushman 5th wheel implements.

*Cushman is a registered trademark of A Ransomes America Corporation Company.

Safety and Instruction Decals

Safety decals and instructions are easily visible to the operator and are located near any area of potential danger. Replace any decal that is damaged or lost.



54-0890



75-5190

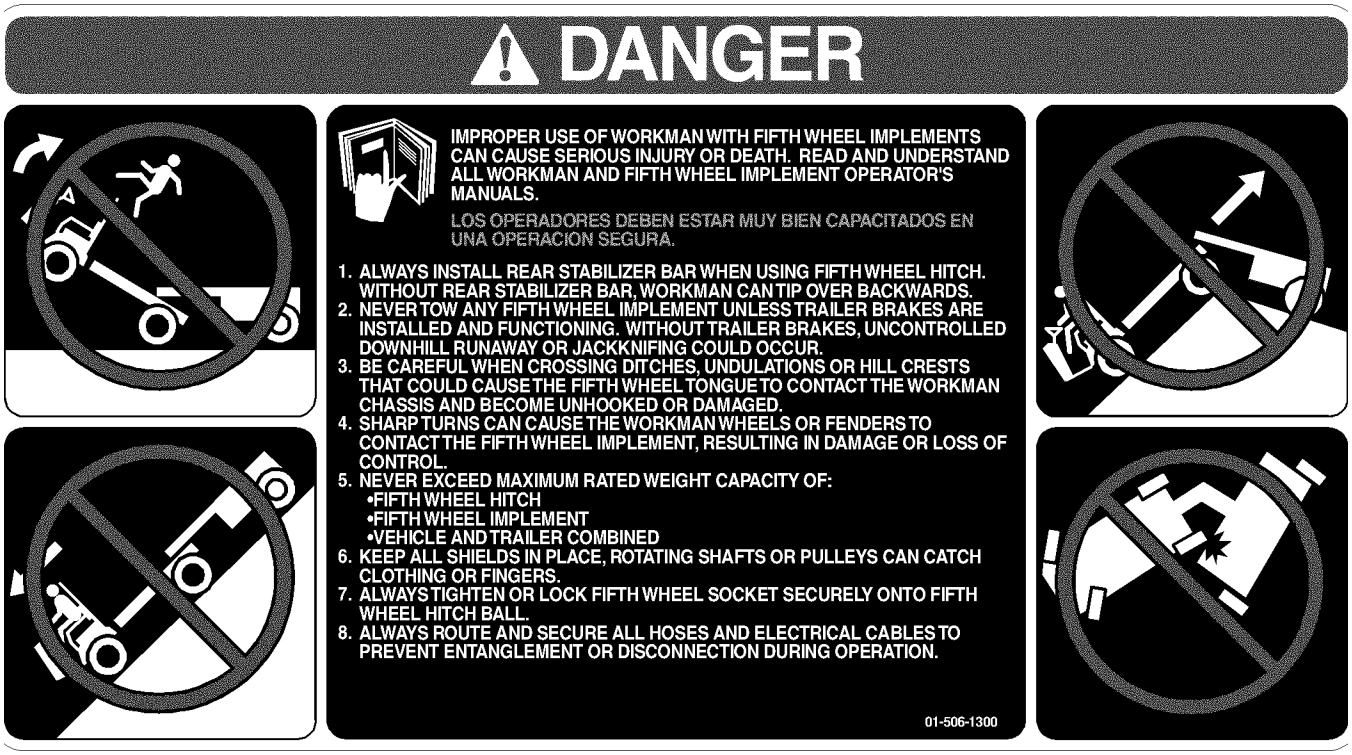

01-506-1300

Specifications

Ball Height: 30.7” above ground.

Ball Size: 2” Diameter

Rated Capacity:
400 lb.(181kg) max. trailer tongue wt.
1500lb.(680kg) max. trailer gross wt. w/o brakes
3500lb.(1587kg) max. trailer GVW w/brakes

Construction: Welded Steel hitch plate with rubber isolated ball.

Rear Stabilizer: Fastens to Workman axle. Welded steel construction.

Workman Mounting Zone: 2/3rd area of Work–man cargo zone.

Shipping Weight: 80 lbs

Brake Controller: Electric controller with variable output to adjust braking force. Actuated automatically with Workman brake pedal or separately by pressing button on controller by hand.

Retrofits these Cushman 5th Wheel Implements: 5th Wheel Topdresser (Model 898561)
5th Wheel Dump Trailer (Model 898560)
5th Wheel GA' 60 Aerator (Model 898558)

IMPORTANT: GA–60 also requires Toro Model 44232 GA–60 Adapter Kit.

Set Up Instructions

Important The Remote Hydraulic Control Kit (Model 07415) must be installed on Workman® vehicles with a serial number 239999999 or lower before installation of the 5th Wheel Hitch Kit.

Installing the Electric Brake Controller

Note: Step one is only required on vehicles with serial numbers greater than 240000001.

1. Drill two holes, 3/16 inch in diameter, in the center of the flat part of the dash to the left side of steering wheel as shown in figure 2.

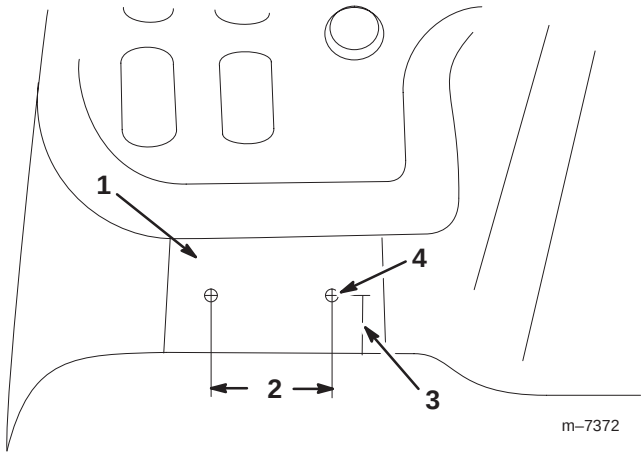

Figure 2

1. Flat panel, left side dashboard
2. Distance between drill holes, 3-5/16 inches
3. Height of drill holes from bottom of the dashboard, 3/4 inch
4. Diameter of drill holes, 3/16 inch

2. Mount brake controller and spacer to dash panel below steering wheel using the two holes provided (Fig. 3).

3. Mount connector bracket to the left side of the rear frame of the Workman, using the front two bolts of the main engine support tube (Fig. 5).

4. Disconnect battery.

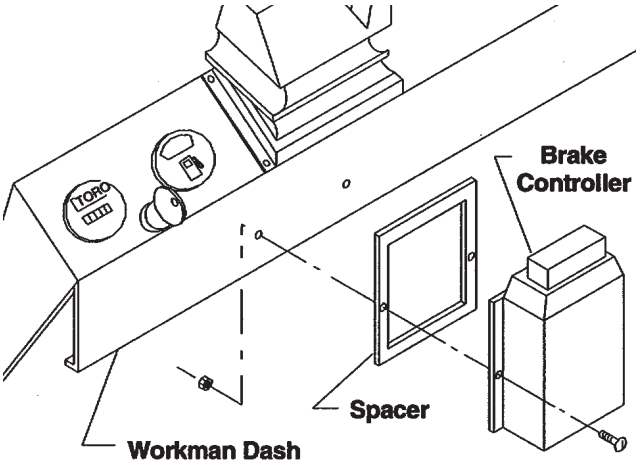

Figure 3

5. Install wire harness:

A. Attach 4-terminal connector to electric brake controller's connector.

B. Attach 2-terminal connector (one green, one black) to the mating open connector (one white/black, one brown) from the Workman vehicle's wire harness. This connector is located under the dash.

C. Attach black wire with eyelet from the electric controller to the ground bolt near the fuse block.

D. Attach 1–terminal red connector to the red wire coming from the fuse block of the Workman.

E. Route wire harness alongside main vehicle wire harness toward rear of vehicle. Attach connector end of harness to (92–4524) connector bracket with fasteners. Attach threaded connector cover chain to one of the fasteners.

F. Secure wire harness to Workman in several places with wire ties.

G. Connect battery.

Danger

Operating a 5th wheel implement without remote trailer brake assist can result in serious injury or death.

- **Always assure brakes are adjusted and operating properly.**
- **NEVER tow implements unless electric brakes are connected and functioning.**

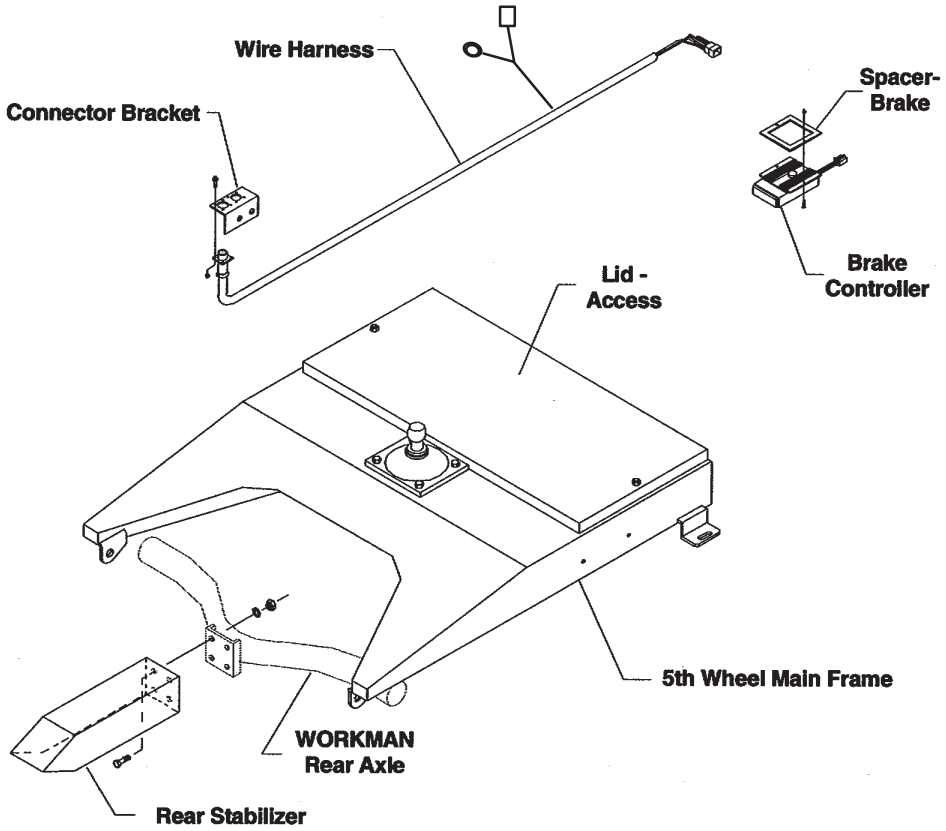

Figure 4

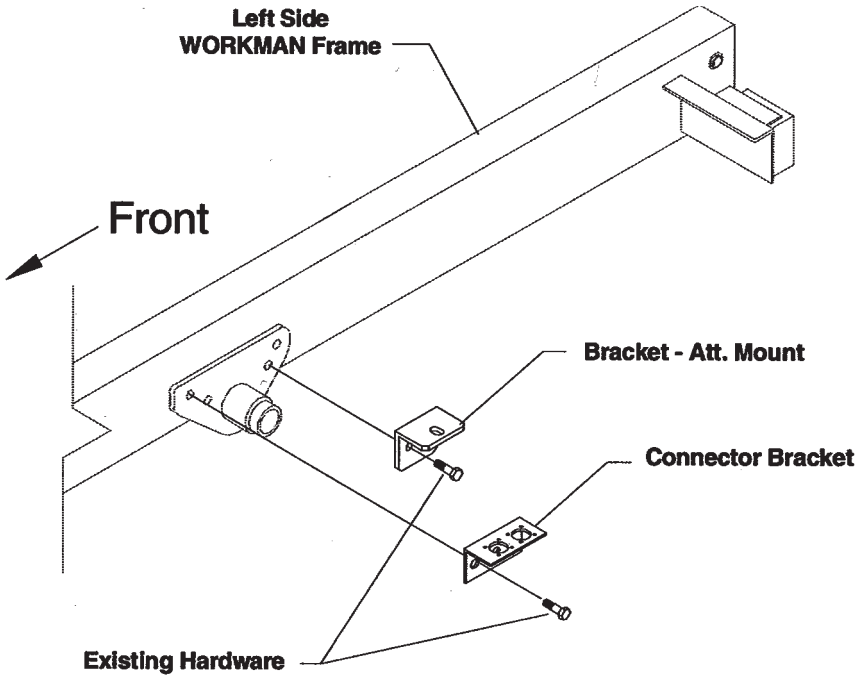

Figure 5

Install Rear Stabilizer

1. Remove tow hitch (if installed) from rear axle of Workman.
2. Install rear stabilizer with four 3/8 x 1 inch bolts, lock washers and hex nuts. Make sure the channel legs are pointing down.

Danger

Towing a 5th wheel implement without rear stabilizer installed can result in serious injury or death.

- **Unexpected sudden stops by the 5th wheel implement, such as hitting an obstacle, may cause the Workman to tip over backward. The rear stabilizer limits the amount the Workman can rotate rearwards.**
- **NEVER tow the 5th wheel implements without rear stabilizer installed.**

Install 1/3 Area Attachment or Shield

The 5th wheel hitch kit is a 2/3 area attachment. The front 1/3 area of the Workman cargo zone must be covered with a 1/3 area attachment or 1/3 shield (93–9225).

Warning

Rotating pulleys, fans, and belt in the front 1/3 area of the Workman cargo zone can catch loose clothing or body parts and can cause serious injury.

- **NEVER use the 5th wheel kit without the 1/3 area covered**

Install the 5th Wheel Hitch Plate

1. Remove the full bed, 2/3 bed, or 2/3 area attachment from the Workman.
2. Attach both Bracket Attachment Mounts (92–2667) to both sides of the Workman, using the rear two bolts of the main engine support tube. Do not tighten these bolts at this time. (Fig. 6)
3. Set the 5th wheel plate on top of the Workman frame channels. (Fig. 6)
4. Attach 5th wheel hitch plate to rear of frame using both clevis pins (92–1233) and secure with lynch pins (92–1298). (Fig. 6)
5. Connect front of 5th wheel hitch plate to bracket attachment mounts using (2) 1/2” x 1–1/4” bolts, (4) flat washers and (2) lock nuts. Tighten all six bolts. (Fig. 6)

6. Mount operator manual tube to 5th wheel hitch plate. (Fig. 7)

7. Install cover of 5th wheel hitch plate and secure with hardware shown in Fig. 8.

8. Attach the Bracket–Wire (92–4544) with 7/16" x 1–3/4" capscrew, "SAE" flat washer and lock nut from loose parts bag. (Fig. 9)

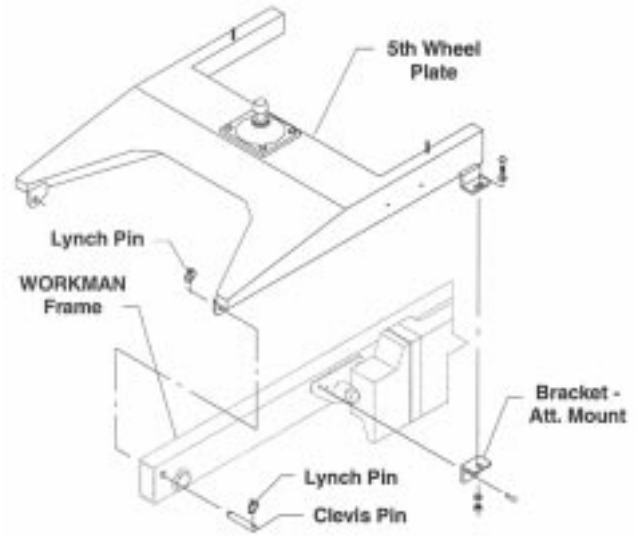

Figure 6

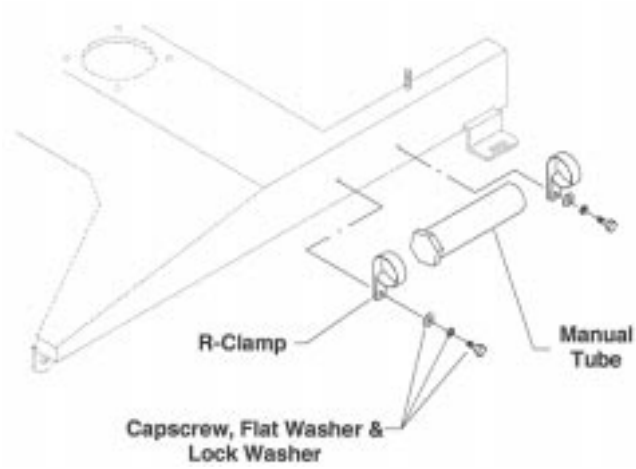

Figure 7

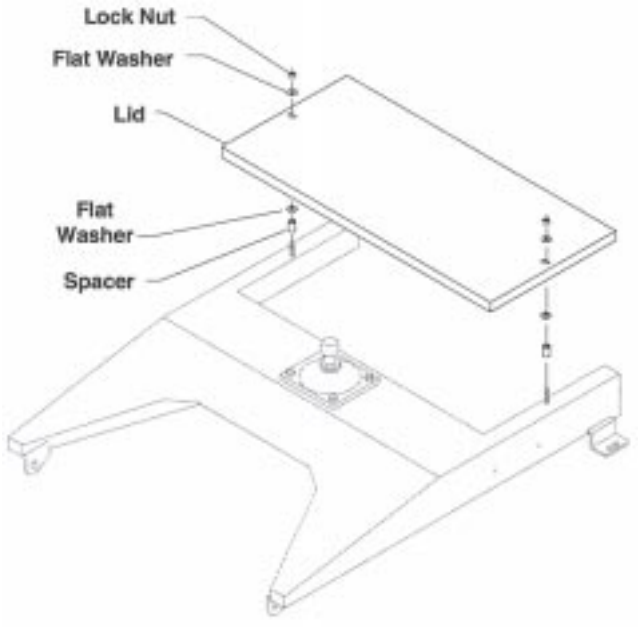

Figure 8

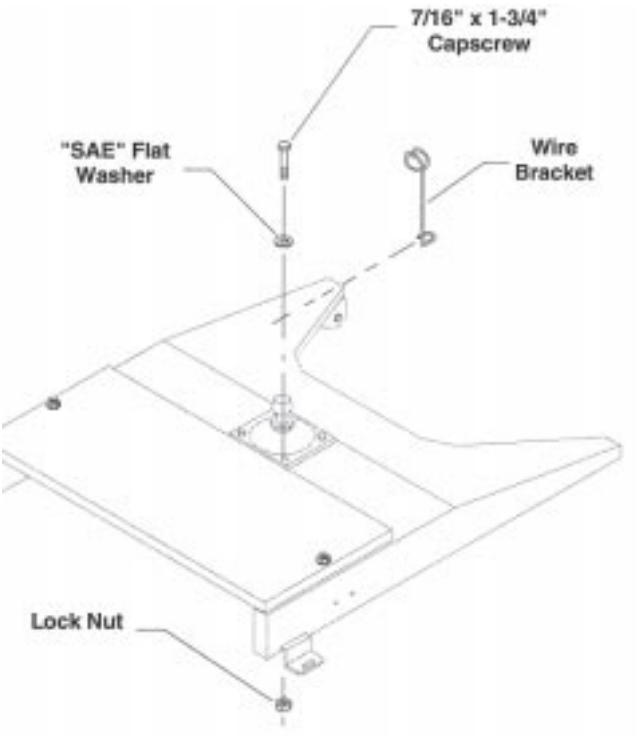

Figure 9

Install Male Quick Coupler-Cushman Implements

Cushman 5th wheel implements use one male and one female quick coupler to power their 5th wheel implements.

Important For Workman vehicles with a serial number of 239999999 or lower and a remote hydraulic kit installed, it is necessary to replace the female quick coupler of the Cushman 5th wheel implement with a male coupler available from Toro Parts. For Workman vehicles with a serial number of 240000001 or higher, both quick couplers on the 5th wheel implement will need to be replaced with the quick couplers and adapters supplied in this kit.

1. Relieve hydraulic pressure in the Cushman 5th wheel implement hoses by fully lowering the implement or using the uplatch device of the implement. Refer to your Cushman operator's manual for instructions.
2. Remove both couplers and drain hydraulic oil from the hoses. Replace the Cushman male quick coupler (previously removed) and install the new male quick coupler included in the Toro 5th wheel kit onto the other hose, using pipe sealant to seal the threads.

Important **Check the hydraulic oil level in the Workman transaxle after the 5th wheel implement has been connected and the hydraulic circuit actuated at least two cycles. Low oil level can damage the Workman transaxle or hydraulic circuit.**

The Workman's hydraulic system operates on Dexron III automatic transmission fluid. This fluid provides gear and bearing lubrication as well as fluid for operating the hydraulic system.

When the remote hydraulic system quick couplers are connected, hydraulic fluid flows from the 5th wheel implement to the vehicle. If the hydraulic fluid in the 5th wheel implement is not the same or equivalent to vehicle's, component damage to transaxle or hydraulic system may result.

Fluid compatibility should be checked and appropriate action taken if 5th wheel implement is subsequently used in conjunction with any other product using fluids other than Dexron III ATF.

Important **The Cushman GA–60 5th wheel aerator also requires Toro Model 44232 GA–60 Adapter Kit in order to be towed by the Workman.**

5th Wheel Tongues - Cushman Implements

1991 and prior Cushman 5th wheel kits had a ball height of approximately 31.25". Since 1992, a new low profile design has been in use with a ball height of approximately 25". The Toro ball height is similar to the 31.25" height used on 1991 and prior Cushman 5th wheel kits. Cushman utilizes various adapter kits to change the tongue height to accept either 25" or 31.25" ball heights. It may be necessary to convert your Cushman 5th wheel implement tongue to accept a 31.25" ball height in order to fit and function with the Workman 5th wheel hitch kit.

Operating Instructions

Safe operation begins before taking the vehicle out for a day's work. Read and understand the operating instructions for the Toro Workman, 5th wheel hitch kit, and 5th wheel implement before using the equipment. Allow only trained operators to use the vehicle.

Caution

The interlock switches are for the operator's protection, so do not bypass them. Check operation of the switches daily to assure interlock system is operating on the Workman.

- **If a switch is malfunctioning, replace it before operating.**
- **Regardless whether switches are operating properly or not, replace them every two years to assure maximum safety.**
- **Do not rely entirely on safety switches-use common sense!**

Connecting the 5th Wheel Implement to the Workman

1. Use the jack to lift tongue of 5th wheel implement high enough to clear the ball of the Workman 5th wheel hitch. Assure jack is locked securely in place. Block the wheels of the implement.
2. Move hoses and electrical cables from the 5th wheel implement back and out of the way.
3. Start the Workman and slowly back into the 5th wheel implement until the ball is directly beneath the socket in the tongue. Apply the brakes on the Workman, shut off the engine, engage parking brake and move shift lever to neutral.
4. Using the jack, slowly lower the tongue socket over the ball. Continue retracting the jack until it can be rotated into its storage position.

Note: Always apply a light coat of grease on the ball of the 5th wheel hitch before attaching the 5th wheel implement.

5. Turn the knob on the tongue socket until it securely grips the ball.

6. If the Workman has a rear 540 PTO kit installed, the PTO shield will have to be rotated downward to assure clearance with the 5th wheel implement tongue.

   A. Loosen top two retaining bolts of PTO shield.

   B. Remove bottom two bolts from PTO shield. Rotate PTO shield downward until second set of holes align. Reinstall bolts and tighten.

   C. Tighten top two retaining bolts.

Danger

An uncovered rotating spline can catch clothing and result in serious injury or death.

- **When finished with the 5th wheel implement and ready to use a rear PTO attachment, replace the PTO shield to the nominal setting.**
- **NEVER operate the Workman without the PTO shield in place.**

7. Move the lever of the Workman remote hydraulic system back and forth a few tiimes to relieve pressure on the quick couplers.

8. Route the hydraulic hoses in a manner that will not allow them to tangle or catch the Workman during turns. They must also be positioned to allow the Workman to turn without stretching and unplugging the hoses. Secure the hoses in place.

9. Connect the hydraulic hoses of the 5th wheel implement to the Workman by pushing into Workman quick couplers.

Important **Keep your quick couplers clean by wiping them off before you insert them. Also, clean the rubber quick couplers plugs on the Workman before installing them. This will keep dirt out of the Workman hydraulic system.**

10. Connect the electric brake wire harness of the 5th wheel implement to electrical connector located at left side of Workman frame. Route wire harness near the ball and through the wire bracket in a manner that will prevent entanglement with the Workman, yet provide sufficient slack to allow turns in either direction. Secure wire harness to 5th wheel implement tongue with plastic ties.

Danger

Jack-knifing or sliding could cause loss of control resulting in serious injury or death.

- **Always insure that the 5th wheel implement brakes are connected and functioning properly before using.**
- **The Workman brakes alone are not sufficient to provide adequate stopping of the vehicle and 5th wheel implement in many conditions, especially hillsides.**

11. Sit in operator's seat and start Workman. Check function of remote hydraulic system to assure hoses are in the correct quick coupler parts.

Important **Any 5th wheel implement uplatch device used to prevent accidental lowering must be removed before checking hydraulic function. Failure to remove could cause damage to the equipment when the remote hydraulics are actuated. Refer to 5th wheel implement operator's manual for procedure.**

In general:

A. Extending the hydraulic cylinder will lift the 5th wheel implement or dump the bed.

B. "ON" will engage the 5th wheel implement drive in the desired rotation for operation.

C. "OFF" will hold the 5th wheel implement in a desired lift position or stop its rotation.

D. Contracting the hydraulic cylinder will lower the 5th wheel implement or reverse the rotation.

E. For Workman vehicles with a serial number of 239999999 or lower and a remote hydraulic kit installed, "FLOAT" should only be used to relieve system pressure to aid installation of quick couplers.

If necessary, reverse hoses to achieve desired operation. Mark the correctly installed hose inserted into quick coupler port "A" with paint to assure proper connection in the future.

12. Start Workman, engage clutch, shift into gear, release park brake, and slowly release clutch to pull away. Be careful to clear obstacles with both Workman and 5th wheel implement. Carefully, turn the Workman left and then right, assuring that clearance is maintained between the Workman and the 5th wheel implement in all conditions, and that hydraulic hoses or electrical wires do not stretch too tight or become entangled. Never turn so sharp that the Workman tires or fenders contact the 5th wheel implement.

13. To disconnect the 5th wheel implement, reverse the procedures used to connect it. Block the wheels of the 5th wheel implement and insure the jack is securely locked into position before raising the tongue. Relieve hydraulic pressure in hoses prior to disconnecting the quick couplers by lowering 5th wheel implement to ground or against its uplatch device.

Using the Electric Brakes

The electric trailer brakes are designed to be actuated automatically whenever the brake pedal of the Workman is depressed. The trailer brakes alone may be actuated by depressing the red manual override bar on top of the brake controller. Always assure the trailer brakes are connected and functioning properly before using the equipment.

1. 1. Before operating, check to see if the controller is functioning by setting the brake output control to MAXIMUM and depressing and holding down the brake pedal of the Workman. The red manual bar should glow red.

Note: The red bar will not glow unless the 5th wheel implement electric brake harness is connected

2. Adjust the brake output control by initially setting at approximately 3/4 of the travel from MINIMUM towards MAXIMUM. With this adjustment, make a few slow speed test stops on dry pavement. Slide the control towards MAXIMUM for firmer braking and towards MINIMUM for lighter braking until the brakes are set just short of skidding on dry pavement. If uncertain about the adjustment, leave slide control setting at MAXIMUM.

3. Depressing the brake pedal of the Workman will cause simultaneous braking of all four Workman wheels and the 5th wheel implement. The trailer brakes alone can be actuated by pressing and holding the red manual bar on the controller.

Warning

The brake controller case may become hot and cause burns through frequent application of trailer brakes.

- **DO NOT TOUCH when hot.**
- **Allow case to cool before performing any maintenance.**

4. Check brakes periodically and adjust when necessary. Follow the adjustment procedures outlined in the 5th wheel implement operator's or service manual.

Towing the 5th Wheel Implement

1. Read and understand all the operating instructions of the Workman and the 5th wheel implement.

2. During turns, slow down and observe the clearance of the Workman with the 5th wheel implement. Because of the high centrally mounted ball position, the Workman can turn sharp enough to eventually contact the 5th wheel implement. Exercise caution during sharp turns.

3. The tongue of the 5th wheel implement could contact the Workman when traversing severe ground undulations or cresting a hill, causing the tongue to become unhooked or damage the Workman or 5th wheel implement. Identify your path in advance and avoid ground undulations, such as ditches or sharp hill crests.

4. With heavily loaded 5th wheel implements, the overall traction of the Workman will be greatly reduced. Approach hills from the least steep slope if possible. Be prepared to back down a slope if you are unable to climb it. NEVER operate on hillsides without properly functioning brakes, the Workman brakes alone may not be sufficient to stop both the Workman and 5th wheel implement on severe slopes.

5. In general, use LOW range gears on the Workman when using heavy or fully loaded 5th wheel equipment.

6. During turns, the inside wheel of the 5th wheel implement will track differently than that of the Workman. When turning near obstacles such as trees, curbs, or cart path corners, swing the Workman out as wide as possible and make a gradual turn, watching the inside wheel of the 5th wheel implement to assure clearance.

Danger

When raising a 5th wheel implement using the remote hydraulic control lever, hydraulic oil will bypass over a relief valve when the cylinder reaches the end of its travel, stopping power assist to the steering gear and increasing steering effort.

- **Release the remote hydraulic control valve to NEUTRAL immediately after raising the implement to regain power assist to the steering.**

Maintenance

1. Always stop Workman engine and set parking brake before performing any maintenance activity on either the Workman or 5th wheel implement.
2. Lower the 5th wheel implement to the ground or against its uplatch pins to prevent accidental lowering during maintenance. The Workman engine does not need to be running to lower the 5th wheel implement.
3. The engine access cover of the 5th wheel can be removed by unscrewing the two knobs and lifting the cover off the 5th wheel hitch plate. NEVER operate the Workman without this cover in place.

Important The front lip of the access cover is raised to provide adequate engine clearance. Replace the cover with the raised lip forward.

4. Periodically check to see that the lock nut holding the ball to the rubber mount has not loosened. Tighten if needed.
5. Routinely inspect the rubber ball mount for cracks or deterioration. If either condition exists, the rubber mount must be replaced.
6. Under frequent heavy duty operation with 5th wheel implements, maintenance to the Workman should be performed twice as frequently. Lubricate axle drive shaft fittings daily.

Seasonal Storage

1. Thoroughly clean the 5th wheel hitch and implement.
2. Tighten all fasteners.
3. Lubricate all grease fittings and bearings. Wipe off excess lubricant.
4. The unit should be stored out of the sun to prolong the life of the rubber mount. If stored outside it is recommended to cover the 5th wheel plate with a tarp.
5. Block wheels of 5th wheel implement.

Hydraulic Schematics

Vehicles with serial number 239999999 or lower and w/Optional Remote Hydraulic Kit installed

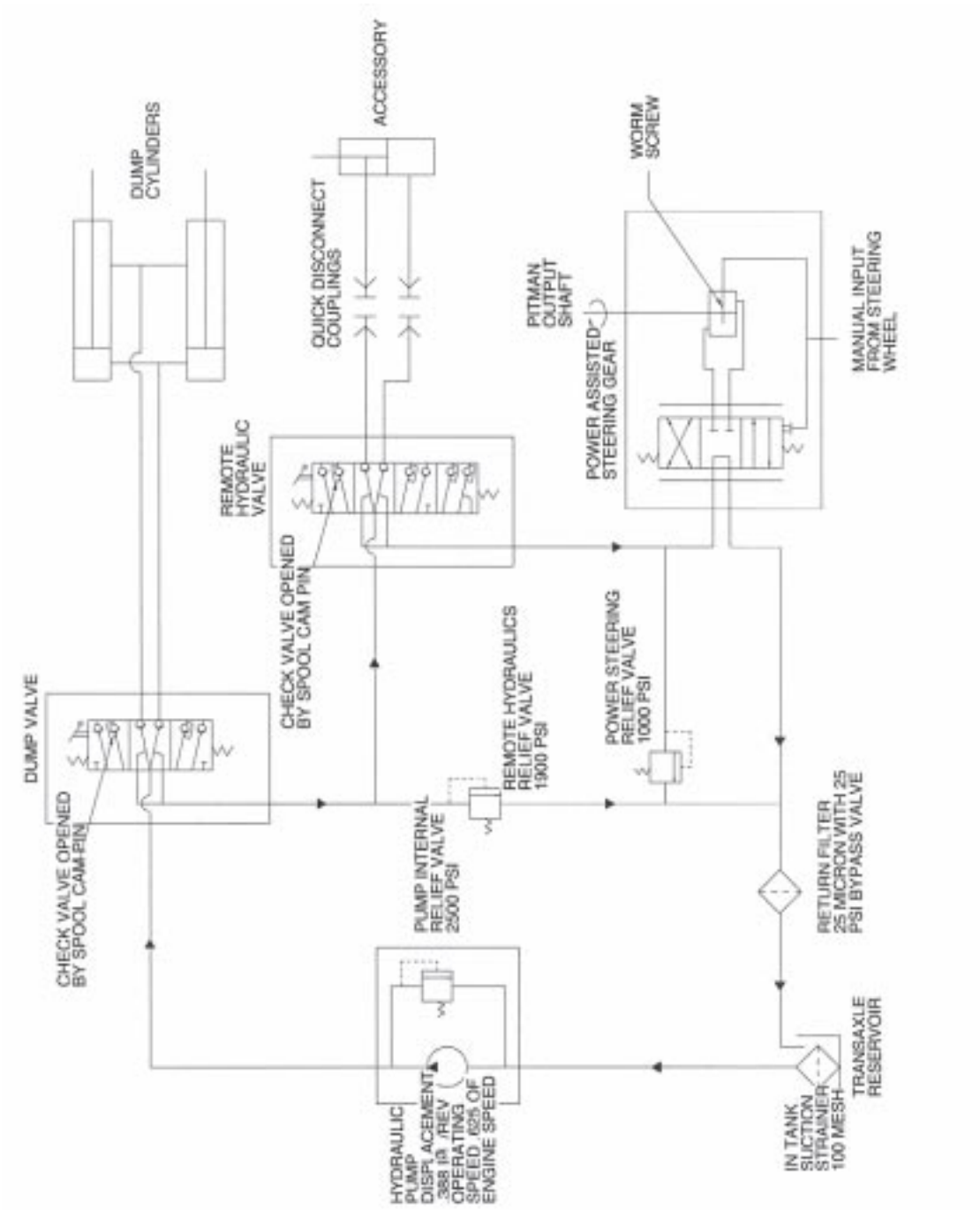

Vehicles with serial number 240000001 or higher

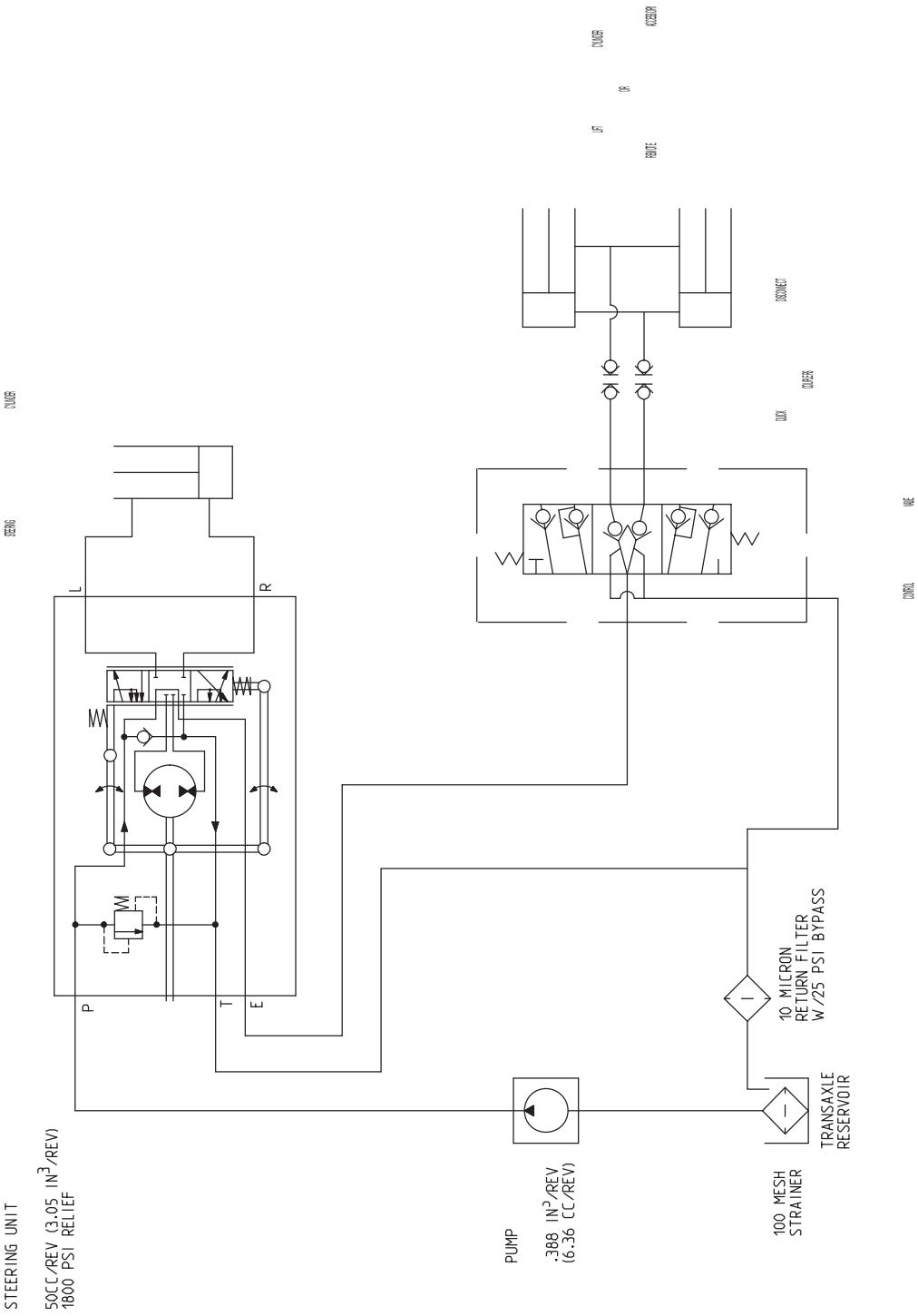

Electrical Schematic

Brake Controller

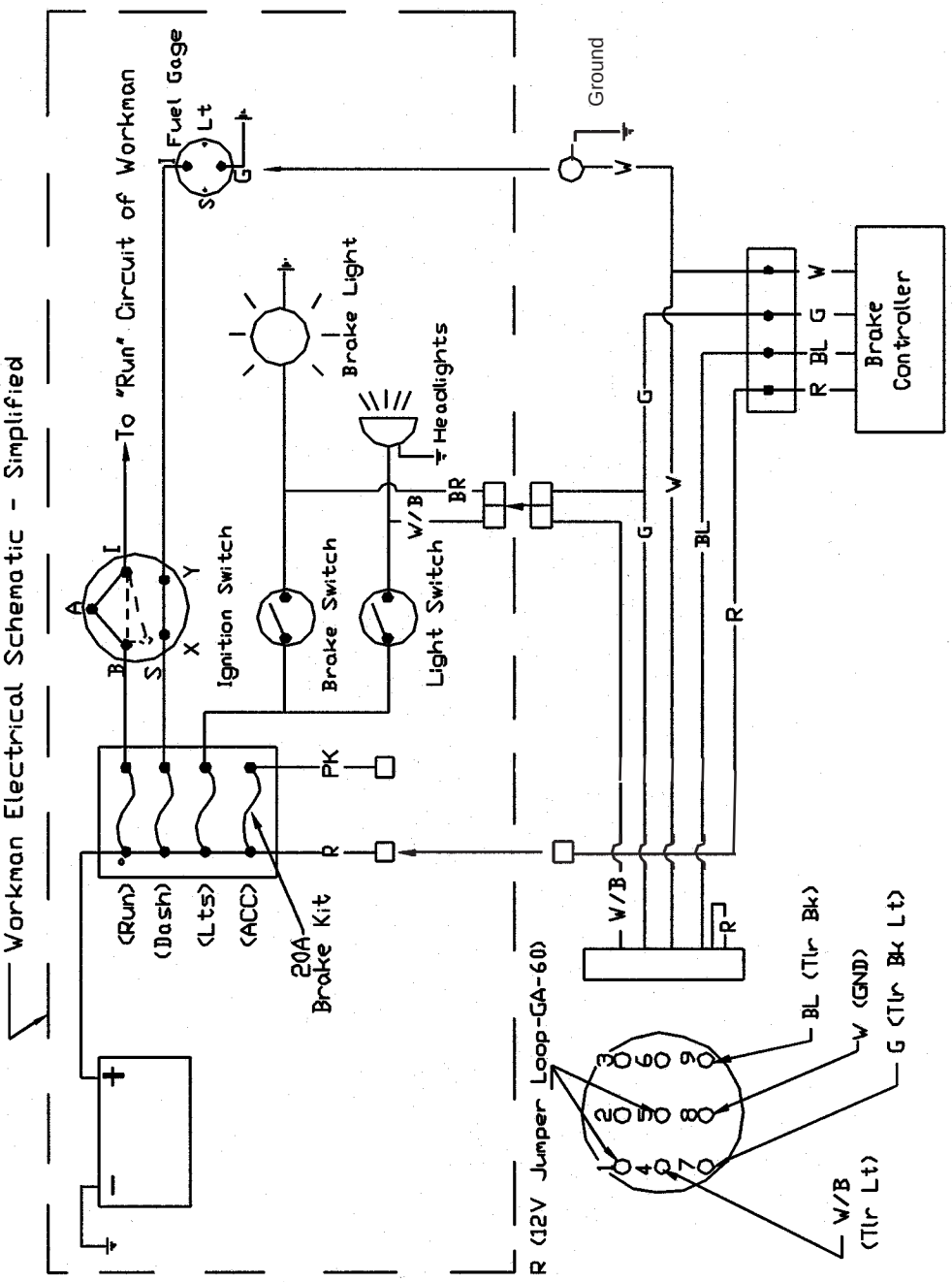

The Toro General Commercial Products Warranty

A Two-Year Limited Warranty

Conditions and Products Covered

The Toro Company and its affiliate, Toro Warranty Company, pursuant to an agreement between them, jointly warrant your Toro Commercial Product ("Product") to be free from defects in materials or workmanship for two years or 1500 operational hours*, whichever occurs first. Where a warrantable condition exists, we will repair the Product at no cost to you including diagnosis, labor, parts, and transportation. This warranty begins on the date the Product is delivered to the original retail purchaser.

* Product equipped with hour meter

Instructions for Obtaining Warranty Service

You are responsible for notifying the Commercial Products Distributor or Authorized Commercial Products Dealer from whom you purchased the Product as soon as you believe a warrantable condition exists.

If you need help locating a Commercial Products Distributor or Authorized Dealer, or if you have questions regarding your warranty rights or responsibilities, you may contact us at:

Toro Commercial Products Service Department
Toro Warranty Company
8111 Lyndale Avenue South
Bloomington, MN 55420-1196
952-888-8801 or 800-982-2740
E-mail: commercial.service@toro.com

Owner Responsibilities

As the Product owner, you are responsible for required maintenance and adjustments stated in your operator's manual. Failure to perform required maintenance and adjustments can be grounds for disallowing a warranty claim.

Items and Conditions Not Covered

Not all product failures or malfunctions that occur during the warranty period are defects in materials or workmanship. This express warranty does not cover the following:

- Product failures which result from the use of non-Toro replacement parts, or from installation and use of add-on, modified, or unapproved accessories
- Product failures which result from failure to perform required maintenance and/or adjustments
- Product failures which result from operating the Product in an abusive, negligent or reckless manner
- Parts subject to consumption through use unless found to be defective. Examples of parts which are consumed, or used up, during normal Product operation include, but are not limited to, blades, reels, bedknives, tines, spark plugs, castor wheels, tires, filters, belts, etc.
- Failures caused by outside influence. Items considered to be outside influence include, but are not limited to, weather, storage practices, contamination, use of unapproved coolants, lubricants, additives, or chemicals, etc.
- Normal "wear and tear" items. Normal "wear and tear" includes, but is not limited to, damage to seats due to wear or abrasion, worn painted surfaces, scratched decals or windows, etc.

Parts

Parts scheduled for replacement as required maintenance are warranted for the period of time up to the scheduled replacement time for that part.

Parts replaced under this warranty become the property of Toro. Toro will make the final decision whether to repair any existing part or assembly or replace it. Toro may use factory remanufactured parts rather than new parts for some warranty repairs.

General Conditions

Repair by an Authorized Toro Distributor or Dealer is your sole remedy under this warranty.

Neither The Toro Company nor Toro Warranty Company is liable for indirect, incidental or consequential damages in connection with the use of the Toro Products covered by this warranty, including any cost or expense of providing substitute equipment or service during reasonable periods of malfunction or non-use pending completion of repairs under this warranty. Except for the Emissions warranty referenced below, if applicable, there is no other express warranty. All implied warranties of merchantability and fitness for use are limited to the duration of this express warranty.

Some states do not allow exclusions of incidental or consequential damages, or limitations on how long an implied warranty lasts, so the above exclusions and limitations may not apply to you.

This warranty gives you specific legal rights, and you may also have other rights which vary from state to state.

Note regarding engine warranty: The Emissions Control System on your Product may be covered by a separate warranty meeting requirements established by the U.S. Environmental Protection Agency (EPA) and/or the California Air Resources Board (CARB). The hour limitations set forth above do not apply to the Emissions Control System Warranty. Refer to the Engine Emission Control Warranty Statement printed in your operator's manual or contained in the engine manufacturer's documentation for details.

Countries Other than the United States or Canada

Customers who have purchased Toro products exported from the United States or Canada should contact their Toro Distributor (Dealer) to obtain guarantee policies for your country, province, or state. If for any reason you are dissatisfied with your Distributor's service or have difficulty obtaining guarantee information, contact the Toro importer. If all other remedies fail, you may contact us at Toro Warranty Company.

Part No. 374-0031 Rev. a