TORO®

Operator's Manual

Haven™ Robotic 3000 m² (0.75 Acre) or 5000 m² (1.25 Acre) Lawnmower

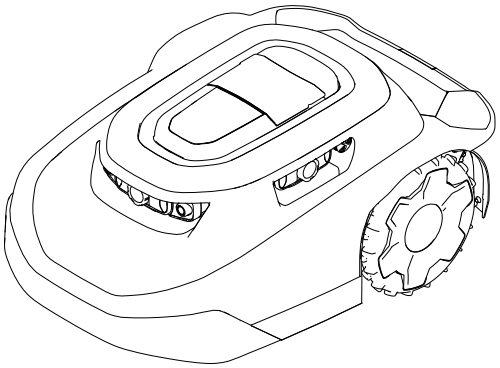

Model—Serial Range

20459, 20460, 20491, 20492, 20496, 20497, 30960, 30962, 30970, 30972, 30980, 30982, 31060, 31062, 31070, 31072, 31080, 31082—324000000 and Up

3469-111D

CE UK CA

Original Instructions (EN)

3469-111

Disclaimers and Regulatory Information

This product complies with all relevant European directives; for details, please see the separate product specific Declaration of Conformity (DOC) sheet.

⚠ WARNING

CALIFORNIA
Proposition 65

The power cord on this product contains lead, a chemical known to the State of California to cause birth defects or other reproductive harm. Wash hands after handling.

Battery posts, terminals, and related accessories contain lead and lead compounds, chemicals known to the State of California to cause cancer and reproductive harm. Wash hands after handling.

Table of Contents

Disclaimers and Regulatory Information 2
Chapter 1: Introduction 1–1
- Intended Use 1–1
- Getting Help 1–2
  - Haven Help Center 1–2
- Manual Conventions 1–3
  - Safety Alert Classifications 1–3

Chapter 2: Safety 2–1
- General Safety 2–1
- FCC/IC Statement 2–1
- Safety and Instructional Decals 2–3

Chapter 3: Product Overview 3–1
- Robotic Mower Overview 3–3
  - SmartZone™ Mowing Pattern 3–3
  - Charging Station Overview 3–4
- Hub Overview 3–5
- Creating the Working Areas 3–6
  - Creating the Working Area Process Overview 3–6
  - Operating on Slopes 3–7
  - Untrained Obstacles 3–8
- Control Panel 3–9
- Specifications 3–11
- Attachments/Accessories 3–12

Chapter 4: Setup 4–1
- Downloading the App and Adding the Mower 4–1
- Connecting the Hub 4–10
- Determining a Location for the Charging Station 4–12
- Installing the Power Supply and Charging Station 4–14
- Preparing the Lawn Before Using the Robotic Mower 4–16
- Ideal Conditions for Setting up the Mower 4–16

© 2026—The Toro® Company

8111 Lyndale Ave So
Bloomington, MN 55044

Contact us at www.Toro.com
Printed in the USA

All rights reserved

Starting and Charging the Mower 4–17
Installing the Mower Handle 4–18
Removing the Mower Handle and Storing it in the Charging Station 4–19
Chapter 5: Operation 5–1
Operation Safety 5–1
Trimming Areas of the Lawn that the Robotic Mower Cannot Access 5–3
Repositioning the Mower if it is Stuck on an Obstacle 5–4
Manually Stopping and Starting the Mower 5–5
Docking and Charging the Mower 5–5
Installing an Optional Anti-Theft Device 5–6
Chapter 6: Maintenance 6–1
Recommended Maintenance Schedule 6–1
Maintenance Safety 6–1
Battery and Charging Station Safety 6–3
Servicing the Battery 6–4
Disconnecting the Battery 6–4
Connecting the Battery 6–5
Replacing the Wheels 6–6
Removing the Wheels 6–6
Installing the Wheels 6–7
Replacing the Blades 6–8
Cleaning 6–9
Cleaning the Mower and Charging Station 6–9
Cleaning or Replacing the Lens Protectors 6–11
Disposing of Waste 6–11
Chapter 7: Storage 7–1
Storage Safety 7–1
Preparing for Off-Season Storage 7–1
Chapter 8: Troubleshooting 8–1
Chapter 9: Glossary 9–1
California Proposition 65 Warning Information

Introduction

⚠ WARNING ⚠

Failing to follow the operating instructions or to receive proper training may result in death or serious injury.

- **To maximize the safety, performance, and proper operating of this machine, carefully read and fully understand the content of this *Operator's Manual*.**
- **For more information on safe operating practices, including safety tips and training materials, go to www.Toro.com.**

Intended Use

This robotic lawnmower is intended to be used by residential homeowners for autonomous, programmable lawn care. It is designed primarily for cutting grass on well-maintained lawns or residential properties. This is a maintenance lawnmower that maintains the height of the grass consistently. Using the mower, battery, charging station, and power supply for purposes other than their intended use could endanger you and bystanders.

Read this information carefully to learn how to operate and maintain your product properly and to avoid injury and product damage. You are responsible for operating the product properly and safely.

Getting Help

Visit www.Toro.com for product safety and operation training materials, accessory information, help finding a dealer, or to register your product.

Whenever you need service, genuine Toro parts, or additional information, contact an Authorized Service Dealer or Toro Customer Service and have the model and serial numbers of your product ready. These numbers are located on the serial plate on your product (1). Write the numbers in the space provided.

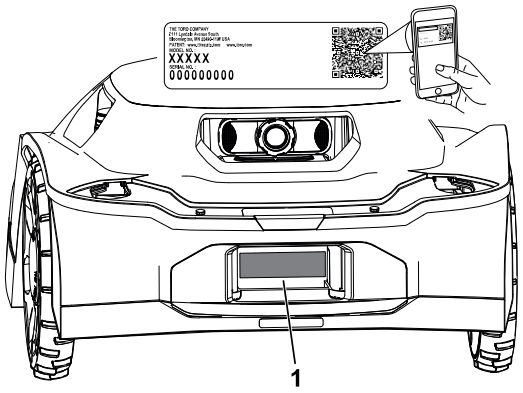

G489469

IMPORTANT

With your mobile device, you can scan the QR code on the serial number decal (if equipped) to access warranty, parts, and other product information.

Model Number:		**Serial Number:**	

Haven Help Center

Visit the Haven Help Center (pubs.toro.com/helpcenter) to view instructional videos, FAQs, help articles, the *Operator's Manual*, full product safety content, and the product warranty.

G445734

Manual Conventions

This manual identifies potential hazards and has safety messages identified by the safety-alert symbol, which signals a hazard that may cause serious injury or death if you do not follow the recommended precautions.



G405934

This manual uses 2 words to highlight information. **Important** calls attention to special mechanical information and **Note** emphasizes general information worthy of special attention.

Safety Alert Classifications

The safety-alert symbol shown in this manual and on the machine identifies important safety messages that you must follow to prevent accidents.

Safety-alert symbol appears above information that alerts you to unsafe actions or situations and is followed by the word **DANGER**, **WARNING**, or **CAUTION**.

DANGER

Danger indicates an imminently hazardous situation which, if not avoided, *will* result in death or serious injury.

WARNING

Warning indicates a potentially hazardous situation which, if not avoided, *could* result in death or serious injury.

CAUTION

Caution indicates a potentially hazardous situation which, if not avoided, *may* result in minor or moderate injury.

General Safety

- The operator/supervisor of the machine is responsible for any accidents or hazards occurring to others or their property.
- Read, understand, and follow all these instructions and warnings before using the machine.
- Improperly using or maintaining the machine could result in serious injury or death. To reduce this potential, follow all safety instructions.
- Do not allow children or untrained people to operate or service this device. Allow only people who are responsible, trained, familiar with the instructions, and physically capable to operate or service the device.

FCC/IC Statement

This product contains three modular approvals:

FCC ID	IC	Module
OF7-OCB	3575A-OCB	OCB
A8TBM70ABCDEFGH	12246A-BM70BLES1F2	BLE

Models may have an optional CalAmp module containing FCC ID APV-2630MB and IC 5843C-2630MB

⚠ WARNING ⚠

The user that changes or modifications not expressly approved by The Toro Company could void the user's authority to operate the equipment.

Note: This equipment has been tested and found to comply with the limits for a Class B digital device, pursuant to part 15 of the FCC Rules. These limits are designed to provide reasonable protection against harmful interference in a residential installation. This equipment generates, uses and can radiate radio frequency energy and, if not installed and used in accordance with the instructions, may cause harmful interference to radio communications. However, there is no guarantee that interference will not occur in a particular installation. If this equipment does cause harmful interference to radio or television reception, which can be determined by turning the equipment off and on, the user is encouraged to try to correct the interference by one or more of the following measures:

- Reorient or relocate the receiving antenna.
- Increase the separation between the equipment and receiver.

- Connect the equipment into an outlet on a circuit different from that to which the receiver is connected.
- Consult the dealer or an experienced radio/TV technician for help.

This device complies with Industry Canada's licence-exempt RSSs. Operation is subject to the following two conditions:

- This device may not cause interference; and
- This device must accept any interference, including interference that may cause undesired operation of the device.

Safety and Instructional Decals

Safety decals and instructions are easily visible to the operator and are located near any area of potential danger. Replace any decal that is damaged or missing.

Decal Part: 133-8061



s_decal133-8061

Decal Part: 137-9705

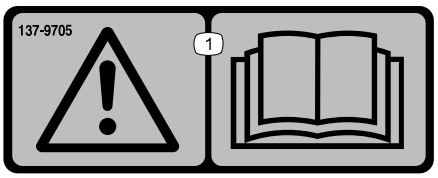

s_decal137-9075

1 Warning—read the *Operator's Manual*.

Decal Part: 140-4055

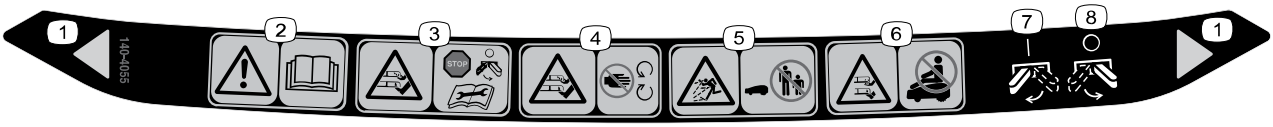

decal140-4055

1. Cutting width
2. Warning—read the *Operator's Manual*.
3. Cutting/dismemberment hazard of hands and feet —shut off the mower before doing maintenance.
4. Cutting/dismemberment hazard of hands and feet —stay away from moving parts.
5. Thrown object hazard—keep bystanders away.
6. Cutting/dismemberment hazard of hands and feet —do not ride on the mower.
7. Mower—on
8. Mower—off

Product Overview

Mower:

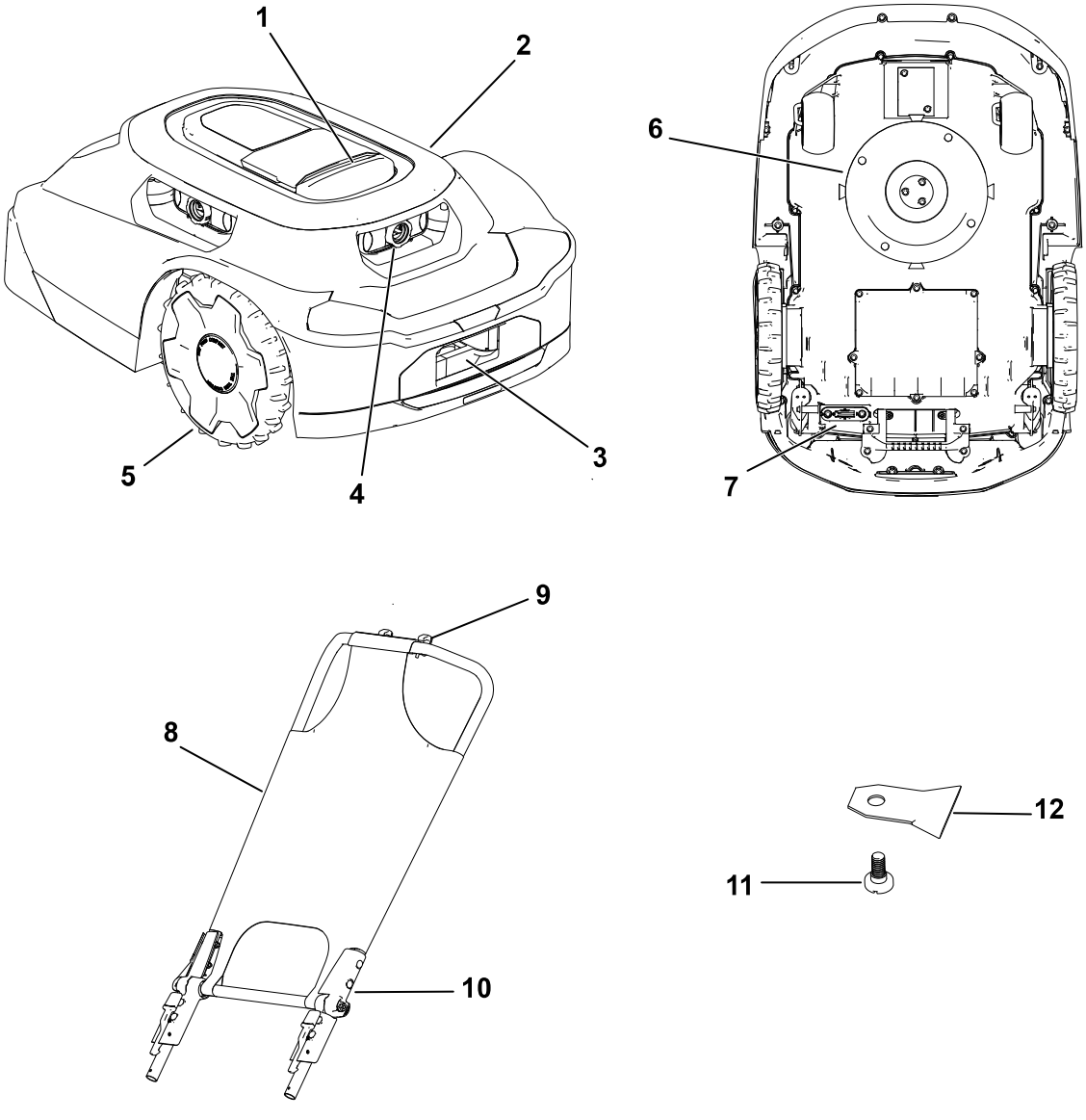

G468383

1. Stop button
2. Mower body
3. Mower charging port
4. Lens/Imaging system
5. Wheel
6. Cutting system
7. Power switch
8. Sunshade/cover
9. Phone opening
10. Mower handle
11. Blade screw
12. Blade

Charging Station:

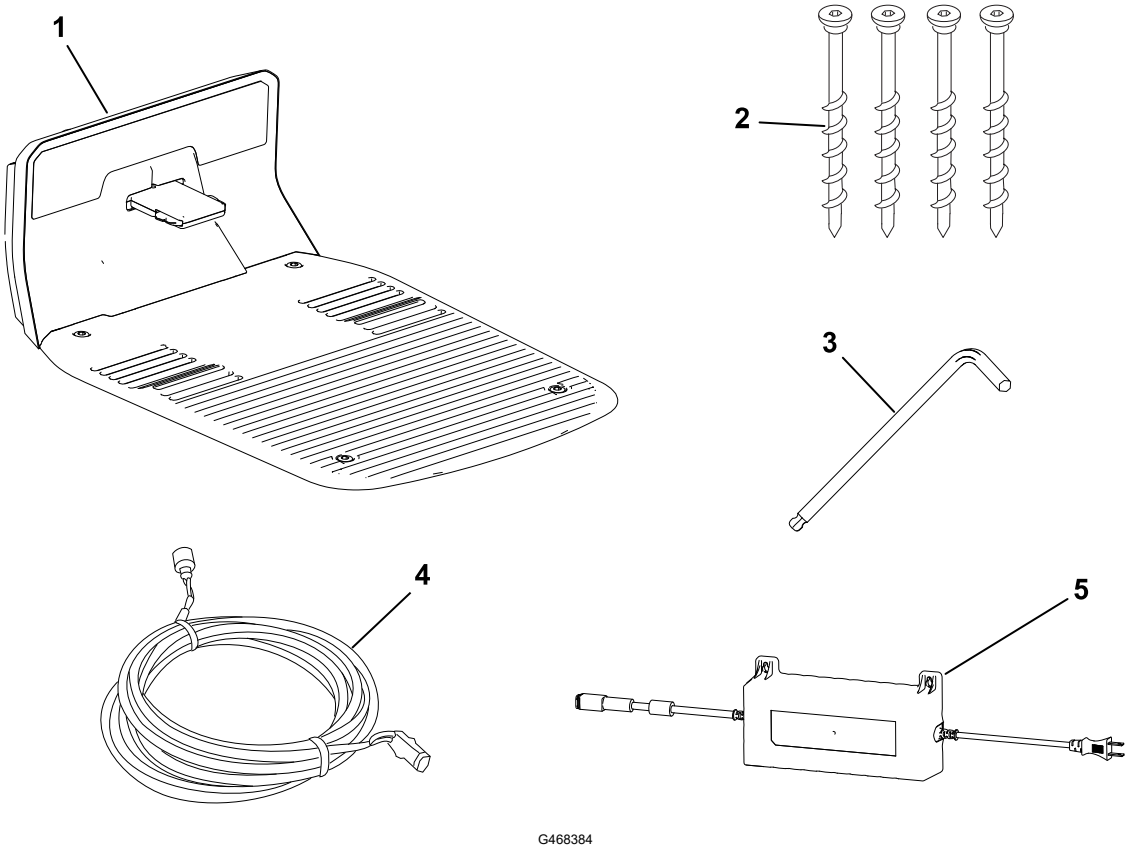

G468384

1. Charging station
2. Allen-head screws
3. Allen wrench
4. Low-voltage cable
5. Power supply

Hub:

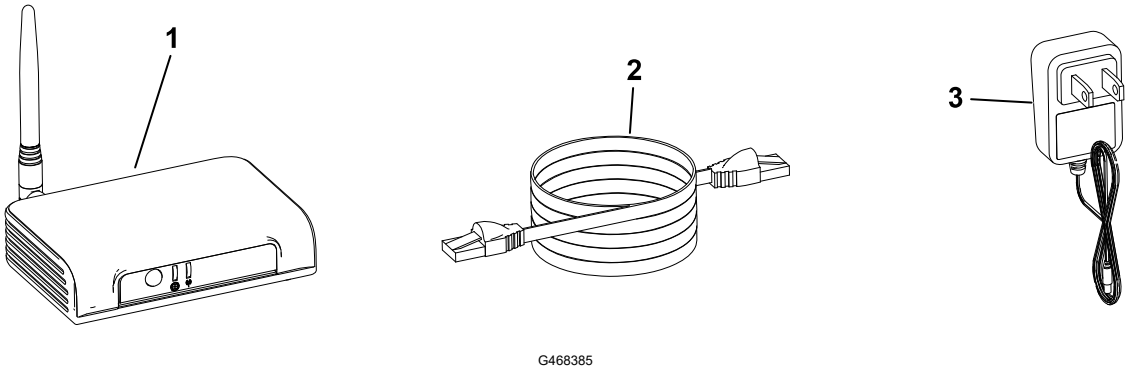

G468385

1. Hub
2. Ethernet cord
3. Power cord

Property Example:

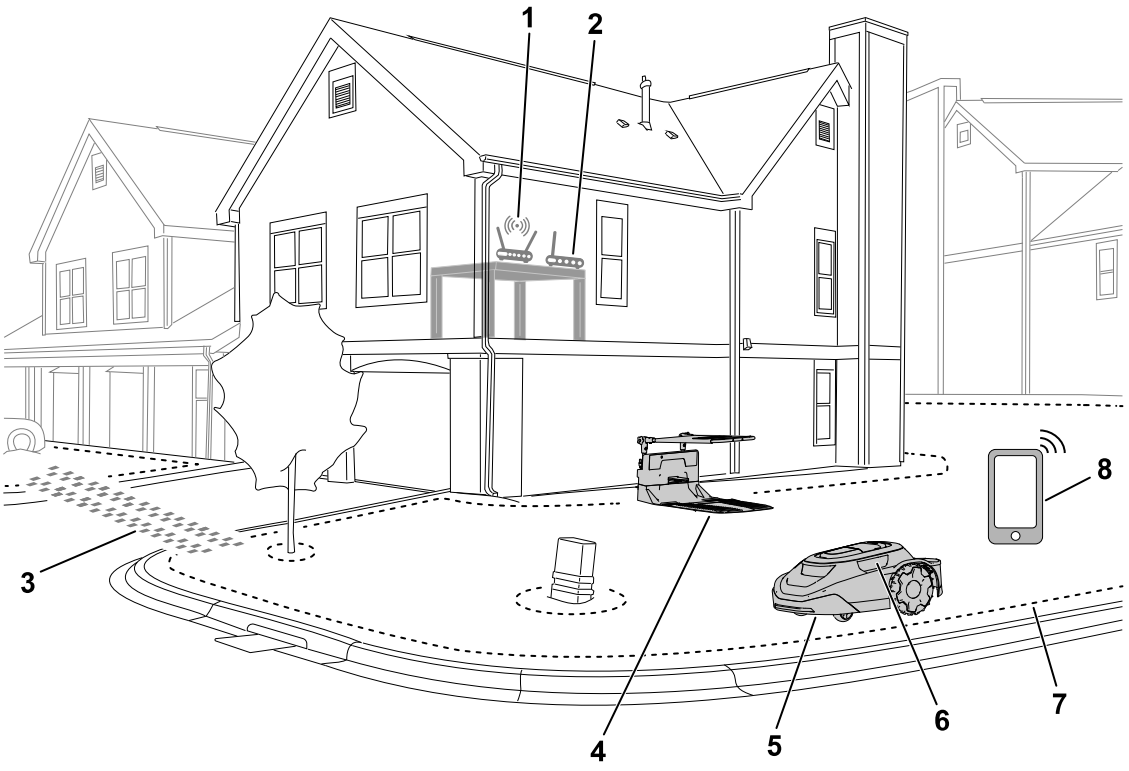

G469078

1. Wi-Fi router
2. Hub
3. Transit path
4. Charging station
5. Mower
6. Lens/imaging system
7. Working area perimeter
8. Mobile device

Robotic Mower Overview

The robotic mower is a maintenance lawn mower that maintains the height of the grass consistently. When the mower is not mowing your lawn, the mower returns to the charging station to charge before continuing with the next scheduled mowing task.

If the robotic mower contacts an object or reaches a boundary, it will change direction.

SmartZone™ Mowing Pattern

SmartZone maximizes mowing efficiency by progressively moving to unmowed areas of the lawn rather than staying in one mowing zone for too long.

The robotic mower does not follow a normal pattern; it follows a random pattern.

Charging Station Overview

When the mower battery charge is too low for mowing or when it reaches the end of a mowing task, the mower goes to the charging station to charge.

While charging, the indicator light on the mower **blinks** green. After fully charging, the light turns **solid** green.

After charging, the mower will exit the charging station and automatically continue with the next scheduled mowing task or it will remain in the charging station if there is not a scheduled task after fully charging.

Note: If the indicator lights on both the charging station and mower do not illuminate when the mower goes into the charging station, the mower is not charging.

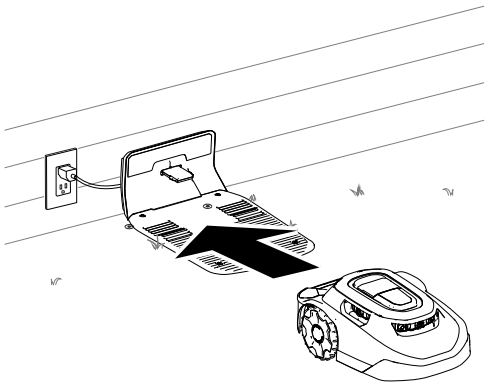

G430093

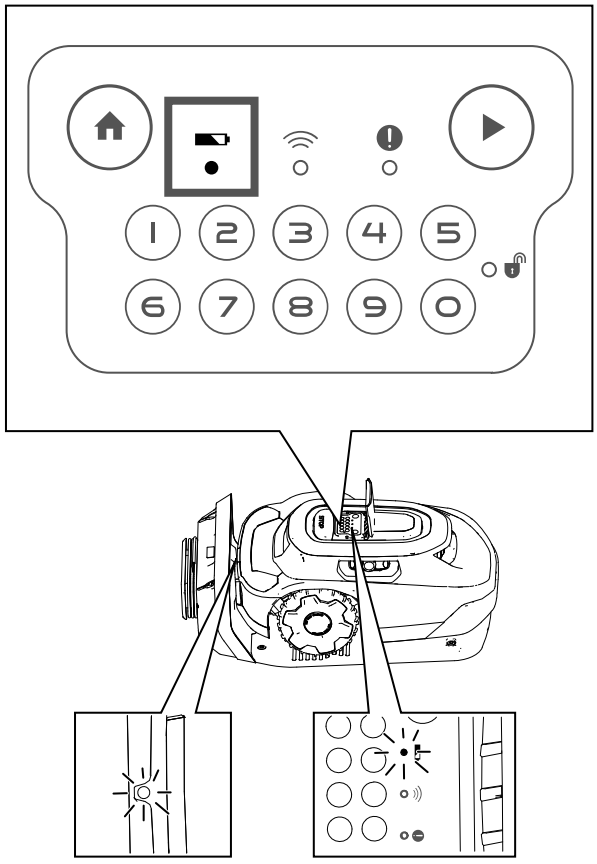

G430560

Hub Overview

The hub allows you to communicate with the mower from anywhere within your property. It uses your router to securely connect to the internet.

Communicating through encrypted radio signal, the hub provides a secure communication path and nearly three times the communication distance of a typical Wi-Fi router.

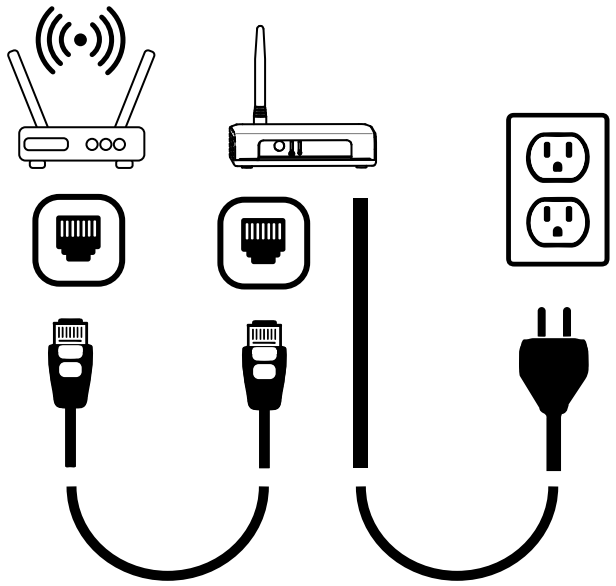

G430561

Creating the Working Areas

IMPORTANT

Follow the instructions in the app using your mobile device.

Refer to the following example of a property.

You can map the following objects as shown in the figure below.

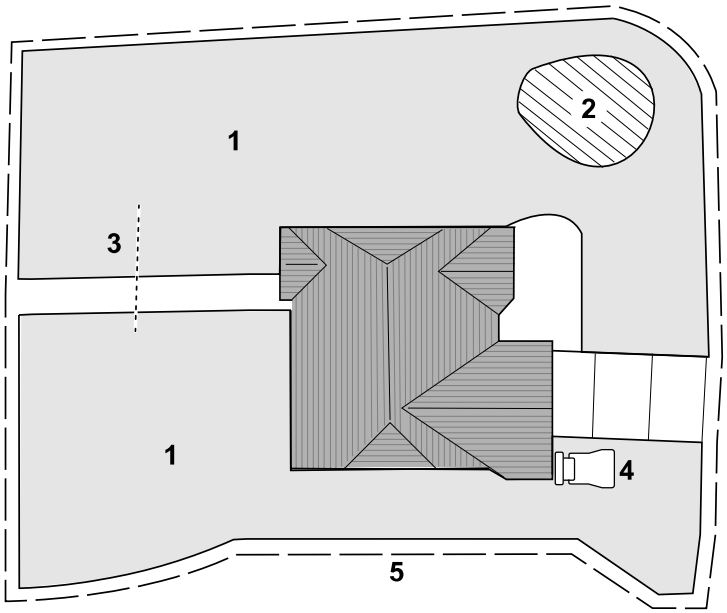

G530257

1. Mowing zone
2. Exclusion zone
3. Transit path
4. Charging station
5. Working area

Creating the Working Area Process Overview

IMPORTANT

Follow the instructions in the app using your mobile device.

In order for the mower to understand your lawn, it has to create a 3D map of your lawn. This is called the working area. Follow the instructions in the app to create your working area map.

1. Push the mower around the entire perimeter of your property.
2. Push the mower around the interior of your property using zig-zags spaced approximately 1.8 to 2.4 m (6 to 8 ft) apart.

   Note: If your lawn contains narrow passageways, such as a gate, push the mower through the passageway in a figure-8 as shown below.

Creating the Working Area Process Overview (continued)

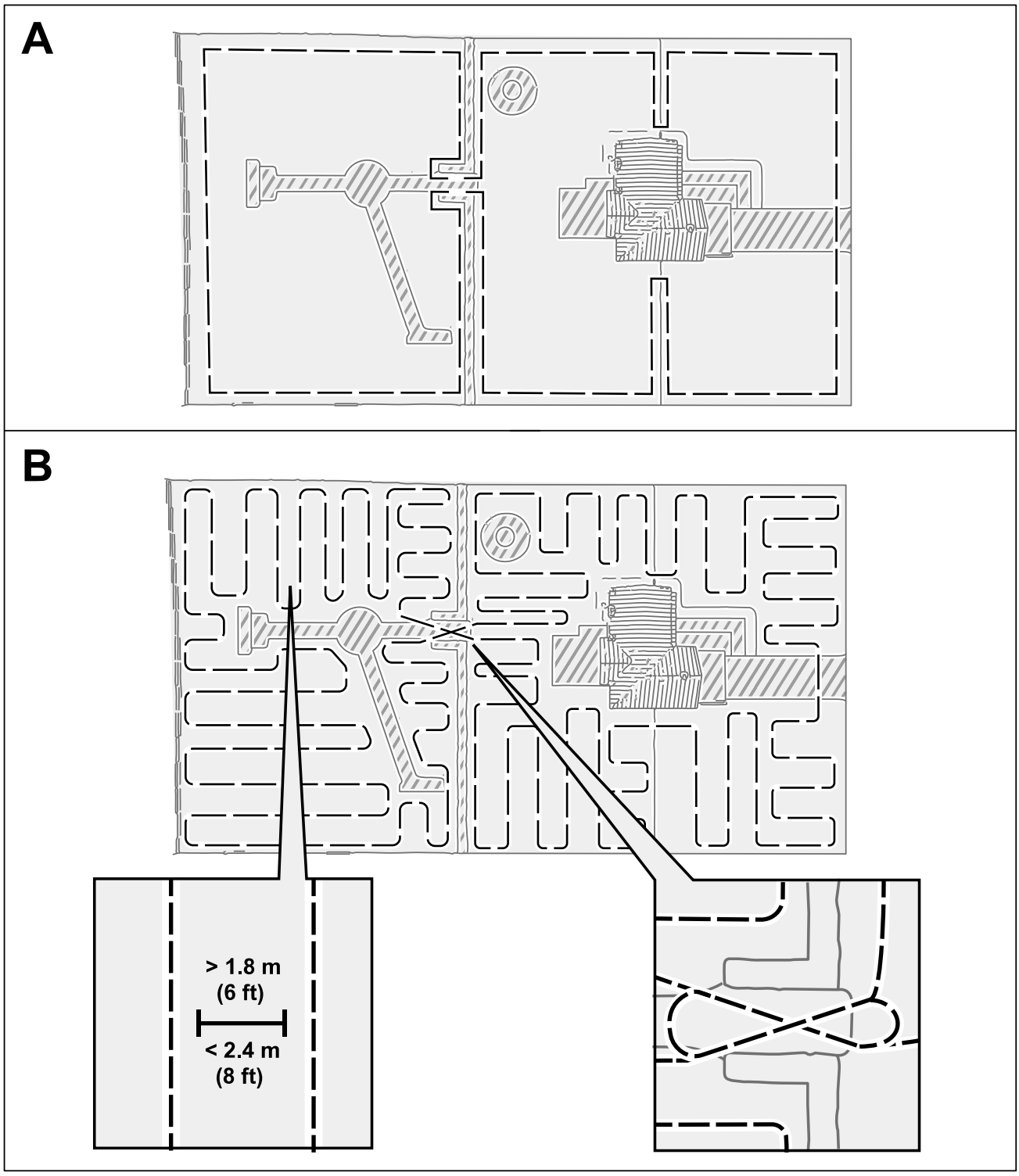

Operating on Slopes

The mower is able to operate on slopes up to 25° as long as there are no mowing zone boundaries on that slope. Use an exclusion zone to prevent the mower from operating down slopes that are steeper than allowed.

Operating on Slopes (continued)

Mowing zone boundaries should only be placed on slopes less than 15°. Otherwise, there is a risk that the mower will become stuck while turning at the boundary. However, if the boundary is at the top of a slope, or if there are permanent obstacles on the boundary that the mower is able to collide with, such as fences or dense hedges, boundaries can be added to slopes greater than 15° but less than 25°.

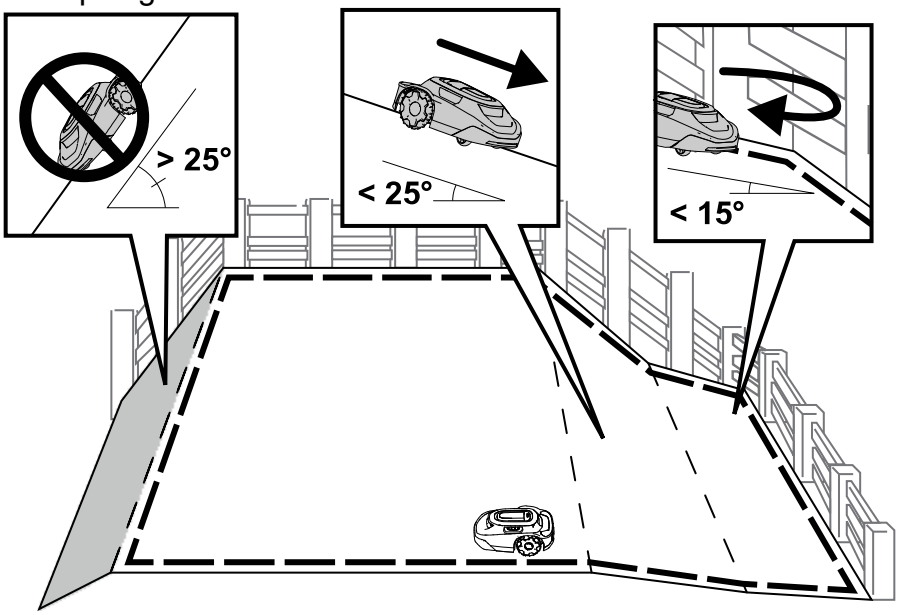

Untrained Obstacles

The mower is able to collide with untrained obstacles, such as rocks or roots, that are taller than 15 cm (6 inches) without damaging the mower. The mower will turn away after colliding with these types of objects and won't require an exclusion zone to be mapped.

However, it is recommended to use exclusion zones on any fixed objects to ensure quiet operation and prevent the mower from getting stuck on objects.

Objects that are shorter than 15 cm (6 inches) should be excluded using an exclusion zone or removed from your lawn. The mower could attempt to mow over these objects and the blades could be damaged.

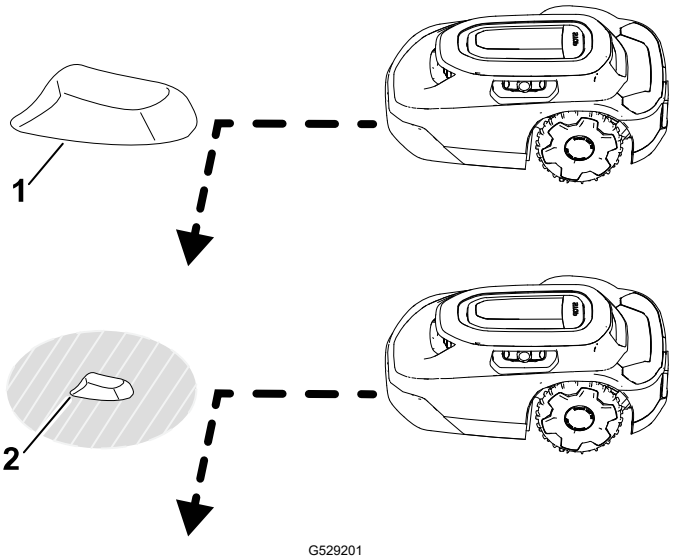

1 Object taller than 15 cm (6 inches)—no exclusion zone required.

2 Object shorter than 15 cm (6 inches)—exclusion zone required.

Control Panel

Become familiar with all the controls before you start and operate the mower.

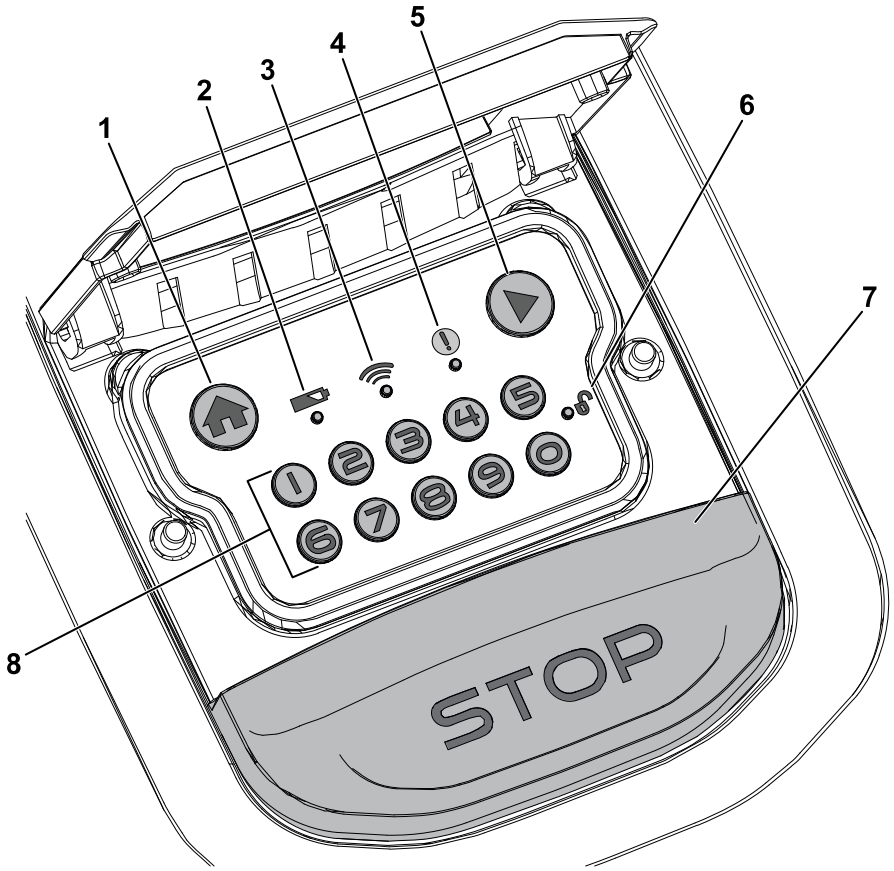

G484159

1. Home button
2. Battery indicator
3. Hub-connection indicator
4. Status indicator
5. Play (resume operation) button
6. Lock/unlock indicator
7. Stop button
8. Numeric keypad/Code buttons

Stop Button

The stop button manually stops the mower.

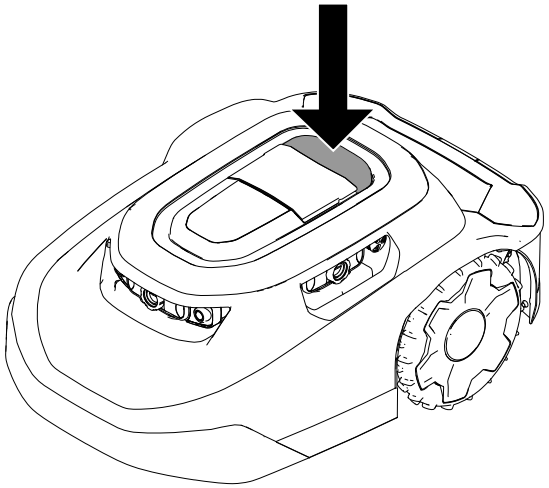

G430095

Home Button

The HOME button sends the mower to the charging station until the next scheduled mowing task.

Play (Resume Operation) Button

The PLAY (resume operation) button resumes mower activity according to the previously active function (i.e., scheduled mowing, unscheduled mowing, returning to the charging station) on the mobile application.

Numeric Keypad/Code Buttons

Using the numeric keypad, enter your 4-digit code to unlock the mower controls.

Hub-Connection Indicator

The hub-connection indicator illuminates green when the mower is able to communicate with the hub or red when the mower is unable to communicate with the hub.

Battery Indicator

The battery indicator illuminates green if the battery is properly charged or red if the battery needs to be charged.

Status Indicator

If the status indicator illuminates **green**, the mower is functioning properly; if the indicator is **red**, there is an active fault.

If a fault occurs, open the app to view the fault.

Visit the Haven Robotic Mower Help Center for assistance.

If you cannot correct the fault, contact an Authorized Service Dealer.

Lock/Unlock Indicator

After entering your 4-digit code, the lock/unlock indicator illuminates green if the mower is unlocked or red if the 4-digit code you entered was incorrect, which keeps the mower locked.

Running Light

The running light (1) illuminates on top of the mower when it is mowing autonomously.

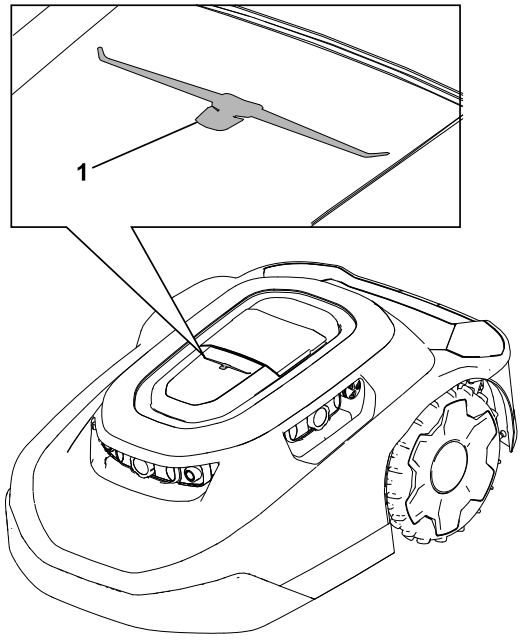

G477896

Specifications

Note: Specifications and design are subject to change without notice.

Mower:

	3000 m² (0.75 Acre) Models	**5000 m² (1.25 Acre) Models**
Width	54 cm (21-5/16 inches)	54 cm (21-5/16 inches)
Length	81 cm (32 inches)	81 cm (32 inches)

Mower: (continued)

Height	34 cm (13-1/2 inches)	34 cm (13-1/2 inches)
Weight	18.5 kg (41 lb)	18.9 kg (42 lb)

Charging Station:

Width	62 cm (24-1/2 inches)
Length	93 cm (36-3/4 inches)
Height **with** the sunshade installed	60 cm (23-1/2 inches)
Height **without** the sunshade installed	30 cm (11-3/4 inches)

Mower Docked in the Charging Station:

Width	62 cm (24-1/2 inches)
Length	96 cm (37-3/4 inches)
Height **with** the sunshade installed	60 cm (23-1/2 inches)
Height **without** the sunshade installed	34 cm (13-1/4 inches)

Hub

Dimensions (without the antenna installed)	4.4 x 3.1 x 1.2 inches
Weight	95 g (3.4 oz)
Certification Specs	The hub is intended to be supplied by an EIC 62368-1 certified external power supply with an LPS (ES1/PS2) output and an output rating of 5 Vdc, minimum 1.0 A
Port Speed	10/100 Mbps
Operating Temperature	0 to 40°C (32 to 104°F)
Storage Temperature	-20 to 60°C (-4 to 140°F)
Operating Humidity	10% to 80% RH, non-condensing

Attachments/Accessories

A selection of Toro approved attachments and accessories is available for use with the machine to enhance and expand its capabilities. Contact your Authorized Service Dealer or authorized Toro distributor or go to www.Toro.com for a list of all approved attachments and accessories.

To ensure optimum performance and continued safety certification of the machine, use only genuine Toro replacement parts and accessories.

Downloading the App and Adding the Mower

1. From the phone app store, download the MyToro app.

Figure 1 Apple download:

G430242

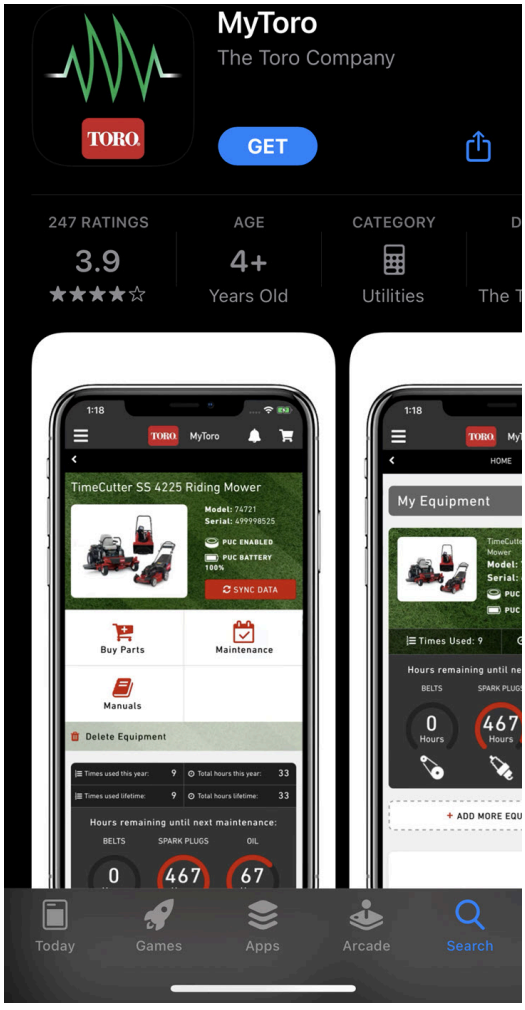

G362110

Figure 2 Android Google Play Store download:

G430241

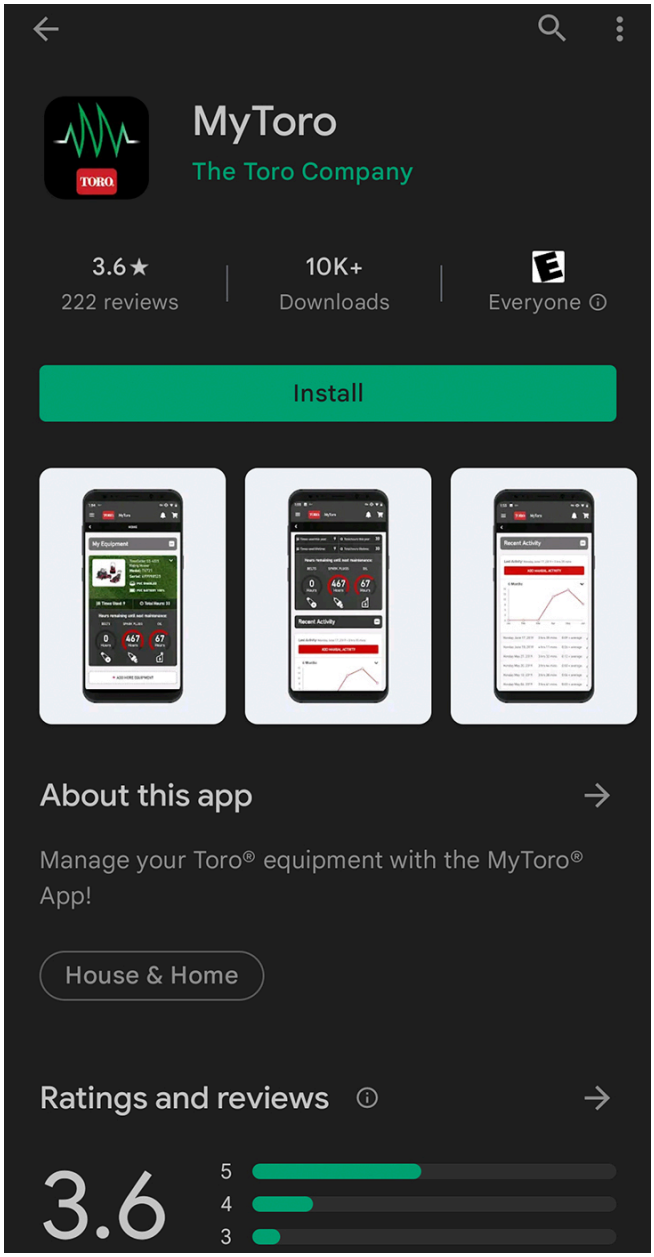

G387030

2. If you have an existing account, tap **Log In**.
   If you do not have an account, tap **Create Account**.

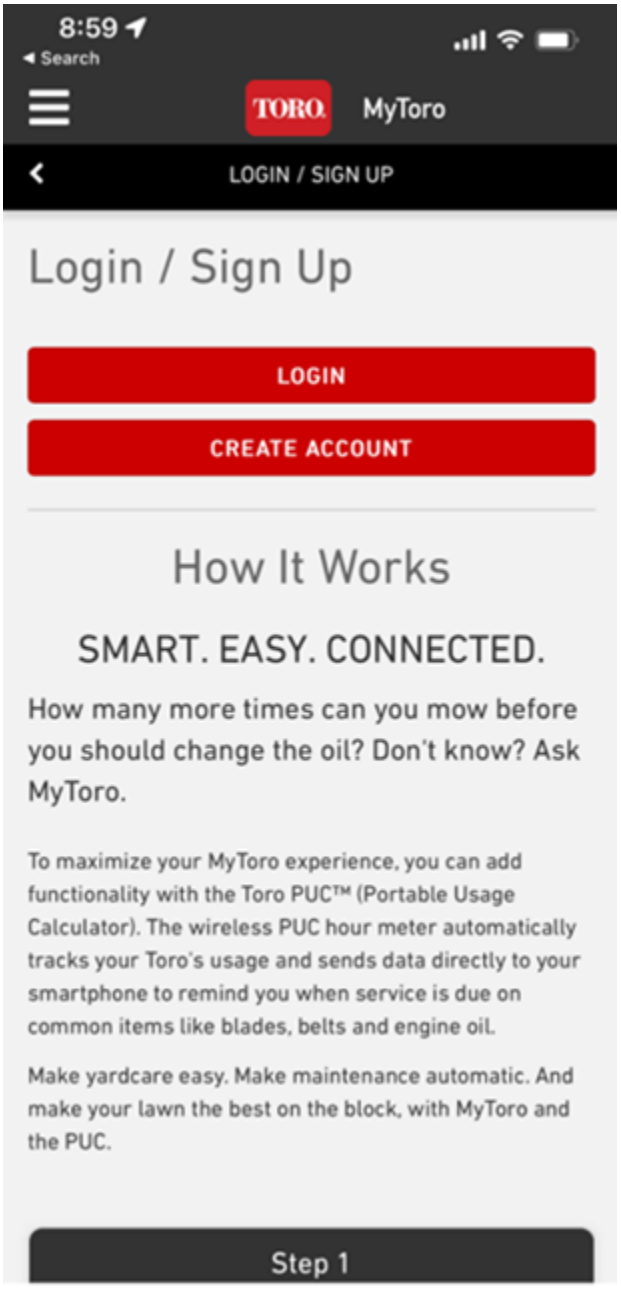

G445461

3. From the home screen, tap **Add Equipment**.

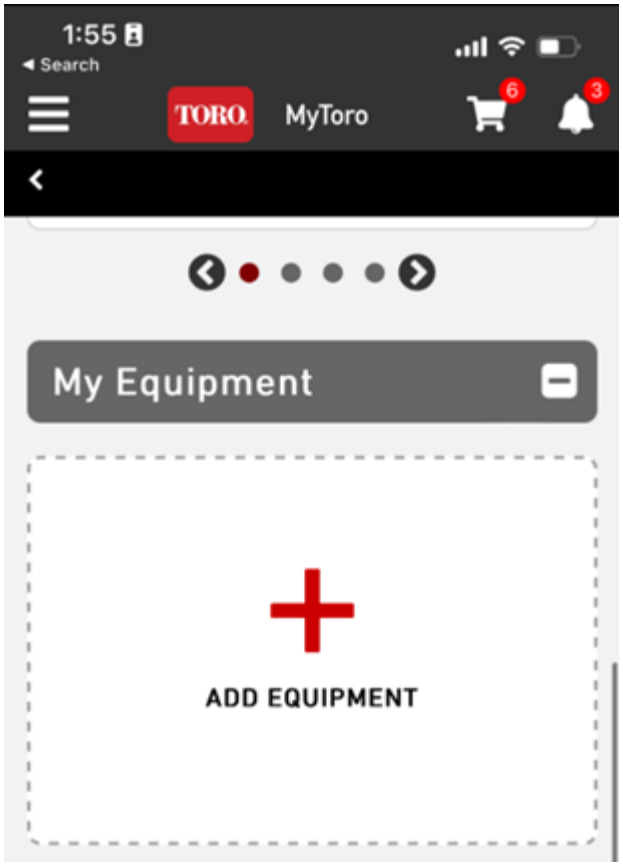

G445462

4. Enable the camera on your phone.

   Note: Alternatively, you can manually enter your new equipment information.

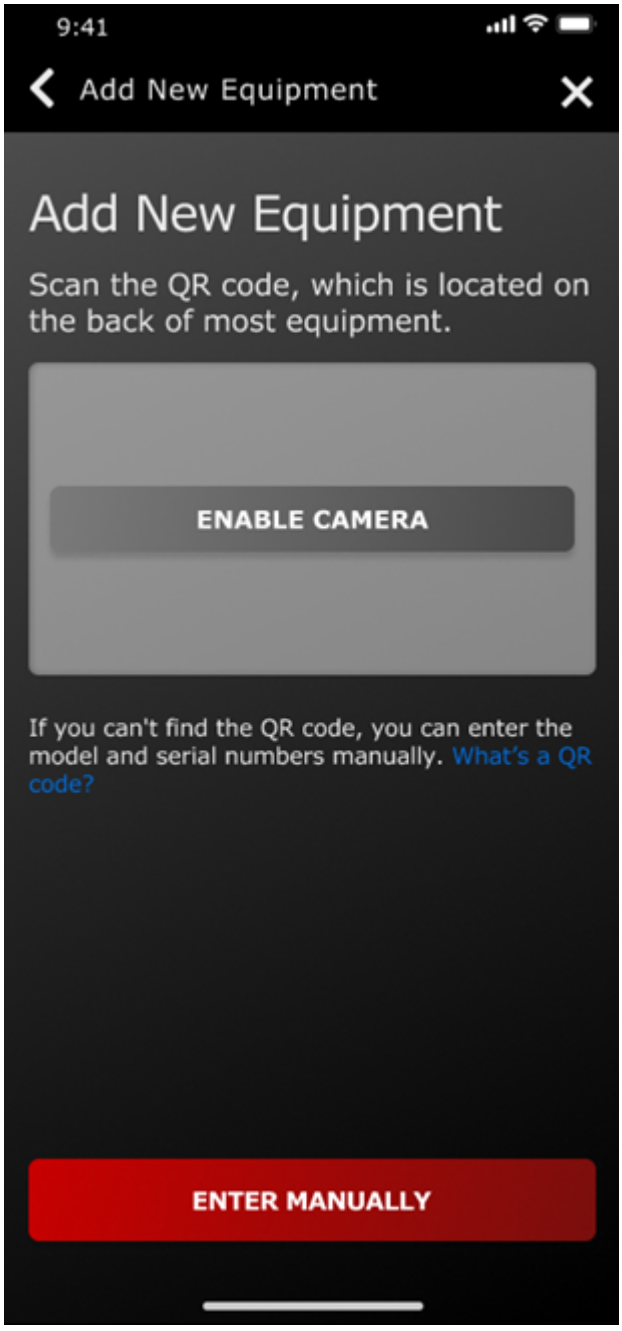

G445465

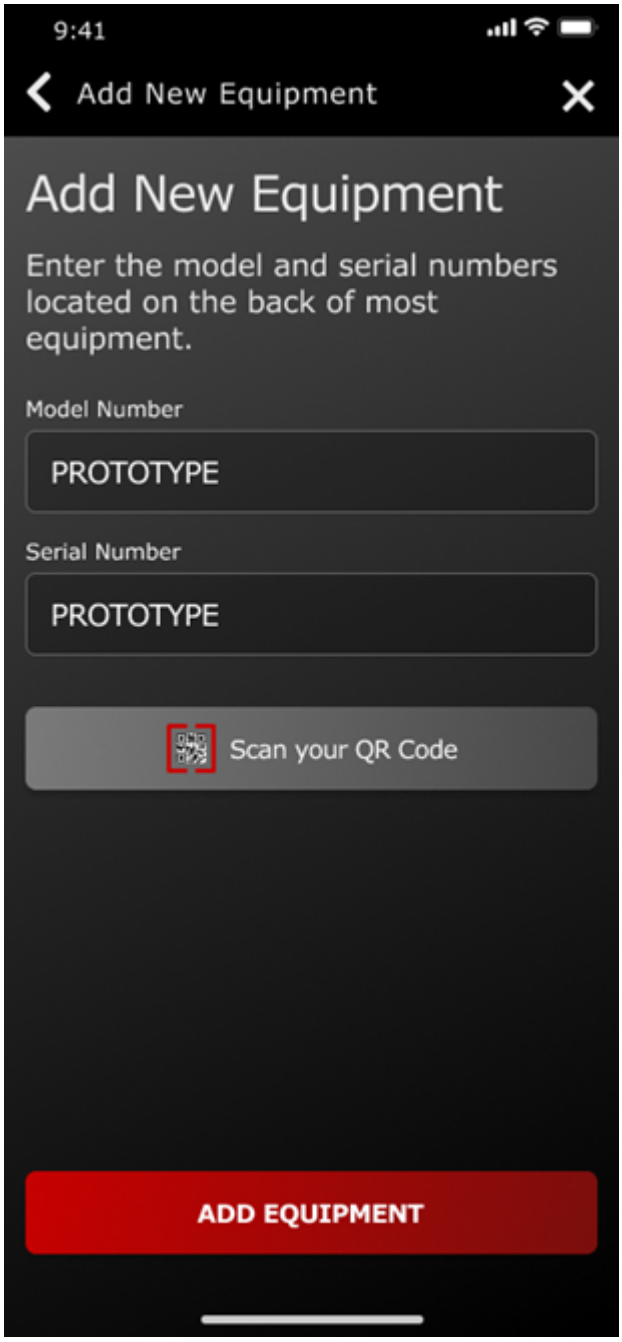
9:41
Add New Equipment
Add New Equipment
Enter the model and serial numbers located on the back of most equipment.
Model Number
PROTOTYPE
Serial Number
PROTOTYPE
Scan your QR Code
ADD EQUIPMENT

G445467

5. Scan the QR code ① located on your mower or manually enter the information with your phone.

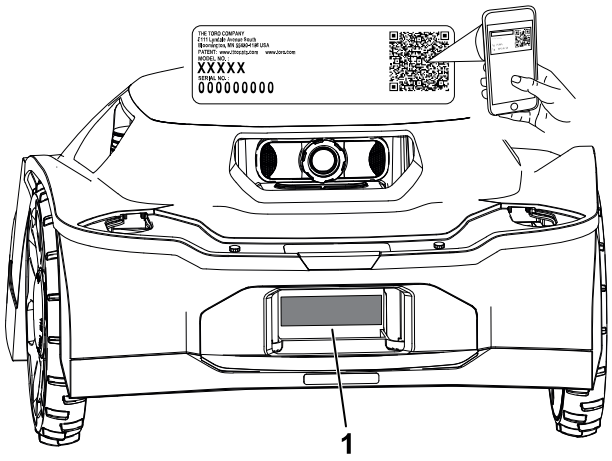

G489469

6. Confirm the model number and serial number and enter the purchase date.

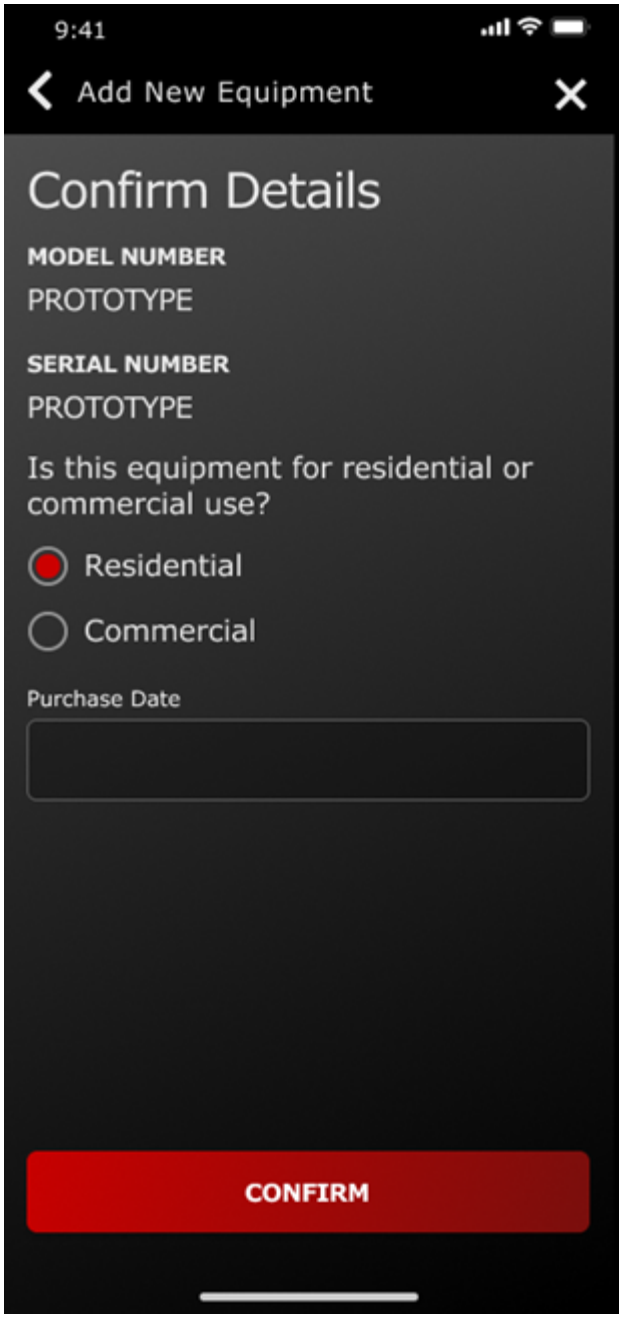

G445464

7. Enter your personal information and tap **Register**.

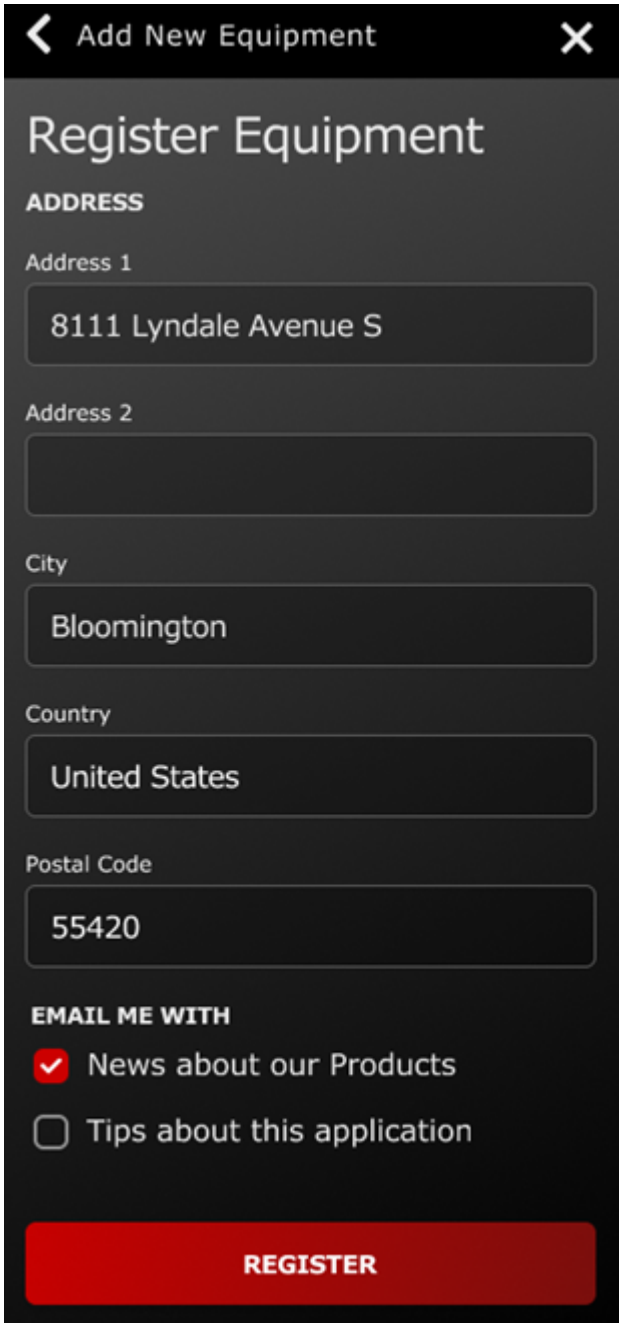

G445466

Connecting the Hub

Parts Required

1	Hub
1	Ethernet cable
1	Power cord
1	Antenna

1. Insert the antenna into the coaxial terminal.
2. Rotate the antenna clockwise until it is tight.
3. Insert the Ethernet cable into the LAN terminal.
4. Insert the power cord into the 5V—1A terminal.

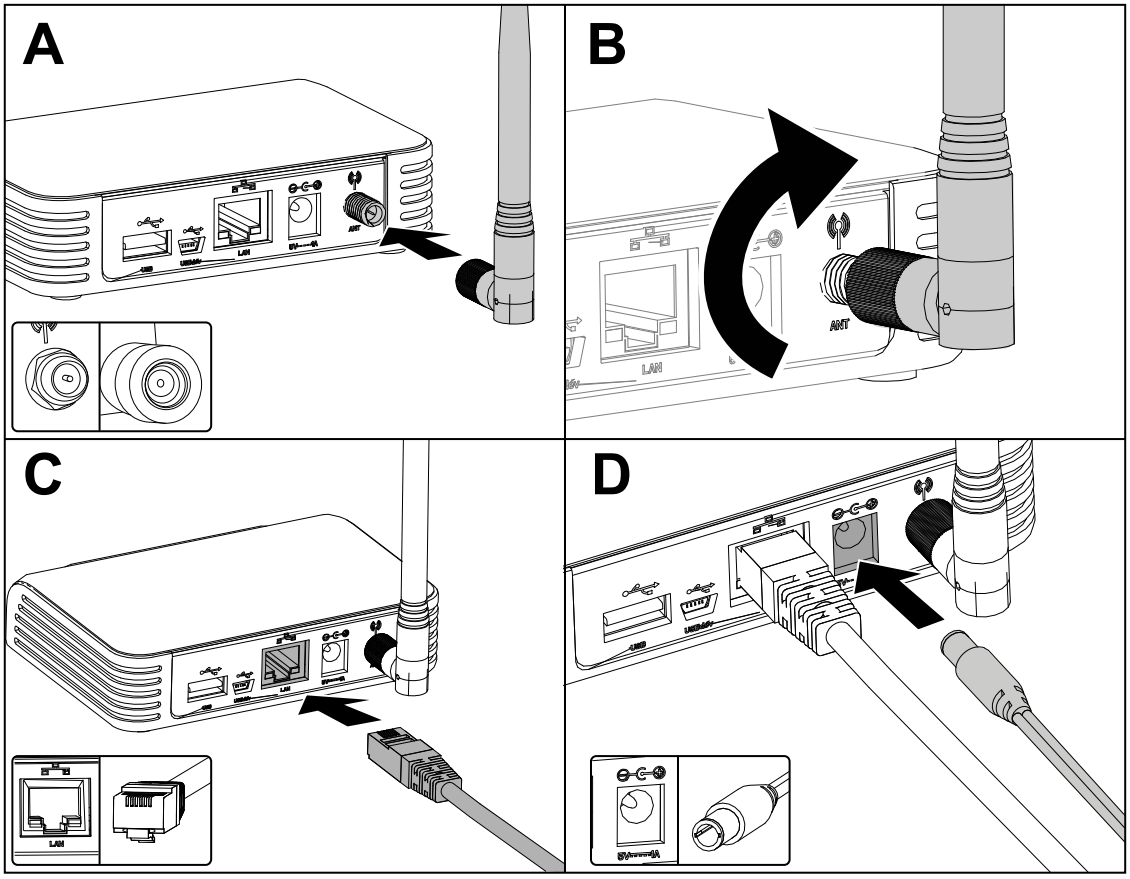

G473652

5. Plug the power cord brick into an electrical outlet.
6. Plug the hub into the router and it will automatically connect to the internet. When the globe symbol on the hub turns solid green, the hub is connected.

Note: This process may take a few minutes.

You do not need Wi-Fi passwords or network permissions.

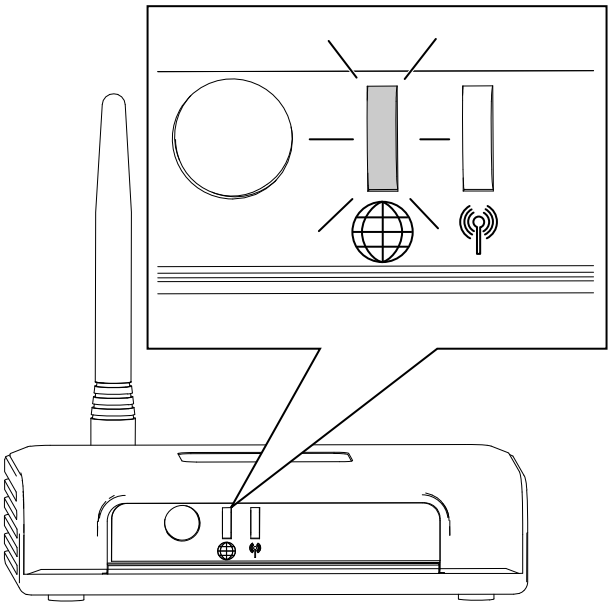

Determining a Location for the Charging Station

Refer to the following guidelines when choosing a location for the charging station:

- Place it near an outdoor electrical outlet.
- Do not use an extension cord.
- Ensure that the charging station is within 0.5 m (1.6 ft) of a mowing zone boundary and there is room for the mower to navigate in front of the charging station.

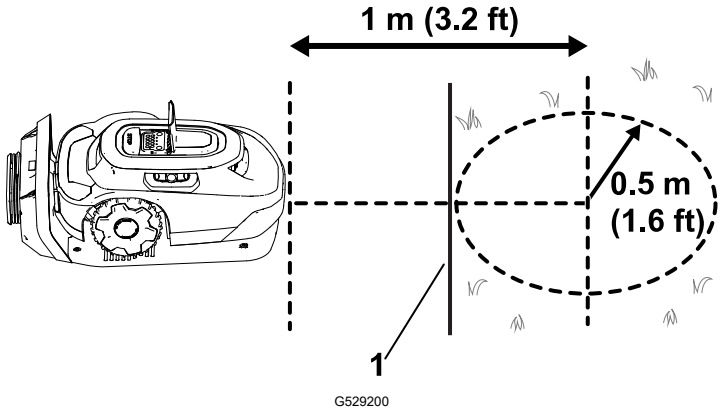

1 Mowing zone boundary

- Do not install the charging station in an area prone to standing or rushing water.
- Do not install the charging station on a deck or any other inaccessible area.
- Ensure there at least 2 reference objects within 20 m (65 ft) of the charging station. Walls of a house or garage are valid reference objects.

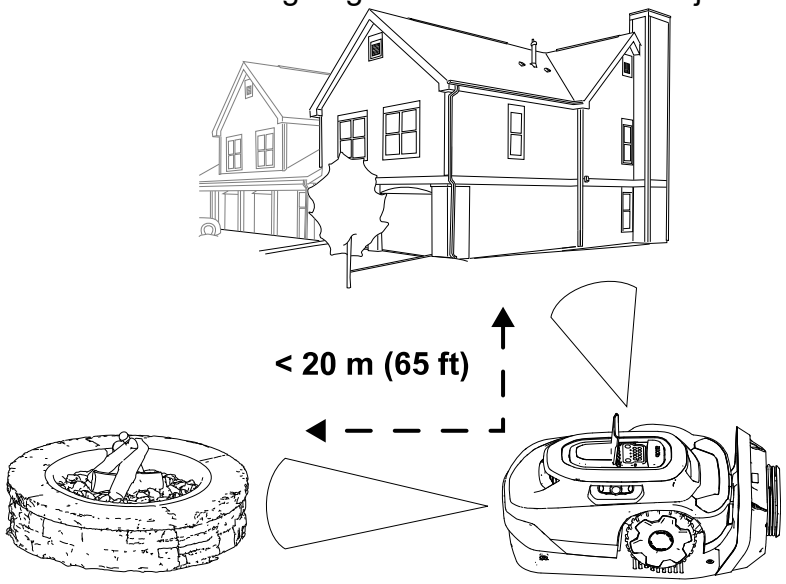

- Install the charging station on a level surface; do not install on a steep slope, as it could bend the charging station.

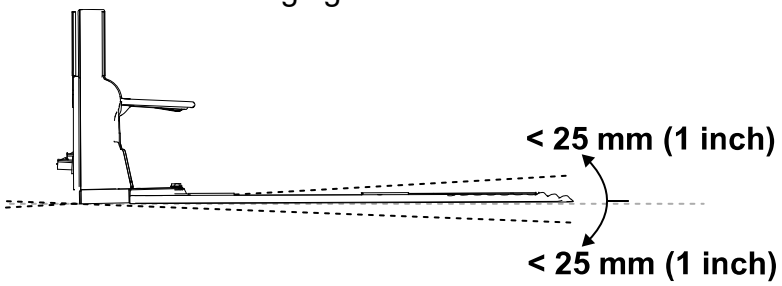

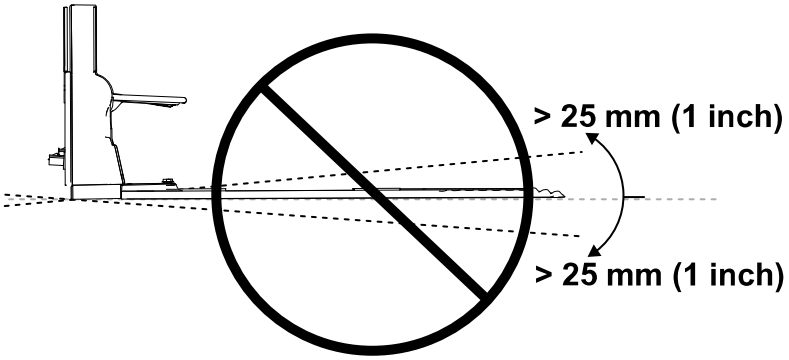

- The charging station can be installed on a variety of surfaces, but the end of the charging station must be in contact with your lawn.

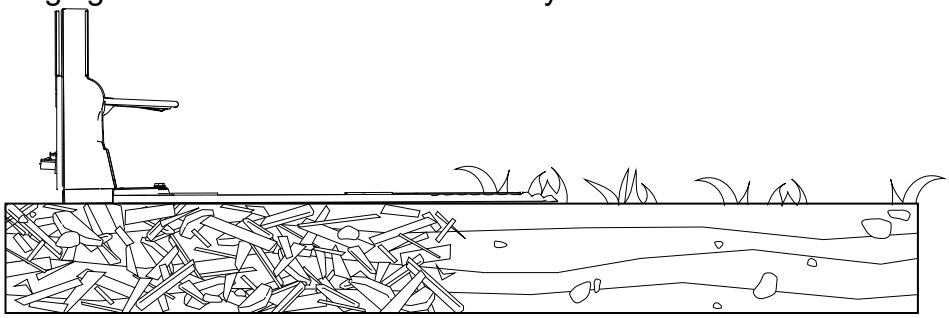

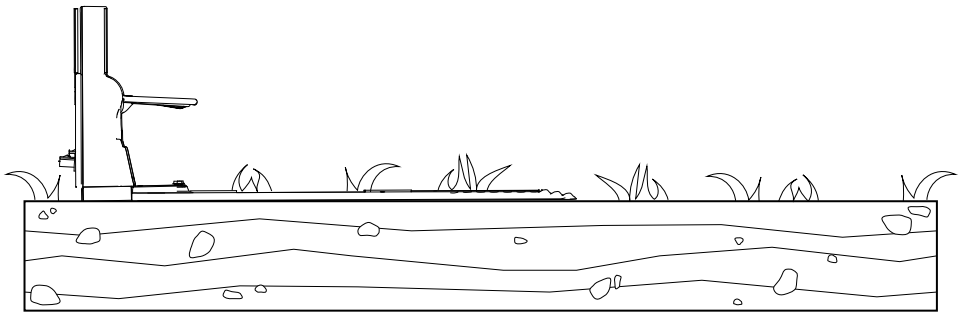

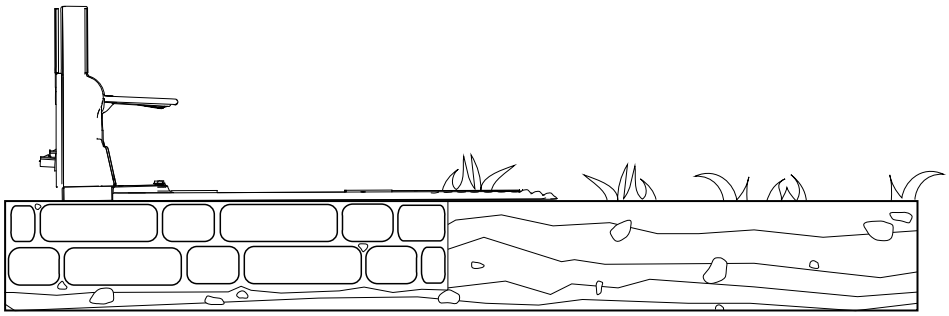

Installing the Power Supply and Charging Station

Parts Required

1	Power supply
1	Low-voltage cable
1	Charging station
4	Allen-head screw

⚠ WARNING ⚠

A power supply plugged into a non-GFCI or non-RCD receptacle could result in electric shock.

Plug the power supply into only a ground-fault circuit interrupter (GFCI) or residual-current device (RCD) receptacle with a tripping current not more than 30 mA.

⚠ WARNING ⚠

A malfunctioning or damaged charging station, low-voltage cable, or power supply could overheat and cause an increased risk of fire.

Do not install the charging station, low-voltage cable, or power supply near flammable or combustible materials.

If the power supply to the charging station is malfunctioning or damaged, disconnect the power supply, and contact an Authorized Service Dealer to replace it.

IMPORTANT

Check to ensure compliance with all codes and regulation before mounting the power supply.

Mounting the power supply may require additional materials and/or hardware, depending on the type of base material present at your chosen mounting location.

IMPORTANT

Route the power cord to the charging station outside of the mowing area; otherwise, the mower may damage the cord.

1. Mount the power supply to your structure at a minimum height of 30 cm (12 inches).

   Note: Ensure that the power-supply cord has enough slack to plug into the low-voltage cable.

2. Plug the male connector ① on the power supply into the female connector ② on the low-voltage cable.

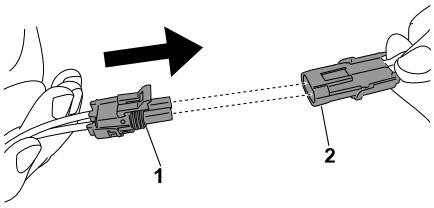

G430557

3. Use the 4 Allen-head screws to secure the charging station.

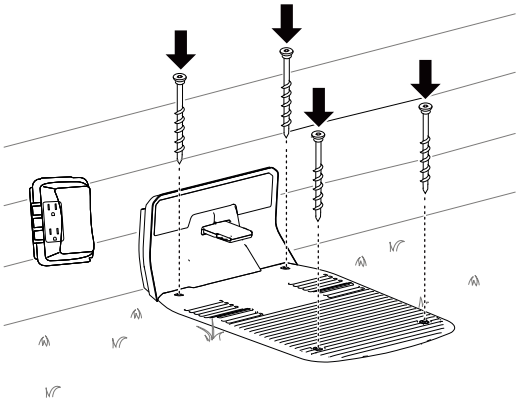

G490295

4. Plug the power supply into an electrical outlet.

   The indicator light on the charging station should turn green.

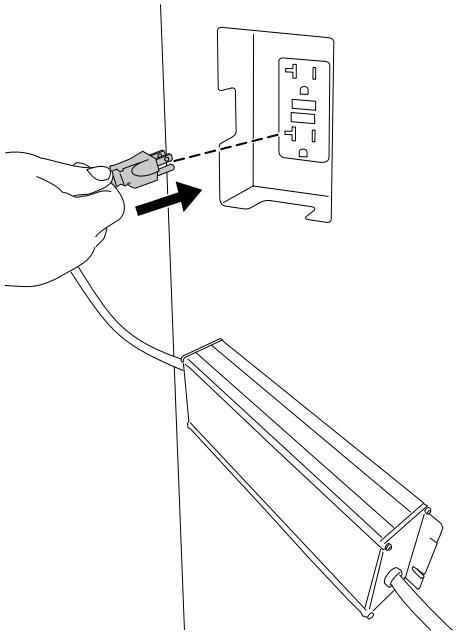

G490294

Preparing the Lawn Before Using the Robotic Mower

To prepare the lawn before using the robotic mower, do the following:

- Clear any obstructions and/or debris from your lawn.
- Before training your robotic mower, mow the lawn to a height of 83 mm (3.25 inches).
- Fill in any holes in the lawn that could stop the mower.
- To ease the setup process using the app, make a sketch of the mowing zone and all obstacles, boundaries, transit paths, exclusion zones to make it easier to install the charging station.

Ideal Conditions for Setting up the Mower

Cloudy days during the middle of the day are ideal conditions for setting up your mower. Ensure that you start the setup process 3 hours after sunrise and you complete the process 3 hours before sunset. These conditions allow the mower to make a high-quality map of your lawn.

Note: You can always resume setting up the mower the next day if you don’t complete the setup process.

Starting and Charging the Mower

1. To start setting up the mower, turn the power switch from the OFF position ② to the ON ① position.
2. Pull the mower into the charging station.

The mower comes with an approximately 30% battery charge. Before you can start the setup process using the mobile app, you need to charge the mower to **at least 85%**.

3. After reaching the proper charge level, use the mobile app to start the mower.

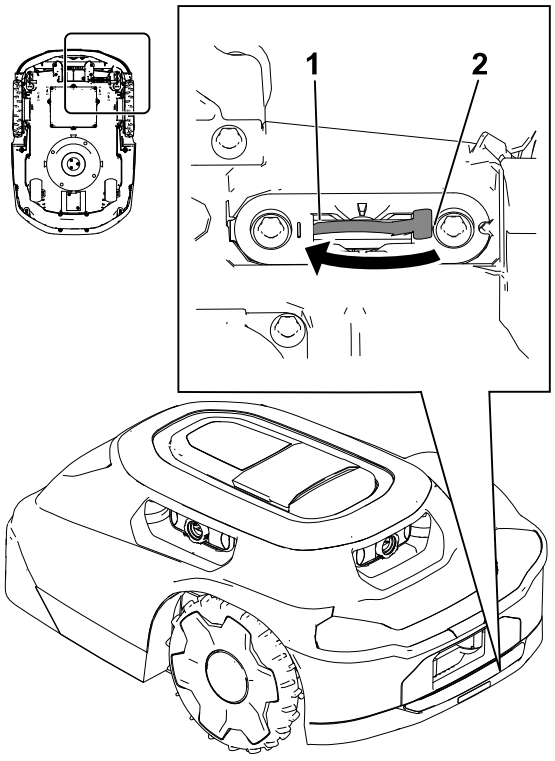

G530548

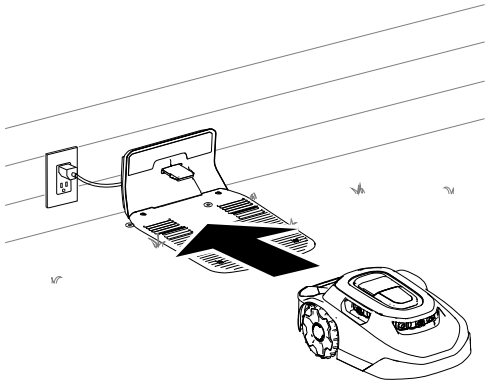

G430093

Installing the Mower Handle

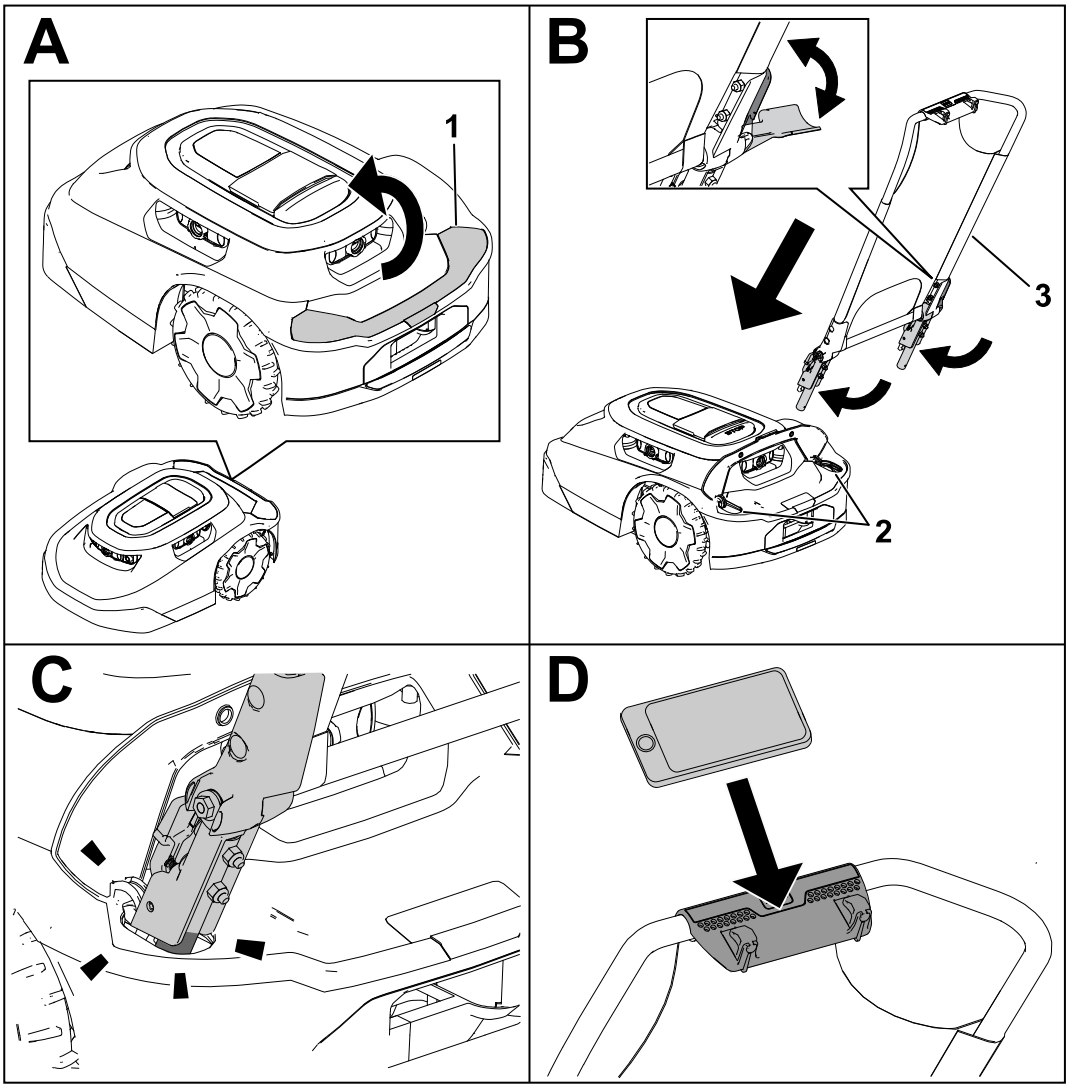

G530208

1 Lift the cover.

2 Openings for the handle

3 Handle assembly

Removing the Mower Handle and Storing it in the Charging Station

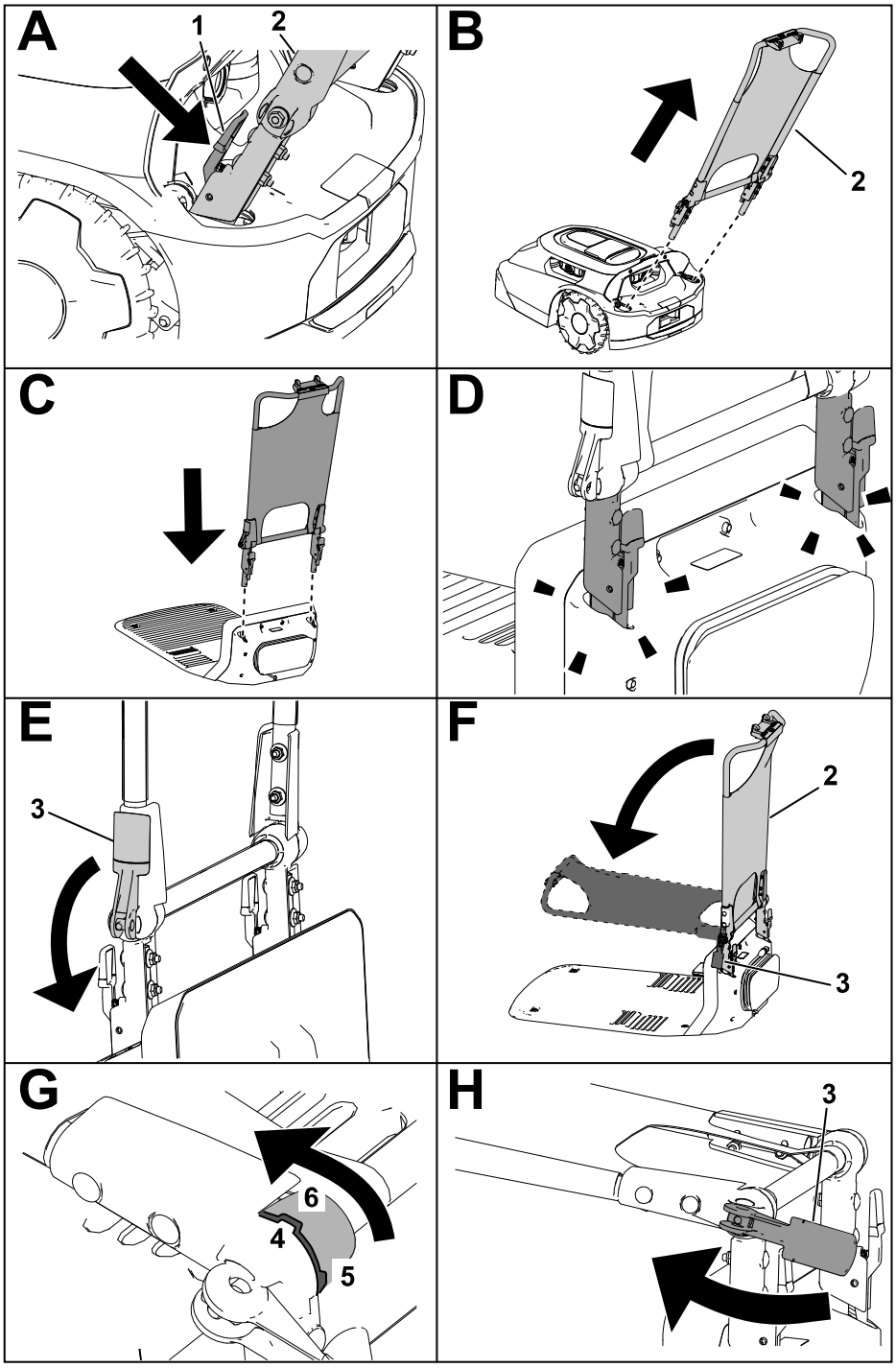

G430160

1. Squeeze the release levers inward.
2. Handle assembly
3. Cam lever
4. Notch in the handle assembly
5. Upright/vertical notch position
6. Sunshade/horizontal notch position

Operation Safety

- Keep bystanders and children away from the machine, charging station, and power supply during operation.
- Wear appropriate clothing, including long pants and substantial, slip-resistant footwear, whenever you manually operate the machine.
- Do not operate the machine without all safety protective devices in place and working properly or if a power cord is damaged or worn.
- Inspect the area where you will use the machine and remove all objects that could interfere with the operation of the machine.
- Use only the battery and power supply approved by the manufacturer for the machine. Do not use any battery that is not designed for use with the machine.
- Do not use a damaged or modified battery, which may exhibit unpredictable behavior that results in fire, explosion, or risk of injury.
- The blades are sharp; contacting the blades can result in serious personal injury. Press the stop button and wait for all moving parts to stop before unclogging, servicing, or transporting the machine.
- Keep your hands and feet away from moving parts on and under the machine.
- Do not overreach. Keep proper footing and balance at all times. This enables better control of the machine in unexpected situations. Walk, never run when training the machine.
- Do not stand, sit, or ride on the machine or allow others to do so.
- If the machine strikes an object and/or starts to vibrate abnormally, immediately shut off the machine and wait for all movement to stop before examining the machine for damage. Make all necessary repairs before resuming operation.
- Press the stop button on the machine, wait for all movement to stop, and disable the machine in the following situations:
  - Before clearing blockages on the machine
  - Before checking, cleaning, or maintaining the machine (especially the blades), and the charging station
  - After the machine strikes a foreign object, is in an accident, or breaks down; examine the machine for damage and make repairs before resuming operation
  - If the machine begins to vibrate abnormally; examine the machine for damage and make repairs before resuming operation
- Avoid using the machine and its peripherals in bad weather conditions especially when there is risk of lightning.
- Do not place any object on either the machine, charging station, or power supply.

- Do not modify the machine, software, charging station, hub, or power supply.
- Do not modify or override the machine controls, safety devices, or power supply.
- Do not use a modified machine, charging station, or power supply.
- We recommend not using the machine while watering or irrigating the operating area.
- Use only accessories approved by Toro to avoid the risk of fire, electric shock, or injury.
- Press the stop button on the machine and wait for the blades to come to a complete stop before handling the machine. Carry the machine with the blade(s) away from your body.

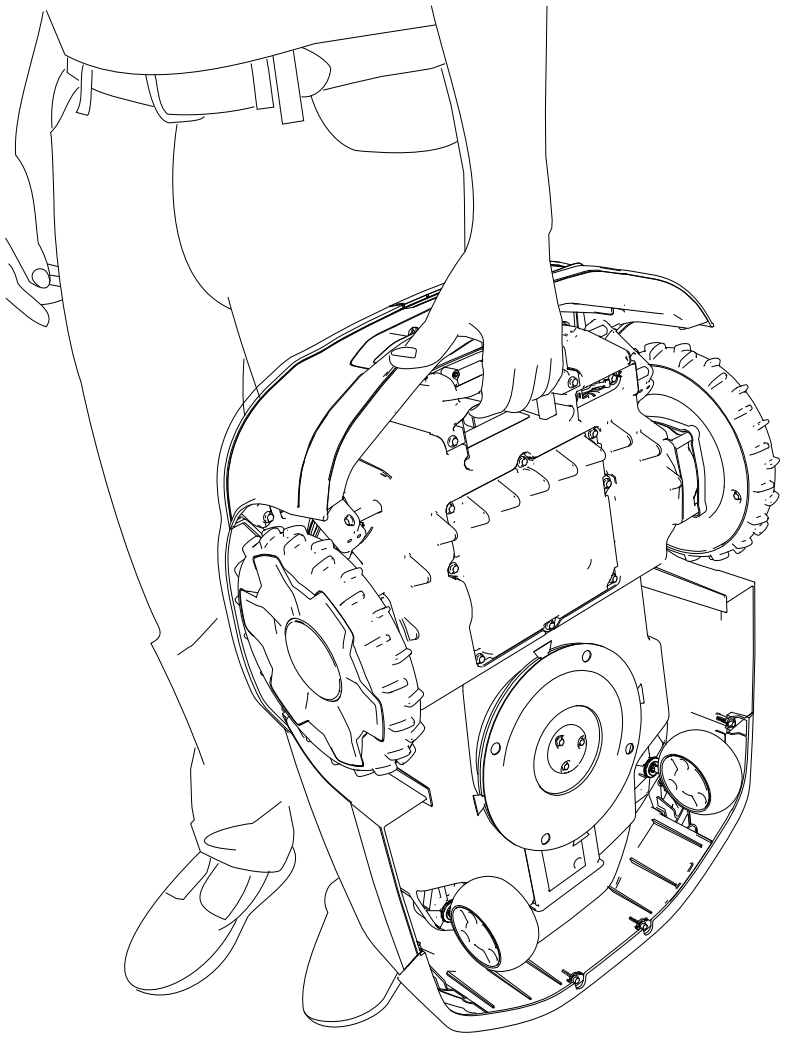

G430092

- Do not use or charge a damaged, deformed, or excessively hot battery. A damaged battery may generate heat, rupture, leak, ignite, or explode.
- Use the battery only for the application for which it was intended.
- The battery could emit explosive gasses if it is significantly overcharged.
- Do not subject the battery to mechanical shock.

- Do not use or operate a damaged or improperly functioning charging station or power supply.
- Do not plug the charging station or the power supply into a power strip or an extension cord.
- Do not operate a charging station or power supply that has received a sharp or heavy blow.
- Do not use a charging station other than that designed for the machine; refer to the *Operator's Manual* for proper charging instructions.
- Do not connect a damaged power supply cord. Do not touch a live damaged cord.

Trimming Areas of the Lawn that the Robotic Mower Cannot Access

The mower blades do not reach the edge of the mower shroud, so you need to trim at least 10 cm (4 inches) of uncut grass periodically.

Examples of areas that you need to trim include the following:

- Between the lawn and a fence, driveway, sidewalk, etc.
- Around a tree, fire pit, etc.

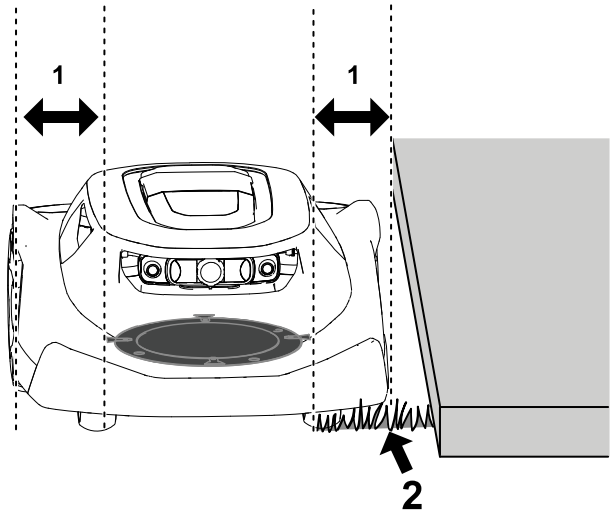

G474711

(1) Gap between the blade disc and the edge of the mower shroud—10 cm (4 inches)

(2) Uncut grass

Repositioning the Mower if it is Stuck on an Obstacle

Note: If possible, remove the obstacle (fill the hole, remove the toy, branch, etc.). If you cannot remove the obstacle, create an exclusion zone around the obstacle to prevent this from recurring.

If the mower gets stuck on an obstacle, do the following:

1. Press the stop button on the mower.
2. While carrying the mower with the blades away from your body, manually move the mower away from the obstacle to another part of the mowing zone.

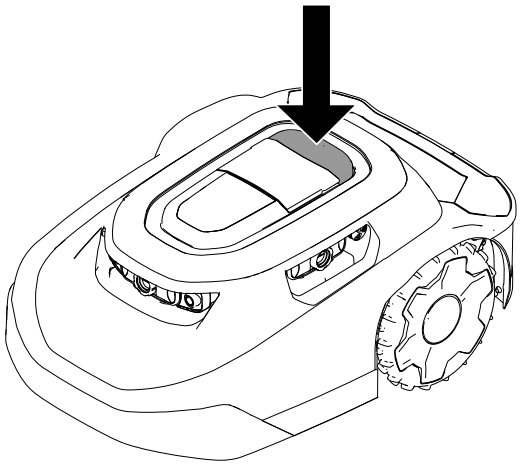

G469079

3. Enter the 4-digit code (1).
4. Press the play button (3) to resume mowing or press the home button (2) to send the mower to the charging station.

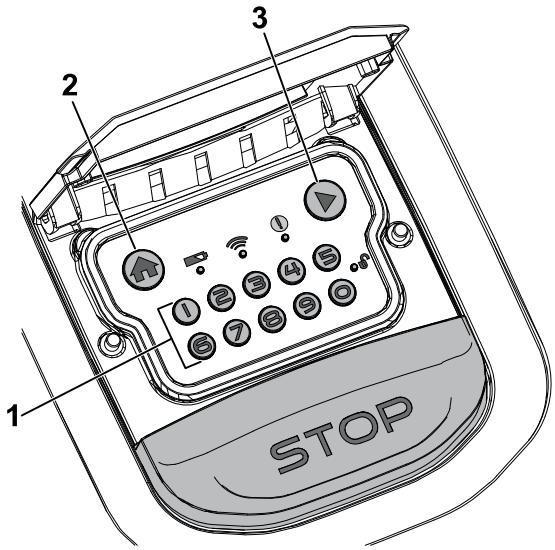

G530441

Manually Stopping and Starting the Mower

When you manually stop the mower, autonomous features are disabled. Enter the 4-digit code to enable the mower.

1. Press the stop button on the mower.
2. Enter the 4-digit code.
3. Press the play button to resume mowing or press the home button to send the mower to the charging station.

Docking and Charging the Mower

With the mower enabled, press the home button on the control panel to manually send the mower to the charging station.
The mower will remain in the charging station until it is fully charged or until the next scheduled mowing task.

Note: The mower automatically docks in the charging station if the battery is too low.

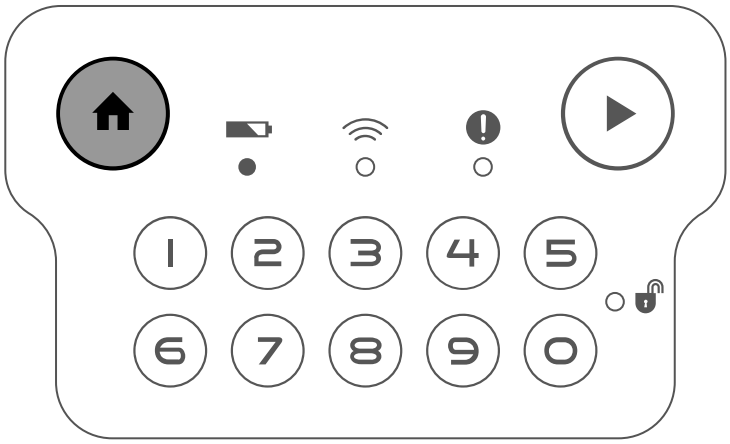

G431603

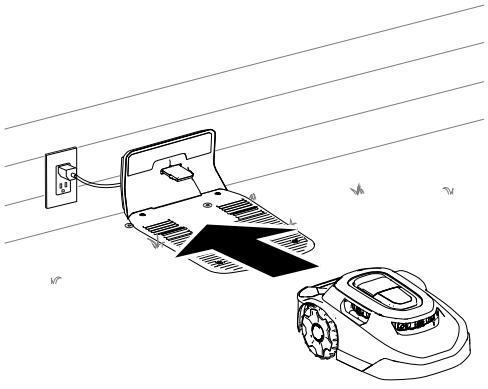

G430093

Installing an Optional Anti-Theft Device

Note: An anti-theft device is not included with the robotic mower. However, the mower automatically makes an alarm noise if it is removed from the working area or if it is carried without entering the PIN code.

Anti-theft devices are available for purchase separately.

1. Remove the screws from the cover.
2. Place the anti-theft device ① on the foam pad ②.
3. Secure the cover using the 2 screws previously removed.

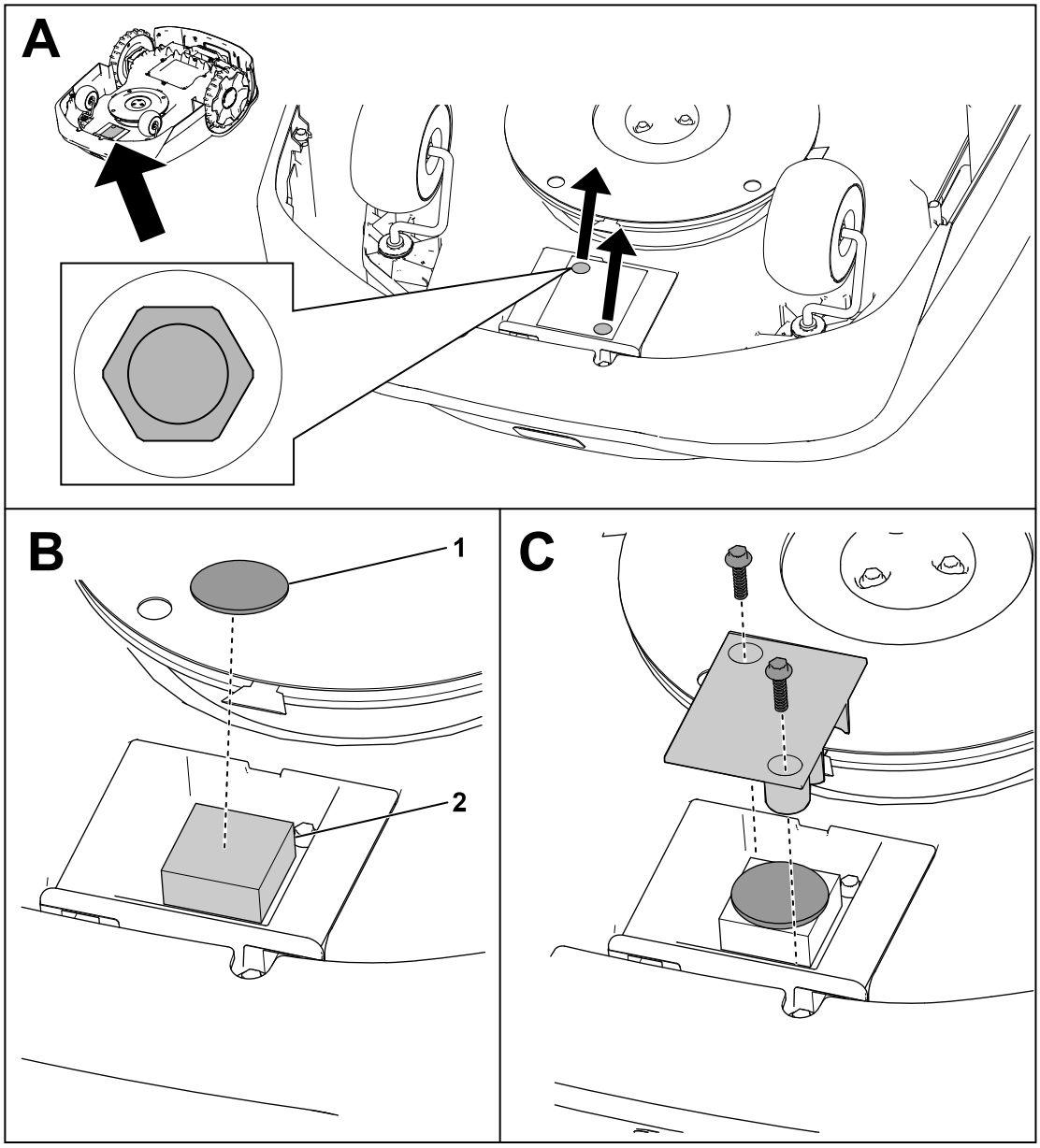

G464079

Recommended Maintenance Schedule

Maintenance Service Interval	Maintenance Procedure	Part No.	Qty	Description
Monthly	Clean the lens protectors (more often in dusty, dirty, or wet conditions).	-	-	-
	Inspect the caster wheels.	163-1920	1	Caster wheel kit
Monthly (every 2 to 4 weeks)	Replace or flip the blades (depends on the frequency of the mowing schedule).	163-1960	1	Blade kit
Every 3 months	Inspect the drive wheels.	-	-	-
Yearly	Replace the lens protectors (more often in dusty, dirty, or wet conditions).	163-1945	1	Lens protector kit
	Inspect the charging port.	-	-	-

Maintenance Safety

- Before servicing the machine, turn the power switch underneath the machine to the OFF position.
- Do not allow children to clean and maintain the machine.
- Keep your hands and feet away from moving parts on and under the machine.
- The blades are sharp; contacting the blades can result in serious personal injury.
  - Shut off the machine.
  - Wear cut-resistant gloves when servicing the blades.
  - Do not repair or alter the blades.
- Inspect the machine often to ensure that the blades are not worn or damaged.
- Maintain or replace safety and instruction labels as needed.
- Disconnect the power supply from the electrical outlet before performing maintenance on or cleaning it to reduce the risk of electric shock.
- Do not attempt to repair, open, or disassemble the charging station or power supply.

- Take the charging station to an Authorized Service Dealer for service or repair. Do not disassemble the charging station.
- For best performance, use only genuine Toro replacement parts and accessories. Other replacement parts and accessories could be dangerous, and could void the product warranty.

Battery and Charging Station Safety

- Clean the charging port on the mower and/or charging station using a nonconductive tool (cloth or soft brush); otherwise, damage may occur.
- Wipe the charging terminals on the charging station and mower using a clean, dry cloth if they are dirty.
- When servicing the battery, do not wear jewelry and tie back long hair.
- Do not dismantle or open the battery.
- Keep the battery clean and dry.
- Do not use or charge the mower if it is unusually hot or emits smoke or an unusual smell.
- Leaking battery fluid can cause skin and eye irritation or chemical burns.
- If the battery leaks, do not allow the liquid inside the battery to contact skin or eyes. If there is contact, wash the affected area with a large amount of water and seek medical advice.
- Use an inert absorbent such as sand to clean up spilled battery fluid.
- Dispose of a used battery properly.
- Do not dispose of the battery in a fire. The cell may explode. Check with local codes for possible special disposal instructions.
- CAUTION—A mistreated battery may present a risk of fire, explosion, or chemical burn.
  - Do not disassemble the battery.
  - Replace the battery with an approved battery only; using another type of battery may cause a fire or risk of injury.
  - Keep battery out of the reach of children.

Servicing the Battery

Disconnecting the Battery

1. Turn the power switch to the OFF position.
2. Use a 7 mm socket to remove the 8 screws and the battery cover.

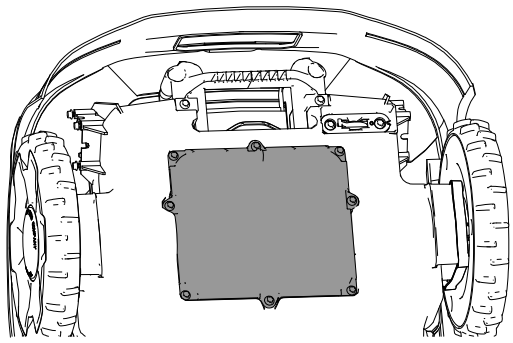

G433890

3. Remove the screws securing the battery.

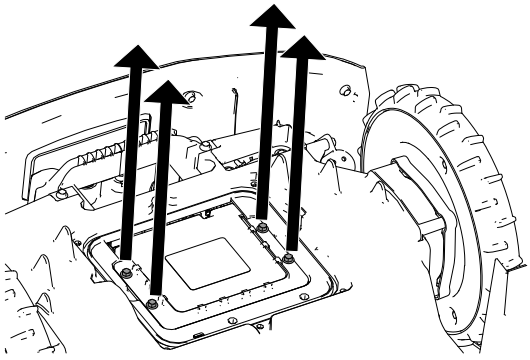

G433889

4. Disconnect the 2 wire-harness connectors from the battery.

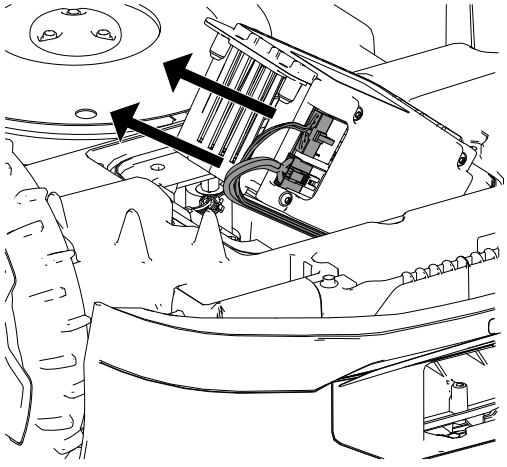

G433983

Connecting the Battery

1. Connect the 2 wire-harness connectors to the battery.
2. Secure the battery using the previously removed screws.
3. Install the battery cover.
4. Turn the power switch to the ON position.
5. Place the mower in the charging station to charge.

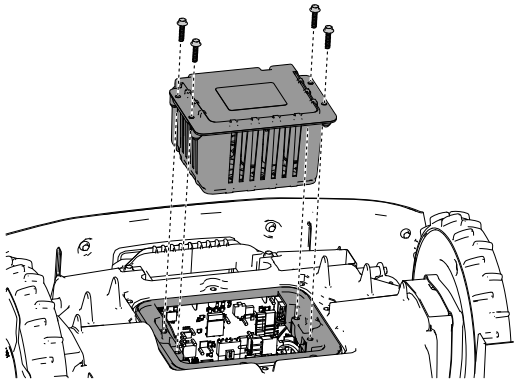

G433995

Replacing the Wheels

Removing the Wheels

1. Press the stop button and wait for all moving parts to stop.
2. Using a flat-head screwdriver (1), remove the cap (2) from the wheel (4).
3. Remove the 3 bolts (3).
4. Remove the wheel (4).

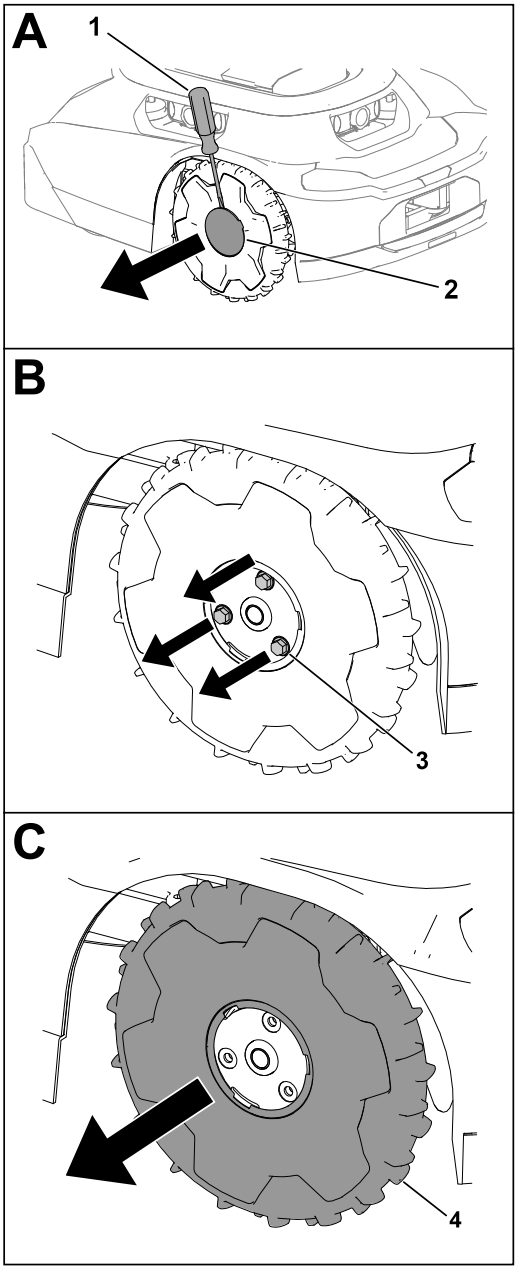

G430568.svg

Installing the Wheels

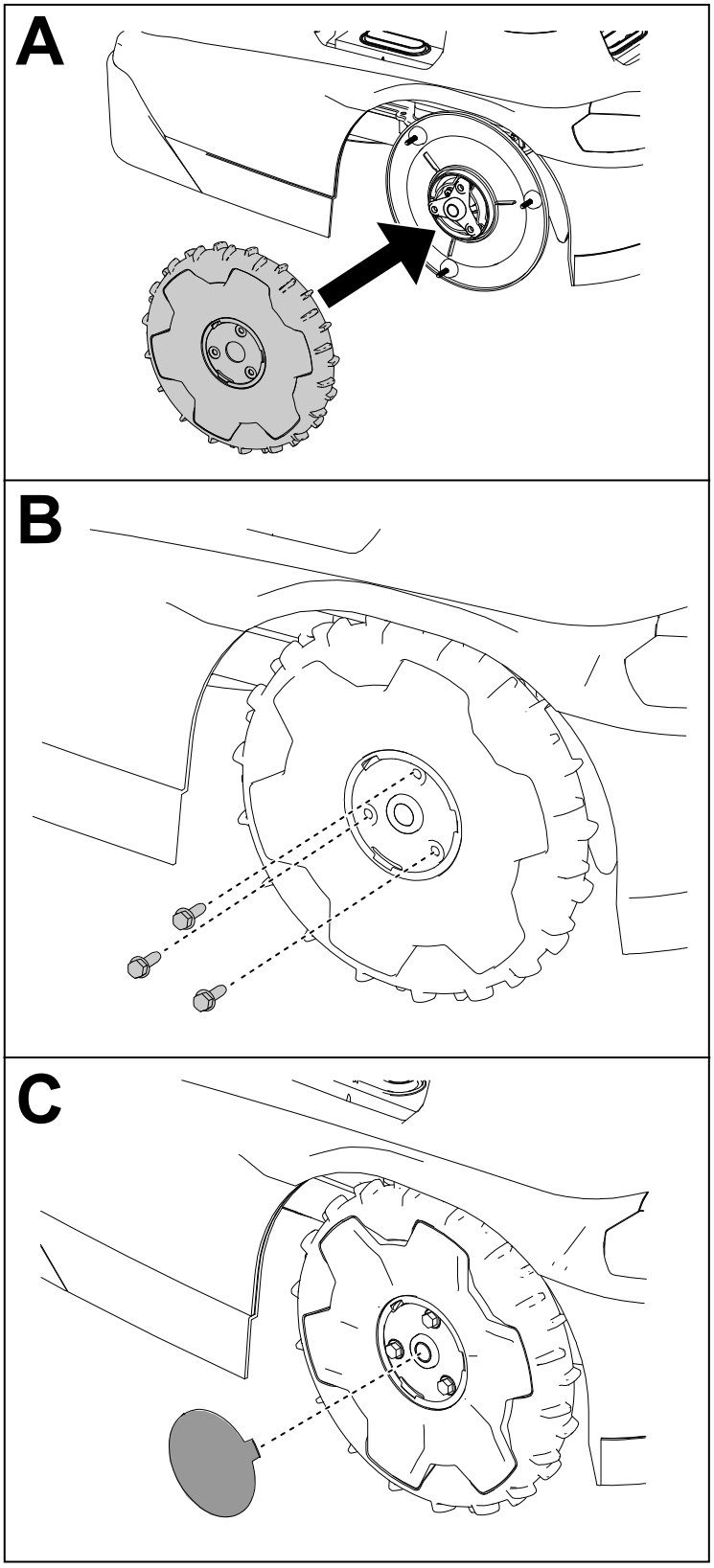

G430569

Replacing the Blades

Always mow with sharp blades. Sharp blades cut cleanly without tearing or shredding the grass.

⚠ WARNING ⚠

The blades are sharp; contacting the blades could result in serious personal injury.

Wear cut-resistant gloves and use care when replacing or cleaning the blades.

---

1. Turn the power switch to the OFF position.
2. Tip the mower over.
3. Rotate the blade disc until the holes on the blade disc align with the screws.
4. Using a Phillips-head screwdriver, remove the blade screws and blades.
5. Clean any debris from cutting system.
6. If the service interval is reached for a set of blades for the first time, you may flip the blades over and install them to the mower again using the existing screws.

   Note: Both sides of the blades have sharp edges that can be used for mowing. One set of blades should only be flipped over once.
7. If installing new blades or both sides of the blades have been used, install the blades using the provided screws.

   Note: Discard the existing blades and screws after using both sides of the blades, or if the blades are damaged.
8. Turn the mower over.
9. Turn the power switch to the ON position.
10. Press the play (resume operation) button on the control panel.

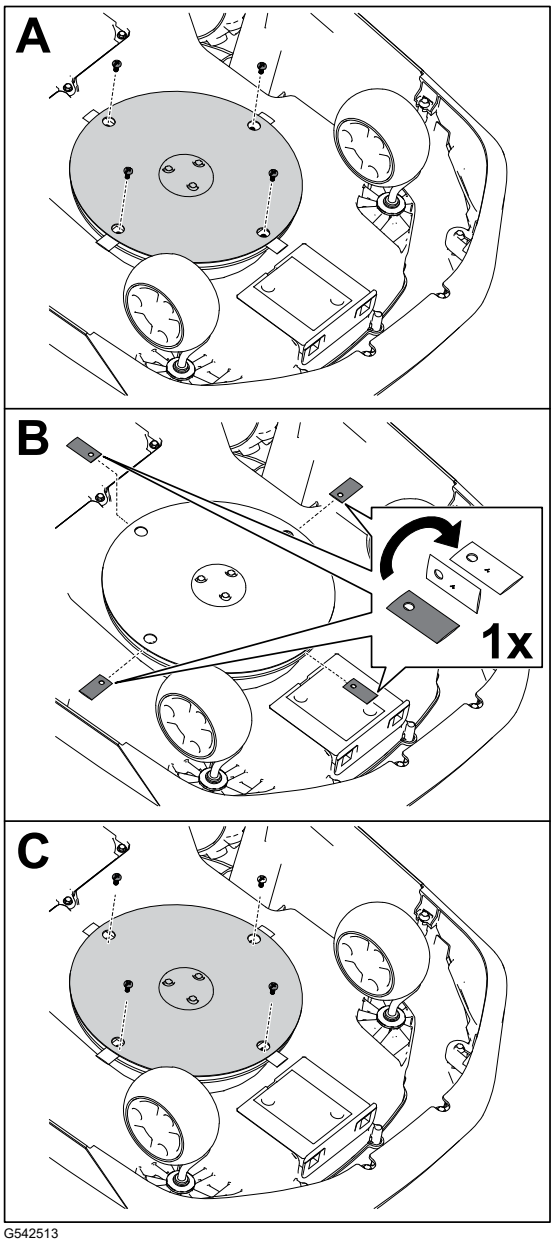

G542513

Cleaning

Cleaning the Mower and Charging Station

IMPORTANT

Do not pressure-wash the mower; the water can damage the electronics.

Use compressed air when cleaning the mower.

IMPORTANT

Clean the charging port on the mower and/or charging station using a non-conductive tool (cloth or soft brush); otherwise, damage may occur.

⚠ CAUTION ⚠

If metal objects contact the positive and negative posts at the same time, this could short out the battery pack. The battery pack or conductor could overheat and burn you, resulting in minor or moderate injury.

Do not use metal objects to clean around the battery.

1. Turn the mower power switch to the OFF position and wait for all moving parts to stop.
2. Unplug the power supply for the charging station.
3. Turn the mower over.
4. Clean any debris or grass build-up on the caster wheels (1) and drive wheels (3).
5. Use a wet cloth or a soft brush to remove grass clippings and debris from the mower housing (2).

   Ensure that there are not any obstructions in the top side of the mower (e.g., a stick that got stuck or debris buildup).

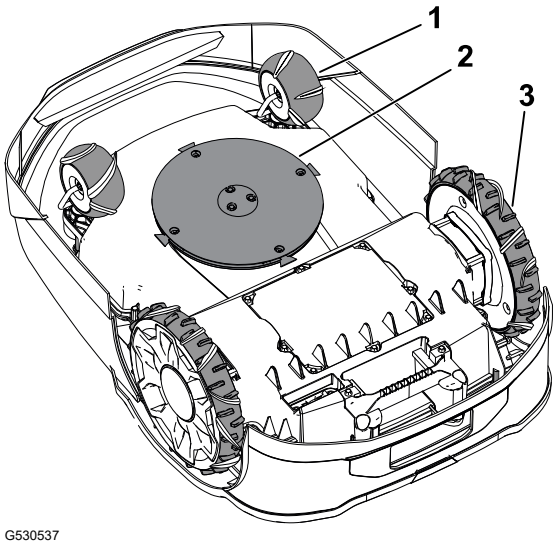

G530537

Cleaning the Mower and Charging Station (continued)

6. Use a dry cloth or non-conductive soft brush to clean the mower charging port (4).

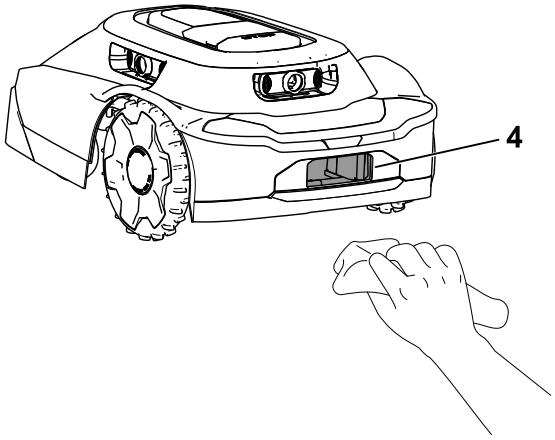

G530536

7. Use a dry cloth or non-conductive soft brush to clean the charging station terminals (5).
8. Turn the mower over.
9. Turn the mower power switch to the ON position.
10. Plug in the power supply for the charging station.

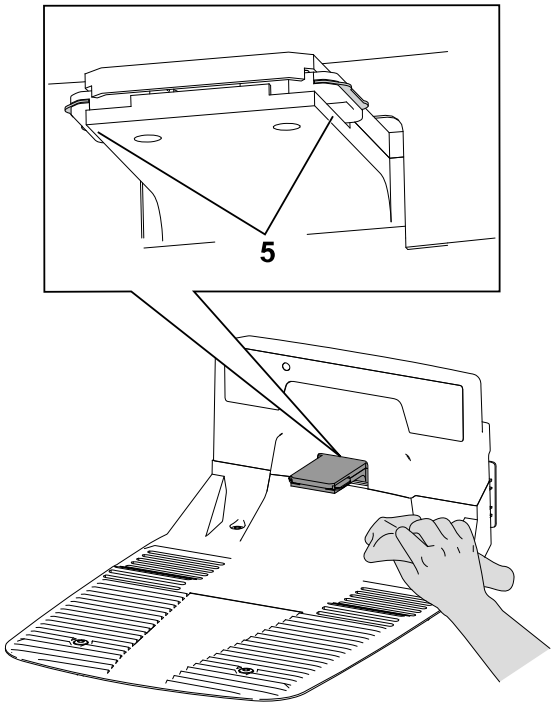

G530462

Cleaning or Replacing the Lens Protectors

Clean the lens protectors using a dry soft-bristle brush and/or a clean microfiber cloth.

Refer to the figure below for the lens locations and how to replace the lens protectors.

Replace the lens protectors ① by unscrewing the lens caps ② and removing the lens protectors.

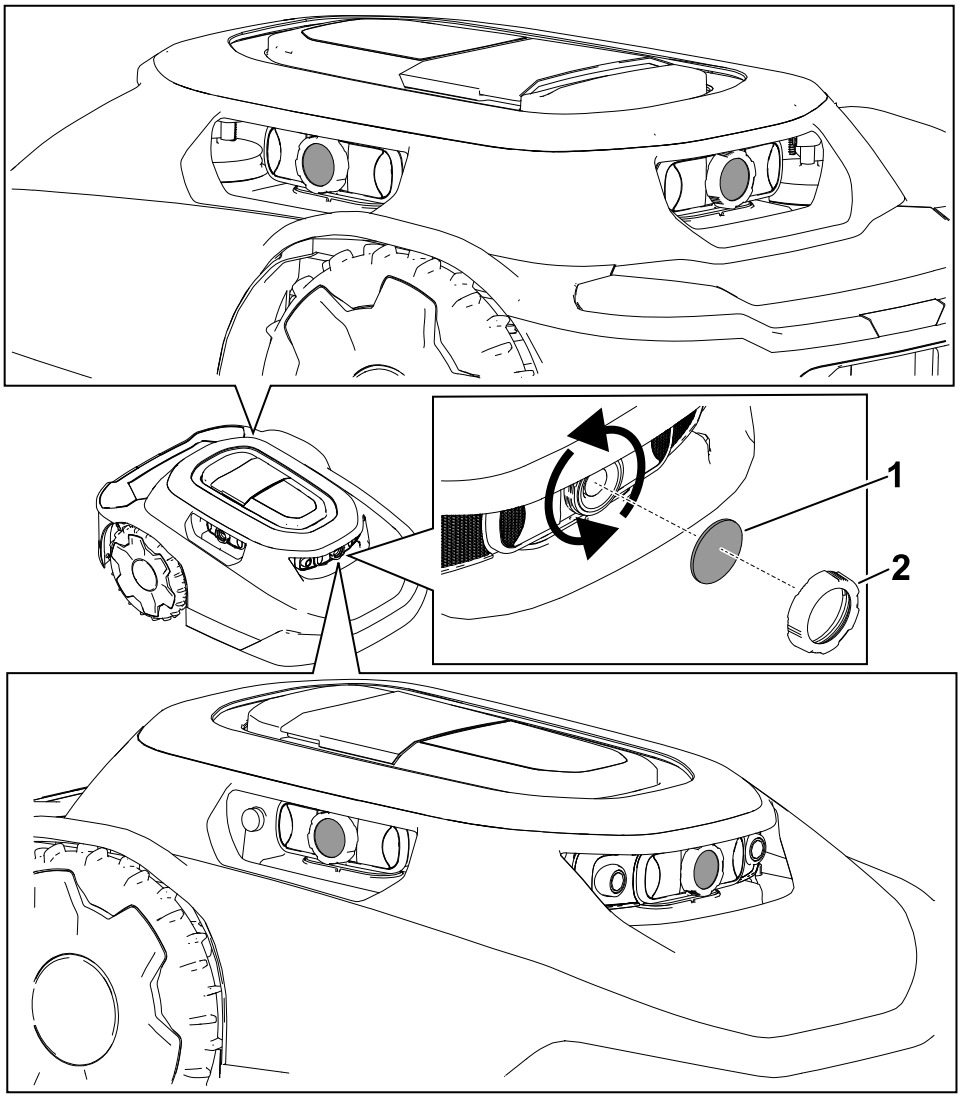

Disposing of Waste

Batteries are pollutants to the environment. Dispose of these according to your state and local regulations.

Storage Safety

When you are not using the mower, store it indoors in a dry, secure place out of the reach of children or other unauthorized users.

Preparing for Off-Season Storage

⚠ WARNING ⚠

Improperly storing the mower and its battery may result in an increased risk of fire and/or electric shock; this may cause personal injury and/or property damage.

- **Disconnect and remove the battery from the mower before storing the mower and/or its battery inside your home.**
- **Follow the instructions for properly storing the mower.**

IMPORTANT

Store the mower in a cool (0°C to 23°C/32°F to 73°F), dry location (< 65% relative humidity) that is free of excessive dust and corrosive chemicals or gasses.

The temperature that the battery is stored at will affect its long-term life. Storage for long periods of time at extreme temperatures will reduce the battery life.

IMPORTANT

Store the mower, power supply, and charging station out of the reach of children, away from corrosive agents such as garden chemicals and de-icing salts, and away from extended exposure to snow and ice. Store the mower, power supply, and charging station in a cool, dry place when the mower will not be used for more than a month.

1. Fully charge the mower.
2. Press the stop button on the mower.
3. Remove the mower from the charging station.
4. Turn the power switch to the OFF position.
5. Disconnect and remove the battery from the mower.
6. Clean the mower housing using a cloth or soft brush and remove grass clippings, dirt, and grime from external parts of the shroud and from the top of the mower housing.
7. To prepare the mower for the next season, check the condition of the blades; if necessary, replace the blades.
8. Before storing the charging station indoors, disconnect the power supply and low-voltage cable from the charging station.

Troubleshooting

The mower does not start a mowing cycle.

Possible Cause	Corrective Action
The on/off switch underneath the mower is in the OFF position.	Push the on/off switch to the ON position.
The handle is still installed in the mower.	Remove the handle from the mower and stow the handle in the charging station.
The mower is stuck on an object.	Move the mower away from the object.
The mower is pushed up against an object.	Move the mower away from the object.
The mower is on too steep of an incline.	Place the mower on an incline of 25° or less.
The mower is locked.	If the lock/unlock indicator light is illuminated on the control panel, enter your PIN on the keypad, then press the play (resume operation) button or the home button.

Mower impacts object, will not change direction.

Possible Cause	Corrective Action
There is an obstruction between the shroud and the chassis.	Remove the obstruction between the shroud and the chassis.

The mower will not move.

Possible Cause	Corrective Action
There is mud or grass built up on the drive wheels.	Clear the mud or grass from the drive wheels until the tread on the drive wheels are exposed.

The charging station has no power.

Possible Cause	Corrective Action
There is no power at the house outlet.	Reset the house breaker. The LED light on the charging station will illuminate when power is restored.
The power supply is not plugged into the house outlet.	Plug the power supply into the house outlet. The LED light on the charging station will illuminate when power is restored.
The connection between the power supply and the charging station is not connected.	Connect the power supply to the charging station. The LED light on the charging station will illuminate when power is restored.

A caster wheel is not functioning properly.

Possible Cause	Corrective Action
The caster wheel is not pivoting or rolling.	Clean the caster wheel and metal pivot.
The caster wheel bearing is damaged.	Inspect the bearings for wear and ensure that they rotate freely. Replace the bearing, if needed.

The mower is not cutting evenly.

Possible Cause	Corrective Action
The cutting blades are dull.	Replace the 4 cutting blades.

There is no Bluetooth® connection between the mower and phone.

Possible Cause	Corrective Action
The Bluetooth function on your phone is turned off.	Turn on the Bluetooth function on your phone.
Your phone is not connected to the mower.	1. Open the settings on your phone. 2. Refresh the connected devices list on your phone and ensure that your phone is connected to the hub/mower. 3. If your phone is not connected to the hub/mower, pair your phone with the hub/mower.

There is no wireless connection between mower and hub.

Possible Cause	Corrective Action
There is no wireless signal from the Wi-Fi router.	Restart your Wi-Fi router by disconnecting the power cord from the router and reconnecting the power cord. Wait 30 to 60 seconds before reconnecting the power cord.
There is no wireless signal from the hub and the globe symbol on the hub is not illuminated.	Restart your hub by disconnecting the power cord from the hub and reconnecting the power cord. Wait 30 to 60 seconds before reconnecting the power cord.
The mower is outside the property line.	Return the mower to your property.

The mower is not charging.

Possible Cause	Corrective Action
There is an obstruction in the charging station.	Check the charging station for obstructions. Clear any obstructions.
There is an obstruction in the mower charging port.	Check the mower charging port for obstructions. Clear any obstructions.
The charging terminals on the charging station are dirty.	Clean the charging terminals.
The power switch on the mower is in the OFF position.	1. Turn the power switch to the ON position. 2. Ensure that the indicator light on the charging station is green. 3. If the mower is docked in the charging station and the indicator light is red, the magnet could be missing from the mower shroud. Contact an Authorized Service Dealer.

When manually pushing the mower, the handle feels loose.

Possible Cause	Corrective Action
The cam lever on the handle is loose.	Tighten the cam lever.

Chapter 9

Glossary

Advisory

A message that informs the user of an operator error or anything that may cause a job to pause or halt and may require the user to intervene.

App

An abbreviation for software application. A computer program on a mobile device that performs one or more tasks. Also called *application* or *mobile app*.

Autonomous

Automated machine functions that operate in autonomous mode during all the operating cycles of the machine.

Boundary

Something that indicates or fixes a limit or extent. For a robot, it is the outside, no-cross line of an operating area, transit path or zone, or exclusion area. Also called *perimeter*.

Bump Sensor

An electronic sensor used in detecting and recording physical touch. Also called *tactile sensor* or *touch sensor*.

Charging Station

An automatic battery-charging facility located on or within the working area.

Computer Vision

The way a robot “sees” the world around it, putting together the sensor data and the pictures it creates to respond to its environment.

Exclusion Zone

An area recorded by the operator that the robot shall not enter.

Fault

The result of a mechanical, sensor, or software error, which requires service or correction of the machine, sensor, or software code.

Job

The work being performed by a robot at one time inside an operating area.

Localization

The process of determining where a mobile robot is with respect to its environment. Localization is a most fundamental competency required by a robot as the knowledge of its location is necessary for making decisions about future actions.

Mowing Zone

An area in which the robot can run autonomously. The area inside a boundary. Operating may be interchangeable with adjectives that describe the work, such as mowing, clearing, and trenching.

Navigation

The ability of a robot to determine its own position in its frame of reference and then to plan a path toward some goal location.

Obstacle

An object or ground condition which can cause harm, or is harmed, if it comes into contact or collision with the machinery.

Obstacle Avoidance

The process of avoiding a collision with an obstacle in the path of a robot by maneuvering around the obstacle.

Obstacle Detection

The process of detecting objects or terrain types that impede the motion of a robot. A robot may use obstacle avoidance to maneuver around an obstacle.

Obstacle Sensor

A device that senses when the machine contacts a person or an obstruction.

Path

A route that a robot is programmed to travel. As part of a job, a path can connect multiple fields or paths.

Robot

A machine designed to execute one or more tasks automatically. For example, a robot can sense, compute, and act. It must be able to have sensors that provide it with input and insights about the physical space around them. It must be able to compute to make decisions based on its programming and inputs. To be defined as a robot, it must be able to move in or change the physical world in some manner.

Sensing

The feedback from the environment of the robot, which enables the robot to react to its environment. Sensory inputs may come from a variety of sensor types.

Sensor

A device that responds to physical stimuli (including, but not limited to, heat, light, sound, pressure, magnetism, and motion) and transmits the resulting signal or data providing a measurement, operating a control, or both. For example, a sensor can estimate the condition of a robot and its environment. This information is sent to a controller to enable the appropriate behavior. A robot requires extensive information about its environment to function effectively.

Transit Path

A non-mowing autonomous lane used only for the robot to travel from one mowing zone to another. An autonomous, exact path that passes through, across, or connects to another transit path, transit area, or operating area.

Working Area

Any defined area in which the machine can function automatically.

California Proposition 65 Warning Information

What is this warning?

You may see a product for sale that has a warning label like the following:

 **WARNING:** Cancer and Reproductive Harm—www.p65Warnings.ca.gov.

What is Prop 65?

Prop 65 applies to any company operating in California, selling products in California, or manufacturing products that may be sold in or brought into California. It mandates that the Governor of California maintain and publish a list of chemicals known to cause cancer, birth defects, and/or other reproductive harm. The list, which is updated annually, includes hundreds of chemicals found in many everyday items. The purpose of Prop 65 is to inform the public about exposure to these chemicals.

Prop 65 does not ban the sale of products containing these chemicals but instead requires warnings on any product, product packaging, or literature with the product. Moreover, a Prop 65 warning does not mean that a product is in violation of any product safety standards or requirements. In fact, the California government has clarified that a Prop 65 warning “is not the same as a regulatory decision that a product is ‘safe’ or ‘unsafe.’” Many of these chemicals have been used in everyday products for years without documented harm. For more information, go to https://oag.ca.gov/prop65/faqs-view-all.

A Prop 65 warning means that a company has either (1) evaluated the exposure and has concluded that it exceeds the “no significant risk level”; or (2) has chosen to provide a warning based on its understanding about the presence of a listed chemical without attempting to evaluate the exposure.

Does this law apply everywhere?

Prop 65 warnings are required under California law only. These warnings are seen throughout California in a wide range of settings, including but not limited to restaurants, grocery stores, hotels, schools, and hospitals, and on a wide variety of products. Additionally, some online and mail order retailers provide Prop 65 warnings on their websites or in catalogs.

How do the California warnings compare to federal limits?

Prop 65 standards are often more stringent than federal and international standards. There are various substances that require a Prop 65 warning at levels that are far lower than federal action limits. For example, the Prop 65 standard for warnings for lead is 0.5 µg/day, which is well below the federal and international standards.

Why don’t all similar products carry the warning?

- Products sold in California require Prop 65 labelling while similar products sold elsewhere do not.
- A company involved in a Prop 65 lawsuit reaching a settlement may be required to use Prop 65 warnings for its products, but other companies making similar products may have no such requirement.
- The enforcement of Prop 65 is inconsistent.
- Companies may elect not to provide warnings because they conclude that they are not required to do so under Prop 65; a lack of warnings for a product does not mean that the product is free of listed chemicals at similar levels.

Why does Toro include this warning?

Toro has chosen to provide consumers with as much information as possible so that they can make informed decisions about the products they buy and use. Toro provides warnings in certain cases based on its knowledge of the presence of one or more listed chemicals without evaluating the level of exposure, as not all the listed chemicals provide exposure limit requirements. While the exposure from Toro products may be negligible or well within the “no significant risk” range, out of an abundance of caution, Toro has elected to provide the Prop 65 warnings. Moreover, if Toro does not provide these warnings, it could be sued by the State of California or by private parties seeking to enforce Prop 65 and subject to substantial penalties.


TORO®