Form No. 3480-808 Rev A

TORO®

Count on it.

Parts Catalog

26in 8-Blade Cutting Unit

Greensmaster® 1026 Mower

Model No. 04842—Serial No. 420000000 and Up

Register at www.Toro.com.
Original Instructions (EN)

CE

3480-808 A

Ordering Replacement Parts

To order replacement parts, please supply the part number, the quantity, and the description of each part desired.

Understanding Reference Numbers

Each identified part in an illustration has a reference number. The reference number for a part also appears in the parts list, along with other information about the part.

This catalog uses two special reference number formats, one to indicate parts in a service assembly and another to indicate the quantity of a given part in an illustration.

Service Assembly Reference Numbers

Parts in service assemblies have reference numbers in the form a:b. The a represents the reference number of the entire service assembly and the b represents a sequential number unique to each part within the service assembly.

For example, a wheel assembly might be identified by reference number 6, the tire by 6:1, the valve by 6:2, and the wheel by 6:3. When you order the assembly identified by reference number 6, you receive all parts identified by reference numbers 6:1,6:2, and 6:3. However, you may also order any part individually. Reference numbers of this type appear in illustration and in parts lists.

Reference Numbers Indicating Quantity

In an illustration, if a reference number indicates more than one part, the reference number has the form nX y. The n represents the quantity of the part, the X is the multiplication symbol, and the y represents the reference number.

For example, in an illustration, the reference number 2X 37 means that two of the parts identified by reference number 37 are indicated.

Contents

Side Plate and Grass Shield Assembly 4
Reel and Bedknife Assembly 5
Reel Drive Box and Weight Assembly 6
Reel Drive Assembly No. 138-1611 7
Optional Front Roller Assemblies 8
Full Front Roller Assembly No. 147-1203 9
Wide Roller Assembly No. 147-1200 10
Lace Narrow Wiehle Roller Assembly No. 147-1193 11
Extended Lace Narrow Wiehle Roller Assembly No. 147-1196 12
Attachments and Accessories 13

© 2026—The Toro® Company
8111 Lyndale Avenue South
Bloomington, MN 55420

Contact us at www.Toro.com.
Printed in the USA.
All Rights Reserved

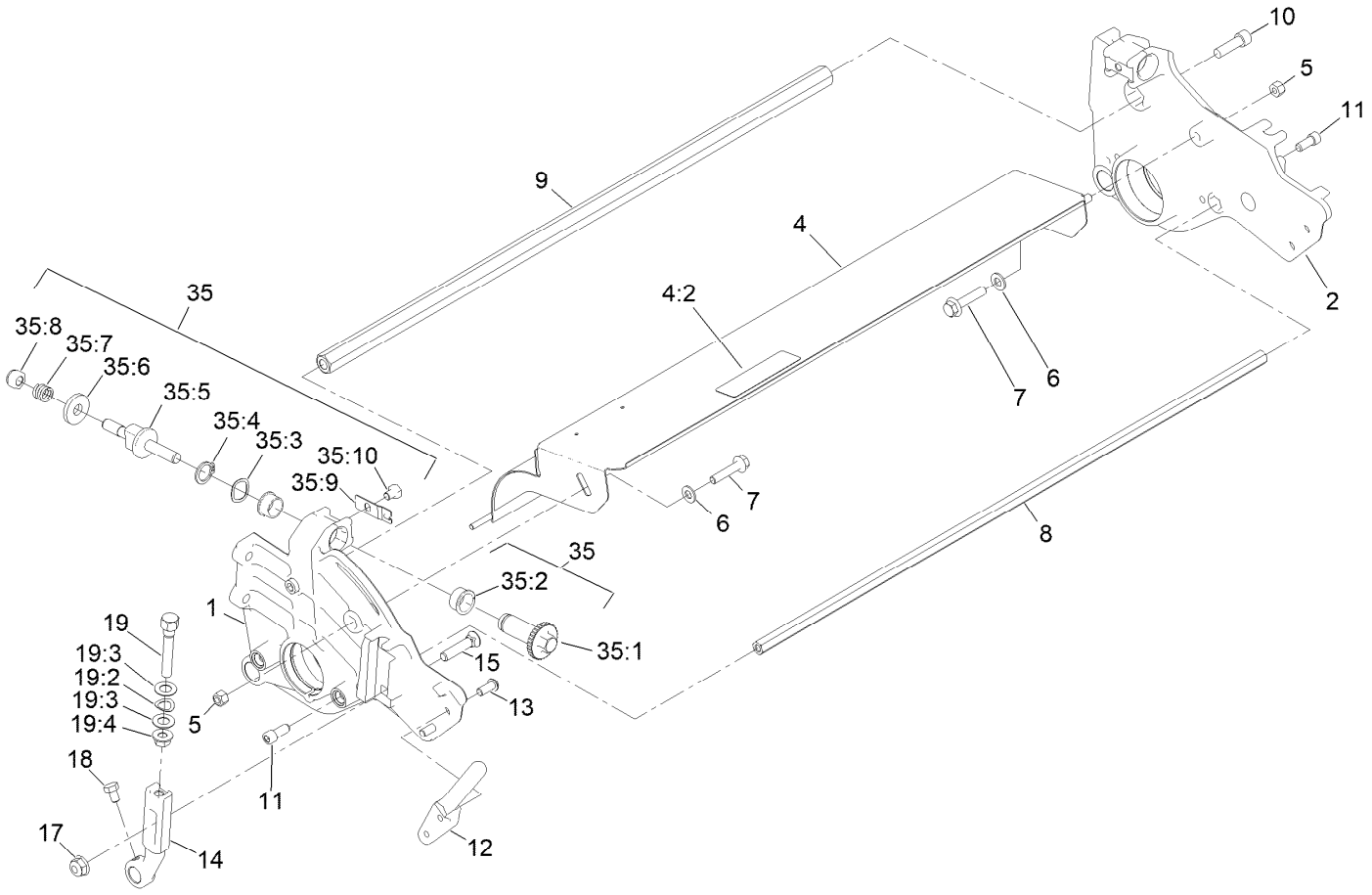

Side Plate and Grass Shield Assembly

Ref.	Part Number	Qty.	Description
1	147-2281	1	Plate-Side, RH (Machined)
2	147-2282	1	Plate-Side, LH (Machined)
4	139-4378	1	Grass Shield ASM
4:2	137-9706	1	Decal-Warning
5	3296-29	2	Nut-Lock, NI
6	3256-23	2	Washer-Plain
7	115-1794	2	Screw-HHF
8	138-1552	1	Rod-Frame
9	138-1551	1	Rod-Frame
10	3274-1	2	Screw-HSH
11	100-2401	2	Screw-HSH
12	65-8570	2	Rod-Mounting
13	3274-55	4	Screw-HSBH
14	137-0327	2	Arm-HOC
15	99-3773	2	Bolt-Plow
17	133-7570	2	Nut-Flange, NI

Ref.	Part Number	Qty.	Description
18	322-1	2	Screw-HH
19	138-1530	2	HOC Screw ASM
19:2	138-1642	1	Washer-Spring
19:3	138-1538	2	Washer-Special
19:4	127-6852	1	Nut-Flange, Lock
35	121-2637	1	DPA Rebuild Kit
35:1	106-5363	2	Shaft-Adjuster
35:2	106-5344	4	Bushing-Flange, Keyed
35:3	119-4164	2	Washer-Wave
35:4	32120-93	2	Ring-Retaining
35:5	137-6130	2	Screw-Adjuster, Bedbar
35:6	119-4155	2	Washer-Hardened
35:7	119-4156	2	Spring-Compression
35:8	119-4039	2	Nut-Hex
35:9	99-2097	2	Detent
35:10	119-4067	2	Screw-HH

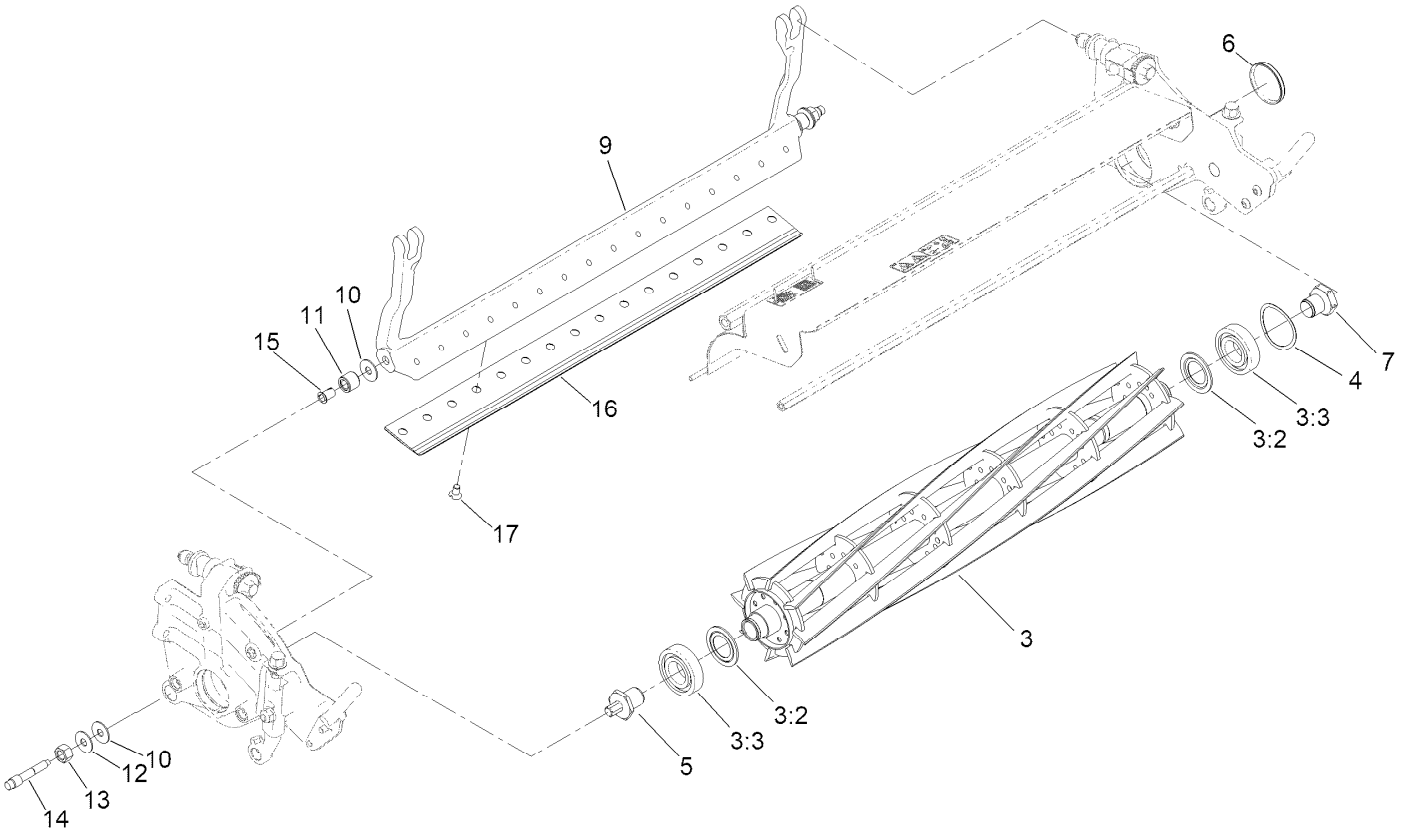

Reel and Bedknife Assembly

Ref.	Part Number	Qty.	Description
3	138-5753	1	8 Bld LD ES Reel+ ASM (26)
3:2	115-3299	2	Seal-Flocked
3:3	140-5510	2	Bearing-Sealed, Stainless
4	115-5258	1	Spring-Wire, Flat
5	147-1310	1	Insert-Splined, Threaded (RH)
6	137-0325	1	Plug-Expansion
7	137-0326	1	Screw-Lock, Bearing
9	138-1522-01	1	Bedbar
10	52-2900	4	Washer-Plastic
11	119-4153	2	Rubber Bushing ASM
12	119-4150	2	Washer-Flat
13	140-9234	2	Nut-Hex Lock
14	117-9493	2	Bolt-Bedbar

Ref.	Part Number	Qty.	Description
15	52-2890	2	Bushing-Nylon
16	104-2646	1	Bedknife-Highcut ●
16	107-8181	1	Bedknife-Fairway ●
16	112-9275	1	Bedknife-Microcut ●
16	117-1548	1	Bedknife-Edgemax Tournament
16	139-4322	1	Bedknife-Edgemax, Microcut Short ●
16	139-4323	1	Bedknife-Edgemax, Tournament Short ●
16	139-4324	1	Bedknife-Edgemax, 26" Microcut ●
16	93-9015	1	Bedknife-Lowcut ●
16	94-5885	1	Bedknife-Tournament ●
17	119-4151	16	Screw-Bedknife

● Optional Equipment

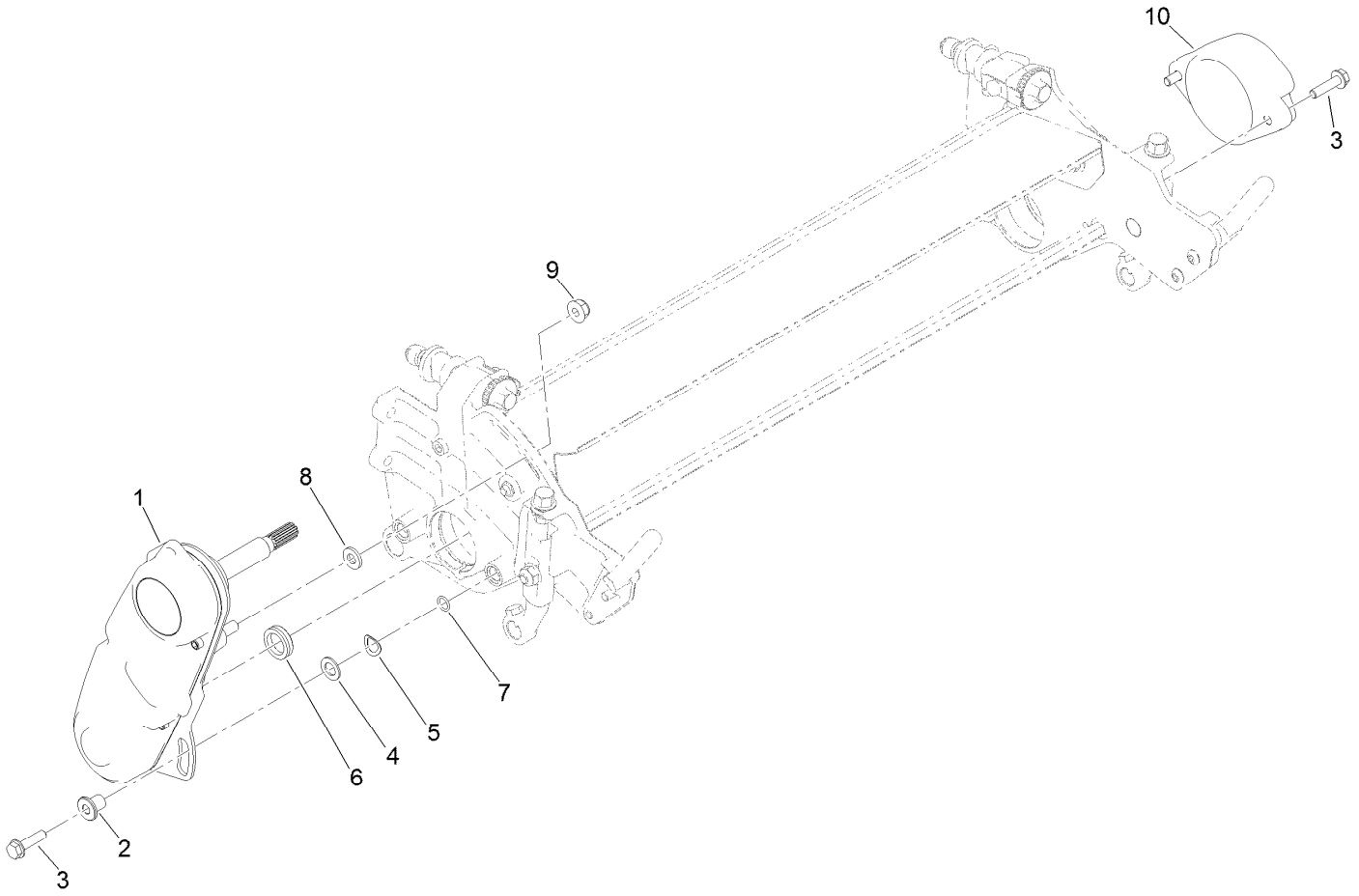

Reel Drive Box and Weight Assembly

Ref.	*Part Number*	*Qty.*	*Description*
1	138-1611	1	Reel Drive ASM
2	71-4411	2	Spacer
3	112-6913	4	Screw-HF
4	100-7336	2	Washer
5	138-1642	2	Washer-Spring
6	138-1549	1	Seal
7	360-0494	2	O-Ring
8	115-7293	1	Washer-Hardened
9	133-7570	1	Nut-Flange, NI
10	138-1633-03	1	Weight

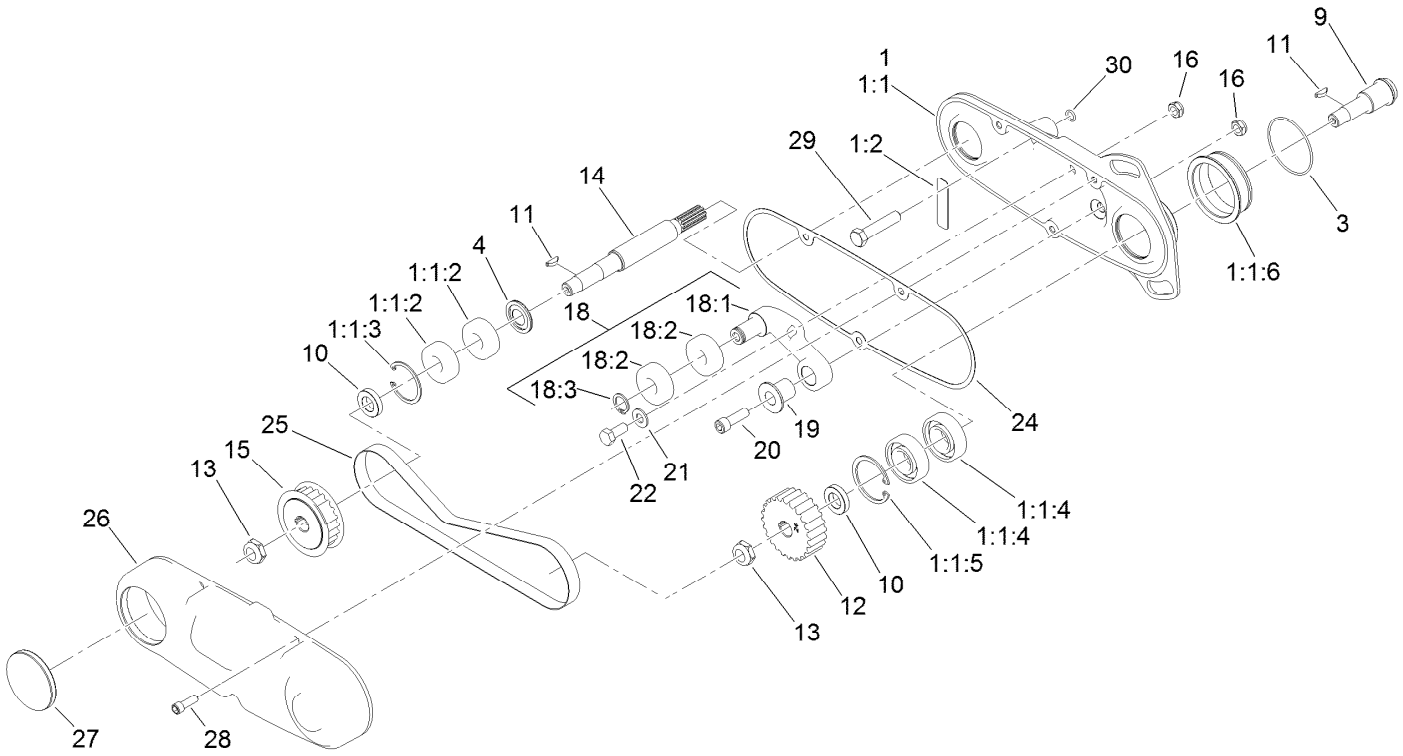

Reel Drive Assembly No. 138-1611

Ref.	Part Number	Qty.	Description
1	139-4300	1	Reel Drive Housing ASM
1:1		1	Housing ASM ●
1:1:2	115-6869	2	Bearing-Ball, Stainless
1:1:3	32151-34	1	Ring-Retaining
1:1:4	117-6831	2	Bearing-Ball, Stainless
1:1:5	107-3512	1	Ring-Snap, Internal
1:1:6	132-4588	1	Sleeve-Pivot
1:2	120-9570	1	Decal-Warning
3	360-0398	1	O-Ring
4	115-6923	1	Shield-Bearing, Flocked
9	133-9154	1	Shaft-Reel, Driven
10	133-9155	2	Spacer-Pulley, Reel
11	937218	2	Key-Hipro
12	121-4724	1	Pulley-Reel, 24 Tooth
13	3296-45	2	Nut-Hex
14	138-1614	1	Shaft-Drive, Reel
15	121-4722	1	Pulley-Reel, 22 Tooth

Ref.	Part Number	Qty.	Description
16	3296-47	2	Nut-Lock,NI
18		1	Idler ASM ●
18:1	133-9152	1	Idler Arm
18:2	115-6869	2	Bearing-Ball, Stainless
18:3	115-6755	1	Ring-Retaining
19	131-1847	1	Bushing-Idler
20	3274-22	1	Screw-HSH
21	3256-23	1	Washer-Plain
22	322-3	1	Screw-HH
24	132-4590	1	Gasket-Reel Drive
25	140-9348	1	Belt-Reel, 75T
26	133-9161	1	Cover-Drive, Reel
27	137-0325	1	Plug-Expansion
28	3274-8	3	Screw-HSH
29	323-9	1	Screw-HH
30	237-21	1	O-Ring

● Not serviced separately

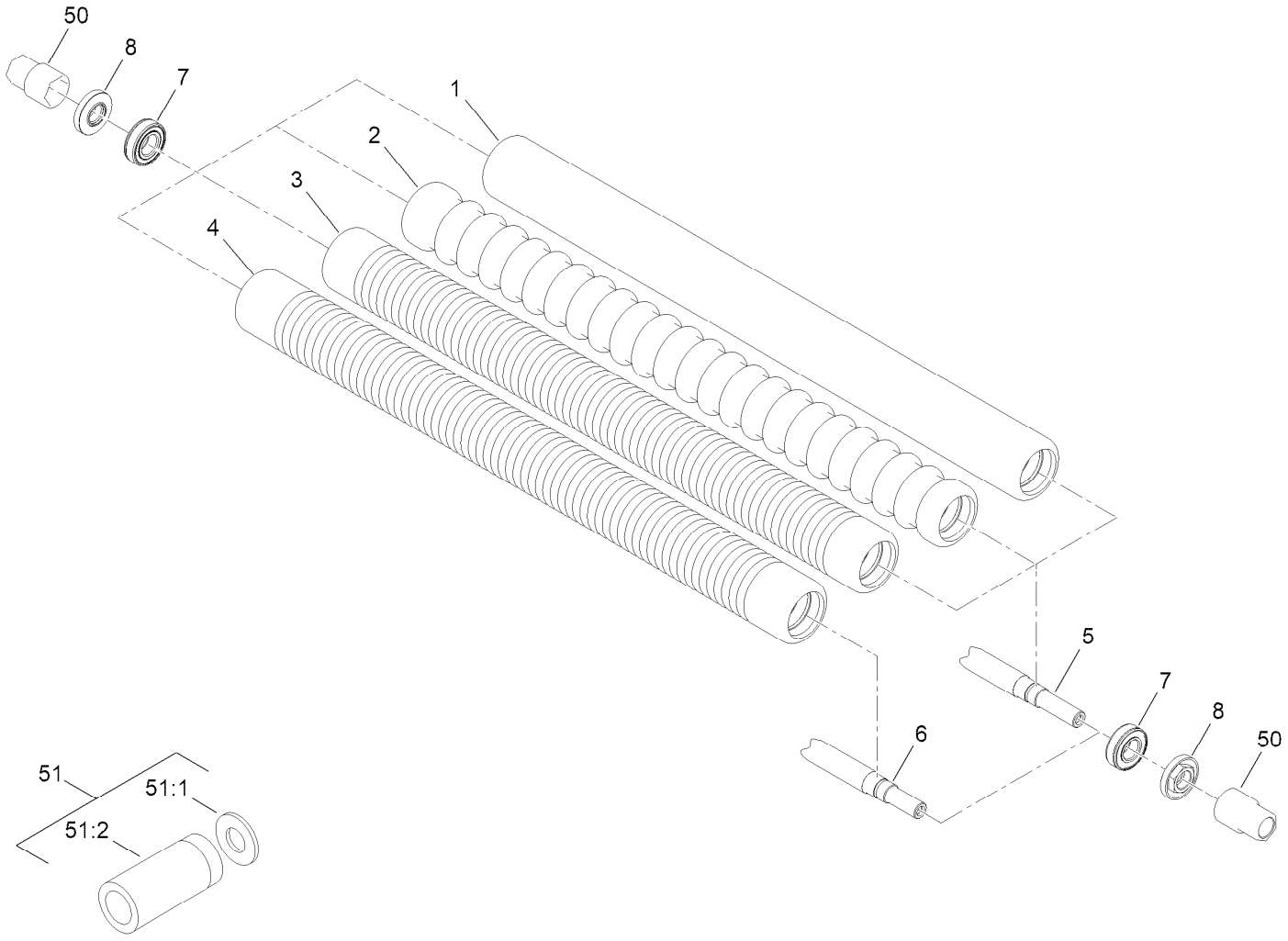

Optional Front Roller Assemblies

Ref.	*Part Number*	*Qty.*	*Description*
1	147-1203	1	GR26 Full Front Roller ASM
2	147-1200	1	GR26 Wide Wiehle Roller ASM
3	147-1193	1	GR26 Lace Narrow Wiehle Roller ASM
4	147-1196	1	GR26 EXT Lace Nar Wiehle Roller ASM
5	147-1348	1	Shaft-Roller (26In, Int)
6	147-1349	1	Shaft-Roller (26In, EXT-Int)
7	147-1500	2	Bearing-Ball ■
8	147-0702	2	Nut-Bearing Lock
50	147-1132	2	Tool-Drive, Roller Nut ●
51	140-5553	2	GR Roller Rebuild Tool Kit ●
51:1	107-8133	1	Washer-Flat
51:2	115-0853	1	Tool-Bearing/Outer Seal

● Optional Service Tool

■ Red Seal on bearing must face outside of tube

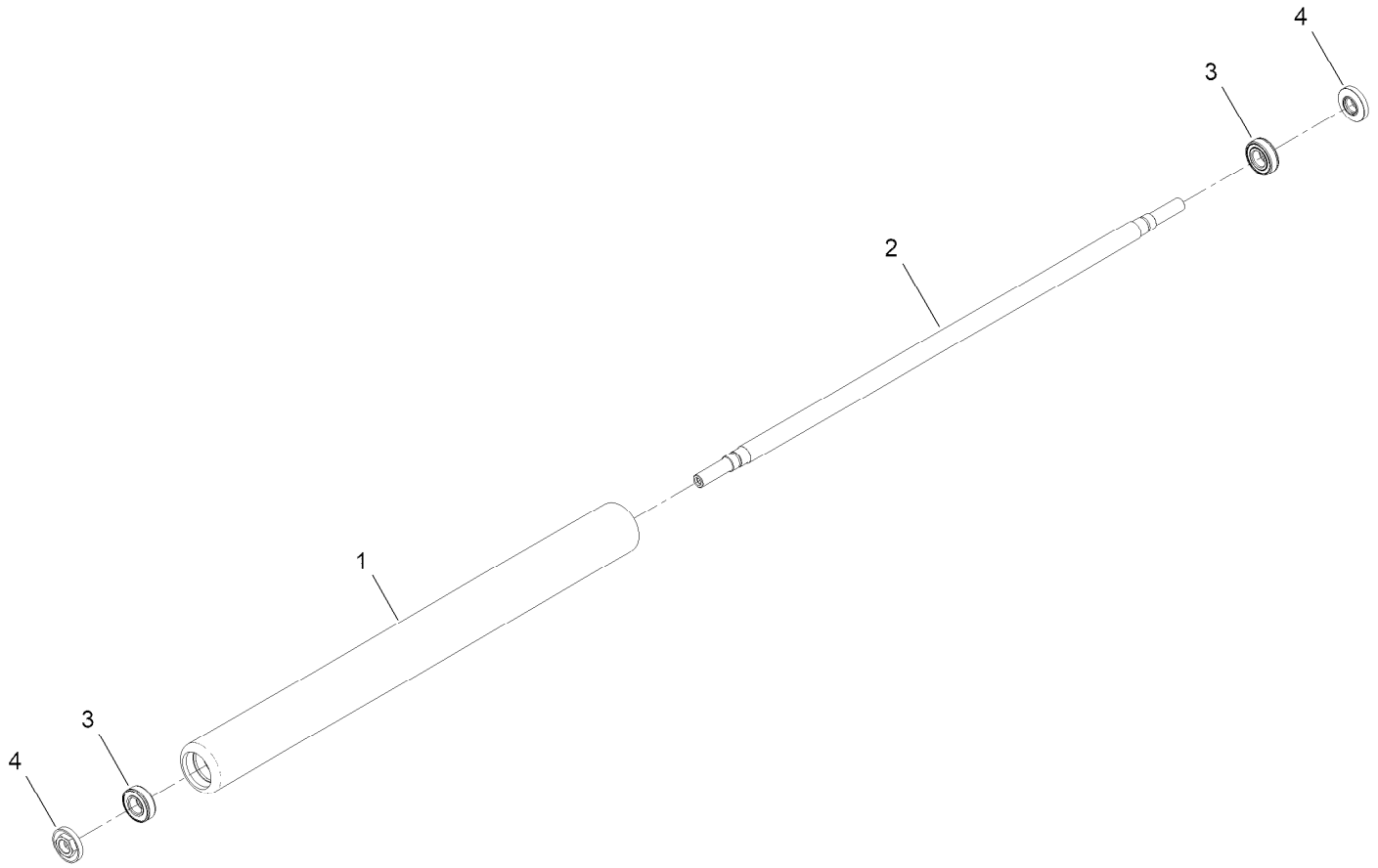

Full Front Roller Assembly No. 147-1203

Ref.	*Part Number*	*Qty.*	*Description*
1	147-1201	1	Tube-Roller, 2.5In Full(26In,Al,LD)
2	147-1348	1	Shaft-Roller (26In, Int)
3	147-1500	2	Bearing-Ball ●
4	147-0702	2	Nut-Bearing Lock

● Red Seal on bearing must face outside of tube

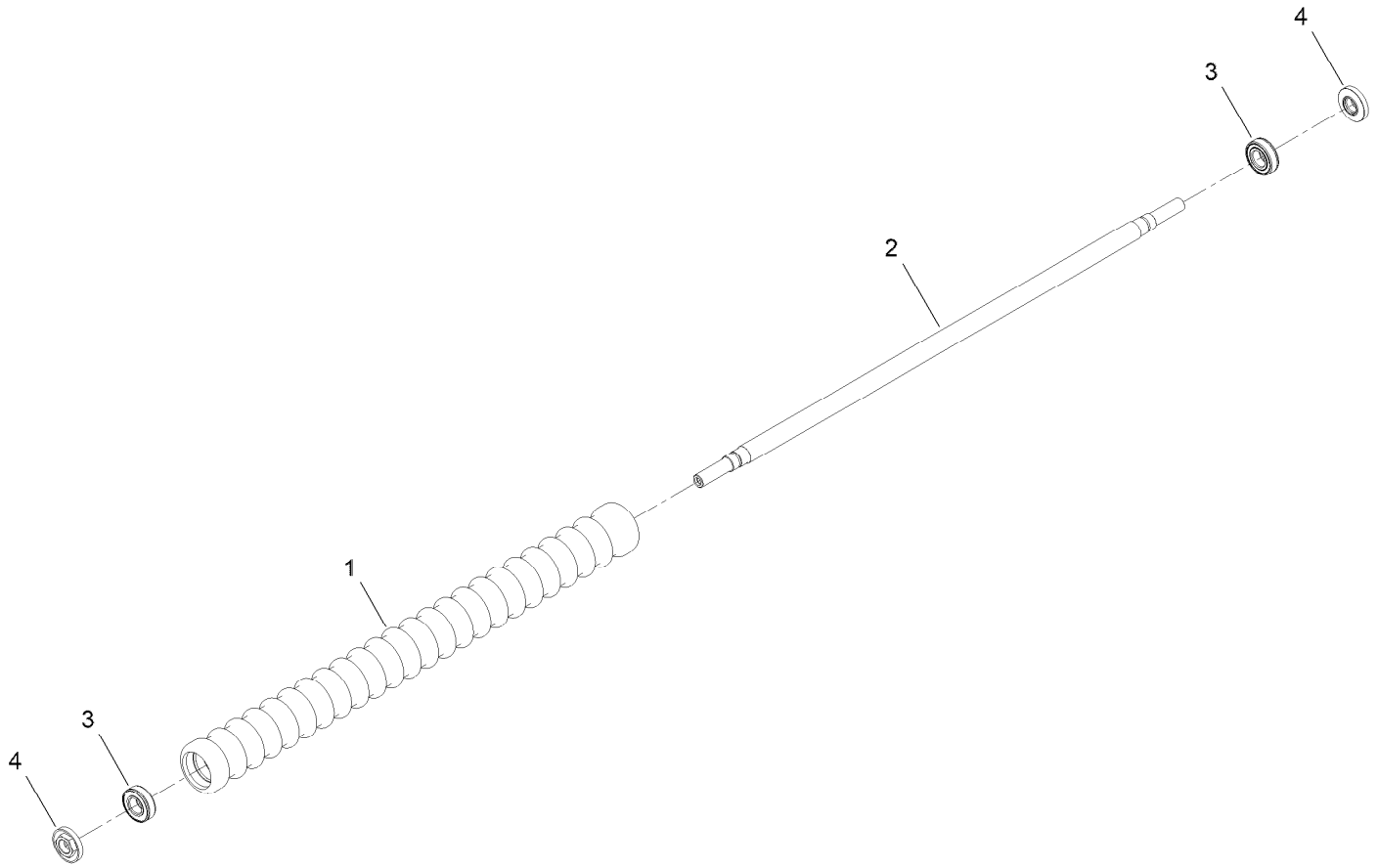

Wide Roller Assembly No. 147-1200

Ref.	*Part Number*	*Qty.*	*Description*
1	147-1198	1	Tube-Roller, Wide Wiehle(26In,LD)
2	147-1348	1	Shaft-Roller (26In, Int)
3	147-1500	2	Bearing-Ball ●
4	147-0702	2	Nut-Bearing Lock

● Red Seal on bearing must face outside of tube

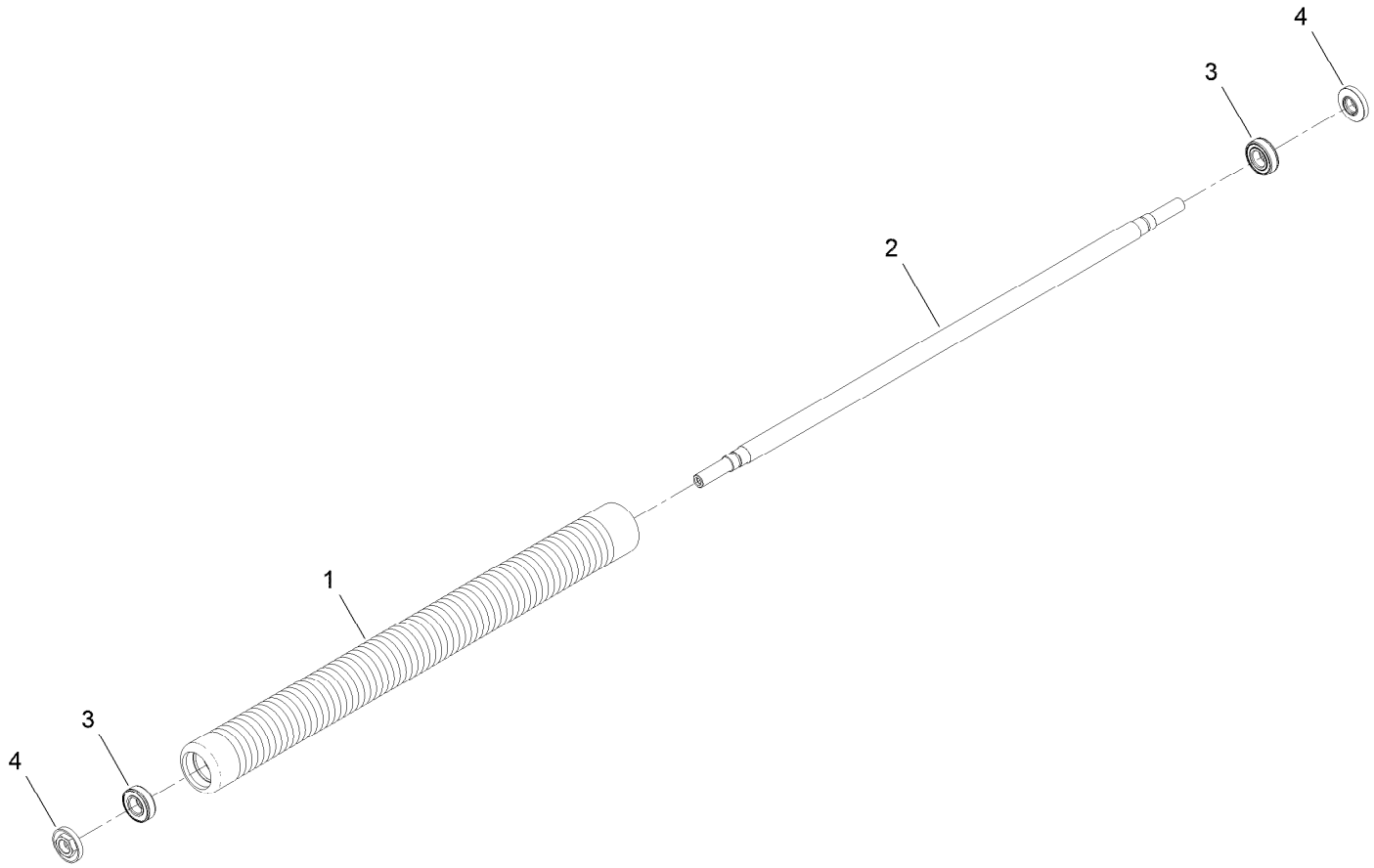

Lace Narrow Wiehle Roller Assembly No. 147-1193

Ref.	*Part Number*	*Qty.*	*Description*
1	147-1191	1	Tube-Roller,Lace Narrow Wiehle(26In,LD)
2	147-1348	1	Shaft-Roller (26In, Int)
3	147-1500	2	Bearing-Ball ●
4	147-0702	2	Nut-Bearing Lock

● Red Seal on bearing must face outside of tube

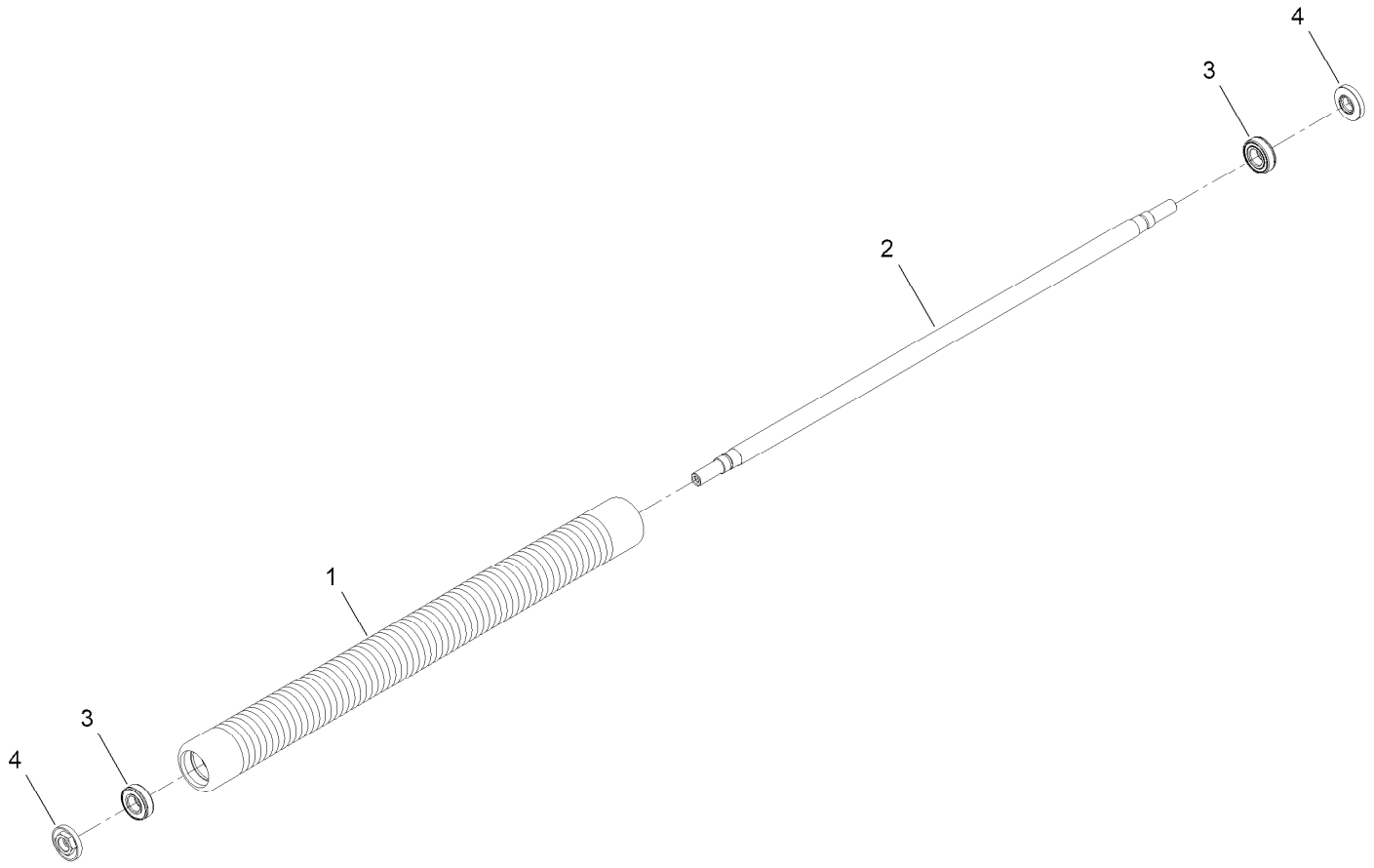

Extended Lace Narrow Wiehle Roller Assembly No. 147-1196

Ref.	*Part Number*	*Qty.*	*Description*
1	147-1194	1	Tube-Roller,EXT Lace Wiehle(26In,LD)
2	147-1349	1	Shaft-Roller (26In, EXT-Int)
3	147-1500	2	Bearing-Ball ●
4	147-0702	2	Nut-Bearing Lock

● Red Seal on bearing must face outside of tube

Attachments and Accessories

For 04842 — 26in 8-Blade Cutting Unit Greensmaster 1026 Mower

Product Name	Model/Part
GR26 Interlace Narrow Wiehle Roller ASM	04076
GR26 Extended Lace Narrow Wiehle Roller ASM	04077
GR26 Wide Wiehle Roller ASM	04078
GR26 Full Front Roller ASM (2.5in Aluminum)	04079
26in Stiff Grooming Brush	04276
Turf Evaluator	04399
Universal Groomer Drive	04707
26in Twin Tip Groomer Reel	04803
Bedknife-Highcut	104-2646
Bedknife-Fairway	107-8181
Premium All Purpose Grease (Tube)	108-1190
Paint-Black Bottle	112-0176
Paint-Red Bottle	112-0178
Bedknife-Micro-Cut	112-9275
Roller Extension Kit	115-7361
Bedknife-EDGEMAX, Tournament Cut	117-1548
MVP Kit-Cutting Unit Re-Build	121-2637
Toro Reel Paper (10 Pack)	125-5610
26in Stiff Grooming Brush Kit	127-1549
Angle Indicator	131-6828
Angle Indicator Mount	131-6829
Tool-Syringe	137-0872
Tool-Drive Shaft Removal	137-0920
Bedbar-26in	138-1522-01
Bedknife-EDGEMAX, 26in Microcut Short	139-4322
Bedknife-EDGEMAX, 26in Tournament Short	139-4323
Bedknife-EDGEMAX, 26in Microcut	139-4324
26in Interlaced Roller Scraper Asm	139-4394
26in Full Roller Scraper Asm	139-4398
26in Smooth Roller Scraper Brush Asm	139-5117
26in Interlaced Roller Scraper Brush Asm	139-5125
26in Wide Wiehle Roller Scraper Asm	139-7406
Wide Wiehle Roller Scraper Brush Asm	139-7410
Shim-Toro Reel (.002in)	140-5531
Blade-GR Groomer, Twin Tip (0.032in)	140-5580
Blade-GR Groomer, Helix (0.028in)	140-5581
Blade-GR Groomer, Helix (0.015in)	140-5582
Tool-Drive, Roller Nut	147-1132
GR26 Lace Narrow Wiehle Roller ASM	147-1193
GR26 Extended Lace Nar Wiehle Roller ASM	147-1196
GR26 Wide Wiehle Roller ASM	147-1200
GR26 Full Front Roller ASM	147-1203
Toro Red 12oz Aerosol Can	361-10
New Red Paint - Gallon	361-11
Semi-Gloss Black Spray Paint	361-9
Bedknife-1/8in	93-9015

Attachments and Accessories (continued)

Bedknife-Tournament Cut	94-5885
Height-of-Cut Bar	94-9010
Extended HOC Arm	99-4286

Notes:



Count on it.